PC / AT COMPATIBLE CHIP-SET SL600X

SL6001/SL6002/SL6003/SL6004/SL6005

994858 (994859) 994861 994862

PRELIMINARY

FEATURES

- 100% compatible with IBM™ PC AT
- Pin-to-pin compatible with Chips & Technology's chip-set
- Support 10 MHz with zero Wait State or 12 MHz with one Wait State
- Configurable RAM select (64K, 128K, 256K or 1Mb DRAM)
- Early ALE, RAS generation
- Special Early Command Generation Option for 12 MHz Operation
- Variable Wait State selection
- Compatible with Intel 80286
- Refresh control Signal Generation
- Logic to convert 16 bit Data into 8 bit
- 24 mA sink current output Buffers
- SL6001 and SL6002 implemented in CMOS
- SL6003, SL6004 & SL6005 utilize Advanced Low Power Schottky

DESCRIPTION

The SL600X PC/AT chip-set consists of 5 VLSI chips implementing most of the random logic used in the IBM Personal Computer AT. It is pin-to-pin compatible with Chips and Technology's chip-set and offers higher performance and new features not available in the existing design. The SL600X allows the use of 120 ns DRAMs in a 8 MHz zero wait state system, 100 ns DRAMs in a 10 MHz zero wait state system or 120 ns DRAMs in a 12 MHz one wait state system. This chip-set can replace over 70 SSI/MSI devices in the current PC AT design.

The SL6001 and SL6002 have been implemented using high speed, low power CMOS process technology and perform system control and memory decode functions. Major blocks of the SL6001 include Intel's 82284 Clock Generator and Ready Interface logic, 82288 Bus Controller, 8284A Clock Generator and Driver, data conversion logic and numerical processor interface logic.

The SL6003, SL6004 and SL6005 have been implemented using Advanced Schottky Bipolar process technology. These devices include most of the buffers and drivers required in an IBM PC/AT compatible design. The output buffers are capable of driving high capacitive loads without degradation of performance and can sink 24 mA current at TTL levels.

VLSI implementation of these devices results in a very powerful, high performance, reduced size and low cost PC / AT system design. Existing PC / AT designs can be enhanced by utilizing additional features such as higher memory addressing capability offered by the SL600X chip-set while maintaining full compatibility with current software and hardware.

DEVICE TYPE	TECHNOLOGY	PACKAGE
SL6001	CMOS	84PLCC
SL6002	CMOS	48PDIP
SL6003	BIPOLAR	68PLCC
SL6004	BIPOLAR	68PLCC
SL6005	BIPOLAR	68PLCC

LOGICSTAR Inc. (415) 651-2796
4160-B Technology Dr.
Fremont CA 94538

224 okig

005119

5119 LGS

This Material Copyrighted By Its Respective Manufacturer

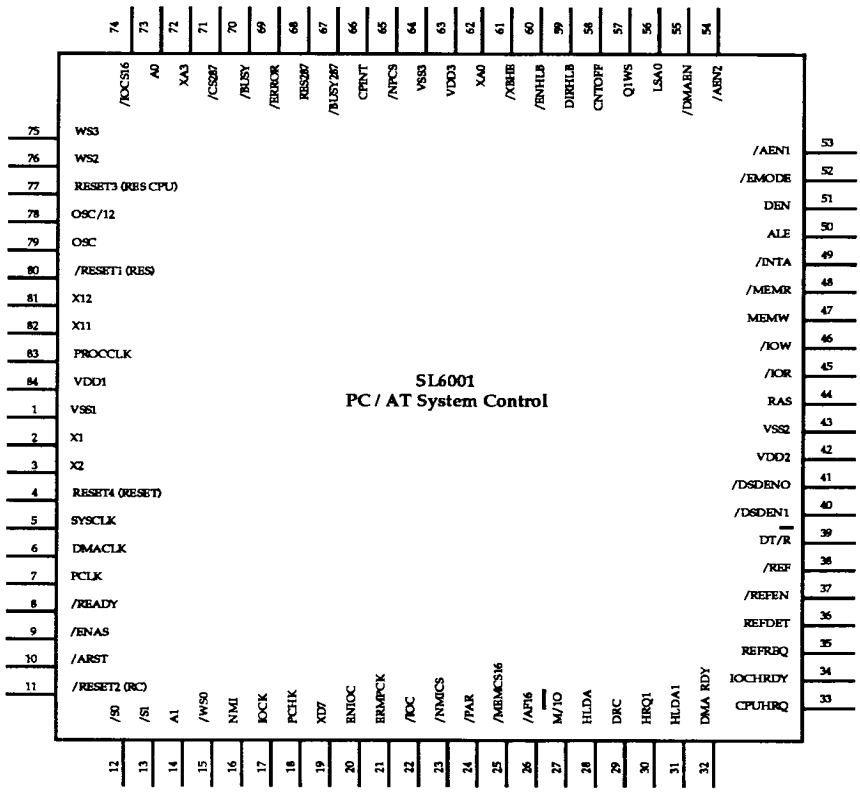

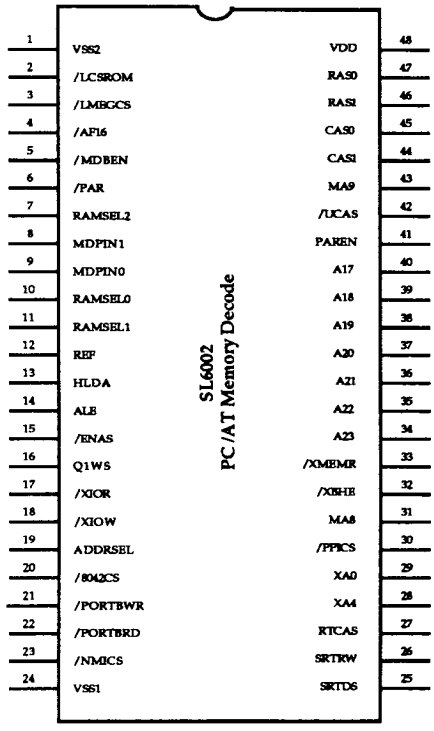

This Material Copyrighted By Its Respective Manufacturer

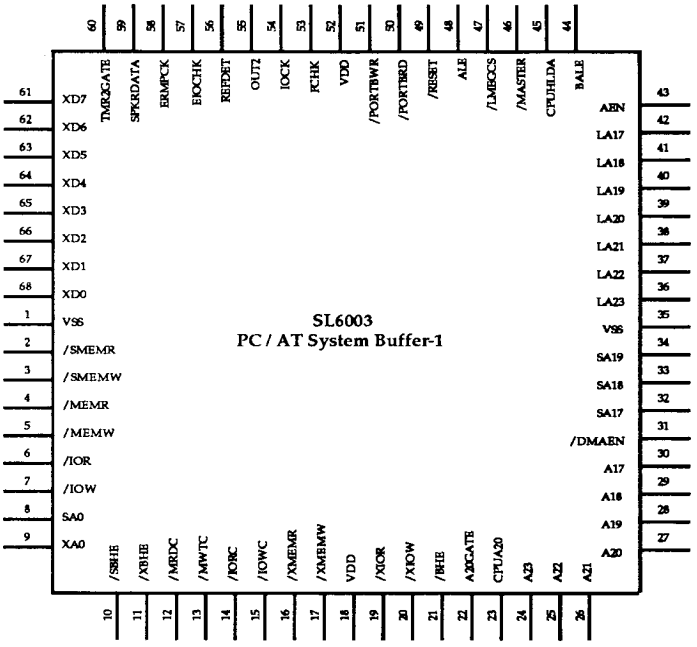

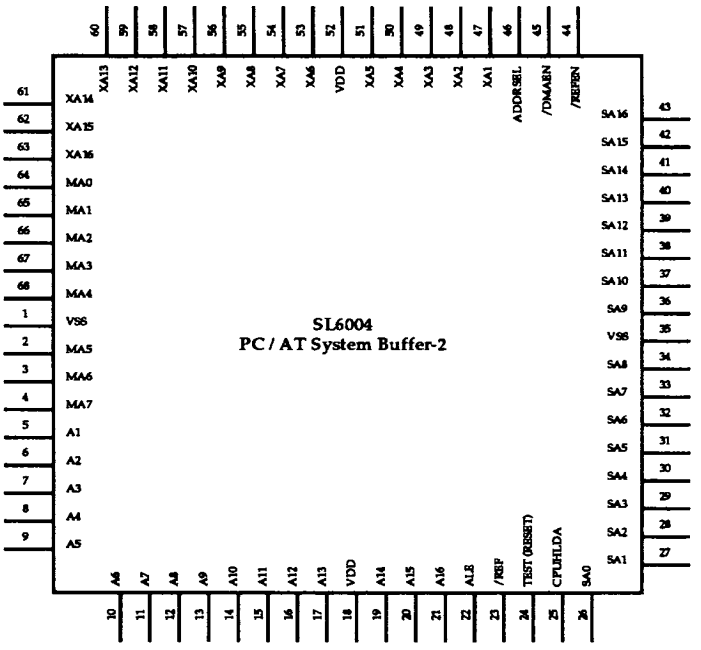

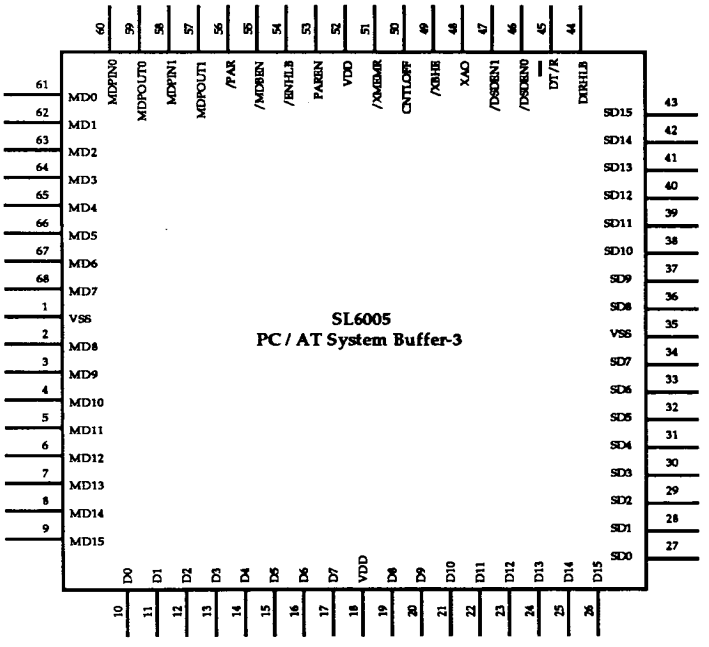

This Material Copyrighted By Its Respective Manufacturer

PC / AT BLOCK DIAGRAM

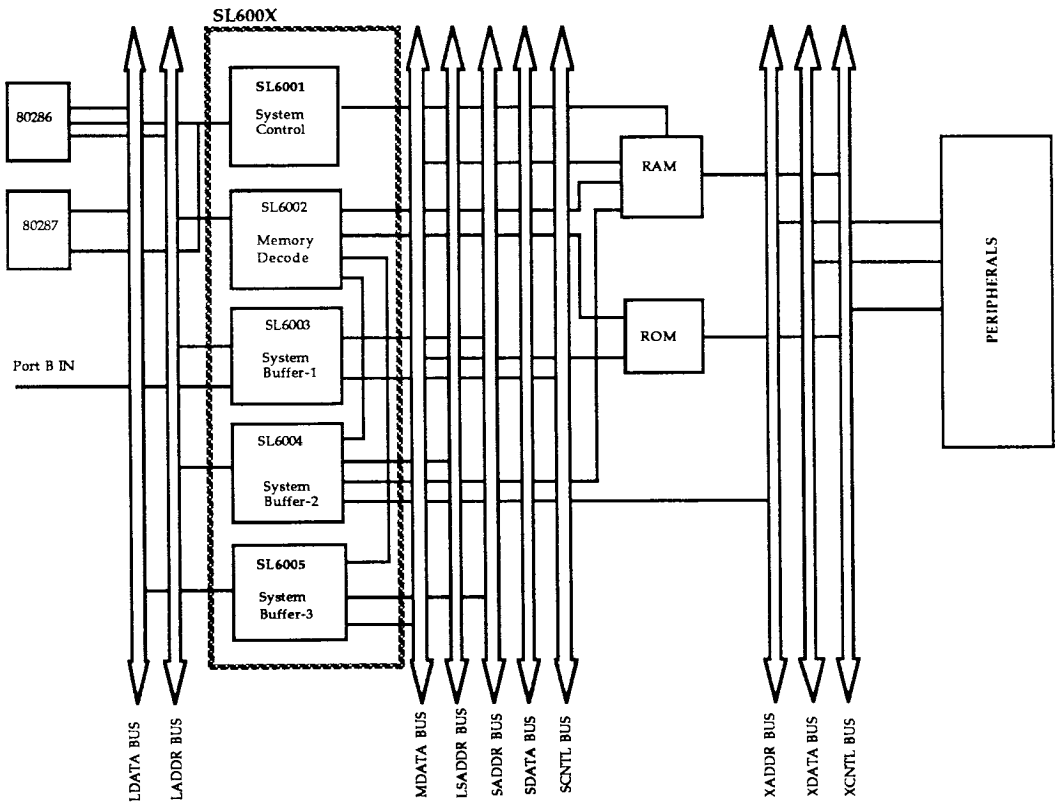

ORDERING INFORMATION

SL600X XX X

Device Type:
0 - Chip-set including SL6001/SL6002/SL6003/SL6004/SL6005

Package Type:
PD - Plastic DIP
PL - Plastic LCC

Temperature Range:
C- Commercial temperature range, 0 to 70 °C, 4.75 to 5.25 V

IBM, AT are the trademarks of International Business Machines.
Intel is a trademark of Intel Corporation.

LS0011DS01

LOGICSTAR reserve the right to make changes in specifications at any time without notice. The information furnished by LOGICSTAR in this publication is believed to be accurate and reliable. However, no responsibility is assumed by LOGICSTAR for its use; nor for any infringements of patents or other rights of third parties resulting from its use.

July 1987

LOGICSTAR Inc. (415) 651-2..
4160-B Technology Dr
Fremont CA 9453.

This Material Copyrighted By Its Respective Manufacturer