Intel® 64 and IA-32 Architectures Software Developer's Manual

Volume 3 (3A, 3B, 3C & 3D): System Programming Guide

NOTE: The Intel 64 and IA-32 Architectures Software Developer's Manual consists of four volumes: *Basic Architecture*, Order Number 253665; *Instruction Set Reference A-Z*, Order Number 325383; *System Programming Guide*, Order Number 325384; *Model-Specific Registers,* Order Number 335592. Refer to all four volumes when evaluating your design needs.

Order Number: 325384-078US
December 2022

Notices & Disclaimers

Intel technologies may require enabled hardware, software or service activation.

No product or component can be absolutely secure.

Your costs and results may vary.

You may not use or facilitate the use of this document in connection with any infringement or other legal analysis concerning Intel products described herein. You agree to grant Intel a non-exclusive, royalty-free license to any patent claim thereafter drafted which includes subject matter disclosed herein.

All product plans and roadmaps are subject to change without notice.

The products described may contain design defects or errors known as errata which may cause the product to deviate from published specifications. Current characterized errata are available on request.

Intel disclaims all express and implied warranties, including without limitation, the implied warranties of merchantability, fitness for a particular purpose, and non-infringement, as well as any warranty arising from course of performance, course of dealing, or usage in trade.

Code names are used by Intel to identify products, technologies, or services that are in development and not publicly available. These are not “commercial” names and not intended to function as trademarks.

No license (express or implied, by estoppel or otherwise) to any intellectual property rights is granted by this document, with the sole exception that a) you may publish an unmodified copy and b) code included in this document is licensed subject to the Zero-Clause BSD open source license (0BSD), https://opensource.org/licenses/0BSD. You may create software implementations based on this document and in compliance with the foregoing that are intended to execute on the Intel product(s) referenced in this document. No rights are granted to create modifications or derivatives of this document.

© Intel Corporation. Intel, the Intel logo, and other Intel marks are trademarks of Intel Corporation or its subsidiaries. Other names and brands may be claimed as the property of others.

CONTENTS

PAGE

CHAPTER 1
ABOUT THIS MANUAL

1.1 INTEL® 64 AND IA-32 PROCESSORS COVERED IN THIS MANUAL 1-1
1.2 OVERVIEW OF THE SYSTEM PROGRAMMING GUIDE 1-4
1.3 NOTATIONAL CONVENTIONS 1-7
1.3.1 Bit and Byte Order 1-7
1.3.2 Reserved Bits and Software Compatibility 1-7
1.3.3 Instruction Operands 1-8
1.3.4 Hexadecimal and Binary Numbers 1-8
1.3.5 Segmented Addressing 1-8
1.3.6 Syntax for CPUID, CR, and MSR Values 1-9
1.3.7 Exceptions 1-9
1.4 RELATED LITERATURE 1-10

CHAPTER 2
SYSTEM ARCHITECTURE OVERVIEW

2.1 OVERVIEW OF THE SYSTEM-LEVEL ARCHITECTURE 2-1
2.1.1 Global and Local Descriptor Tables 2-3
2.1.1.1 Global and Local Descriptor Tables in IA-32e Mode 2-4
2.1.2 System Segments, Segment Descriptors, and Gates 2-4
2.1.2.1 Gates in IA-32e Mode 2-4
2.1.3 Task-State Segments and Task Gates 2-5
2.1.3.1 Task-State Segments in IA-32e Mode 2-5
2.1.4 Interrupt and Exception Handling 2-5
2.1.4.1 Interrupt and Exception Handling IA-32e Mode 2-5
2.1.5 Memory Management 2-6
2.1.5.1 Memory Management in IA-32e Mode 2-6
2.1.6 System Registers 2-6
2.1.6.1 System Registers in IA-32e Mode 2-7
2.1.7 Other System Resources 2-7
2.2 MODES OF OPERATION 2-7
2.2.1 Extended Feature Enable Register 2-9
2.3 SYSTEM FLAGS AND FIELDS IN THE EFLAGS REGISTER 2-9
2.3.1 System Flags and Fields in IA-32e Mode 2-11
2.4 MEMORY-MANAGEMENT REGISTERS 2-11
2.4.1 Global Descriptor Table Register (GDTR) 2-12
2.4.2 Local Descriptor Table Register (LDTR) 2-12
2.4.3 IDTR Interrupt Descriptor Table Register 2-12
2.4.4 Task Register (TR) 2-13
2.5 CONTROL REGISTERS 2-13
2.5.1 CPUID Qualification of Control Register Flags 2-20
2.6 EXTENDED CONTROL REGISTERS (INCLUDING XCR0) 2-20
2.7 PROTECTION-KEY RIGHTS REGISTERS (PKRU AND IA32_PKRS) 2-22
2.8 SYSTEM INSTRUCTION SUMMARY 2-23
2.8.1 Loading and Storing System Registers 2-24
2.8.2 Verifying of Access Privileges 2-24
2.8.3 Loading and Storing Debug Registers 2-25
2.8.4 Invalidating Caches and TLBs 2-25
2.8.5 Controlling the Processor 2-26
2.8.6 Reading Performance-Monitoring and Time-Stamp Counters 2-26
2.8.6.1 Reading Counters in 64-Bit Mode 2-27
2.8.7 Reading and Writing Model-Specific Registers 2-27
2.8.7.1 Reading and Writing Model-Specific Registers in 64-Bit Mode 2-27
2.8.8 Enabling Processor Extended States 2-27

PAGE

CHAPTER 3
PROTECTED-MODE MEMORY MANAGEMENT

3.1 MEMORY MANAGEMENT OVERVIEW . . . 3-1
3.2 USING SEGMENTS . . . 3-2
3.2.1 Basic Flat Model . . . 3-3
3.2.2 Protected Flat Model . . . 3-3
3.2.3 Multi-Segment Model . . . 3-4
3.2.4 Segmentation in IA-32e Mode . . . 3-5
3.2.5 Paging and Segmentation . . . 3-5
3.3 PHYSICAL ADDRESS SPACE . . . 3-6
3.3.1 Intel® 64 Processors and Physical Address Space . . . 3-6
3.4 LOGICAL AND LINEAR ADDRESSES . . . 3-6
3.4.1 Logical Address Translation in IA-32e Mode . . . 3-7
3.4.2 Segment Selectors . . . 3-7
3.4.3 Segment Registers . . . 3-8
3.4.4 Segment Loading Instructions in IA-32e Mode . . . 3-9
3.4.5 Segment Descriptors . . . 3-9
3.4.5.1 Code- and Data-Segment Descriptor Types . . . 3-12
3.5 SYSTEM DESCRIPTOR TYPES . . . 3-13
3.5.1 Segment Descriptor Tables . . . 3-14
3.5.2 Segment Descriptor Tables in IA-32e Mode . . . 3-16

CHAPTER 4
PAGING

4.1 PAGING MODES AND CONTROL BITS . . . 4-1
4.1.1 Four Paging Modes . . . 4-1
4.1.2 Paging-Mode Enabling . . . 4-3
4.1.3 Paging-Mode Modifiers . . . 4-4
4.1.4 Enumeration of Paging Features by CPUID . . . 4-5
4.2 HIERARCHICAL PAGING STRUCTURES: AN OVERVIEW . . . 4-7
4.3 32-BIT PAGING . . . 4-9
4.4 PAE PAGING . . . 4-14
4.4.1 PDPTE Registers . . . 4-14
4.4.2 Linear-Address Translation with PAE Paging . . . 4-15
4.5 4-LEVEL PAGING AND 5-LEVEL PAGING . . . 4-20
4.5.1 Ordinary Paging and HLAT Paging . . . 4-20
4.5.2 Use of CR3 with Ordinary 4-Level Paging and 5-Level Paging . . . 4-20
4.5.3 Use of HLATP with HLAT 4-Level Paging and 5-Level Paging . . . 4-21
4.5.4 Linear-Address Translation with 4-Level Paging and 5-Level Paging . . . 4-22
4.5.5 Restart of HLAT Paging . . . 4-33
4.6 ACCESS RIGHTS . . . 4-33
4.6.1 Determination of Access Rights . . . 4-33
4.6.2 Protection Keys . . . 4-36
4.7 PAGE-FAULT EXCEPTIONS . . . 4-37
4.8 ACCESSED AND DIRTY FLAGS . . . 4-39
4.9 PAGING AND MEMORY TYPING . . . 4-39
4.9.1 Paging and Memory Typing When the PAT is Not Supported (Pentium Pro and Pentium II Processors) . . . 4-40
4.9.2 Paging and Memory Typing When the PAT is Supported (Pentium III and More Recent Processor Families) . . . 4-40
4.9.3 Caching Paging-Related Information about Memory Typing . . . 4-41
4.10 CACHING TRANSLATION INFORMATION . . . 4-41
4.10.1 Process-Context Identifiers (PCIDs) . . . 4-41
4.10.2 Translation Lookaside Buffers (TLBs) . . . 4-42
4.10.2.1 Page Numbers, Page Frames, and Page Offsets . . . 4-42
4.10.2.2 Caching Translations in TLBs . . . 4-43
4.10.2.3 Details of TLB Use . . . 4-43
4.10.2.4 Global Pages . . . 4-44
4.10.3 Paging-Structure Caches . . . 4-44
4.10.3.1 Caches for Paging Structures . . . 4-44
4.10.3.2 Using the Paging-Structure Caches to Translate Linear Addresses . . . 4-47
4.10.3.3 Multiple Cached Entries for a Single Paging-Structure Entry . . . 4-47
4.10.4 Invalidation of TLBs and Paging-Structure Caches . . . 4-48
4.10.4.1 Operations that Invalidate TLBs and Paging-Structure Caches . . . 4-48
4.10.4.2 Recommended Invalidation . . . 4-50

PAGE

4.10.4.3 Optional Invalidation . . . 4-51
4.10.4.4 Delayed Invalidation . . . 4-52
4.10.5 Propagation of Paging-Structure Changes to Multiple Processors . . . 4-52
4.11 INTERACTIONS WITH VIRTUAL-MACHINE EXTENSIONS (VMX) . . . 4-53
4.11.1 VMX Transitions . . . 4-53
4.11.2 VMX Support for Address Translation . . . 4-54
4.12 USING PAGING FOR VIRTUAL MEMORY . . . 4-54
4.13 MAPPING SEGMENTS TO PAGES . . . 4-54

CHAPTER 5
PROTECTION

5.1 ENABLING AND DISABLING SEGMENT AND PAGE PROTECTION . . . 5-1
5.2 FIELDS AND FLAGS USED FOR SEGMENT-LEVEL AND PAGE-LEVEL PROTECTION . . . 5-2
5.2.1 Code-Segment Descriptor in 64-bit Mode . . . 5-3
5.3 LIMIT CHECKING . . . 5-4
5.3.1 Limit Checking in 64-bit Mode . . . 5-5
5.4 TYPE CHECKING . . . 5-5
5.4.1 Null Segment Selector Checking . . . 5-6
5.4.1.1 NULL Segment Checking in 64-bit Mode . . . 5-6
5.5 PRIVILEGE LEVELS . . . 5-6
5.6 PRIVILEGE LEVEL CHECKING WHEN ACCESSING DATA SEGMENTS . . . 5-8
5.6.1 Accessing Data in Code Segments . . . 5-9
5.7 PRIVILEGE LEVEL CHECKING WHEN LOADING THE SS REGISTER . . . 5-10
5.8 PRIVILEGE LEVEL CHECKING WHEN TRANSFERRING PROGRAM CONTROL BETWEEN CODE SEGMENTS . . . 5-10
5.8.1 Direct Calls or Jumps to Code Segments . . . 5-10
5.8.1.1 Accessing Nonconforming Code Segments . . . 5-11
5.8.1.2 Accessing Conforming Code Segments . . . 5-12
5.8.2 Gate Descriptors . . . 5-13
5.8.3 Call Gates . . . 5-13
5.8.3.1 IA-32e Mode Call Gates . . . 5-14
5.8.4 Accessing a Code Segment Through a Call Gate . . . 5-15
5.8.5 Stack Switching . . . 5-17
5.8.5.1 Stack Switching in 64-bit Mode . . . 5-19
5.8.6 Returning from a Called Procedure . . . 5-20
5.8.7 Performing Fast Calls to System Procedures with the SYSENTER and SYSEXIT Instructions . . . 5-20
5.8.7.1 SYSENTER and SYSEXIT Instructions in IA-32e Mode . . . 5-21
5.8.8 Fast System Calls in 64-Bit Mode . . . 5-22
5.9 PRIVILEGED INSTRUCTIONS . . . 5-23
5.10 POINTER VALIDATION . . . 5-24
5.10.1 Checking Access Rights (LAR Instruction) . . . 5-24
5.10.2 Checking Read/Write Rights (VERR and VERW Instructions) . . . 5-25
5.10.3 Checking That the Pointer Offset Is Within Limits (LSL Instruction) . . . 5-25
5.10.4 Checking Caller Access Privileges (ARPL Instruction) . . . 5-26
5.10.5 Checking Alignment . . . 5-27
5.11 PAGE-LEVEL PROTECTION . . . 5-27
5.11.1 Page-Protection Flags . . . 5-28
5.11.2 Restricting Addressable Domain . . . 5-28
5.11.3 Page Type . . . 5-28
5.11.4 Combining Protection of Both Levels of Page Tables . . . 5-28
5.11.5 Overrides to Page Protection . . . 5-29
5.12 COMBINING PAGE AND SEGMENT PROTECTION . . . 5-29
5.13 PAGE-LEVEL PROTECTION AND EXECUTE-DISABLE BIT . . . 5-30
5.13.1 Detecting and Enabling the Execute-Disable Capability . . . 5-30
5.13.2 Execute-Disable Page Protection . . . 5-30
5.13.3 Reserved Bit Checking . . . 5-31
5.13.4 Exception Handling . . . 5-32

CHAPTER 6
INTERRUPT AND EXCEPTION HANDLING

6.1 INTERRUPT AND EXCEPTION OVERVIEW . . . 6-1
6.2 EXCEPTION AND INTERRUPT VECTORS . . . 6-1
6.3 SOURCES OF INTERRUPTS . . . 6-2

PAGE

6.3.1 External Interrupts . . . 6-2
6.3.2 Maskable Hardware Interrupts . . . 6-3
6.3.3 Software-Generated Interrupts . . . 6-4
6.4 SOURCES OF EXCEPTIONS . . . 6-4
6.4.1 Program-Error Exceptions . . . 6-4
6.4.2 Software-Generated Exceptions . . . 6-4
6.4.3 Machine-Check Exceptions . . . 6-4
6.5 EXCEPTION CLASSIFICATIONS . . . 6-5
6.6 PROGRAM OR TASK RESTART . . . 6-5
6.7 NONMASKABLE INTERRUPT (NMI) . . . 6-6
6.7.1 Handling Multiple NMIs . . . 6-6
6.8 ENABLING AND DISABLING INTERRUPTS . . . 6-6
6.8.1 Masking Maskable Hardware Interrupts . . . 6-7
6.8.2 Masking Instruction Breakpoints . . . 6-7
6.8.3 Masking Exceptions and Interrupts When Switching Stacks . . . 6-8
6.9 PRIORITIZATION OF CONCURRENT EVENTS . . . 6-8
6.10 INTERRUPT DESCRIPTOR TABLE (IDT) . . . 6-9
6.11 IDT DESCRIPTORS . . . 6-10
6.12 EXCEPTION AND INTERRUPT HANDLING . . . 6-11
6.12.1 Exception- or Interrupt-Handler Procedures . . . 6-12
6.12.1.1 Shadow Stack Usage on Transfers to Interrupt and Exception Handling Routines . . . 6-14
6.12.1.2 Protection of Exception- and Interrupt-Handler Procedures . . . 6-16
6.12.1.3 Flag Usage By Exception- or Interrupt-Handler Procedure . . . 6-17
6.12.2 Interrupt Tasks . . . 6-17
6.13 ERROR CODE . . . 6-18
6.14 EXCEPTION AND INTERRUPT HANDLING IN 64-BIT MODE . . . 6-19
6.14.1 64-Bit Mode IDT . . . 6-19
6.14.2 64-Bit Mode Stack Frame . . . 6-20
6.14.3 IRET in IA-32e Mode . . . 6-21
6.14.4 Stack Switching in IA-32e Mode . . . 6-21
6.14.5 Interrupt Stack Table . . . 6-22
6.15 EXCEPTION AND INTERRUPT REFERENCE . . . 6-23
Interrupt 0—Divide Error Exception (#DE) . . . 6-24
Interrupt 1—Debug Exception (#DB) . . . 6-25
Interrupt 2—NMI Interrupt . . . 6-27
Interrupt 3—Breakpoint Exception (#BP) . . . 6-28
Interrupt 4—Overflow Exception (#OF) . . . 6-29
Interrupt 5—BOUND Range Exceeded Exception (#BR) . . . 6-30
Interrupt 6—Invalid Opcode Exception (#UD) . . . 6-31
Interrupt 7—Device Not Available Exception (#NM) . . . 6-32
Interrupt 8—Double Fault Exception (#DF) . . . 6-33
Interrupt 9—Coprocessor Segment Overrun . . . 6-35
Interrupt 10—Invalid TSS Exception (#TS) . . . 6-36
Interrupt 11—Segment Not Present (#NP) . . . 6-38
Interrupt 12—Stack Fault Exception (#SS) . . . 6-40
Interrupt 13—General Protection Exception (#GP) . . . 6-41
Interrupt 14—Page-Fault Exception (#PF) . . . 6-44
Interrupt 16—x87 FPU Floating-Point Error (#MF) . . . 6-48
Interrupt 17—Alignment Check Exception (#AC) . . . 6-50
Interrupt 18—Machine-Check Exception (#MC) . . . 6-52
Interrupt 19—SIMD Floating-Point Exception (#XM) . . . 6-53
Interrupt 20—Virtualization Exception (#VE) . . . 6-55
Interrupt 21—Control Protection Exception (#CP) . . . 6-56
Interrupts 32 to 255—User Defined Interrupts . . . 6-58

CHAPTER 7
USER INTERRUPTS

7.1 INTRODUCTION . . . 7-1
7.2 ENUMERATION AND ENABLING . . . 7-1
7.3 USER-INTERRUPT STATE AND USER-INTERRUPT MSRS . . . 7-1
7.3.1 User-Interrupt State . . . 7-2

PAGE

7.3.2 User-Interrupt MSRs . . . 7-2
7.4 EVALUATION AND DELIVERY OF USER INTERRUPTS . . . 7-3
7.4.1 User-Interrupt Recognition . . . 7-3
7.4.2 User-Interrupt Delivery . . . 7-4
7.5 USER-INTERRUPT NOTIFICATION IDENTIFICATION AND PROCESSING . . . 7-5
7.5.1 User-Interrupt Notification Identification . . . 7-6
7.5.2 User-Interrupt Notification Processing . . . 7-6
7.6 USER-INTERRUPT INSTRUCTIONS . . . 7-7
7.7 USER IPIS . . . 7-7

CHAPTER 8
TASK MANAGEMENT

8.1 TASK MANAGEMENT OVERVIEW . . . 8-1
8.1.1 Task Structure . . . 8-1
8.1.2 Task State . . . 8-2
8.1.3 Executing a Task . . . 8-2
8.2 TASK MANAGEMENT DATA STRUCTURES . . . 8-3
8.2.1 Task-State Segment (TSS) . . . 8-3
8.2.2 TSS Descriptor . . . 8-5
8.2.3 TSS Descriptor in 64-bit mode . . . 8-6
8.2.4 Task Register . . . 8-7
8.2.5 Task-Gate Descriptor . . . 8-8
8.3 TASK SWITCHING . . . 8-9
8.4 TASK LINKING . . . 8-15
8.4.1 Use of Busy Flag To Prevent Recursive Task Switching . . . 8-16
8.4.2 Modifying Task Linkages . . . 8-16
8.5 TASK ADDRESS SPACE . . . 8-16
8.5.1 Mapping Tasks to the Linear and Physical Address Spaces . . . 8-17
8.5.2 Task Logical Address Space . . . 8-18
8.6 16-BIT TASK-STATE SEGMENT (TSS) . . . 8-18
8.7 TASK MANAGEMENT IN 64-BIT MODE . . . 8-19

CHAPTER 9
MULTIPLE-PROCESSOR MANAGEMENT

9.1 LOCKED ATOMIC OPERATIONS . . . 9-1
9.1.1 Guaranteed Atomic Operations . . . 9-2
9.1.2 Bus Locking . . . 9-3
9.1.2.1 Automatic Locking . . . 9-3
9.1.2.2 Software Controlled Bus Locking . . . 9-3
9.1.3 Handling Self- and Cross-Modifying Code . . . 9-4
9.1.4 Effects of a LOCK Operation on Internal Processor Caches . . . 9-5
9.2 MEMORY ORDERING . . . 9-5
9.2.1 Memory Ordering in the Intel® Pentium® and Intel486™ Processors . . . 9-6
9.2.2 Memory Ordering in P6 and More Recent Processor Families . . . 9-6
9.2.3 Examples Illustrating the Memory-Ordering Principles . . . 9-8
9.2.3.1 Assumptions, Terminology, and Notation . . . 9-8
9.2.3.2 Neither Loads Nor Stores Are Reordered with Like Operations . . . 9-9
9.2.3.3 Stores Are Not Reordered With Earlier Loads . . . 9-9
9.2.3.4 Loads May Be Reordered with Earlier Stores to Different Locations . . . 9-9
9.2.3.5 Intra-Processor Forwarding Is Allowed . . . 9-10
9.2.3.6 Stores Are Transitively Visible . . . 9-11
9.2.3.7 Stores Are Seen in a Consistent Order by Other Processors . . . 9-11
9.2.3.8 Locked Instructions Have a Total Order . . . 9-12
9.2.3.9 Loads and Stores Are Not Reordered with Locked Instructions . . . 9-12
9.2.4 Fast-String Operation and Out-of-Order Stores . . . 9-13
9.2.4.1 Memory-Ordering Model for String Operations on Write-Back (WB) Memory . . . 9-13
9.2.4.2 Examples Illustrating Memory-Ordering Principles for String Operations . . . 9-14
9.2.5 Strengthening or Weakening the Memory-Ordering Model . . . 9-15
9.3 SERIALIZING INSTRUCTIONS . . . 9-17
9.4 MULTIPLE-PROCESSOR (MP) INITIALIZATION . . . 9-18
9.4.1 BSP and AP Processors . . . 9-19
9.4.2 MP Initialization Protocol Requirements and Restrictions . . . 9-19

PAGE

9.4.3 MP Initialization Protocol Algorithm for MP Systems 9-19
9.4.4 MP Initialization Example 9-21
9.4.4.1 Typical BSP Initialization Sequence 9-21
9.4.4.2 Typical AP Initialization Sequence 9-23
9.4.5 Identifying Logical Processors in an MP System 9-23
9.5 INTEL® HYPER-THREADING TECHNOLOGY AND INTEL® MULTI-CORE TECHNOLOGY 9-25
9.6 DETECTING HARDWARE MULTI-THREADING SUPPORT AND TOPOLOGY 9-25
9.6.1 Initializing Processors Supporting Hyper-Threading Technology 9-26
9.6.2 Initializing Multi-Core Processors 9-26
9.6.3 Executing Multiple Threads on an Intel® 64 or IA-32 Processor Supporting Hardware Multi-Threading 9-26
9.6.4 Handling Interrupts on an IA-32 Processor Supporting Hardware Multi-Threading 9-26
9.7 INTEL® HYPER-THREADING TECHNOLOGY ARCHITECTURE 9-27
9.7.1 State of the Logical Processors 9-28
9.7.2 APIC Functionality 9-29
9.7.3 Memory Type Range Registers (MTRR) 9-29
9.7.4 Page Attribute Table (PAT) 9-29
9.7.5 Machine Check Architecture 9-29
9.7.6 Debug Registers and Extensions 9-30
9.7.7 Performance Monitoring Counters 9-30
9.7.8 IA32_MISC_ENABLE MSR 9-30
9.7.9 Memory Ordering 9-30
9.7.10 Serializing Instructions 9-30
9.7.11 Microcode Update Resources 9-30
9.7.12 Self Modifying Code 9-31
9.7.13 Implementation-Specific Intel HT Technology Facilities 9-31
9.7.13.1 Processor Caches 9-31
9.7.13.2 Processor Translation Lookaside Buffers (TLBs) 9-31
9.7.13.3 Thermal Monitor 9-32
9.7.13.4 External Signal Compatibility 9-32
9.8 MULTI-CORE ARCHITECTURE 9-32
9.8.1 Logical Processor Support 9-33
9.8.2 Memory Type Range Registers (MTRR) 9-33
9.8.3 Performance Monitoring Counters 9-33
9.8.4 IA32_MISC_ENABLE MSR 9-33
9.8.5 Microcode Update Resources 9-33
9.9 PROGRAMMING CONSIDERATIONS FOR HARDWARE MULTI-THREADING CAPABLE PROCESSORS 9-34
9.9.1 Hierarchical Mapping of Shared Resources 9-34
9.9.2 Hierarchical Mapping of CPUID Extended Topology Leaf 9-36
9.9.3 Hierarchical ID of Logical Processors in an MP System 9-38
9.9.3.1 Hierarchical ID of Logical Processors with x2APIC ID 9-40
9.9.4 Algorithm for Three-Level Mappings of APIC_ID 9-40
9.9.5 Identifying Topological Relationships in a MP System 9-45
9.10 MANAGEMENT OF IDLE AND BLOCKED CONDITIONS 9-49
9.10.1 HLT Instruction 9-49
9.10.2 PAUSE Instruction 9-49
9.10.3 Detecting Support MONITOR/MWAIT Instruction 9-49
9.10.4 MONITOR/MWAIT Instruction 9-50
9.10.5 Monitor/Mwait Address Range Determination 9-51
9.10.6 Required Operating System Support 9-51
9.10.6.1 Use the PAUSE Instruction in Spin-Wait Loops 9-52
9.10.6.2 Potential Usage of MONITOR/MWAIT in C0 Idle Loops 9-52
9.10.6.3 Halt Idle Logical Processors 9-53
9.10.6.4 Potential Usage of MONITOR/MWAIT in C1 Idle Loops 9-54
9.10.6.5 Guidelines for Scheduling Threads on Logical Processors Sharing Execution Resources 9-54
9.10.6.6 Eliminate Execution-Based Timing Loops 9-55
9.10.6.7 Place Locks and Semaphores in Aligned, 128-Byte Blocks of Memory 9-55
9.11 MP INITIALIZATION FOR P6 FAMILY PROCESSORS 9-55
9.11.1 Overview of the MP Initialization Process For P6 Family Processors 9-55
9.11.2 MP Initialization Protocol Algorithm 9-56
9.11.2.1 Error Detection and Handling During the MP Initialization Protocol 9-58

CHAPTER 10
PROCESSOR MANAGEMENT AND INITIALIZATION
10.1 INITIALIZATION OVERVIEW 10-1

PAGE

10.1.1 Processor State After Reset 10-2
10.1.2 Processor Built-In Self-Test (BIST) 10-5
10.1.3 Model and Stepping Information 10-5
10.1.4 First Instruction Executed 10-5
10.2 X87 FPU INITIALIZATION 10-5
10.2.1 Configuring the x87 FPU Environment 10-6
10.2.2 Setting the Processor for x87 FPU Software Emulation 10-6
10.3 CACHE ENABLING 10-7
10.4 MODEL-SPECIFIC REGISTERS (MSRS) 10-7
10.5 MEMORY TYPE RANGE REGISTERS (MTRRS) 10-8
10.6 INITIALIZING SSE/SSE2/SSE3/SSSE3 EXTENSIONS 10-8
10.7 SOFTWARE INITIALIZATION FOR REAL-ADDRESS MODE OPERATION 10-8
10.7.1 Real-Address Mode IDT 10-8
10.7.2 NMI Interrupt Handling 10-9
10.8 SOFTWARE INITIALIZATION FOR PROTECTED-MODE OPERATION 10-9
10.8.1 Protected-Mode System Data Structures 10-9
10.8.2 Initializing Protected-Mode Exceptions and Interrupts 10-10
10.8.3 Initializing Paging 10-10
10.8.4 Initializing Multitasking 10-10
10.8.5 Initializing IA-32e Mode 10-11
10.8.5.1 IA-32e Mode System Data Structures 10-11
10.8.5.2 IA-32e Mode Interrupts and Exceptions 10-12
10.8.5.3 64-bit Mode and Compatibility Mode Operation 10-12
10.8.5.4 Switching Out of IA-32e Mode Operation 10-12
10.9 MODE SWITCHING 10-13
10.9.1 Switching to Protected Mode 10-13
10.9.2 Switching Back to Real-Address Mode 10-14
10.10 INITIALIZATION AND MODE SWITCHING EXAMPLE 10-14
10.10.1 Assembler Usage 10-16
10.10.2 STARTUP.ASM Listing 10-16
10.10.3 MAIN.ASM Source Code 10-25
10.10.4 Supporting Files 10-25
10.11 MICROCODE UPDATE FACILITIES 10-27
10.11.1 Microcode Update 10-28
10.11.2 Optional Extended Signature Table 10-31
10.11.3 Processor Identification 10-32
10.11.4 Platform Identification 10-32
10.11.5 Microcode Update Checksum 10-33
10.11.6 Microcode Update Loader 10-34
10.11.6.1 Hard Resets in Update Loading 10-35
10.11.6.2 Update in a Multiprocessor System 10-35
10.11.6.3 Update in a System Supporting Intel Hyper-Threading Technology 10-35
10.11.6.4 Update in a System Supporting Dual-Core Technology 10-35
10.11.6.5 Update Loader Enhancements 10-35
10.11.7 Update Signature and Verification 10-36
10.11.7.1 Determining the Signature 10-36
10.11.7.2 Authenticating the Update 10-37
10.11.8 Optional Processor Microcode Update Specifications 10-37
10.11.8.1 Responsibilities of the BIOS 10-38
10.11.8.2 Responsibilities of the Calling Program 10-39
10.11.8.3 Microcode Update Functions 10-42
10.11.8.4 INT 15H-based Interface 10-42
10.11.8.5 Function 00H—Presence Test 10-42
10.11.8.6 Function 01H—Write Microcode Update Data 10-43
10.11.8.7 Function 02H—Microcode Update Control 10-46
10.11.8.8 Function 03H—Read Microcode Update Data 10-47
10.11.8.9 Return Codes 10-48

CHAPTER 11
ADVANCED PROGRAMMABLE INTERRUPT CONTROLLER (APIC)

11.1 LOCAL AND I/O APIC OVERVIEW 11-1
11.2 SYSTEM BUS VS. APIC BUS 11-4
11.3 THE INTEL® 82489DX EXTERNAL APIC, THE APIC, THE XAPIC, AND THE X2APIC 11-4
11.4 LOCAL APIC 11-4

PAGE

11.4.1 The Local APIC Block Diagram 11-4
11.4.2 Presence of the Local APIC 11-7
11.4.3 Enabling or Disabling the Local APIC 11-8
11.4.4 Local APIC Status and Location 11-8
11.4.5 Relocating the Local APIC Registers 11-9
11.4.6 Local APIC ID 11-9
11.4.7 Local APIC State 11-10
11.4.7.1 Local APIC State After Power-Up or Reset 11-10
11.4.7.2 Local APIC State After It Has Been Software Disabled 11-10
11.4.7.3 Local APIC State After an INIT Reset ("Wait-for-SIPI" State) 11-10
11.4.7.4 Local APIC State After It Receives an INIT-Deassert IPI 11-11
11.4.8 Local APIC Version Register 11-11
11.5 HANDLING LOCAL INTERRUPTS 11-12
11.5.1 Local Vector Table 11-12
11.5.2 Valid Interrupt Vectors 11-15
11.5.3 Error Handling 11-15
11.5.4 APIC Timer 11-16
11.5.4.1 TSC-Deadline Mode 11-17
11.5.5 Local Interrupt Acceptance 11-18
11.6 ISSUING INTERPROCESSOR INTERRUPTS 11-19
11.6.1 Interrupt Command Register (ICR) 11-19
11.6.2 Determining IPI Destination 11-22
11.6.2.1 Physical Destination Mode 11-23
11.6.2.2 Logical Destination Mode 11-23
11.6.2.3 Broadcast/Self Delivery Mode 11-25
11.6.2.4 Lowest Priority Delivery Mode 11-25
11.6.3 IPI Delivery and Acceptance 11-26
11.7 SYSTEM AND APIC BUS ARBITRATION 11-26
11.8 HANDLING INTERRUPTS 11-26
11.8.1 Interrupt Handling with the Pentium 4 and Intel Xeon Processors 11-27
11.8.2 Interrupt Handling with the P6 Family and Pentium Processors 11-27
11.8.3 Interrupt, Task, and Processor Priority 11-28
11.8.3.1 Task and Processor Priorities 11-29
11.8.4 Interrupt Acceptance for Fixed Interrupts 11-30
11.8.5 Signaling Interrupt Servicing Completion 11-31
11.8.6 Task Priority in IA-32e Mode 11-31
11.8.6.1 Interaction of Task Priorities between CR8 and APIC 11-32
11.9 SPURIOUS INTERRUPT 11-32
11.10 APIC BUS MESSAGE PASSING MECHANISM AND PROTOCOL (P6 FAMILY, PENTIUM PROCESSORS) 11-33
11.10.1 Bus Message Formats 11-34
11.11 MESSAGE SIGNALLED INTERRUPTS 11-34
11.11.1 Message Address Register Format 11-34
11.11.2 Message Data Register Format 11-35
11.12 EXTENDED XAPIC (X2APIC) 11-36
11.12.1 Detecting and Enabling x2APIC Mode 11-37
11.12.1.1 Instructions to Access APIC Registers 11-37
11.12.1.2 x2APIC Register Address Space 11-38
11.12.1.3 Reserved Bit Checking 11-40
11.12.2 x2APIC Register Availability 11-40
11.12.3 MSR Access in x2APIC Mode 11-40
11.12.4 VM-Exit Controls for MSRs and x2APIC Registers 11-41
11.12.5 x2APIC State Transitions 11-41
11.12.5.1 x2APIC States 11-41
x2APIC After Reset 11-42
x2APIC Transitions From x2APIC Mode 11-42
x2APIC Transitions From Disabled Mode 11-43
State Changes From xAPIC Mode to x2APIC Mode 11-43
11.12.6 Routing of Device Interrupts in x2APIC Mode 11-43
11.12.7 Initialization by System Software 11-43
11.12.8 CPUID Extensions And Topology Enumeration 11-43
11.12.8.1 Consistency of APIC IDs and CPUID 11-44
11.12.9 ICR Operation in x2APIC Mode 11-44
11.12.10 Determining IPI Destination in x2APIC Mode 11-45
11.12.10.1 Logical Destination Mode in x2APIC Mode 11-45

11.12.10.2 Deriving Logical x2APIC ID from the Local x2APIC ID. 11-46
11.12.11 SELF IPI Register 11-47
11.13 APIC BUS MESSAGE FORMATS. 11-47
11.13.1 Bus Message Formats 11-47
11.13.2 EOI Message 11-47
11.13.2.1 Short Message 11-48
11.13.2.2 Non-focused Lowest Priority Message. 11-49
11.13.2.3 APIC Bus Status Cycles 11-50

CHAPTER 12
MEMORY CACHE CONTROL

12.1 INTERNAL CACHES, TLBS, AND BUFFERS 12-1
12.2 CACHING TERMINOLOGY 12-5
12.3 METHODS OF CACHING AVAILABLE. 12-6
12.3.1 Buffering of Write Combining Memory Locations 12-8
12.3.2 Choosing a Memory Type 12-8
12.3.3 Code Fetches in Uncacheable Memory 12-9
12.4 CACHE CONTROL PROTOCOL. 12-9
12.5 CACHE CONTROL 12-10
12.5.1 Cache Control Registers and Bits 12-10
12.5.2 Precedence of Cache Controls. 12-13
12.5.2.1 Selecting Memory Types for Pentium Pro and Pentium II Processors 12-14
12.5.2.2 Selecting Memory Types for Pentium III and More Recent Processor Families 12-15
12.5.2.3 Writing Values Across Pages with Different Memory Types. 12-16
12.5.3 Preventing Caching. 12-16
12.5.4 Disabling and Enabling the L3 Cache 12-17
12.5.5 Cache Management Instructions. 12-17
12.5.6 L1 Data Cache Context Mode. 12-18
12.5.6.1 Adaptive Mode 12-18
12.5.6.2 Shared Mode 12-18
12.6 SELF-MODIFYING CODE 12-18
12.7 IMPLICIT CACHING (PENTIUM 4, INTEL XEON, AND P6 FAMILY PROCESSORS). 12-19
12.8 EXPLICIT CACHING. 12-19
12.9 INVALIDATING THE TRANSLATION LOOKASIDE BUFFERS (TLBS) 12-19
12.10 STORE BUFFER. 12-20
12.11 MEMORY TYPE RANGE REGISTERS (MTRRS). 12-20
12.11.1 MTRR Feature Identification 12-21
12.11.2 Setting Memory Ranges with MTRRs 12-22
12.11.2.1 IA32_MTRR_DEF_TYPE MSR 12-22
12.11.2.2 Fixed Range MTRRs 12-23
12.11.2.3 Variable Range MTRRs. 12-23
12.11.2.4 System-Management Range Register Interface 12-25
12.11.3 Example Base and Mask Calculations 12-26
12.11.3.1 Base and Mask Calculations for Greater-Than 36-bit Physical Address Support. 12-27
12.11.4 Range Size and Alignment Requirement 12-28
12.11.4.1 MTRR Precedences 12-28
12.11.5 MTRR Initialization. 12-29
12.11.6 Remapping Memory Types 12-29
12.11.7 MTRR Maintenance Programming Interface 12-29
12.11.7.1 MemTypeGet() Function 12-29
12.11.7.2 MemTypeSet() Function 12-31
12.11.8 MTRR Considerations in MP Systems 12-32
12.11.9 Large Page Size Considerations 12-33
12.12 PAGE ATTRIBUTE TABLE (PAT). 12-33
12.12.1 Detecting Support for the PAT Feature. 12-34
12.12.2 IA32_PAT MSR 12-34
12.12.3 Selecting a Memory Type from the PAT 12-35
12.12.4 Programming the PAT 12-35
12.12.5 PAT Compatibility with Earlier IA-32 Processors. 12-36

PAGE

CHAPTER 13
INTEL® MMX™ TECHNOLOGY SYSTEM PROGRAMMING

13.1 EMULATION OF THE MMX INSTRUCTION SET 13-1
13.2 THE MMX STATE AND MMX REGISTER ALIASING 13-1
13.2.1 Effect of MMX, x87 FPU, FXSAVE, and FXRSTOR Instructions on the x87 FPU Tag Word 13-3
13.3 SAVING AND RESTORING THE MMX STATE AND REGISTERS 13-3
13.4 SAVING MMX STATE ON TASK OR CONTEXT SWITCHES 13-4
13.5 EXCEPTIONS THAT CAN OCCUR WHEN EXECUTING MMX INSTRUCTIONS 13-4
13.5.1 Effect of MMX Instructions on Pending x87 Floating-Point Exceptions 13-5
13.6 DEBUGGING MMX CODE 13-5

CHAPTER 14
SYSTEM PROGRAMMING FOR INSTRUCTION SET EXTENSIONS AND PROCESSOR EXTENDED STATES

14.1 PROVIDING OPERATING SYSTEM SUPPORT FOR SSE EXTENSIONS 14-1
14.1.1 Adding Support to an Operating System for SSE Extensions 14-2
14.1.2 Checking for CPU Support 14-2
14.1.3 Initialization of the SSE Extensions 14-2
14.1.4 Providing Non-Numeric Exception Handlers for Exceptions Generated by the SSE Instructions 14-4
14.1.5 Providing a Handler for the SIMD Floating-Point Exception (#XM) 14-5
14.1.5.1 Numeric Error flag and IGNNE# 14-6
14.2 EMULATION OF SSE EXTENSIONS 14-6
14.3 SAVING AND RESTORING SSE STATE 14-6
14.4 DESIGNING OS FACILITIES FOR SAVING X87 FPU, SSE, AND EXTENDED STATES ON TASK OR CONTEXT SWITCHES 14-6
14.4.1 Using the TS Flag to Control the Saving of the x87 FPU and SSE State 14-7
14.5 THE XSAVE FEATURE SET AND PROCESSOR EXTENDED STATE MANAGEMENT 14-7
14.5.1 Checking the Support for XSAVE Feature Set 14-8
14.5.2 Determining the XSAVE Managed Feature States And The Required Buffer Size 14-8
14.5.3 Enable the Use Of XSAVE Feature Set And XSAVE State Components 14-9
14.5.4 Provide an Initialization for the XSAVE State Components 14-9
14.5.5 Providing the Required Exception Handlers 14-9
14.6 INTEROPERABILITY OF THE XSAVE FEATURE SET AND FXSAVE/FXRSTOR 14-9
14.7 THE XSAVE FEATURE SET AND PROCESSOR SUPERVISOR STATE MANAGEMENT 14-10
14.8 SYSTEM PROGRAMMING FOR XSAVE MANAGED FEATURES 14-10
14.8.1 Intel® Advanced Vector Extensions (Intel® AVX) 14-11
14.8.2 Intel® Advanced Vector Extensions 512 (Intel® AVX-512) 14-11

CHAPTER 15
POWER AND THERMAL MANAGEMENT

15.1 ENHANCED INTEL SPEEDSTEP® TECHNOLOGY 15-1
15.1.1 Software Interface For Initiating Performance State Transitions 15-1
15.2 P-STATE HARDWARE COORDINATION 15-1
15.3 SYSTEM SOFTWARE CONSIDERATIONS AND OPPORTUNISTIC PROCESSOR PERFORMANCE OPERATION 15-3
15.3.1 Intel® Dynamic Acceleration Technology 15-3
15.3.2 System Software Interfaces for Opportunistic Processor Performance Operation 15-3
15.3.2.1 Discover Hardware Support and Enabling of Opportunistic Processor Performance Operation 15-3
15.3.2.2 OS Control of Opportunistic Processor Performance Operation 15-4
15.3.2.3 Required Changes to OS Power Management P-State Policy 15-4
15.3.3 Intel® Turbo Boost Technology 15-5
15.3.4 Performance and Energy Bias Hint Support 15-5
15.4 HARDWARE-CONTROLLED PERFORMANCE STATES (HWP) 15-5
15.4.1 HWP Programming Interfaces 15-6
15.4.2 Enabling HWP 15-7
15.4.3 HWP Performance Range and Dynamic Capabilities 15-7
15.4.4 Managing HWP 15-8
15.4.4.1 IA32_HWP_REQUEST MSR (Address: 774H Logical Processor Scope) 15-8
15.4.4.2 IA32_HWP_REQUEST_PKG MSR (Address: 772H Package Scope) 15-11
15.4.4.3 IA32_HWP_PECI_REQUEST_INFO MSR (Address 775H Package Scope) 15-11
15.4.4.4 IA32_HWP_CTL MSR (Address: 776H Logical Processor Scope) 15-12
15.4.5 HWP Feedback 15-13
15.4.5.1 Non-Architectural HWP Feedback 15-15
15.4.6 HWP Notifications 15-16

15.4.7 Idle Logical Processor Impact on Core Frequency 15-16
15.4.8 Fast Write of Uncore MSR (Model Specific Feature) 15-17
15.4.8.1 FAST_UNCORE_MSRS_CAPABILITY (Address: 0x65F, Logical Processor Scope) 15-17
15.4.8.2 FAST_UNCORE_MSRS_CTL (Address: 0x657, Logical Processor Scope) 15-17
15.4.8.3 FAST_UNCORE_MSRS_STATUS (Address: 0x65E, Logical Processor Scope) 15-18
15.4.9 Fast_IA32_HWP_REQUEST CPUID 15-18
15.4.10 Recommendations for OS use of HWP Controls 15-18
15.5 HARDWARE DUTY CYCLING (HDC) 15-20
15.5.1 Hardware Duty Cycling Programming Interfaces 15-20
15.5.2 Package level Enabling HDC 15-21
15.5.3 Logical-Processor Level HDC Control 15-22
15.5.4 HDC Residency Counters 15-22
15.5.4.1 IA32_THREAD_STALL 15-22
15.5.4.2 Non-Architectural HDC Residency Counters 15-23
15.5.5 MPERF and APERF Counters Under HDC 15-25
15.6 HARDWARE FEEDBACK INTERFACE AND INTEL® THREAD DIRECTOR 15-25
15.6.1 Hardware Feedback Interface Table Structure 15-25
15.6.2 Intel® Thread Director Table Structure 15-27
15.6.3 Intel® Thread Director Usage Model 15-30
15.6.4 Hardware Feedback Interface Pointer 15-31
15.6.5 Hardware Feedback Interface Configuration 15-31
15.6.6 Hardware Feedback Interface Notifications 15-32
15.6.7 Hardware Feedback Interface and Intel® Thread Director Structure Dynamic Update 15-33
15.6.8 Logical Processor Scope Intel® Thread Director Configuration 15-33
15.6.9 Implicit Reset of Package and Logical Processor Scope Configuration MSRs 15-34
15.6.10 Logical Processor Scope Intel® Thread Director Run Time Characteristics 15-34
15.6.11 Logical Processor Scope History 15-34
15.6.11.1 Enabling Intel® Thread Director History Reset 15-35
15.6.11.2 Implicit Intel® Thread Director History Reset 15-35
15.7 MWAIT EXTENSIONS FOR ADVANCED POWER MANAGEMENT 15-35
15.8 THERMAL MONITORING AND PROTECTION 15-36
15.8.1 Catastrophic Shutdown Detector 15-37
15.8.2 Thermal Monitor 15-37
15.8.2.1 Thermal Monitor 1 15-37
15.8.2.2 Thermal Monitor 2 15-37
15.8.2.3 Two Methods for Enabling TM2 15-37
15.8.2.4 Performance State Transitions and Thermal Monitoring 15-38
15.8.2.5 Thermal Status Information 15-38
15.8.2.6 Adaptive Thermal Monitor 15-39
15.8.3 Software Controlled Clock Modulation 15-40
15.8.3.1 Extension of Software Controlled Clock Modulation 15-41
15.8.4 Detection of Thermal Monitor and Software Controlled Clock Modulation Facilities 15-41
15.8.4.1 Detection of Software Controlled Clock Modulation Extension 15-41
15.8.5 On Die Digital Thermal Sensors 15-42
15.8.5.1 Digital Thermal Sensor Enumeration 15-42
15.8.5.2 Reading the Digital Sensor 15-42
15.8.6 Power Limit Notification 15-45
15.9 PACKAGE LEVEL THERMAL MANAGEMENT 15-45
15.9.1 Support for Passive and Active cooling 15-47
15.10 PLATFORM SPECIFIC POWER MANAGEMENT SUPPORT 15-48
15.10.1 RAPL Interfaces 15-48
15.10.2 RAPL Domains and Platform Specificity 15-49
15.10.3 Package RAPL Domain 15-50
15.10.4 PP0/PP1 RAPL Domains 15-52
15.10.5 DRAM RAPL Domain 15-54

CHAPTER 16
MACHINE-CHECK ARCHITECTURE

16.1 MACHINE-CHECK ARCHITECTURE 16-1
16.2 COMPATIBILITY WITH PENTIUM PROCESSOR 16-1
16.3 MACHINE-CHECK MSRS 16-2
16.3.1 Machine-Check Global Control MSRs 16-2
16.3.1.1 IA32_MCG_CAP MSR 16-2
16.3.1.2 IA32_MCG_STATUS MSR 16-4

PAGE

16.3.1.3 IA32_MCG_CTL MSR 16-4
16.3.1.4 IA32_MCG_EXT_CTL MSR 16-4
16.3.1.5 Enabling Local Machine Check 16-5
16.3.2 Error-Reporting Register Banks 16-5
16.3.2.1 IA32_MCi_CTL MSRs 16-5
16.3.2.2 IA32_MCi_STATUS MSRS 16-6
16.3.2.3 IA32_MCi_ADDR MSRs 16-9
16.3.2.4 IA32_MCi_MISC MSRs 16-9
16.3.2.5 IA32_MCi_CTL2 MSRs 16-11
16.3.2.6 IA32_MCG Extended Machine Check State MSRs 16-12
16.3.3 Mapping of the Pentium Processor Machine-Check Errors to the Machine-Check Architecture 16-13
16.4 ENHANCED CACHE ERROR REPORTING 16-13
16.5 CORRECTED MACHINE CHECK ERROR INTERRUPT 16-14
16.5.1 CMCI Local APIC Interface 16-14
16.5.2 System Software Recommendation for Managing CMCI and Machine Check Resources 16-15
16.5.2.1 CMCI Initialization 16-15
16.5.2.2 CMCI Threshold Management 16-16
16.5.2.3 CMCI Interrupt Handler 16-16
16.6 RECOVERY OF UNCORRECTED RECOVERABLE (UCR) ERRORS 16-16
16.6.1 Detection of Software Error Recovery Support 16-16
16.6.2 UCR Error Reporting and Logging 16-17
16.6.3 UCR Error Classification 16-17
16.6.4 UCR Error Overwrite Rules 16-18
16.7 MACHINE-CHECK AVAILABILITY 16-19
16.8 MACHINE-CHECK INITIALIZATION 16-19
16.9 INTERPRETING THE MCA ERROR CODES 16-20
16.9.1 Simple Error Codes 16-21
16.9.2 Compound Error Codes 16-21
16.9.2.1 Correction Report Filtering (F) Bit 16-22
16.9.2.2 Transaction Type (TT) Sub-Field 16-22
16.9.2.3 Level (LL) Sub-Field 16-22
16.9.2.4 Request (RRRR) Sub-Field 16-22
16.9.2.5 Bus and Interconnect Errors 16-23
16.9.2.6 Memory Controller and Extended Memory Errors 16-24
16.9.3 Architecturally Defined UCR Errors 16-24
16.9.3.1 Architecturally Defined SRAO Errors 16-24
16.9.3.2 Architecturally Defined SRAR Errors 16-25
16.9.4 Multiple MCA Errors 16-27
16.9.5 Machine-Check Error Codes Interpretation 16-27
16.10 GUIDELINES FOR WRITING MACHINE-CHECK SOFTWARE 16-28
16.10.1 Machine-Check Exception Handler 16-28
16.10.2 Pentium Processor Machine-Check Exception Handling 16-29
16.10.3 Logging Correctable Machine-Check Errors 16-29
16.10.4 Machine-Check Software Handler Guidelines for Error Recovery 16-31
16.10.4.1 Machine-Check Exception Handler for Error Recovery 16-31
16.10.4.2 Corrected Machine-Check Handler for Error Recovery 16-35

CHAPTER 17
INTERPRETING MACHINE CHECK ERROR CODES

17.1 INCREMENTAL DECODING INFORMATION: PROCESSOR FAMILY 06H, MACHINE ERROR CODES FOR MACHINE CHECK 17-1
17.2 INCREMENTAL DECODING INFORMATION: INTEL® CORE™ 2 PROCESSOR FAMILY, MACHINE ERROR CODES FOR MACHINE CHECK 17-3
17.2.1 Model-Specific Machine Check Error Codes for Intel® Xeon® Processor 7400 Series 17-5
17.2.1.1 Processor Machine Check Status Register, Incremental MCA Error Code Definition 17-6
17.2.2 Intel® Xeon® Processor 7400 Model Specific Error Code Field 17-6
17.2.2.1 Processor Model Specific Error Code Field, Type B: Bus and Interconnect Error Codes 17-6
17.2.2.2 Processor Model Specific Error Code Field, Type C: Cache Bus Controller Error Codes 17-7
17.3 INCREMENTAL DECODING INFORMATION: INTEL® XEON® PROCESSOR 3400, 3500, 5500 SERIES, MACHINE ERROR CODES FOR MACHINE CHECK 17-7
17.3.1 Intel® QPI Machine Check Errors 17-8
17.3.2 Internal Machine Check Errors 17-9
17.3.3 Memory Controller Errors 17-9
17.4 INCREMENTAL DECODING INFORMATION: INTEL® XEON® PROCESSOR E5 FAMILY, MACHINE ERROR CODES FOR MACHINE CHECK 17-10

17.4.1 Internal Machine Check Errors....17-10
17.4.2 Intel® QPI Machine Check Errors....17-11
17.4.3 Integrated Memory Controller Machine Check Errors....17-11
17.5 INCREMENTAL DECODING INFORMATION: INTEL® XEON® PROCESSOR E5 V2 AND INTEL® XEON® PROCESSOR E7 V2 FAMILIES, MACHINE ERROR CODES FOR MACHINE CHECK....17-13
17.5.1 Internal Machine Check Errors....17-13
17.5.2 Integrated Memory Controller Machine Check Errors....17-14
17.5.3 Home Agent Machine Check Errors....17-15
17.6 INCREMENTAL DECODING INFORMATION: INTEL® XEON® PROCESSOR E5 V3 FAMILY, MACHINE ERROR CODES FOR MACHINE CHECK....17-15
17.6.1 Internal Machine Check Errors....17-16
17.6.2 Intel® QPI Machine Check Errors....17-17
17.6.3 Integrated Memory Controller Machine Check Errors....17-17
17.6.4 Home Agent Machine Check Errors....17-19
17.7 INCREMENTAL DECODING INFORMATION: INTEL® XEON® PROCESSOR D FAMILY, MACHINE ERROR CODES FOR MACHINE CHECK....17-19
17.7.1 Internal Machine Check Errors....17-19
17.7.2 Integrated Memory Controller Machine Check Errors....17-20
17.8 INCREMENTAL DECODING INFORMATION: INTEL® XEON® PROCESSOR E5 V4 FAMILY, MACHINE ERROR CODES FOR MACHINE CHECK....17-21
17.8.1 Integrated Memory Controller Machine Check Errors....17-21
17.8.2 Home Agent Machine Check Errors....17-21
17.9 INCREMENTAL DECODING INFORMATION: INTEL® XEON® SCALABLE PROCESSOR FAMILY, MACHINE ERROR CODES FOR MACHINE CHECK....17-22
17.9.1 Internal Machine Check Errors....17-22
17.9.2 Interconnect Machine Check Errors....17-24
17.9.3 Integrated Memory Controller Machine Check Errors....17-25
17.9.4 M2M Machine Check Errors....17-26
17.9.5 Home Agent Machine Check Errors....17-27
17.10 INCREMENTAL DECODING INFORMATION: PROCESSOR FAMILY WITH CPUID DISPLAYFAMILY_DISPLAYMODEL SIGNATURE 06_5FH, MACHINE ERROR CODES FOR MACHINE CHECK....17-28
17.10.1 Integrated Memory Controller Machine Check Errors....17-28
17.11 INCREMENTAL DECODING INFORMATION: 3RD GENERATION INTEL® XEON® SCALABLE PROCESSOR FAMILY, MACHINE ERROR CODES FOR MACHINE CHECK....17-28
17.11.1 Internal Machine Check Errors....17-29
17.11.2 Interconnect Machine Check Errors....17-31
17.11.3 Integrated Memory Controller Machine Check Errors....17-32
17.11.4 M2M Machine Check Errors....17-36
17.12 INCREMENTAL DECODING INFORMATION: PROCESSOR FAMILY WITH CPUID DISPLAYFAMILY_DISPLAYMODEL SIGNATURE 06_86H, MACHINE ERROR CODES FOR MACHINE CHECK....17-36
17.12.1 Integrated Memory Controller Machine Check Errors....17-36
17.12.2 M2M Machine Check Errors....17-37
17.13 INCREMENTAL DECODING INFORMATION: 4TH GENERATION INTEL® XEON® SCALABLE PROCESSOR FAMILY, MACHINE ERROR CODES FOR MACHINE CHECK....17-37
17.13.1 Internal Machine Check Errors....17-37
17.13.2 Integrated Memory Controller Machine Check Errors....17-41
17.13.3 M2M Machine Check Errors....17-43
17.13.4 High Bandwidth Memory Machine Check Errors....17-44
17.14 INCREMENTAL DECODING INFORMATION: PROCESSOR FAMILY 0FH, MACHINE ERROR CODES FOR MACHINE CHECK....17-44
17.14.1 Model-Specific Machine Check Error Codes for the Intel® Xeon® Processor MP 7100 Series....17-45
17.14.1.1 Processor Machine Check Status Register MCA Error Code Definition....17-46
17.14.2 Other_Info Field (All MCA Error Types)....17-47
17.14.3 Processor Model Specific Error Code Field....17-48
17.14.3.1 MCA Error Type A: L3 Error....17-48
17.14.3.2 Processor Model Specific Error Code Field Type B: Bus and Interconnect Error....17-48
17.14.3.3 Processor Model Specific Error Code Field Type C: Cache Bus Controller Error....17-49

CHAPTER 18
DEBUG, BRANCH PROFILE, TSC, AND INTEL® RESOURCE DIRECTOR TECHNOLOGY (INTEL® RDT) FEATURES

18.1 OVERVIEW OF DEBUG SUPPORT FACILITIES....18-1
18.2 DEBUG REGISTERS....18-2
18.2.1 Debug Address Registers (DR0-DR3)....18-4

PAGE

18.2.2 Debug Registers DR4 and DR5 18-4
18.2.3 Debug Status Register (DR6) 18-4
18.2.4 Debug Control Register (DR7) 18-4
18.2.5 Breakpoint Field Recognition 18-6
18.2.6 Debug Registers and Intel® 64 Processors 18-7
18.3 DEBUG EXCEPTIONS 18-8
18.3.1 Debug Exception (#DB)—Interrupt Vector 1 18-8
18.3.1.1 Instruction-Breakpoint Exception Condition 18-8
18.3.1.2 Data Memory and I/O Breakpoint Exception Conditions 18-9
18.3.1.3 General-Detect Exception Condition 18-10
18.3.1.4 Single-Step Exception Condition 18-10
18.3.1.5 Task-Switch Exception Condition 18-10
18.3.2 Breakpoint Exception (#BP)—Interrupt Vector 3 18-11
18.3.3 Debug Exceptions, Breakpoint Exceptions, and Restricted Transactional Memory (RTM) 18-11
18.4 LAST BRANCH, INTERRUPT, AND EXCEPTION RECORDING OVERVIEW 18-11
18.4.1 IA32_DEBUGCTL MSR 18-12
18.4.2 Monitoring Branches, Exceptions, and Interrupts 18-13
18.4.3 Single-Stepping on Branches 18-14
18.4.4 Branch Trace Messages 18-14
18.4.4.1 Branch Trace Message Visibility 18-14
18.4.5 Branch Trace Store (BTS) 18-14
18.4.6 CPL-Qualified Branch Trace Mechanism 18-15
18.4.7 Freezing LBR and Performance Counters on PMI 18-15
18.4.8 LBR Stack 18-16
18.4.8.1 LBR Stack and Intel® 64 Processors 18-17
18.4.8.2 LBR Stack and IA-32 Processors 18-18
18.4.8.3 Last Exception Records and Intel 64 Architecture 18-18
18.4.9 BTS and DS Save Area 18-18
18.4.9.1 64 Bit Format of the DS Save Area 18-21
18.4.9.2 Setting Up the DS Save Area 18-23
18.4.9.3 Setting Up the BTS Buffer 18-24
18.4.9.4 Setting Up CPL-Qualified BTS 18-25
18.4.9.5 Writing the DS Interrupt Service Routine 18-25
18.5 LAST BRANCH, INTERRUPT, AND EXCEPTION RECORDING (INTEL® CORE™ 2 DUO AND INTEL ATOM® PROCESSORS) 18-26
18.5.1 LBR Stack 18-26
18.5.2 LBR Stack in Intel Atom® Processors based on the Silvermont Microarchitecture 18-27
18.6 LAST BRANCH, CALL STACK, INTERRUPT, AND EXCEPTION RECORDING FOR PROCESSORS BASED ON GOLDMONT MICROARCHITECTURE 18-27
18.7 LAST BRANCH, CALL STACK, INTERRUPT, AND EXCEPTION RECORDING FOR PROCESSORS BASED ON GOLDMONT PLUS MICROARCHITECTURE 18-28
18.8 LAST BRANCH, INTERRUPT, AND EXCEPTION RECORDING FOR INTEL® XEON PHI™ PROCESSOR 7200/5200/3200 18-28
18.9 LAST BRANCH, INTERRUPT, AND EXCEPTION RECORDING FOR PROCESSORS BASED ON NEHALEM MICROARCHITECTURE 18-28
18.9.1 LBR Stack 18-29
18.9.2 Filtering of Last Branch Records 18-30
18.10 LAST BRANCH, INTERRUPT, AND EXCEPTION RECORDING FOR PROCESSORS BASED ON SANDY BRIDGE MICROARCHITECTURE 18-30
18.11 LAST BRANCH, CALL STACK, INTERRUPT, AND EXCEPTION RECORDING FOR PROCESSORS BASED ON HASWELL MICROARCHITECTURE 18-31
18.11.1 LBR Stack Enhancement 18-32
18.12 LAST BRANCH, CALL STACK, INTERRUPT, AND EXCEPTION RECORDING FOR PROCESSORS BASED ON SKYLAKE MICROARCHITECTURE 18-32
18.12.1 MSR_LBR_INFO_x MSR 18-33
18.12.2 Streamlined Freeze_LBRs_On_PMI Operation 18-33
18.12.3 LBR Behavior and Deep C-State 18-34
18.13 LAST BRANCH, INTERRUPT, AND EXCEPTION RECORDING (PROCESSORS BASED ON INTEL NETBURST® MICROARCHITECTURE) 18-34
18.13.1 MSR_DEBUGCTLA MSR 18-34
18.13.2 LBR Stack for Processors Based on Intel NetBurst® Microarchitecture 18-35
18.13.3 Last Exception Records 18-36
18.14 LAST BRANCH, INTERRUPT, AND EXCEPTION RECORDING (INTEL® CORE™ SOLO AND INTEL® CORE™ DUO PROCESSORS) 18-37
18.15 LAST BRANCH, INTERRUPT, AND EXCEPTION RECORDING (PENTIUM M PROCESSORS) 18-38
18.16 LAST BRANCH, INTERRUPT, AND EXCEPTION RECORDING (P6 FAMILY PROCESSORS) 18-39
18.16.1 DEBUGCTLMSR Register 18-39

18.16.2 Last Branch and Last Exception MSRs 18-40
18.16.3 Monitoring Branches, Exceptions, and Interrupts 18-41
18.17 TIME-STAMP COUNTER 18-41
18.17.1 Invariant TSC 18-42
18.17.2 IA32_TSC_AUX Register and RDTSCP Support 18-42
18.17.3 Time-Stamp Counter Adjustment 18-43
18.17.4 Invariant Time-Keeping 18-43
18.18 INTEL® RESOURCE DIRECTOR TECHNOLOGY (INTEL® RDT) MONITORING FEATURES 18-43
18.18.1 Overview of Cache Monitoring Technology and Memory Bandwidth Monitoring 18-44
18.18.2 Enabling Monitoring: Usage Flow 18-44
18.18.3 Enumeration and Detecting Support of Cache Monitoring Technology and Memory Bandwidth Monitoring 18-45
18.18.4 Monitoring Resource Type and Capability Enumeration 18-45
18.18.5 Feature-Specific Enumeration 18-46
18.18.5.1 Cache Monitoring Technology 18-47
18.18.5.2 Memory Bandwidth Monitoring 18-47
18.18.6 Monitoring Resource RMID Association 18-47
18.18.7 Monitoring Resource Selection and Reporting Infrastructure 18-48
18.18.8 Monitoring Programming Considerations 18-49
18.18.8.1 Monitoring Dynamic Configuration 18-50
18.18.8.2 Monitoring Operation With Power Saving Features 18-50
18.18.8.3 Monitoring Operation with Other Operating Modes 18-50
18.18.8.4 Monitoring Operation with RAS Features 18-50
18.19 INTEL® RESOURCE DIRECTOR TECHNOLOGY (INTEL® RDT) ALLOCATION FEATURES 18-50
18.19.1 Introduction to Cache Allocation Technology (CAT) 18-50
18.19.2 Cache Allocation Technology Architecture 18-51
18.19.3 Code and Data Prioritization (CDP) Technology 18-54
18.19.4 Enabling Cache Allocation Technology Usage Flow 18-55
18.19.4.1 Enumeration and Detection Support of Cache Allocation Technology 18-56
18.19.4.2 Cache Allocation Technology: Resource Type and Capability Enumeration 18-56
18.19.4.3 Cache Allocation Technology: Cache Mask Configuration 18-59
18.19.4.4 Class of Service to Cache Mask Association: Common Across Allocation Features 18-59
18.19.5 Code and Data Prioritization (CDP): Enumerating and Enabling L3 CDP Technology 18-60
18.19.5.1 Mapping Between L3 CDP Masks and CAT Masks 18-60
18.19.6 Code and Data Prioritization (CDP): Enumerating and Enabling L2 CDP Technology 18-61
18.19.6.1 Mapping Between L2 CDP Masks and L2 CAT Masks 18-62
18.19.6.2 Common L2 and L3 CDP Programming Considerations 18-62
18.19.6.3 Cache Allocation Technology Dynamic Configuration 18-62
18.19.6.4 Cache Allocation Technology Operation With Power Saving Features 18-63
18.19.6.5 Cache Allocation Technology Operation with Other Operating Modes 18-63
18.19.6.6 Associating Threads with CAT/CDP Classes of Service 18-63
18.19.7 Introduction to Memory Bandwidth Allocation 18-64
18.19.7.1 Memory Bandwidth Allocation Enumeration 18-65
18.19.7.2 Memory Bandwidth Allocation Configuration 18-66
18.19.7.3 Memory Bandwidth Allocation Usage Considerations 18-67

CHAPTER 19
LAST BRANCH RECORDS

19.1 BEHAVIOR 19-1
19.1.1 Logged Operations 19-1
19.1.2 Configuration 19-2
19.1.2.1 Enabling and Disabling 19-2
19.1.2.2 LBR Depth 19-2
19.1.2.3 Branch Type Enabling and Filtering 19-2
19.1.2.4 Call-Stack Mode 19-3
Call-Stack Mode and LBR Freeze 19-3
19.1.2.5 CPL Filtering 19-4
19.1.3 Record Data 19-4
19.1.3.1 IP Fields 19-4
19.1.3.2 Branch Types 19-4
19.1.3.3 Cycle Time 19-4
19.1.3.4 Mispredict Information 19-5
19.1.3.5 Intel® TSX Information 19-5
19.1.4 Interaction with Other Processor Features 19-5

PAGE

19.1.4.1 SMM 19-5
19.1.4.2 SMM Transfer Monitor (STM) 19-5
19.1.4.3 VMX 19-5
19.1.4.4 Intel® SGX 19-6
19.1.4.5 Debug Exceptions 19-6
19.1.4.6 SMX 19-6
19.1.4.7 MWAIT 19-6
19.1.4.8 Processor Event-Based Sampling (PEBS) 19-6
19.2 MSRS 19-6
19.3 FAST LBR READ ACCESS 19-6
19.4 OTHER IMPACTS 19-7
19.4.1 Branch Trace Store on Intel Atom® Processors 19-7
19.4.2 IA32_DEBUGCTL 19-7
19.4.3 IA32_PERF_CAPABILITIES 19-7

CHAPTER 20
PERFORMANCE MONITORING

20.1 PERFORMANCE MONITORING OVERVIEW 20-1
20.2 ARCHITECTURAL PERFORMANCE MONITORING 20-2
20.2.1 Architectural Performance Monitoring Version 1 20-3
20.2.1.1 Architectural Performance Monitoring Version 1 Facilities 20-3
20.2.1.2 Pre-defined Architectural Performance Events 20-5
20.2.2 Architectural Performance Monitoring Version 2 20-7
20.2.3 Architectural Performance Monitoring Version 3 20-10
20.2.3.1 AnyThread Counting and Software Evolution 20-13
20.2.4 Architectural Performance Monitoring Version 4 20-13
20.2.4.1 Enhancement in IA32_PERF_GLOBAL_STATUS 20-13
20.2.4.2 IA32_PERF_GLOBAL_STATUS_RESET and IA32_PERF_GLOBAL_STATUS_SET MSRS 20-15
20.2.4.3 IA32_PERF_GLOBAL_INUSE MSR 20-15
20.2.5 Architectural Performance Monitoring Version 5 20-17
20.2.5.1 AnyThread Mode Deprecation 20-17
20.2.5.2 Fixed Counter Enumeration 20-17
20.2.5.3 Domain Separation 20-17
20.2.6 Full-Width Writes to Performance Counter Registers 20-17
20.3 PERFORMANCE MONITORING (INTEL® CORE™ PROCESSORS AND INTEL® XEON® PROCESSORS) 20-17
20.3.1 Performance Monitoring for Processors Based on Nehalem Microarchitecture 20-17
20.3.1.1 Enhancements of Performance Monitoring in the Processor Core 20-18
20.3.1.2 Performance Monitoring Facility in the Uncore 20-26
20.3.1.3 Intel® Xeon® Processor 7500 Series Performance Monitoring Facility 20-31
20.3.2 Performance Monitoring for Processors Based on Westmere Microarchitecture 20-32
20.3.3 Intel® Xeon® Processor E7 Family Performance Monitoring Facility 20-33
20.3.4 Performance Monitoring for Processors Based on Sandy Bridge Microarchitecture 20-33
20.3.4.1 Global Counter Control Facilities in Sandy Bridge Microarchitecture 20-34
20.3.4.2 Counter Coalescence 20-36
20.3.4.3 Full Width Writes to Performance Counters 20-36
20.3.4.4 PEBS Support in Sandy Bridge Microarchitecture 20-36
20.3.4.5 Off-core Response Performance Monitoring 20-41
20.3.4.6 Uncore Performance Monitoring Facilities In Intel® Core™ i7-2xxx, Intel® Core™ i5-2xxx, Intel® Core™ i3-2xxx Processor Series 20-44
20.3.4.7 Intel® Xeon® Processor E5 Family Performance Monitoring Facility 20-46
20.3.4.8 Intel® Xeon® Processor E5 Family Uncore Performance Monitoring Facility 20-47
20.3.5 3rd Generation Intel® Core™ Processor Performance Monitoring Facility 20-47
20.3.5.1 Intel® Xeon® Processor E5 v2 and E7 v2 Family Uncore Performance Monitoring Facility 20-47
20.3.6 4th Generation Intel® Core™ Processor Performance Monitoring Facility 20-47
20.3.6.1 Processor Event Based Sampling (PEBS) Facility 20-48
20.3.6.2 PEBS Data Format 20-49
20.3.6.3 PEBS Data Address Profiling 20-50
20.3.6.4 Off-core Response Performance Monitoring 20-51
20.3.6.5 Performance Monitoring and Intel® TSX 20-53
20.3.6.6 Uncore Performance Monitoring Facilities in the 4th Generation Intel® Core™ Processors 20-55
20.3.6.7 Intel® Xeon® Processor E5 v3 Family Uncore Performance Monitoring Facility 20-55
20.3.7 5th Generation Intel® Core™ Processor and Intel® Core™ M Processor Performance Monitoring Facility 20-56
20.3.8 6th Generation, 7th Generation and 8th Generation Intel® Core™ Processor Performance Monitoring Facility 20-57
20.3.8.1 Processor Event Based Sampling (PEBS) Facility 20-58

PAGE

20.3.8.2 Frontend Retired Facility 20-61
20.3.8.3 Off-core Response Performance Monitoring 20-63
20.3.8.4 Uncore Performance Monitoring Facilities on Intel® Core™ Processors Based on Cannon Lake Microarchitecture 20-66
20.3.9 10th Generation Intel® Core™ Processor Performance Monitoring Facility 20-66
20.3.9.1 Processor Event Based Sampling (PEBS) Facility 20-67
20.3.9.2 Off-core Response Performance Monitoring 20-67
20.3.9.3 Performance Metrics 20-69
20.3.10 12th and 13th Generation Intel® Core™ Processors, and 4th Generation Intel® Xeon® Scalable Processor Family Performance Monitoring Facility 20-70
20.3.10.1 P-core Performance Monitoring Unit 20-70
20.3.10.2 E-core Performance Monitoring Unit 20-73
20.3.10.3 Unhalted Reference Cycles 20-75
20.4 PERFORMANCE MONITORING (INTEL® XEON™ PHI PROCESSORS) 20-76
20.4.1 Intel® Xeon Phi™ Processor 7200/5200/3200 Performance Monitoring 20-76
20.4.1.1 Enhancements of Performance Monitoring in the Intel® Xeon Phi™ processor Tile 20-76
20.5 PERFORMANCE MONITORING (INTEL ATOM® PROCESSORS) 20-80
20.5.1 Performance Monitoring (45 nm and 32 nm Intel Atom® Processors) 20-80
20.5.2 Performance Monitoring for Silvermont Microarchitecture 20-80
20.5.2.1 Enhancements of Performance Monitoring in the Processor Core 20-80
20.5.2.2 Offcore Response Event 20-82
20.5.2.3 Average Offcore Request Latency Measurement 20-85
20.5.3 Performance Monitoring for Goldmont Microarchitecture 20-85
20.5.3.1 Processor Event Based Sampling (PEBS) 20-86
20.5.3.2 Offcore Response Event 20-89
20.5.3.3 Average Offcore Request Latency Measurement 20-90
20.5.4 Performance Monitoring for Goldmont Plus Microarchitecture 20-91
20.5.4.1 Extended PEBS 20-91
20.5.5 Performance Monitoring for Tremont Microarchitecture 20-91
20.5.5.1 Adaptive PEBS 20-92
20.5.5.2 PEBS output to Intel® Processor Trace 20-92
20.5.5.3 Precise Distribution Support on Fixed Counter 0 20-94
20.5.5.4 Compatibility Enhancements to Offcore Response MSRs 20-94
20.6 PERFORMANCE MONITORING (LEGACY INTEL PROCESSORS) 20-96
20.6.1 Performance Monitoring (Intel® Core™ Solo and Intel® Core™ Duo Processors) 20-96
20.6.2 Performance Monitoring (Processors Based on Intel® Core™ Microarchitecture) 20-97
20.6.2.1 Fixed-function Performance Counters 20-98
20.6.2.2 Global Counter Control Facilities 20-99
20.6.2.3 At-Retirement Events 20-101
20.6.2.4 Processor Event Based Sampling (PEBS) 20-101
20.6.3 Performance Monitoring (Processors Based on Intel NetBurst® Microarchitecture) 20-104
20.6.3.1 ESCR MSRs 20-107
20.6.3.2 Performance Counters 20-108
20.6.3.3 CCCR MSRs 20-109
20.6.3.4 Debug Store (DS) Mechanism 20-111
20.6.3.5 Programming the Performance Counters for Non-Retirement Events 20-111
20.6.3.6 At-Retirement Counting 20-117
20.6.3.7 Tagging Mechanism for Replay_event 20-118
20.6.3.8 Processor Event-Based Sampling (PEBS) 20-119
20.6.3.9 Operating System Implications 20-120
20.6.4 Performance Monitoring and Intel Hyper-Threading Technology in Processors Based on Intel NetBurst® Microarchitecture 20-120
20.6.4.1 ESCR MSRs 20-120
20.6.4.2 CCCR MSRs 20-121
20.6.4.3 IA32_PEBS_ENABLE MSR 20-123
20.6.4.4 Performance Monitoring Events 20-123
20.6.4.5 Counting Clocks on systems with Intel® Hyper-Threading Technology in Processors Based on Intel NetBurst® Microarchitecture 20-124
20.6.5 Performance Monitoring and Dual-Core Technology 20-125
20.6.6 Performance Monitoring on 64-bit Intel Xeon Processor MP with Up to 8-MByte L3 Cache 20-125
20.6.7 Performance Monitoring on L3 and Caching Bus Controller Sub-Systems 20-127
20.6.7.1 Overview of Performance Monitoring with L3/Caching Bus Controller 20-129
20.6.7.2 GBSQ Event Interface 20-130
20.6.7.3 GSNPQ Event Interface 20-131
20.6.7.4 FSB Event Interface 20-132

PAGE

20.6.7.5 Common Event Control Interface ... 20-133
20.6.8 Performance Monitoring (P6 Family Processor) ... 20-133
20.6.8.1 PerfEvtSel0 and PerfEvtSel1 MSRs ... 20-134
20.6.8.2 PerfCtr0 and PerfCtr1 MSRs ... 20-135
20.6.8.3 Starting and Stopping the Performance-Monitoring Counters ... 20-135
20.6.8.4 Event and Time-Stamp Monitoring Software ... 20-135
20.6.8.5 Monitoring Counter Overflow ... 20-136
20.6.9 Performance Monitoring (Pentium Processors) ... 20-136
20.6.9.1 Control and Event Select Register (CESR) ... 20-137
20.6.9.2 Use of the Performance-Monitoring Pins ... 20-137
20.6.9.3 Events Counted ... 20-138
20.7 COUNTING CLOCKS ... 20-138
20.7.1 Non-Halted Reference Clockticks ... 20-139
20.7.2 Cycle Counting and Opportunistic Processor Operation ... 20-139
20.7.3 Determining the Processor Base Frequency ... 20-140
20.7.3.1 For Intel® Processors Based on Sandy Bridge, Ivy Bridge, Haswell, and Broadwell Microarchitectures ... 20-140
20.7.3.2 For Intel® Processors Based on Nehalem Microarchitecture ... 20-140
20.7.3.3 For Intel Atom® Processors Based on Silvermont Microarchitecture (Including Intel Processors Based on Airmont Microarchitecture) ... 20-140
20.7.3.4 For Intel® Core™ 2 Processor Family and for Intel® Xeon® Processors Based on Intel Core Microarchitecture ... 20-140
20.8 IA32_PERF_CAPABILITIES MSR ENUMERATION ... 20-141
20.8.1 Filtering of SMM Handler Overhead ... 20-142
20.9 PEBS FACILITY ... 20-142
20.9.1 Extended PEBS ... 20-142
20.9.2 Adaptive PEBS ... 20-144
20.9.2.1 Adaptive_Record Counter Control ... 20-145
20.9.2.2 PEBS Record Format ... 20-146
20.9.2.3 MSR_PEBS_DATA_CFG ... 20-150
20.9.2.4 PEBS Record Examples ... 20-151
20.9.3 Precise Distribution of Instructions Retired (PDIR) Facility ... 20-153
20.9.4 Reduced Skid PEBS ... 20-153
20.9.5 EPT-Friendly PEBS ... 20-154
20.9.6 PDist: Precise Distribution ... 20-154
20.9.7 Load Latency Facility ... 20-154
20.9.8 Store Latency Facility ... 20-155

CHAPTER 21
8086 EMULATION

21.1 REAL-ADDRESS MODE ... 21-1
21.1.1 Address Translation in Real-Address Mode ... 21-2
21.1.2 Registers Supported in Real-Address Mode ... 21-3
21.1.3 Instructions Supported in Real-Address Mode ... 21-3
21.1.4 Interrupt and Exception Handling ... 21-4
21.2 VIRTUAL-8086 MODE ... 21-5
21.2.1 Enabling Virtual-8086 Mode ... 21-6
21.2.2 Structure of a Virtual-8086 Task ... 21-7
21.2.3 Paging of Virtual-8086 Tasks ... 21-7
21.2.4 Protection within a Virtual-8086 Task ... 21-8
21.2.5 Entering Virtual-8086 Mode ... 21-8
21.2.6 Leaving Virtual-8086 Mode ... 21-9
21.2.7 Sensitive Instructions ... 21-10
21.2.8 Virtual-8086 Mode I/O ... 21-10
21.2.8.1 I/O-Port-Mapped I/O ... 21-11
21.2.8.2 Memory-Mapped I/O ... 21-11
21.2.8.3 Special I/O Buffers ... 21-11
21.3 INTERRUPT AND EXCEPTION HANDLING IN VIRTUAL-8086 MODE ... 21-11
21.3.1 Class 1—Hardware Interrupt and Exception Handling in Virtual-8086 Mode ... 21-12
21.3.1.1 Handling an Interrupt or Exception Through a Protected-Mode Trap or Interrupt Gate ... 21-12
21.3.1.2 Handling an Interrupt or Exception With an 8086 Program Interrupt or Exception Handler ... 21-14
21.3.1.3 Handling an Interrupt or Exception Through a Task Gate ... 21-14
21.3.2 Class 2—Maskable Hardware Interrupt Handling in Virtual-8086 Mode Using the Virtual Interrupt Mechanism ... 21-15
21.3.3 Class 3—Software Interrupt Handling in Virtual-8086 Mode ... 21-16
21.3.3.1 Method 1: Software Interrupt Handling ... 21-18
21.3.3.2 Methods 2 and 3: Software Interrupt Handling ... 21-18

21.3.3.3 Method 4: Software Interrupt Handling 21-19
21.3.3.4 Method 5: Software Interrupt Handling 21-19
21.3.3.5 Method 6: Software Interrupt Handling 21-19
21.4 PROTECTED-MODE VIRTUAL INTERRUPTS 21-20

CHAPTER 22
MIXING 16-BIT AND 32-BIT CODE

22.1 DEFINING 16-BIT AND 32-BIT PROGRAM MODULES 22-1
22.2 MIXING 16-BIT AND 32-BIT OPERATIONS WITHIN A CODE SEGMENT 22-2
22.3 SHARING DATA AMONG MIXED-SIZE CODE SEGMENTS 22-3
22.4 TRANSFERRING CONTROL AMONG MIXED-SIZE CODE SEGMENTS 22-3
22.4.1 Code-Segment Pointer Size 22-4
22.4.2 Stack Management for Control Transfer 22-4
22.4.2.1 Controlling the Operand-Size Attribute For a Call 22-5
22.4.2.2 Passing Parameters With a Gate 22-6
22.4.3 Interrupt Control Transfers 22-6
22.4.4 Parameter Translation 22-6
22.4.5 Writing Interface Procedures 22-6

CHAPTER 23
ARCHITECTURE COMPATIBILITY

23.1 PROCESSOR FAMILIES AND CATEGORIES 23-1
23.2 RESERVED BITS 23-2
23.3 ENABLING NEW FUNCTIONS AND MODES 23-2
23.4 DETECTING THE PRESENCE OF NEW FEATURES THROUGH SOFTWARE 23-2
23.5 INTEL MMX TECHNOLOGY 23-2
23.6 STREAMING SIMD EXTENSIONS (SSE) 23-3
23.7 STREAMING SIMD EXTENSIONS 2 (SSE2) 23-3
23.8 STREAMING SIMD EXTENSIONS 3 (SSE3) 23-3
23.9 ADDITIONAL STREAMING SIMD EXTENSIONS 23-3
23.10 INTEL HYPER-THREADING TECHNOLOGY 23-3
23.11 MULTI-CORE TECHNOLOGY 23-4
23.12 SPECIFIC FEATURES OF DUAL-CORE PROCESSOR 23-4
23.13 NEW INSTRUCTIONS IN THE PENTIUM AND LATER IA-32 PROCESSORS 23-4
23.13.1 Instructions Added Prior to the Pentium Processor 23-4
23.14 OBSOLETE INSTRUCTIONS 23-5
23.15 UNDEFINED OPCODES 23-5
23.16 NEW FLAGS IN THE EFLAGS REGISTER 23-6
23.16.1 Using EFLAGS Flags to Distinguish Between 32-Bit IA-32 Processors 23-6
23.17 STACK OPERATIONS AND USER SOFTWARE 23-7
23.17.1 PUSH SP 23-7
23.17.2 EFLAGS Pushed on the Stack 23-7
23.18 X87 FPU 23-7
23.18.1 Control Register CR0 Flags 23-8
23.18.2 x87 FPU Status Word 23-8
23.18.2.1 Condition Code Flags (C0 through C3) 23-8
23.18.2.2 Stack Fault Flag 23-8
23.18.3 x87 FPU Control Word 23-9
23.18.4 x87 FPU Tag Word 23-9
23.18.5 Data Types 23-9
23.18.5.1 NaNs 23-9
23.18.5.2 Pseudo-zero, Pseudo-NaN, Pseudo-infinity, and Unnormal Formats 23-9
23.18.6 Floating-Point Exceptions 23-10
23.18.6.1 Denormal Operand Exception (#D) 23-10
23.18.6.2 Numeric Overflow Exception (#O) 23-10
23.18.6.3 Numeric Underflow Exception (#U) 23-10
23.18.6.4 Exception Precedence 23-10
23.18.6.5 CS and EIP For FPU Exceptions 23-11
23.18.6.6 FPU Error Signals 23-11
23.18.6.7 Assertion of the FERR# Pin 23-11
23.18.6.8 Invalid Operation Exception On Denormals 23-11
23.18.6.9 Alignment Check Exceptions (#AC) 23-11

PAGE

23.18.6.10 Segment Not Present Exception During FLDENV 23-12
23.18.6.11 Device Not Available Exception (#NM) 23-12
23.18.6.12 Coprocessor Segment Overrun Exception 23-12
23.18.6.13 General Protection Exception (#GP) 23-12
23.18.6.14 Floating-Point Error Exception (#MF) 23-12
23.18.7 Changes to Floating-Point Instructions 23-12
23.18.7.1 FDIV, FPREM, and FSQRT Instructions 23-12
23.18.7.2 FSCALE Instruction 23-12
23.18.7.3 FPREM1 Instruction 23-13
23.18.7.4 FPREM Instruction 23-13
23.18.7.5 FUCOM, FUCOMP, and FUCOMPP Instructions 23-13
23.18.7.6 FPTAN Instruction 23-13
23.18.7.7 Stack Overflow 23-13
23.18.7.8 FSIN, FCOS, and FSINCOS Instructions 23-13
23.18.7.9 FPATAN Instruction 23-13
23.18.7.10 F2XM1 Instruction 23-13
23.18.7.11 FLD Instruction 23-14
23.18.7.12 FXTRACT Instruction 23-14
23.18.7.13 Load Constant Instructions 23-14
23.18.7.14 FXAM Instruction 23-14
23.18.7.15 FSAVE and FSTENV Instructions 23-14
23.18.8 Transcendental Instructions 23-14
23.18.9 Obsolete Instructions and Undefined Opcodes 23-15
23.18.10 WAIT/FWAIT Prefix Differences 23-15
23.18.11 Operands Split Across Segments and/or Pages 23-15
23.18.12 FPU Instruction Synchronization 23-15
23.19 SERIALIZING INSTRUCTIONS 23-16
23.20 FPU AND MATH COPROCESSOR INITIALIZATION 23-16
23.20.1 Intel® 387 and Intel® 287 Math Coprocessor Initialization 23-16
23.20.2 Intel486 SX Processor and Intel 487 SX Math Coprocessor Initialization 23-16
23.21 CONTROL REGISTERS 23-17
23.22 MEMORY MANAGEMENT FACILITIES 23-19
23.22.1 New Memory Management Control Flags 23-19
23.22.1.1 Physical Memory Addressing Extension 23-19
23.22.1.2 Global Pages 23-19
23.22.1.3 Larger Page Sizes 23-19
23.22.2 CD and NW Cache Control Flags 23-19
23.22.3 Descriptor Types and Contents 23-19
23.22.4 Changes in Segment Descriptor Loads 23-20
23.23 DEBUG FACILITIES 23-20
23.23.1 Differences in Debug Register DR6 23-20
23.23.2 Differences in Debug Register DR7 23-20
23.23.3 Debug Registers DR4 and DR5 23-20
23.24 RECOGNITION OF BREAKPOINTS 23-20
23.25 EXCEPTIONS AND/OR EXCEPTION CONDITIONS 23-21
23.25.1 Machine-Check Architecture 23-22
23.25.2 Priority of Exceptions 23-22
23.25.3 Exception Conditions of Legacy SIMD Instructions Operating on MMX Registers 23-22
23.26 INTERRUPTS 23-27
23.26.1 Interrupt Propagation Delay 23-27
23.26.2 NMI Interrupts 23-27
23.26.3 IDT Limit 23-27
23.27 ADVANCED PROGRAMMABLE INTERRUPT CONTROLLER (APIC) 23-27
23.27.1 Software Visible Differences Between the Local APIC and the 82489DX 23-28
23.27.2 New Features Incorporated in the Local APIC for the P6 Family and Pentium Processors 23-28
23.27.3 New Features Incorporated in the Local APIC of the Pentium 4 and Intel Xeon Processors 23-28
23.28 TASK SWITCHING AND TSS 23-28
23.28.1 P6 Family and Pentium Processor TSS 23-29
23.28.2 TSS Selector Writes 23-29
23.28.3 Order of Reads/Writes to the TSS 23-29
23.28.4 Using A 16-Bit TSS with 32-Bit Constructs 23-29
23.28.5 Differences in I/O Map Base Addresses 23-29
23.29 CACHE MANAGEMENT 23-30
23.29.1 Self-Modifying Code with Cache Enabled 23-30
23.29.2 Disabling the L3 Cache 23-31

PAGE

23.30 PAGING 23-31
23.30.1 Large Pages 23-31
23.30.2 PCD and PWT Flags 23-31
23.30.3 Enabling and Disabling Paging 23-32
23.31 STACK OPERATIONS AND SUPERVISOR SOFTWARE 23-32
23.31.1 Selector Pushes and Pops 23-32
23.31.2 Error Code Pushes 23-32
23.31.3 Fault Handling Effects on the Stack 23-33
23.31.4 Interlevel RET/IRET From a 16-Bit Interrupt or Call Gate 23-33
23.32 MIXING 16- AND 32-BIT SEGMENTS 23-33
23.33 SEGMENT AND ADDRESS WRAPAROUND 23-33
23.33.1 Segment Wraparound 23-34
23.34 STORE BUFFERS AND MEMORY ORDERING 23-34
23.35 BUS LOCKING 23-35
23.36 BUS HOLD 23-35
23.37 MODEL-SPECIFIC EXTENSIONS TO THE IA-32 23-35
23.37.1 Model-Specific Registers 23-36
23.37.2 RDMSR and WRMSR Instructions 23-36
23.37.3 Memory Type Range Registers 23-36
23.37.4 Machine-Check Exception and Architecture 23-36
23.37.5 Performance-Monitoring Counters 23-37
23.38 TWO WAYS TO RUN INTEL 286 PROCESSOR TASKS 23-37
23.39 INITIAL STATE OF PENTIUM, PENTIUM PRO AND PENTIUM 4 PROCESSORS 23-37

CHAPTER 24
INTRODUCTION TO VIRTUAL MACHINE EXTENSIONS

24.1 OVERVIEW 24-1
24.2 VIRTUAL MACHINE ARCHITECTURE 24-1
24.3 INTRODUCTION TO VMX OPERATION 24-1
24.4 LIFE CYCLE OF VMM SOFTWARE 24-2
24.5 VIRTUAL-MACHINE CONTROL STRUCTURE 24-2
24.6 DISCOVERING SUPPORT FOR VMX 24-2
24.7 ENABLING AND ENTERING VMX OPERATION 24-3
24.8 RESTRICTIONS ON VMX OPERATION 24-3

CHAPTER 25
VIRTUAL MACHINE CONTROL STRUCTURES

25.1 OVERVIEW 25-1
25.2 FORMAT OF THE VMCS REGION 25-2
25.3 ORGANIZATION OF VMCS DATA 25-3
25.4 GUEST-STATE AREA 25-4
25.4.1 Guest Register State 25-4
25.4.2 Guest Non-Register State 25-6
25.5 HOST-STATE AREA 25-8
25.6 VM-EXECUTION CONTROL FIELDS 25-9
25.6.1 Pin-Based VM-Execution Controls 25-9
25.6.2 Processor-Based VM-Execution Controls 25-10
25.6.3 Exception Bitmap 25-13
25.6.4 I/O-Bitmap Addresses 25-14
25.6.5 Time-Stamp Counter Offset and Multiplier 25-14
25.6.6 Guest/Host Masks and Read Shadows for CR0 and CR4 25-14
25.6.7 CR3-Target Controls 25-14
25.6.8 Controls for APIC Virtualization 25-14
25.6.9 MSR-Bitmap Address 25-16
25.6.10 Executive-VMCS Pointer 25-16
25.6.11 Extended-Page-Table Pointer (EPTP) 25-16
25.6.12 Virtual-Processor Identifier (VPID) 25-17
25.6.13 Controls for PAUSE-Loop Exiting 25-17
25.6.14 VM-Function Controls 25-17
25.6.15 VMCS Shadowing Bitmap Addresses 25-18
25.6.16 ENCLS-Exiting Bitmap 25-18
25.6.17 ENCLV-Exiting Bitmap 25-18

PAGE

25.6.18 PCONFIG-Exiting Bitmap. . . . 25-18
25.6.19 Control Field for Page-Modification Logging . . . 25-18
25.6.20 Controls for Virtualization Exceptions. . . . 25-19
25.6.21 XSS-Exiting Bitmap . . . 25-19
25.6.22 Sub-Page-Permission-Table Pointer (SPPTP) . . . 25-19
25.6.23 Fields Related to Hypervisor-Managed Linear-Address Translation . . . 25-19
25.6.24 Fields Related to PASID Translation. . . . 25-20
25.7 VM-EXIT CONTROL FIELDS . . . 25-20
25.7.1 VM-Exit Controls. . . . 25-20
25.7.2 VM-Exit Controls for MSRs . . . 25-22
25.8 VM-ENTRY CONTROL FIELDS . . . 25-22
25.8.1 VM-Entry Controls . . . 25-23
25.8.2 VM-Entry Controls for MSRs. . . . 25-24
25.8.3 VM-Entry Controls for Event Injection. . . . 25-24
25.9 VM-EXIT INFORMATION FIELDS. . . . 25-25
25.9.1 Basic VM-Exit Information. . . . 25-25
25.9.2 Information for VM Exits Due to Vectored Events . . . 25-26
25.9.3 Information for VM Exits That Occur During Event Delivery . . . 25-27
25.9.4 Information for VM Exits Due to Instruction Execution. . . . 25-27
25.9.5 VM-Instruction Error Field . . . 25-28
25.10 VMCS TYPES: ORDINARY AND SHADOW. . . . 25-28
25.11 SOFTWARE USE OF THE VMCS AND RELATED STRUCTURES . . . 25-28
25.11.1 Software Use of Virtual-Machine Control Structures. . . . 25-28
25.11.2 VMREAD, VMWRITE, and Encodings of VMCS Fields . . . 25-29
25.11.3 Initializing a VMCS . . . 25-31
25.11.4 Software Access to Related Structures . . . 25-31
25.11.5 VMXON Region . . . 25-32

CHAPTER 26
VMX NON-ROOT OPERATION

26.1 INSTRUCTIONS THAT CAUSE VM EXITS . . . 26-1
26.1.1 Relative Priority of Faults and VM Exits. . . . 26-1
26.1.2 Instructions That Cause VM Exits Unconditionally . . . 26-2
26.1.3 Instructions That Cause VM Exits Conditionally . . . 26-2
26.2 OTHER CAUSES OF VM EXITS. . . . 26-5
26.3 CHANGES TO INSTRUCTION BEHAVIOR IN VMX NON-ROOT OPERATION . . . 26-7
26.4 OTHER CHANGES IN VMX NON-ROOT OPERATION. . . . 26-12
26.4.1 Event Blocking. . . . 26-12
26.4.2 Treatment of Task Switches . . . 26-12
26.5 FEATURES SPECIFIC TO VMX NON-ROOT OPERATION. . . . 26-13
26.5.1 VMX-Preemption Timer . . . 26-13
26.5.2 Monitor Trap Flag. . . . 26-14
26.5.3 Translation of Guest-Physical Addresses Using EPT. . . . 26-15
26.5.4 Translation of Guest-Physical Addresses Used by Intel Processor Trace . . . 26-15
26.5.4.1 Guest-Physical Address Translation for Intel PT: Details. . . . 26-15
26.5.4.2 Trace-Address Pre-Translation (TAPT). . . . 26-16
26.5.5 APIC Virtualization. . . . 26-16
26.5.6 VM Functions. . . . 26-16
26.5.6.1 Enabling VM Functions . . . 26-16
26.5.6.2 General Operation of the VMFUNC Instruction. . . . 26-17
26.5.6.3 EPTP Switching. . . . 26-17
26.5.7 Virtualization Exceptions. . . . 26-18
26.5.7.1 Convertible EPT Violations . . . 26-19
26.5.7.2 Virtualization-Exception Information. . . . 26-19
26.5.7.3 Delivery of Virtualization Exceptions . . . 26-20
26.5.8 PASID Translation . . . 26-20
26.6 UNRESTRICTED GUESTS . . . 26-21

CHAPTER 27
VM ENTRIES

27.1 BASIC VM-ENTRY CHECKS. . . . 27-2
27.2 CHECKS ON VMX CONTROLS AND HOST-STATE AREA . . . 27-2

27.2.1 Checks on VMX Controls . . . 27-2
27.2.1.1 VM-Execution Control Fields . . . 27-2
27.2.1.2 VM-Exit Control Fields . . . 27-6
27.2.1.3 VM-Entry Control Fields . . . 27-6
27.2.2 Checks on Host Control Registers, MSRs, and SSP . . . 27-7
27.2.3 Checks on Host Segment and Descriptor-Table Registers . . . 27-8
27.2.4 Checks Related to Address-Space Size . . . 27-8
27.3 CHECKING AND LOADING GUEST STATE . . . 27-9
27.3.1 Checks on the Guest State Area . . . 27-9
27.3.1.1 Checks on Guest Control Registers, Debug Registers, and MSRs . . . 27-9
27.3.1.2 Checks on Guest Segment Registers . . . 27-11
27.3.1.3 Checks on Guest Descriptor-Table Registers . . . 27-13
27.3.1.4 Checks on Guest RIP, RFLAGS, and SSP . . . 27-13
27.3.1.5 Checks on Guest Non-Register State . . . 27-13
27.3.1.6 Checks on Guest Page-Directory-Pointer-Table Entries . . . 27-15
27.3.2 Loading Guest State . . . 27-16
27.3.2.1 Loading Guest Control Registers, Debug Registers, and MSRs . . . 27-16
27.3.2.2 Loading Guest Segment Registers and Descriptor-Table Registers . . . 27-17
27.3.2.3 Loading Guest RIP, RSP, RFLAGS, and SSP . . . 27-18
27.3.2.4 Loading Page-Directory-Pointer-Table Entries . . . 27-18
27.3.2.5 Updating Non-Register State . . . 27-19
27.3.3 Clearing Address-Range Monitoring . . . 27-19
27.4 LOADING MSRS . . . 27-19
27.5 TRACE-ADDRESS PRE-TRANSLATION (TAPT) . . . 27-20
27.6 EVENT INJECTION . . . 27-20
27.6.1 Vectored-Event Injection . . . 27-20
27.6.1.1 Details of Vectored-Event Injection . . . 27-21
27.6.1.2 VM Exits During Event Injection . . . 27-22
27.6.1.3 Event Injection for VM Entries to Real-Address Mode . . . 27-23
27.6.2 Injection of Pending MTF VM Exits . . . 27-23
27.7 SPECIAL FEATURES OF VM ENTRY . . . 27-23
27.7.1 Interruptibility State . . . 27-23
27.7.2 Activity State . . . 27-24
27.7.3 Delivery of Pending Debug Exceptions after VM Entry . . . 27-24
27.7.4 VMX-Preemption Timer . . . 27-25
27.7.5 Interrupt-Window Exiting and Virtual-Interrupt Delivery . . . 27-25
27.7.6 NMI-Window Exiting . . . 27-26
27.7.7 VM Exits Induced by the TPR Threshold . . . 27-26
27.7.8 Pending MTF VM Exits . . . 27-26
27.7.9 VM Entries and Advanced Debugging Features . . . 27-27
27.7.10 User-Interrupt Recognition After VM Entry . . . 27-27
27.8 VM-ENTRY FAILURES DURING OR AFTER LOADING GUEST STATE . . . 27-27
27.9 MACHINE-CHECK EVENTS DURING VM ENTRY . . . 27-28

CHAPTER 28
VM EXITS

28.1 ARCHITECTURAL STATE BEFORE A VM EXIT . . . 28-1
28.2 RECORDING VM-EXIT INFORMATION AND UPDATING VM-ENTRY CONTROL FIELDS . . . 28-4
28.2.1 Basic VM-Exit Information . . . 28-4
28.2.2 Information for VM Exits Due to Vectored Events . . . 28-11
28.2.3 Information About NMI Unblocking Due to IRET . . . 28-12
28.2.4 Information for VM Exits During Event Delivery . . . 28-13
28.2.5 Information for VM Exits Due to Instruction Execution . . . 28-14
28.3 SAVING GUEST STATE . . . 28-22
28.3.1 Saving Control Registers, Debug Registers, and MSRs . . . 28-22
28.3.2 Saving Segment Registers and Descriptor-Table Registers . . . 28-23
28.3.3 Saving RIP, RSP, RFLAGS, and SSP . . . 28-23
28.3.4 Saving Non-Register State . . . 28-25
28.4 SAVING MSRS . . . 28-27
28.5 LOADING HOST STATE . . . 28-27
28.5.1 Loading Host Control Registers, Debug Registers, MSRs . . . 28-28
28.5.2 Loading Host Segment and Descriptor-Table Registers . . . 28-29
28.5.3 Loading Host RIP, RSP, RFLAGS, and SSP . . . 28-30
28.5.4 Checking and Loading Host Page-Directory-Pointer-Table Entries . . . 28-30

PAGE

28.5.5 Updating Non-Register State 28-31
28.5.6 Clearing Address-Range Monitoring 28-31
28.6 LOADING MSRS 28-31
28.7 VMX ABORTS 28-32
28.8 MACHINE-CHECK EVENTS DURING VM EXIT 28-33
28.9 USER-INTERRUPT RECOGNITION AFTER VM EXIT 28-33

CHAPTER 29
VMX SUPPORT FOR ADDRESS TRANSLATION
29.1 VIRTUAL PROCESSOR IDENTIFIERS (VPIDS) 29-1
29.2 HYPERVISOR-MANAGED LINEAR-ADDRESS TRANSLATION (HLAT) 29-1
29.3 THE EXTENDED PAGE TABLE MECHANISM (EPT) 29-1
29.3.1 EPT Overview 29-2
29.3.2 EPT Translation Mechanism 29-3
29.3.3 EPT-Induced VM Exits 29-9
29.3.3.1 EPT Misconfigurations 29-9
29.3.3.2 EPT Violations 29-11
29.3.3.3 Prioritization of EPT Misconfigurations and EPT Violations 29-14
29.3.4 Sub-Page Write Permissions 29-15
29.3.4.1 Write Accesses That Are Eligible for Sub-Page Write Permissions 29-15
29.3.4.2 Determining an Access's Sub-Page Write Permission 29-16
29.3.5 Accessed and Dirty Flags for EPT 29-17
29.3.6 Page-Modification Logging 29-18
29.3.7 EPT and Memory Typing 29-18
29.3.7.1 Memory Type Used for Accessing EPT Paging Structures 29-18
29.3.7.2 Memory Type Used for Translated Guest-Physical Addresses 29-18
29.4 CACHING TRANSLATION INFORMATION 29-19
29.4.1 Information That May Be Cached 29-19
29.4.2 Creating and Using Cached Translation Information 29-20
29.4.3 Invalidating Cached Translation Information 29-21
29.4.3.1 Operations that Invalidate Cached Mappings 29-21
29.4.3.2 Operations that Need Not Invalidate Cached Mappings 29-22
29.4.3.3 Guidelines for Use of the INVVPID Instruction 29-23
29.4.3.4 Guidelines for Use of the INVEPT Instruction 29-24

CHAPTER 30
APIC VIRTUALIZATION AND VIRTUAL INTERRUPTS
30.1 VIRTUAL APIC STATE 30-1
30.1.1 Virtualized APIC Registers 30-2
30.1.2 TPR Virtualization 30-2
30.1.3 PPR Virtualization 30-2
30.1.4 EOI Virtualization 30-3
30.1.5 Self-IPI Virtualization 30-3
30.1.6 IPI Virtualization 30-3
30.2 EVALUATION AND DELIVERY OF VIRTUAL INTERRUPTS 30-4
30.2.1 Evaluation of Pending Virtual Interrupts 30-4
30.2.2 Virtual-Interrupt Delivery 30-5
30.2.3 Virtualizing User-Interrupt Notifications 30-6
30.3 VIRTUALIZING CR8-BASED TPR ACCESSES 30-6
30.4 VIRTUALIZING MEMORY-MAPPED APIC ACCESSES 30-6
30.4.1 Priority of APIC-Access VM Exits 30-7
30.4.2 Virtualizing Reads from the APIC-Access Page 30-8
30.4.3 Virtualizing Writes to the APIC-Access Page 30-9
30.4.3.1 Determining Whether a Write Access is Virtualized 30-9
30.4.3.2 APIC-Write Emulation 30-10
30.4.3.3 APIC-Write VM Exits 30-11
30.4.4 Instruction-Specific Considerations 30-11
30.4.5 Issues Pertaining to Page Size and TLB Management 30-12
30.4.6 APIC Accesses Not Directly Resulting From Linear Addresses 30-12
30.4.6.1 Guest-Physical Accesses to the APIC-Access Page 30-13
30.4.6.2 Physical Accesses to the APIC-Access Page 30-13
30.5 VIRTUALIZING MSR-BASED APIC ACCESSES 30-14

30.6 POSTED-INTERRUPT PROCESSING 30-15
30.7 VIRTUALIZING SENDUIPI 30-16

CHAPTER 31
VMX INSTRUCTION REFERENCE

31.1 OVERVIEW 31-1
31.2 CONVENTIONS 31-2
31.3 VMX INSTRUCTIONS 31-2
INVEPT— Invalidate Translations Derived from EPT 31-3
INVVPID— Invalidate Translations Based on VPID 31-6
VMCALL—Call to VM Monitor 31-9
VMCLEAR—Clear Virtual-Machine Control Structure 31-11
VMFUNC—Invoke VM function. 31-13
VMLAUNCH/VMRESUME—Launch/Resume Virtual Machine 31-14
VMPTRLD—Load Pointer to Virtual-Machine Control Structure 31-17
VMPTRST—Store Pointer to Virtual-Machine Control Structure 31-19
VMREAD—Read Field from Virtual-Machine Control Structure 31-21
VMRESUME—Resume Virtual Machine 31-23
VMWRITE—Write Field to Virtual-Machine Control Structure 31-24
VMXOFF—Leave VMX Operation 31-26
VMXON—Enter VMX Operation. 31-28
31.4 VM INSTRUCTION ERROR NUMBERS 31-31

CHAPTER 32
SYSTEM MANAGEMENT MODE

32.1 SYSTEM MANAGEMENT MODE OVERVIEW. 32-1
32.1.1 System Management Mode and VMX Operation 32-2
32.2 SYSTEM MANAGEMENT INTERRUPT (SMI). 32-2
32.3 SWITCHING BETWEEN SMM AND THE OTHER PROCESSOR OPERATING MODES. 32-2
32.3.1 Entering SMM 32-2
32.3.2 Exiting From SMM 32-3
32.4 SMRAM 32-4
32.4.1 SMRAM State Save Map. 32-4
32.4.1.1 SMRAM State Save Map and Intel 64 Architecture. 32-6
32.4.2 SMRAM Caching 32-8
32.4.2.1 System Management Range Registers (SMRR) 32-9
32.5 SMI HANDLER EXECUTION ENVIRONMENT 32-9
32.5.1 Initial SMM Execution Environment 32-9
32.5.2 SMI Handler Operating Mode Switching 32-10
32.5.3 Control-flow Enforcement Technology Interactions. 32-11
32.6 EXCEPTIONS AND INTERRUPTS WITHIN SMM 32-11
32.7 MANAGING SYNCHRONOUS AND ASYNCHRONOUS SYSTEM MANAGEMENT INTERRUPTS. 32-12
32.7.1 I/O State Implementation 32-12
32.8 NMI HANDLING WHILE IN SMM. 32-13
32.9 SMM REVISION IDENTIFIER 32-13
32.10 AUTO HALT RESTART 32-14
32.10.1 Executing the HLT Instruction in SMM 32-14
32.11 SMBASE RELOCATION 32-14
32.12 I/O INSTRUCTION RESTART 32-15
32.12.1 Back-to-Back SMI Interrupts When I/O Instruction Restart Is Being Used 32-16
32.13 SMM MULTIPLE-PROCESSOR CONSIDERATIONS 32-16
32.14 DEFAULT TREATMENT OF SMIS AND SMM WITH VMX OPERATION AND SMX OPERATION 32-16
32.14.1 Default Treatment of SMI Delivery 32-17
32.14.2 Default Treatment of RSM 32-18
32.14.3 Protection of CR4.VMXE in SMM. 32-19
32.14.4 VMXOFF and SMI Unblocking 32-19
32.15 DUAL-MONITOR TREATMENT OF SMIs AND SMM 32-19
32.15.1 Dual-Monitor Treatment Overview 32-19
32.15.2 SMM VM Exits 32-20
32.15.2.1 Architectural State Before a VM Exit 32-20
32.15.2.2 Updating the Current-VMCS and Executive-VMCS Pointers. 32-20

PAGE

32.15.2.3 Recording VM-Exit Information 32-20
32.15.2.4 Saving Guest State 32-21
32.15.2.5 Updating State 32-21
32.15.3 Operation of the SMM-Transfer Monitor 32-22
32.15.4 VM Entries that Return from SMM 32-22
32.15.4.1 Checks on the Executive-VMCS Pointer Field 32-22
32.15.4.2 Checks on VM-Execution Control Fields 32-22
32.15.4.3 Checks on VM-Entry Control Fields 32-23
32.15.4.4 Checks on the Guest State Area 32-23
32.15.4.5 Loading Guest State 32-23
32.15.4.6 VMX-Preemption Timer 32-23
32.15.4.7 Updating the Current-VMCS and SMM-Transfer VMCS Pointers 32-24
32.15.4.8 VM Exits Induced by VM Entry 32-24
32.15.4.9 SMI Blocking 32-24
32.15.4.10 Failures of VM Entries That Return from SMM 32-24
32.15.5 Enabling the Dual-Monitor Treatment 32-25
32.15.6 Activating the Dual-Monitor Treatment 32-26
32.15.6.1 Initial Checks 32-26
32.15.6.2 Updating the Current-VMCS and Executive-VMCS Pointers 32-27
32.15.6.3 Saving Guest State 32-27
32.15.6.4 Saving MSRs 32-27
32.15.6.5 Loading Host State 32-27
32.15.6.6 Loading MSRs 32-29
32.15.7 Deactivating the Dual-Monitor Treatment 32-29
32.16 SMI AND PROCESSOR EXTENDED STATE MANAGEMENT 32-29
32.17 MODEL-SPECIFIC SYSTEM MANAGEMENT ENHANCEMENT 32-29
32.17.1 SMM Handler Code Access Control 32-30
32.17.2 SMI Delivery Delay Reporting 32-30
32.17.3 Blocked SMI Reporting 32-30

CHAPTER 33
INTEL® PROCESSOR TRACE

33.1 OVERVIEW 33-1
33.1.1 Features and Capabilities 33-1
33.1.1.1 Packet Summary 33-1
33.2 INTEL® PROCESSOR TRACE OPERATIONAL MODEL 33-2
33.2.1 Change of Flow Instruction (COFI) Tracing 33-2
33.2.1.1 Direct Transfer COFI 33-3
33.2.1.2 Indirect Transfer COFI 33-3
33.2.1.3 Far Transfer COFI 33-4
33.2.2 Software Trace Instrumentation with PTWRITE 33-4
33.2.3 Power Event Tracing 33-4
33.2.4 Event Tracing 33-5
33.2.5 Trace Filtering 33-5
33.2.5.1 Filtering by Current Privilege Level (CPL) 33-5
33.2.5.2 Filtering by CR3 33-5
33.2.5.3 Filtering by IP 33-6
33.2.6 Packet Generation Enable Controls 33-7
33.2.6.1 Packet Enable (PacketEn) 33-7
33.2.6.2 Trigger Enable (TriggerEn) 33-8
33.2.6.3 Context Enable (ContextEn) 33-8
33.2.6.4 Branch Enable (BranchEn) 33-8
33.2.6.5 Filter Enable (FilterEn) 33-8
33.2.7 Trace Output 33-9
33.2.7.1 Single Range Output 33-9
33.2.7.2 Table of Physical Addresses (ToPA) 33-10
Single Output Region ToPA Implementation 33-12
ToPA Table Entry Format 33-12
ToPA STOP 33-13
ToPA PMI 33-13
PMI Preservation 33-14
ToPA PMI and Single Output Region ToPA Implementation 33-14
ToPA PMI and XSAVES/XRSTORS State Handling 33-15

ToPA Errors . . . 33-15
33.2.7.3 Trace Transport Subsystem . . . 33-16
33.2.7.4 Restricted Memory Access . . . 33-16
Modifications to Restricted Memory Regions . . . 33-16
33.2.8 Enabling and Configuration MSRs . . . 33-17
33.2.8.1 General Considerations . . . 33-17
33.2.8.2 IA32_RTIT_CTL MSR . . . 33-17
33.2.8.3 Enabling and Disabling Packet Generation with TraceEn . . . 33-20
Disabling Packet Generation . . . 33-21
Other Writes to IA32_RTIT_CTL . . . 33-21
33.2.8.4 IA32_RTIT_STATUS MSR . . . 33-21
33.2.8.5 IA32_RTIT_ADDRn_A and IA32_RTIT_ADDRn_B MSRs . . . 33-22
33.2.8.6 IA32_RTIT_CR3_MATCH MSR . . . 33-22
33.2.8.7 IA32_RTIT_OUTPUT_BASE MSR . . . 33-23
33.2.8.8 IA32_RTIT_OUTPUT_MASK_PTRS MSR . . . 33-23
33.2.9 Interaction of Intel® Processor Trace and Other Processor Features . . . 33-24
33.2.9.1 Intel® Transactional Synchronization Extensions (Intel® TSX) . . . 33-24
33.2.9.2 TSX and IP Filtering . . . 33-25
33.2.9.3 System Management Mode (SMM) . . . 33-25
33.2.9.4 Virtual-Machine Extensions (VMX) . . . 33-26
33.2.9.5 Intel® Software Guard Extensions (Intel® SGX) . . . 33-26
33.2.9.6 SENTER/ENTERACCS and ACM . . . 33-26
33.2.9.7 Intel® Memory Protection Extensions (Intel® MPX) . . . 33-26
33.3 CONFIGURATION AND PROGRAMMING GUIDELINE . . . 33-26
33.3.1 Detection of Intel Processor Trace and Capability Enumeration . . . 33-26
33.3.1.1 Packet Decoding of RIP versus LIP . . . 33-30
33.3.1.2 Model Specific Capability Restrictions . . . 33-30
33.3.2 Enabling and Configuration of Trace Packet Generation . . . 33-30
33.3.2.1 Enabling Packet Generation . . . 33-30
33.3.2.2 Disabling Packet Generation . . . 33-31
33.3.3 Flushing Trace Output . . . 33-31
33.3.4 Warm Reset . . . 33-31
33.3.5 Context Switch Consideration . . . 33-31
33.3.5.1 Manual Trace Configuration Context Switch . . . 33-31
33.3.5.2 Trace Configuration Context Switch Using XSAVES/XRSTORS . . . 33-32
33.3.6 Cycle-Accurate Mode . . . 33-32
33.3.6.1 Cycle Counter . . . 33-33
33.3.6.2 Cycle Packet Semantics . . . 33-33
33.3.6.3 Cycle Thresholds . . . 33-33
33.3.7 Decoder Synchronization (PSB+) . . . 33-34
33.3.8 Internal Buffer Overflow . . . 33-35
33.3.8.1 Overflow Impact on Enables . . . 33-35
33.3.8.2 Overflow Impact on Timing Packets . . . 33-35
33.3.9 TNT Disable . . . 33-36
33.3.10 Operational Errors . . . 33-36
33.4 TRACE PACKETS AND DATA TYPES . . . 33-36
33.4.1 Packet Relationships and Ordering . . . 33-36
33.4.1.1 Packet Blocks . . . 33-37
Decoder Implications . . . 33-37
33.4.2 Packet Definitions . . . 33-38
33.4.2.1 Taken/Not-taken (TNT) Packet . . . 33-39
33.4.2.2 Target IP (TIP) Packet . . . 33-40
IP Compression . . . 33-40
Indirect Transfer Compression for Returns (RET) . . . 33-41
33.4.2.3 Deferred TIPs . . . 33-42
33.4.2.4 Packet Generation Enable (TIP.PGE) Packet . . . 33-43
33.4.2.5 Packet Generation Disable (TIP.PGD) Packet . . . 33-44
33.4.2.6 Flow Update (FUP) Packet . . . 33-45
FUP IP Payload . . . 33-45
33.4.2.7 Paging Information (PIP) Packet . . . 33-47
33.4.2.8 MODE Packets . . . 33-47
MODE.Exec Packet . . . 33-48
MODE.TSX Packet . . . 33-49
33.4.2.9 TraceStop Packet . . . 33-50

PAGE

33.4.2.10 Core:Bus Ratio (CBR) Packet....33-50
33.4.2.11 Timestamp Counter (TSC) Packet....33-51
33.4.2.12 Mini Time Counter (MTC) Packet....33-52
33.4.2.13 TSC/MTC Alignment (TMA) Packet....33-53
33.4.2.14 Cycle Count (CYC) Packet....33-54
33.4.2.15 VMCS Packet....33-55
33.4.2.16 Overflow (OVF) Packet....33-56
33.4.2.17 Packet Stream Boundary (PSB) Packet....33-56
33.4.2.18 PSBEND Packet....33-57
33.4.2.19 Maintenance (MNT) Packet....33-58
33.4.2.20 PAD Packet....33-58
33.4.2.21 PTWRITE (PTW) Packet....33-59
33.4.2.22 Execution Stop (EXSTOP) Packet....33-60
33.4.2.23 MWAIT Packet....33-61
33.4.2.24 Power Entry (PWRE) Packet....33-62
33.4.2.25 Power Exit (PWRX) Packet....33-63
33.4.2.26 Block Begin Packet (BBP)....33-64
33.4.2.27 Block Item Packet (BIP)....33-65
BIP State Value Encodings....33-65
33.4.2.28 Block End Packet (BEP)....33-70
33.4.2.29 Control Flow Event (CFE) Packet....33-71
CFE Packet Type and Vector Fields....33-71
33.4.2.30 Event Data (EVD) Packet....33-73
33.5 TRACING IN VMX OPERATION....33-73
33.5.1 VMX-Specific Packets and VMCS Controls....33-74
33.5.2 Managing Trace Packet Generation Across VMX Transitions....33-74
33.5.2.1 System-Wide Tracing....33-75
33.5.2.2 Guest-Only Tracing....33-75
33.5.2.3 Emulation of Intel PT Traced State....33-76
33.5.2.4 TSC Scaling....33-76
33.5.2.5 Failed VM Entry....33-76
33.5.2.6 VMX Abort....33-77
33.6 TRACING AND SMM TRANSFER MONITOR (STM)....33-77
33.7 PACKET GENERATION SCENARIOS....33-77
33.8 SOFTWARE CONSIDERATIONS....33-81
33.8.1 Tracing SMM Code....33-81
33.8.2 Cooperative Transition of Multiple Trace Collection Agents....33-81
33.8.3 Tracking Time....33-81
33.8.3.1 Time Domain Relationships....33-82
33.8.3.2 Estimating TSC within Intel PT....33-82
33.8.3.3 VMX TSC Manipulation....33-83
33.8.3.4 Calculating Frequency with Intel PT....33-83

CHAPTER 34
INTRODUCTION TO INTEL® SOFTWARE GUARD EXTENSIONS

34.1 OVERVIEW....34-1
34.2 ENCLAVE INTERACTION AND PROTECTION....34-1
34.3 ENCLAVE LIFE CYCLE....34-2
34.4 DATA STRUCTURES AND ENCLAVE OPERATION....34-2
34.5 ENCLAVE PAGE CACHE....34-2
34.5.1 Enclave Page Cache Map (EPCM)....34-3
34.6 ENCLAVE INSTRUCTIONS AND INTEL® SGX....34-3
34.7 DISCOVERING SUPPORT FOR INTEL® SGX AND ENABLING ENCLAVE INSTRUCTIONS....34-4
34.7.1 Intel® SGX Opt-In Configuration....34-5
34.7.2 Intel® SGX Resource Enumeration Leaves....34-5
34.8 INTEL® SGX INTERACTIONS WITH CONTROL-FLOW ENFORCEMENT TECHNOLOGY....34-7
34.8.1 CET in Enclaves Model....34-7
34.8.2 Operations Not Supported on Shadow Stack Pages....34-8
34.8.3 Indirect Branch Tracking – Legacy Compatibility Treatment....34-8

CHAPTER 35
ENCLAVE ACCESS CONTROL AND DATA STRUCTURES

35.1 OVERVIEW OF ENCLAVE EXECUTION ENVIRONMENT . . . 35-1
35.2 TERMINOLOGY . . . 35-1
35.3 ACCESS-CONTROL REQUIREMENTS . . . 35-1
35.4 SEGMENT-BASED ACCESS CONTROL . . . 35-2
35.5 PAGE-BASED ACCESS CONTROL . . . 35-2
35.5.1 Access-control for Accesses that Originate from non-SGX Instructions . . . 35-2
35.5.2 Memory Accesses that Split across ELRANGE . . . 35-2
35.5.3 Implicit vs. Explicit Accesses . . . 35-3
35.5.3.1 Explicit Accesses . . . 35-3
35.5.3.2 Implicit Accesses . . . 35-3
35.6 INTEL® SGX DATA STRUCTURES OVERVIEW . . . 35-4
35.7 SGX ENCLAVE CONTROL STRUCTURE (SECS) . . . 35-5
35.7.1 ATTRIBUTES . . . 35-6
35.7.2 SECS.MISCSELECT Field . . . 35-6
35.7.3 SECS.CET_ATTRIBUTES Field . . . 35-6
35.8 THREAD CONTROL STRUCTURE (TCS) . . . 35-7
35.8.1 TCS.FLAGS . . . 35-8
35.8.2 State Save Area Offset (OSSA) . . . 35-8
35.8.3 Current State Save Area Frame (CSSA) . . . 35-8
35.8.4 Number of State Save Area Frames (NSSA) . . . 35-8
35.9 STATE SAVE AREA (SSA) FRAME . . . 35-8
35.9.1 GPRSGX Region . . . 35-9
35.9.1.1 EXITINFO . . . 35-9
35.9.1.2 VECTOR Field Definition . . . 35-10
35.9.2 MISC Region . . . 35-10
35.9.2.1 EXINFO Structure . . . 35-11
35.9.2.2 Page Fault Error Code . . . 35-11
35.10 CET STATE SAVE AREA FRAME . . . 35-12
35.11 PAGE INFORMATION (PAGEINFO) . . . 35-12
35.12 SECURITY INFORMATION (SECINFO) . . . 35-12
35.12.1 SECINFO.FLAGS . . . 35-12
35.12.2 PAGE_TYPE Field Definition . . . 35-13
35.13 PAGING CRYPTO METADATA (PCMD) . . . 35-13
35.14 ENCLAVE SIGNATURE STRUCTURE (SIGSTRUCT) . . . 35-14
35.15 EINIT TOKEN STRUCTURE (EINITTOKEN) . . . 35-15
35.16 REPORT (REPORT) . . . 35-16
35.16.1 REPORTDATA . . . 35-17
35.17 REPORT TARGET INFO (TARGETINFO) . . . 35-17
35.18 KEY REQUEST (KEYREQUEST) . . . 35-17
35.18.1 KEY REQUEST KeyNames . . . 35-18
35.18.2 Key Request Policy Structure . . . 35-18
35.19 VERSION ARRAY (VA) . . . 35-19
35.20 ENCLAVE PAGE CACHE MAP (EPCM) . . . 35-19
35.21 READ INFO (RDINFO) . . . 35-19
35.21.1 RDINFO Status Structure . . . 35-20
35.21.2 RDINFO Flags Structure . . . 35-20

CHAPTER 36
ENCLAVE OPERATION

36.1 CONSTRUCTING AN ENCLAVE . . . 36-1
36.1.1 ECREATE . . . 36-2
36.1.2 EADD and EEXTEND Interaction . . . 36-2
36.1.3 EINIT Interaction . . . 36-2
36.1.4 Intel® SGX Launch Control Configuration . . . 36-3
36.2 ENCLAVE ENTRY AND EXITING . . . 36-3
36.2.1 Controlled Entry and Exit . . . 36-3
36.2.2 Asynchronous Enclave Exit (AEX) . . . 36-4
36.2.3 Resuming Execution after AEX . . . 36-4
36.2.3.1 ERESUME Interaction . . . 36-5
36.3 CALLING ENCLAVE PROCEDURES . . . 36-5
36.3.1 Calling Convention . . . 36-5

PAGE

36.3.2 Register Preservation....36-5
36.3.3 Returning to Caller....36-5
36.4 INTEL® SGX KEY AND ATTESTATION....36-5
36.4.1 Enclave Measurement and Identification....36-5
36.4.1.1 MRENCLAVE....36-6
36.4.1.2 MRSIGNER....36-6
36.4.1.3 CONFIGID....36-7
36.4.2 Security Version Numbers (SVN)....36-7
36.4.2.1 Enclave Security Version....36-7
36.4.2.2 Hardware Security Version....36-7
36.4.2.3 CONFIGID Security Version....36-7
36.4.3 Keys....36-7
36.4.3.1 Sealing Enclave Data....36-8
36.4.3.2 Using REPORTs for Local Attestation....36-8
36.5 EPC AND MANAGEMENT OF EPC PAGES....36-9
36.5.1 EPC Implementation....36-9
36.5.2 OS Management of EPC Pages....36-9
36.5.2.1 Enhancement to Managing EPC Pages....36-10
36.5.3 Eviction of Enclave Pages....36-10
36.5.4 Loading an Enclave Page....36-10
36.5.5 Eviction of an SECS Page....36-11
36.5.6 Eviction of a Version Array Page....36-11
36.5.7 Allocating a Regular Page....36-11
36.5.8 Allocating a TCS Page....36-12
36.5.9 Trimming a Page....36-12
36.5.10 Restricting the EPCM Permissions of a Page....36-12
36.5.11 Extending the EPCM Permissions of a Page....36-13
36.5.12 VMM Oversubscription of EPC....36-13
36.6 CHANGES TO INSTRUCTION BEHAVIOR INSIDE AN ENCLAVE....36-14
36.6.1 Illegal Instructions....36-14
36.6.2 RDRAND and RDSEED Instructions....36-15
36.6.3 PAUSE Instruction....36-15
36.6.4 Executions of INT1 and INT3 Inside an Enclave....36-15
36.6.5 INVD Handling when Enclaves Are Enabled....36-15

CHAPTER 37
ENCLAVE EXITING EVENTS
37.1 COMPATIBLE SWITCH TO THE EXITING STACK OF AEX....37-1
37.2 STATE SAVING BY AEX....37-2
37.3 SYNTHETIC STATE ON ASYNCHRONOUS ENCLAVE EXIT....37-3
37.3.1 Processor Synthetic State on Asynchronous Enclave Exit....37-3
37.3.2 Synthetic State for Extended Features....37-3
37.3.3 Synthetic State for MISC Features....37-4
37.4 AEX FLOW....37-4
37.4.1 AEX Operational Detail....37-5

CHAPTER 38
INTEL® SGX INSTRUCTION REFERENCES
38.1 INTEL® SGX INSTRUCTION SYNTAX AND OPERATION....38-1
38.1.1 ENCLS Register Usage Summary....38-1
38.1.2 ENCLU Register Usage Summary....38-2
38.1.3 ENCLV Register Usage Summary....38-2
38.1.4 Information and Error Codes....38-2
38.1.5 Internal CREGs....38-3
38.1.6 Concurrent Operation Restrictions....38-4
38.1.6.1 Concurrency Tables of Intel® SGX Instructions....38-4
38.2 INTEL® SGX INSTRUCTION REFERENCE....38-8
ENCLS—Execute an Enclave System Function of Specified Leaf Number....38-9
ENCLU—Execute an Enclave User Function of Specified Leaf Number....38-11
ENCLV—Execute an Enclave VMM Function of Specified Leaf Number....38-14
38.3 INTEL® SGX SYSTEM LEAF FUNCTION REFERENCE....38-16
EADD—Add a Page to an Uninitialized Enclave....38-17

EAUG—Add a Page to an Initialized Enclave . . . 38-22
EBLOCK—Mark a page in EPC as Blocked . . . 38-27
ECREATE—Create an SECS page in the Enclave Page Cache . . . 38-30
EDBGRD—Read From a Debug Enclave . . . 38-36
EDBGWR—Write to a Debug Enclave . . . 38-40
EEXTEND—Extend Uninitialized Enclave Measurement by 256 Bytes . . . 38-44
EINIT—Initialize an Enclave for Execution . . . 38-47
ELDB/ELDU/ELDBC/ELDUC—Load an EPC Page and Mark its State . . . 38-55
EMODPR—Restrict the Permissions of an EPC Page . . . 38-61
EMODT—Change the Type of an EPC Page . . . 38-64
EPA—Add Version Array . . . 38-67
ERDINFO—Read Type and Status Information About an EPC Page . . . 38-69
EREMOVE—Remove a page from the EPC . . . 38-73
ETRACK—Activates EBLOCK Checks . . . 38-77
ETRACKC—Activates EBLOCK Checks . . . 38-80
EWB—Invalidate an EPC Page and Write out to Main Memory . . . 38-84
38.4 INTEL® SGX USER LEAF FUNCTION REFERENCE . . . 38-89
EACCEPT—Accept Changes to an EPC Page . . . 38-90
EACCEPTCOPY—Initialize a Pending Page . . . 38-95
EENTER—Enters an Enclave . . . 38-99
EEXIT—Exits an Enclave . . . 38-108
EGETKEY—Retrieves a Cryptographic Key . . . 38-111
EMODPE—Extend an EPC Page Permissions . . . 38-121
EREPORT—Create a Cryptographic Report of the Enclave . . . 38-124
ERESUME—Re-Enters an Enclave . . . 38-129
38.5 INTEL® SGX VIRTUALIZATION LEAF FUNCTION REFERENCE . . . 38-139
EDECVIRTCHILD—Decrement VIRTCHILDCNT in SECS . . . 38-140
EINCVIRTCHILD—Increment VIRTCHILDCNT in SECS . . . 38-144
ESETCONTEXT—Set the ENCLAVECONTEXT Field in SECS . . . 38-147

CHAPTER 39
INTEL® SGX INTERACTIONS WITH IA32 AND INTEL® 64 ARCHITECTURE

39.1 INTEL® SGX AVAILABILITY IN VARIOUS PROCESSOR MODES . . . 39-1
39.2 IA32_FEATURE_CONTROL . . . 39-1
39.2.1 Availability of Intel SGX . . . 39-1
39.2.2 Intel SGX Launch Control Configuration . . . 39-1
39.3 INTERACTIONS WITH SEGMENTATION . . . 39-1
39.3.1 Scope of Interaction . . . 39-1
39.3.2 Interactions of Intel® SGX Instructions with Segment, Operand, and Addressing Prefixes . . . 39-2
39.3.3 Interaction of Intel® SGX Instructions with Segmentation . . . 39-2
39.3.4 Interactions of Enclave Execution with Segmentation . . . 39-2
39.4 INTERACTIONS WITH PAGING . . . 39-2
39.5 INTERACTIONS WITH VMX . . . 39-3
39.5.1 VMM Controls to Configure Guest Support of Intel® SGX . . . 39-3
39.5.2 Interactions with the Extended Page Table Mechanism (EPT) . . . 39-3
39.5.3 Interactions with APIC Virtualization . . . 39-4
39.5.4 Interactions with VT and SGX concurrency . . . 39-4
39.5.5 Virtual Child Tracking . . . 39-5
39.5.6 Handling EPCM Entry Lock Conflicts . . . 39-5
39.5.7 Context Tracking . . . 39-6
39.6 INTEL® SGX INTERACTIONS WITH ARCHITECTURALLY-VISIBLE EVENTS . . . 39-6
39.7 INTERACTIONS WITH THE PROCESSOR EXTENDED STATE AND MISCELLANEOUS STATE . . . 39-6
39.7.1 Requirements and Architecture Overview . . . 39-6
39.7.2 Relevant Fields in Various Data Structures . . . 39-7
39.7.2.1 SECS.ATTRIBUTES.XFRM . . . 39-7
39.7.2.2 SECS.SSAFRAMESIZE . . . 39-8
39.7.2.3 XSAVE Area in SSA . . . 39-8
39.7.2.4 MISC Area in SSA . . . 39-8
39.7.2.5 SIGSTRUCT Fields . . . 39-8
39.7.2.6 REPORT.ATTRIBUTES.XFRM and REPORT.MISCSELECT . . . 39-9
39.7.2.7 KEYREQUEST . . . 39-9

PAGE

39.7.3 Processor Extended States and ENCLS[ECREATE] 39-9
39.7.4 Processor Extended States and ENCLU[EENTER] 39-9
39.7.4.1 Fault Checking 39-9
39.7.4.2 State Loading 39-9
39.7.5 Processor Extended States and AEX 39-10
39.7.5.1 State Saving 39-10
39.7.5.2 State Synthesis 39-10
39.7.6 Processor Extended States and ENCLU[ERESUME] 39-10
39.7.6.1 Fault Checking 39-10
39.7.6.2 State Loading 39-10
39.7.7 Processor Extended States and ENCLU[EEXIT] 39-10
39.7.8 Processor Extended States and ENCLU[EREPORT] 39-11
39.7.9 Processor Extended States and ENCLU[EGETKEY] 39-11
39.8 INTERACTIONS WITH SMM 39-11
39.8.1 Availability of Intel® SGX instructions in SMM 39-11
39.8.2 SMI while Inside an Enclave 39-11
39.8.3 SMRAM Synthetic State of AEX Triggered by SMI 39-11
39.9 INTERACTIONS OF INIT, SIPI, AND WAIT-FOR-SIPI WITH INTEL® SGX 39-12
39.10 INTERACTIONS WITH DMA 39-12
39.11 INTERACTIONS WITH TXT 39-12
39.11.1 Enclaves Created Prior to Execution of GETSEC 39-12
39.11.2 Interaction of GETSEC with Intel® SGX 39-12
39.11.3 Interactions with Authenticated Code Modules (ACMs) 39-13
39.12 INTERACTIONS WITH CACHING OF LINEAR-ADDRESS TRANSLATIONS 39-13
39.13 INTERACTIONS WITH INTEL® TRANSACTIONAL SYNCHRONIZATION EXTENSIONS (INTEL® TSX) 39-13
39.13.1 HLE and RTM Debug 39-14
39.14 INTEL® SGX INTERACTIONS WITH S STATES 39-14
39.15 INTEL® SGX INTERACTIONS WITH MACHINE CHECK ARCHITECTURE (MCA) 39-14
39.15.1 Interactions with MCA Events 39-14
39.15.2 Machine Check Enables (IA32_MCi_CTL) 39-14
39.15.3 CR4.MCE 39-14
39.16 INTEL® SGX INTERACTIONS WITH PROTECTED MODE VIRTUAL INTERRUPTS 39-15
39.17 INTEL SGX INTERACTION WITH PROTECTION KEYS 39-15

CHAPTER 40
ENCLAVE CODE DEBUG AND PROFILING

40.1 CONFIGURATION AND CONTROLS 40-1
40.1.1 Debug Enclave vs. Production Enclave 40-1
40.1.2 Tool-Chain Opt-in 40-1
40.2 SINGLE STEP DEBUG 40-1
40.2.1 Single Stepping ENCLS Instruction Leafs 40-1
40.2.2 Single Stepping ENCLU Instruction Leafs 40-1
40.2.3 Single-Stepping Enclave Entry with Opt-out Entry 40-2
40.2.3.1 Single Stepping without AEX 40-2
40.2.3.2 Single Step Preempted by AEX Due to Non-SMI Event 40-2
40.2.4 RFLAGS.TF Treatment on AEX 40-3
40.2.5 Restriction on Setting of TF after an Opt-Out Entry 40-3
40.2.6 Trampoline Code Considerations 40-3
40.3 CODE AND DATA BREAKPOINTS 40-3
40.3.1 Breakpoint Suppression 40-3
40.3.2 Reporting of Instruction Breakpoint on Next Instruction on a Debug Trap 40-4
40.3.3 RF Treatment on AEX 40-4
40.3.4 Breakpoint Matching in Intel® SGX Instruction Flows 40-4
40.4 CONSIDERATION OF THE INT1 AND INT3 INSTRUCTIONS 40-4
40.4.1 Behavior of INT1 and INT3 Inside an Enclave 40-4
40.4.2 Debugger Considerations 40-4
40.4.3 VMM Considerations 40-5
40.5 BRANCH TRACING 40-5
40.5.1 BTF Treatment 40-5
40.5.2 LBR Treatment 40-5
40.5.2.1 LBR Stack on Opt-in Entry 40-5
40.5.2.2 LBR Stack on Opt-out Entry 40-6
40.5.2.3 Mispredict Bit, Record Type, and Filtering 40-7
40.6 INTERACTION WITH PERFORMANCE MONITORING 40-7

40.6.1 IA32_PERF_GLOBAL_STATUS Enhancement . . . 40-7
40.6.2 Performance Monitoring with Opt-in Entry . . . 40-7
40.6.3 Performance Monitoring with Opt-out Entry . . . 40-8
40.6.4 Enclave Exit and Performance Monitoring . . . 40-8
40.6.5 PEBS Record Generation on Intel® SGX Instructions . . . 40-8
40.6.6 Exception-Handling on PEBS/BTS Loads/Stores after AEX . . . 40-8
40.6.6.1 Other Interactions with Performance Monitoring . . . 40-9

APPENDIX A
VMX CAPABILITY REPORTING FACILITY

A.1 BASIC VMX INFORMATION . . . A-1
A.2 RESERVED CONTROLS AND DEFAULT SETTINGS . . . A-2
A.3 VM-EXECUTION CONTROLS . . . A-2
A.3.1 Pin-Based VM-Execution Controls . . . A-2
A.3.2 Primary Processor-Based VM-Execution Controls . . . A-3
A.3.3 Secondary Processor-Based VM-Execution Controls . . . A-4
A.3.4 Tertiary Processor-Based VM-Execution Controls . . . A-4
A.4 VM-EXIT CONTROLS . . . A-4
A.4.1 Primary VM-Exit Controls . . . A-4
A.4.2 Secondary VM-Exit Controls . . . A-5
A.5 VM-ENTRY CONTROLS . . . A-5
A.6 MISCELLANEOUS DATA . . . A-6
A.7 VMX-FIXED BITS IN CR0 . . . A-7
A.8 VMX-FIXED BITS IN CR4 . . . A-7
A.9 VMCS ENUMERATION . . . A-7
A.10 VPID AND EPT CAPABILITIES . . . A-8
A.11 VM FUNCTIONS . . . A-9

APPENDIX B
FIELD ENCODING IN VMCS

B.1 16-BIT FIELDS . . . B-1
B.1.1 16-Bit Control Fields . . . B-1
B.1.2 16-Bit Guest-State Fields . . . B-1
B.1.3 16-Bit Host-State Fields . . . B-2
B.2 64-BIT FIELDS . . . B-2
B.2.1 64-Bit Control Fields . . . B-2
B.2.2 64-Bit Read-Only Data Field . . . B-5
B.2.3 64-Bit Guest-State Fields . . . B-5
B.2.4 64-Bit Host-State Fields . . . B-6
B.3 32-BIT FIELDS . . . B-7
B.3.1 32-Bit Control Fields . . . B-7
B.3.2 32-Bit Read-Only Data Fields . . . B-8
B.3.3 32-Bit Guest-State Fields . . . B-8
B.3.4 32-Bit Host-State Field . . . B-9
B.4 NATURAL-WIDTH FIELDS . . . B-9
B.4.1 Natural-Width Control Fields . . . B-9
B.4.2 Natural-Width Read-Only Data Fields . . . B-10
B.4.3 Natural-Width Guest-State Fields . . . B-10
B.4.4 Natural-Width Host-State Fields . . . B-12

APPENDIX C
VMX BASIC EXIT REASONS

PAGE

FIGURES

Figure 1-1. Bit and Byte Order 1-7
Figure 1-2. Syntax for CPUID, CR, and MSR Data Presentation 1-9
Figure 2-1. IA-32 System-Level Registers and Data Structures 2-2
Figure 2-2. System-Level Registers and Data Structures in IA-32e Mode and 4-Level Paging 2-3
Figure 2-3. Transitions Among the Processor's Operating Modes 2-8
Figure 2-4. IA32_EFER MSR Layout 2-9
Figure 2-5. System Flags in the EFLAGS Register 2-10
Figure 2-6. Memory Management Registers 2-12
Figure 2-7. Control Registers 2-14
Figure 2-8. XCR0 2-21
Figure 2-9. Format of Protection-Key Rights Registers 2-22
Figure 2-10. WBINVD Invalidation of Shared and Non-Shared Cache Hierarchy 2-26
Figure 3-1. Segmentation and Paging 3-2
Figure 3-2. Flat Model 3-3
Figure 3-3. Protected Flat Model 3-4
Figure 3-4. Multi-Segment Model 3-5
Figure 3-5. Logical Address to Linear Address Translation 3-7
Figure 3-6. Segment Selector 3-7
Figure 3-7. Segment Registers 3-8
Figure 3-8. Segment Descriptor 3-10
Figure 3-9. Segment Descriptor When Segment-Present Flag Is Clear 3-11
Figure 3-10. Global and Local Descriptor Tables 3-15
Figure 3-11. Pseudo-Descriptor Formats 3-16
Figure 4-1. Enabling and Changing Paging Modes 4-4
Figure 4-2. Linear-Address Translation to a 4-KByte Page using 32-Bit Paging 4-10
Figure 4-4. Formats of CR3 and Paging-Structure Entries with 32-Bit Paging 4-11
Figure 4-3. Linear-Address Translation to a 4-MByte Page using 32-Bit Paging 4-11
Figure 4-5. Linear-Address Translation to a 4-KByte Page using PAE Paging 4-16
Figure 4-6. Linear-Address Translation to a 2-MByte Page using PAE Paging 4-17
Figure 4-7. Formats of CR3 and Paging-Structure Entries with PAE Paging 4-19
Figure 4-8. Linear-Address Translation to a 4-KByte Page using 4-Level Paging 4-22
Figure 4-9. Linear-Address Translation to a 2-MByte Page using 4-Level Paging 4-23
Figure 4-10. Linear-Address Translation to a 1-GByte Page using 4-Level Paging 4-23
Figure 4-11. Formats of CR3 and Paging-Structure Entries with 4-Level Paging and 5-Level Paging 4-32
Figure 4-12. Page-Fault Error Code 4-37
Figure 4-13. Memory Management Convention That Assigns a Page Table to Each Segment 4-55
Figure 5-1. Descriptor Fields Used for Protection 5-3
Figure 5-2. Descriptor Fields with Flags used in IA-32e Mode 5-4
Figure 5-3. Protection Rings 5-7
Figure 5-4. Privilege Check for Data Access 5-8
Figure 5-5. Examples of Accessing Data Segments From Various Privilege Levels 5-9
Figure 5-6. Privilege Check for Control Transfer Without Using a Gate 5-11
Figure 5-7. Examples of Accessing Conforming and Nonconforming Code Segments From Various Privilege Levels 5-12
Figure 5-8. Call-Gate Descriptor 5-13
Figure 5-9. Call-Gate Descriptor in IA-32e Mode 5-14
Figure 5-10. Call-Gate Mechanism 5-15
Figure 5-11. Privilege Check for Control Transfer with Call Gate 5-16
Figure 5-12. Example of Accessing Call Gates At Various Privilege Levels 5-17
Figure 5-13. Stack Switching During an Interprivilege-Level Call 5-19
Figure 5-14. MSRs Used by SYSCALL and SYSRET 5-23
Figure 5-15. Use of RPL to Weaken Privilege Level of Called Procedure 5-26
Figure 6-1. Relationship of the IDTR and IDT 6-10
Figure 6-2. IDT Gate Descriptors 6-11
Figure 6-3. Interrupt Procedure Call 6-12
Figure 6-4. Stack Usage on Transfers to Interrupt and Exception-Handling Routines 6-13
Figure 6-5. Shadow Stack Usage on Transfers to Interrupt and Exception-Handling Routines 6-15
Figure 6-6. Interrupt Task Switch 6-18
Figure 6-7. Error Code 6-19
Figure 6-8. 64-Bit IDT Gate Descriptors 6-20
Figure 6-9. IA-32e Mode Stack Usage After Privilege Level Change 6-22
Figure 6-10. Interrupt Shadow Stack Table 6-23
Figure 6-11. Page-Fault Error Code 6-46

PAGE

Figure 6-12. Exception Error Code Information 6-56
Figure 8-1. Structure of a Task 8-2
Figure 8-2. 32-Bit Task-State Segment (TSS) 8-4
Figure 8-3. TSS Descriptor 8-6
Figure 8-4. Format of TSS and LDT Descriptors in 64-bit Mode 8-7
Figure 8-5. Task Register 8-8
Figure 8-6. Task-Gate Descriptor 8-8
Figure 8-7. Task Gates Referencing the Same Task 8-9
Figure 8-8. Nested Tasks 8-15
Figure 8-9. Overlapping Linear-to-Physical Mappings 8-17
Figure 8-10. 16-Bit TSS Format 8-19
Figure 8-11. 64-Bit TSS Format 8-20
Figure 9-1. Example of Write Ordering in Multiple-Processor Systems 9-7
Figure 9-2. Interpretation of APIC ID in Early MP Systems 9-24
Figure 9-3. Local APICs and I/O APIC in MP System Supporting Intel HT Technology 9-27
Figure 9-4. IA-32 Processor with Two Logical Processors Supporting Intel HT Technology 9-28
Figure 9-5. Generalized Seven Level Interpretation of the APIC ID 9-35
Figure 9-6. Conceptual Six-Level Topology and 32-bit APIC ID Composition 9-36
Figure 9-7. Topological Relationships between Hierarchical IDs in a Hypothetical MP Platform 9-39
Figure 9-1. MP System With Multiple Pentium III Processors 9-57
Figure 10-1. Contents of CR0 Register after Reset 10-2
Figure 10-2. Version Information in the EDX Register after Reset 10-5
Figure 10-3. Processor State After Reset 10-15
Figure 10-4. Constructing Temporary GDT and Switching to Protected Mode (Lines 162-172 of List File) 10-23
Figure 10-5. Moving the GDT, IDT, and TSS from ROM to RAM (Lines 196-261 of List File) 10-24
Figure 10-6. Task Switching (Lines 282-296 of List File) 10-25
Figure 10-7. Applying Microcode Updates 10-28
Figure 10-8. Microcode Update Write Operation Flow [1] 10-45
Figure 10-9. Microcode Update Write Operation Flow [2] 10-46
Figure 11-1. Relationship of Local APIC and I/O APIC In Single-Processor Systems 11-2
Figure 11-2. Local APICs and I/O APIC When Intel Xeon Processors Are Used in Multiple-Processor Systems 11-3
Figure 11-3. Local APICs and I/O APIC When P6 Family Processors Are Used in Multiple-Processor Systems 11-3
Figure 11-4. Local APIC Structure 11-5
Figure 11-5. IA32_APIC_BASE MSR (APIC_BASE_MSR in P6 Family) 11-9
Figure 11-6. Local APIC ID Register 11-9
Figure 11-7. Local APIC Version Register 11-11
Figure 11-8. Local Vector Table (LVT) 11-13
Figure 11-9. Error Status Register (ESR) 11-15
Figure 11-10. Divide Configuration Register 11-17
Figure 11-11. Initial Count and Current Count Registers 11-17
Figure 11-12. Interrupt Command Register (ICR) 11-19
Figure 11-13. Logical Destination Register (LDR) 11-24
Figure 11-14. Destination Format Register (DFR) 11-24
Figure 11-15. Arbitration Priority Register (APR) 11-25
Figure 11-16. Interrupt Acceptance Flow Chart for the Local APIC (Pentium 4 and Intel Xeon Processors) 11-27
Figure 11-17. Interrupt Acceptance Flow Chart for the Local APIC (P6 Family and Pentium Processors) 11-28
Figure 11-18. Task-Priority Register (TPR) 11-29
Figure 11-19. Processor-Priority Register (PPR) 11-29
Figure 11-20. IRR, ISR, and TMR Registers 11-30
Figure 11-21. EOI Register 11-31
Figure 11-22. CR8 Register 11-32
Figure 11-23. Spurious-Interrupt Vector Register (SVR) 11-33
Figure 11-24. Layout of the MSI Message Address Register 11-34
Figure 11-25. Layout of the MSI Message Data Register 11-36
Figure 11-26. IA32_APIC_BASE MSR Supporting x2APIC 11-37
Figure 11-27. Local x2APIC State Transitions with IA32_APIC_BASE, INIT, and Reset 11-42
Figure 11-28. Interrupt Command Register (ICR) in x2APIC Mode 11-45
Figure 11-29. Logical Destination Register in x2APIC Mode 11-46
Figure 11-30. SELF IPI register 11-47
Figure 12-1. Cache Structure of the Pentium 4 and Intel Xeon Processors 12-1
Figure 12-2. Cache Structure of the Intel Core i7 Processors 12-2
Figure 12-3. Cache-Control Registers and Bits Available in Intel 64 and IA-32 Processors 12-11
Figure 12-4. Mapping Physical Memory With MTRRs 12-21
Figure 12-5. IA32_MTRRCAP Register 12-22
Figure 12-6. IA32_MTRR_DEF_TYPE MSR 12-23

PAGE

Figure 12-7. IA32_MTRR_PHYSBASEn and IA32_MTRR_PHYSMASKn Variable-Range Register Pair 12-25
Figure 12-8. IA32_SMRR_PHYSBASE and IA32_SMRR_PHYSMASK SMRR Pair 12-26
Figure 12-9. IA32_PAT MSR 12-34
Figure 13-1. Mapping of MMX Registers to Floating-Point Registers 13-2
Figure 13-2. Mapping of MMX Registers to x87 FPU Data Register Stack 13-5
Figure 15-1. IA32_MPERF MSR and IA32_APERF MSR for P-state Coordination 15-2
Figure 15-2. IA32_PERF_CTL Register 15-4
Figure 15-3. IA32_ENERGY_PERF_BIAS Register 15-5
Figure 15-4. IA32_PM_ENABLE MSR 15-7
Figure 15-5. IA32_HWP_CAPABILITIES Register 15-8
Figure 15-6. IA32_HWP_REQUEST Register 15-9
Figure 15-7. IA32_HWP_REQUEST_PKG Register 15-11
Figure 15-8. IA32_HWP_PECI_REQUEST_INFO MSR 15-11
Figure 15-9. IA32_HWP_STATUS MSR 15-14
Figure 15-10. IA32_THERM_STATUS Register With HWP Feedback 15-15
Figure 15-11. MSR_PPERF MSR 15-15
Figure 15-12. IA32_HWP_INTERRUPT MSR 15-16
Figure 15-13. FAST_UNCORE_MSRS_CAPABILITY MSR 15-17
Figure 15-14. FAST_UNCORE_MSRS_CTL MSR 15-18
Figure 15-15. FAST_UNCORE_MSRS_STATUS MSR 15-18
Figure 15-16. IA32_PKG_HDC_CTL MSR 15-21
Figure 15-17. IA32_PM_CTL1 MSR 15-22
Figure 15-18. IA32_THREAD_STALL MSR 15-22
Figure 15-19. MSR_CORE_HDC_RESIDENCY MSR 15-23
Figure 15-20. MSR_PKG_HDC_SHALLOW_RESIDENCY MSR 15-23
Figure 15-21. MSR_PKG_HDC_DEEP_RESIDENCY MSR 15-24
Figure 15-22. MSR_PKG_HDC_CONFIG MSR 15-24
Figure 15-23. Example of Effective Frequency Reduction and Forced Idle Period of HDC 15-25
Figure 15-24. Processor Modulation Through Stop-Clock Mechanism 15-36
Figure 15-25. MSR_THERM2_CTL Register On Processors with CPUID Family/Model/Stepping Signature Encoded as 0x69n or 0x6Dn 15-38
Figure 15-26. MSR_THERM2_CTL Register for Supporting TM2 15-38
Figure 15-27. IA32_THERM_STATUS MSR 15-39
Figure 15-28. IA32_THERM_INTERRUPT MSR 15-39
Figure 15-29. IA32_CLOCK_MODULATION MSR 15-40
Figure 15-30. IA32_CLOCK_MODULATION MSR with Clock Modulation Extension 15-41
Figure 15-31. IA32_THERM_STATUS Register 15-42
Figure 15-32. IA32_THERM_INTERRUPT Register 15-44
Figure 15-33. IA32_PACKAGE_THERM_STATUS Register 15-45
Figure 15-34. IA32_PACKAGE_THERM_INTERRUPT Register 15-47
Figure 15-35. MSR_RAPL_POWER_UNIT Register 15-49
Figure 15-36. MSR_PKG_POWER_LIMIT Register 15-50
Figure 15-37. MSR_PKG_ENERGY_STATUS MSR 15-51
Figure 15-38. MSR_PKG_POWER_INFO Register 15-51
Figure 15-39. MSR_PKG_PERF_STATUS MSR 15-52
Figure 15-40. MSR_PP0_POWER_LIMIT/MSR_PP1_POWER_LIMIT Register 15-52
Figure 15-41. MSR_PP0_ENERGY_STATUS/MSR_PP1_ENERGY_STATUS MSR 15-53
Figure 15-42. MSR_PP0_POLICY/MSR_PP1_POLICY Register 15-53
Figure 15-43. MSR_PP0_PERF_STATUS MSR 15-54
Figure 15-44. MSR_DRAM_POWER_LIMIT Register 15-54
Figure 15-45. MSR_DRAM_ENERGY_STATUS MSR 15-55
Figure 15-46. MSR_DRAM_POWER_INFO Register 15-55
Figure 15-47. MSR_DRAM_PERF_STATUS MSR 15-55
Figure 16-1. Machine-Check MSRs 16-2
Figure 16-2. IA32_MCG_CAP Register 16-3
Figure 16-3. IA32_MCG_STATUS Register 16-4
Figure 16-4. IA32_MCG_EXT_CTL Register 16-5
Figure 16-5. IA32_MCi_CTL Register 16-6
Figure 16-6. IA32_MCi_STATUS Register 16-7
Figure 16-7. IA32_MCi_ADDR MSR 16-9
Figure 16-8. UCR Support in IA32_MCi_MISC Register 16-10
Figure 16-9. IA32_MCi_CTL2 Register 16-11
Figure 16-10. CMCI Behavior 16-14
Figure 18-1. Debug Registers 18-3
Figure 18-2. DR6/DR7 Layout on Processors Supporting Intel® 64 Architecture 18-7

PAGE

Figure 18-3. IA32_DEBUGCTL MSR for Processors based on Intel Core microarchitecture 18-13
Figure 18-4. 64-bit Address Layout of LBR MSR 18-17
Figure 18-5. DS Save Area Example 18-20
Figure 18-6. 32-bit Branch Trace Record Format 18-21
Figure 18-7. PEBS Record Format 18-21
Figure 18-8. IA-32e Mode DS Save Area Example 18-22
Figure 18-9. 64-bit Branch Trace Record Format 18-22
Figure 18-10. 64-bit PEBS Record Format 18-23
Figure 18-11. IA32_DEBUGCTL MSR for Processors Based on Nehalem Microarchitecture 18-29
Figure 18-12. MSR_DEBUGCTLA MSR for Pentium 4 and Intel Xeon Processors 18-35
Figure 18-13. LBR MSR Branch Record Layout for the Pentium 4 and Intel® Xeon® Processor Family 18-36
Figure 18-14. IA32_DEBUGCTL MSR for Intel® Core™ Solo and Intel® Core™ Duo Processors 18-37
Figure 18-15. LBR Branch Record Layout for the Intel® Core™ Solo and Intel® Core™ Duo Processor 18-38
Figure 18-16. MSR_DEBUGCTLB MSR for Pentium M Processors 18-39
Figure 18-17. LBR Branch Record Layout for the Pentium M Processor 18-39
Figure 18-18. DEBUGCTLMSR Register (P6 Family Processors) 18-40
Figure 18-19. Platform Shared Resource Monitoring Usage Flow 18-45
Figure 18-20. CPUID.(EAX=0FH, ECX=0H) Monitoring Resource Type Enumeration 18-46
Figure 18-21. L3 Cache Monitoring Capability Enumeration Data (CPUID.(EAX=0FH, ECX=1H)) 18-46
Figure 18-22. L3 Cache Monitoring Capability Enumeration Event Type Bit Vector (CPUID.(EAX=0FH, ECX=1H)) 18-47
Figure 18-23. IA32_PQR_ASSOC MSR 18-48
Figure 18-24. IA32_QM_EVTSEL and IA32_QM_CTR MSRs 18-49
Figure 18-25. Software Usage of Cache Monitoring Resources 18-49
Figure 18-26. Cache Allocation Technology Enables Allocation of More Resources to High Priority Applications 18-51
Figure 18-27. Examples of Cache Capacity Bitmasks 18-52
Figure 18-28. Class of Service and Cache Capacity Bitmasks 18-53
Figure 18-29. Code and Data Capacity Bitmasks of CDP 18-55
Figure 18-30. Cache Allocation Technology Usage Flow 18-56
Figure 18-31. CPUID.(EAX=10H, ECX=0H) Available Resource Type Identification 18-57
Figure 18-32. L3 Cache Allocation Technology and CDP Enumeration 18-57
Figure 18-33. L2 Cache Allocation Technology 18-58
Figure 18-34. IA32_PQR_ASSOC, IA32_L3_MASK_n MSRs 18-59
Figure 18-35. IA32_L2_MASK_n MSRs 18-59
Figure 18-36. Layout of IA32_L3_QOS_CFG 18-60
Figure 18-37. Layout of IA32_L2_QOS_CFG 18-61
Figure 18-38. A High-Level Overview of the MBA Feature 18-64
Figure 18-39. CPUID.(EAX=10H, ECX=3H) MBA Feature Details Identification 18-66
Figure 18-40. IA32_L2_QoS_Ext_BW_Thrtl_n MSR Definition 18-67
Figure 20-1. Layout of IA32_PERFEVTSELx MSRs 20-4
Figure 20-2. Layout of IA32_FIXED_CTR_CTRL MSR 20-8
Figure 20-3. Layout of IA32_PERF_GLOBAL_CTRL MSR 20-8
Figure 20-4. Layout of IA32_PERF_GLOBAL_STATUS MSR 20-10
Figure 20-5. Layout of IA32_PERF_GLOBAL_OVF_CTRL MSR 20-10
Figure 20-6. Layout of IA32_PERFEVTSELx MSRs Supporting Architectural Performance Monitoring Version 3 20-11
Figure 20-7. IA32_FIXED_CTR_CTRL MSR Supporting Architectural Performance Monitoring Version 3 20-11
Figure 20-8. Layout of Global Performance Monitoring Control MSR 20-12
Figure 20-9. Global Performance Monitoring Overflow Status and Control MSRs 20-12
Figure 20-10. IA32_PERF_GLOBAL_STATUS MSR and Architectural Perfmon Version 4 20-14
Figure 20-11. IA32_PERF_GLOBAL_STATUS_RESET MSR and Architectural Perfmon Version 4 20-15
Figure 20-12. IA32_PERF_GLOBAL_STATUS_SET MSR and Architectural Perfmon Version 4 20-15
Figure 20-13. IA32_PERF_GLOBAL_INUSE MSR and Architectural Perfmon Version 4 20-16
Figure 20-14. IA32_PERF_GLOBAL_STATUS MSR 20-18
Figure 20-15. Layout of IA32_PEBS_ENABLE MSR 20-19
Figure 20-16. PEBS Programming Environment 20-21
Figure 20-17. Layout of MSR_PEBS_LD_LAT MSR 20-24
Figure 20-18. Layout of MSR_OFFCORE_RSP_0 and MSR_OFFCORE_RSP_1 to Configure Off-core Response Events 20-25
Figure 20-19. Layout of MSR_UNCORE_PERF_GLOBAL_CTRL MSR 20-27
Figure 20-20. Layout of MSR_UNCORE_PERF_GLOBAL_STATUS MSR 20-28
Figure 20-21. Layout of MSR_UNCORE_PERF_GLOBAL_OVF_CTRL MSR 20-28
Figure 20-22. Layout of MSR_UNCORE_PERFEVTSELx MSRs 20-29
Figure 20-23. Layout of MSR_UNCORE_FIXED_CTR_CTRL MSR 20-29
Figure 20-24. Layout of MSR_UNCORE_ADDR_OPCODE_MATCH MSR 20-30
Figure 20-25. Distributed Units of the Uncore of Intel® Xeon® Processor 7500 Series 20-31
Figure 20-26. IA32_PERF_GLOBAL_CTRL MSR in Sandy Bridge Microarchitecture 20-34
Figure 20-27. IA32_PERF_GLOBAL_STATUS MSR in Sandy Bridge Microarchitecture 20-35

PAGE

Figure 20-28. IA32_PERF_GLOBAL_OVF_CTRL MSR in Sandy Bridge Microarchitecture 20-36
Figure 20-29. Layout of IA32_PEBS_ENABLE MSR 20-38
Figure 20-30. Request_Type Fields for MSR_OFFCORE_RSP_x 20-42
Figure 20-31. Response_Supplier and Snoop Info Fields for MSR_OFFCORE_RSP_x 20-43
Figure 20-32. Layout of Uncore PERFEVTSEL MSR for a C-Box Unit or the ARB Unit 20-44
Figure 20-33. Layout of MSR_UNC_PERF_GLOBAL_CTRL MSR for Uncore 20-45
Figure 20-34. Layout of IA32_PERFEVTSELx MSRs Supporting Intel TSX 20-54
Figure 20-35. IA32_PERF_GLOBAL_STATUS MSR in Broadwell Microarchitecture 20-56
Figure 20-36. IA32_PERF_GLOBAL_OVF_CTRL MSR in Broadwell microarchitecture 20-56
Figure 20-37. MSR_PERF_METRICS Definition 20-69
Figure 20-38. PERF_METRICS MSR Definition for 12th Generation Intel® Core™ Processor P-core 20-71
Figure 20-39. Deducing Implied Level 2 Metrics in the Core PMU for12th Generation Intel® Core™ Processor P-core 20-72
Figure 20-40. Request_Type Fields for MSR_OFFCORE_RSPx 20-83
Figure 20-41. Response_Supplier and Snoop Info Fields for MSR_OFFCORE_RSPx 20-84
Figure 20-42. IA32_PEBS_ENABLE MSR with PEBS Output to Intel® Processor Trace 20-93
Figure 20-43. Layout of IA32_FIXED_CTR_CTRL MSR 20-99
Figure 20-44. Layout of MSR_PERF_GLOBAL_CTRL MSR 20-100
Figure 20-45. Layout of MSR_PERF_GLOBAL_STATUS MSR 20-100
Figure 20-46. Layout of MSR_PERF_GLOBAL_OVF_CTRL MSR 20-101
Figure 20-47. Event Selection Control Register (ESCR) for Pentium 4 and Intel® Xeon® Processors without Intel HT Technology Support 20-107
Figure 20-48. Performance Counter (Pentium 4 and Intel® Xeon® Processors) 20-109
Figure 20-49. Counter Configuration Control Register (CCCR) 20-110
Figure 20-50. Effects of Edge Filtering 20-113
Figure 20-51. Event Selection Control Register (ESCR) for the Pentium 4 Processor, Intel® Xeon® Processor and Intel® Xeon® Processor MP Supporting Hyper-Threading Technology 20-121
Figure 20-52. Counter Configuration Control Register (CCCR) 20-122
Figure 20-53. Block Diagram of 64-bit Intel® Xeon® Processor MP with 8-MByte L3 20-125
Figure 20-54. MSR_IFSB_IBUSQx, Addresses: 107CCH and 107CDH 20-126
Figure 20-55. MSR_IFSB_ISNPQx, Addresses: 107CEH and 107CFH 20-126
Figure 20-56. MSR_EFSB_DRDYx, Addresses: 107D0H and 107D1H 20-127
Figure 20-57. MSR_IFSB_CTL6, Address: 107D2H; MSR_IFSB_CNTR7, Address: 107D3H 20-127
Figure 20-58. Block Diagram of the Intel® Xeon® Processor 7400 Series 20-128
Figure 20-59. Block Diagram of the Intel® Xeon® Processor 7100 Series 20-129
Figure 20-60. MSR_EMON_L3_CTR_CTL0/1, Addresses: 107CCH/107CDH 20-130
Figure 20-61. MSR_EMON_L3_CTR_CTL2/3, Addresses: 107CEH/107CFH 20-132
Figure 20-62. MSR_EMON_L3_CTR_CTL4/5/6/7, Addresses: 107D0H-107D3H 20-132
Figure 20-63. PerfEvtSel0 and PerfEvtSel1 MSRs 20-134
Figure 20-64. CESR MSR (Pentium Processor Only) 20-137
Figure 20-65. Layout of IA32_PERF_CAPABILITIES MSR 20-142
Figure 20-66. Layout of IA32_PEBS_ENABLE MSR 20-143
Figure 20-67. PEBS Programming Environment 20-144
Figure 20-68. Layout of IA32_PerfEvtSelX MSR Supporting Adaptive PEBS 20-145
Figure 20-69. Layout of IA32_FIXED_CTR_CTRL MSR Supporting Adaptive PEBS 20-146
Figure 20-70. MSR_PEBS_DATA_CFG 20-150
Figure 21-1. Real-Address Mode Address Translation 21-3
Figure 21-2. Interrupt Vector Table in Real-Address Mode 21-5
Figure 21-3. Entering and Leaving Virtual-8086 Mode 21-9
Figure 21-4. Privilege Level 0 Stack After Interrupt or Exception in Virtual-8086 Mode 21-13
Figure 21-5. Software Interrupt Redirection Bit Map in TSS 21-18
Figure 22-1. Stack after Far 16- and 32-Bit Calls 22-5
Figure 23-1. I/O Map Base Address Differences 23-30
Figure 24-1. Interaction of a Virtual-Machine Monitor and Guests 24-2
Figure 25-1. States of VMCS X 25-2
Figure 29-1. Formats of EPTP and EPT Paging-Structure Entries 29-12
Figure 31-1. INVEPT Descriptor 31-3
Figure 31-2. INVVPID Descriptor 31-6
Figure 32-1. SMRAM Usage 32-4
Figure 32-2. SMM Revision Identifier 32-13
Figure 32-3. Auto HALT Restart Field 32-14
Figure 32-4. SMBASE Relocation Field 32-15
Figure 32-5. I/O Instruction Restart Field 32-15
Figure 33-1. ToPA Memory Illustration 33-11
Figure 33-2. Layout of ToPA Table Entry 33-12
Figure 33-3. Interpreting Tabular Definition of Packet Format 33-38

PAGE

Figure 34-1. An Enclave Within the Application's Virtual Address Space 34-1
Figure 36-1. Enclave Memory Layout 36-1
Figure 36-2. Measurement Flow of Enclave Build Process 36-6
Figure 36-3. SGX Local Attestation 36-9
Figure 37-1. Exit Stack Just After Interrupt with Stack Switch 37-1
Figure 37-2. The SSA Stack 37-2
Figure 38-1. Relationships Between SECS, SIGSTRUCT, and EINITTOKEN 38-47
Figure 40-1. Single Stepping with Opt-out Entry - No AEX 40-2
Figure 40-2. Single Stepping with Opt-out Entry -AEX Due to Non-SMI Event Before Single-Step Boundary 40-3
Figure 40-3. LBR Stack Interaction with Opt-in Entry 40-6
Figure 40-4. LBR Stack Interaction with Opt-out Entry 40-7

PAGE

TABLES

Table 2-1. IA32_EFER MSR Information 2-9
Table 2-2. Action Taken By x87 FPU Instructions for Different Combinations of EM, MP, and TS 2-16
Table 2-3. Summary of System Instructions 2-23
Table 3-1. Code- and Data-Segment Types 3-12
Table 3-2. System-Segment and Gate-Descriptor Types 3-14
Table 4-1. Properties of Different Paging Modes 4-2
Table 4-2. Paging Structures in the Different Paging Modes 4-8
Table 4-3. Use of CR3 with 32-Bit Paging 4-12
Table 4-4. Format of a 32-Bit Page-Directory Entry that Maps a 4-MByte Page 4-12
Table 4-6. Format of a 32-Bit Page-Table Entry that Maps a 4-KByte Page 4-13
Table 4-5. Format of a 32-Bit Page-Directory Entry that References a Page Table 4-13
Table 4-7. Use of CR3 with PAE Paging 4-14
Table 4-8. Format of a PAE Page-Directory-Pointer-Table Entry (PDPTE) 4-15
Table 4-9. Format of a PAE Page-Directory Entry that Maps a 2-MByte Page 4-17
Table 4-10. Format of a PAE Page-Directory Entry that References a Page Table 4-18
Table 4-11. Format of a PAE Page-Table Entry that Maps a 4-KByte Page 4-18
Table 4-12. Use of CR3 with 4-Level Paging and 5-level Paging and CR4.PCIDE = 0 4-20
Table 4-13. Use of CR3 with 4-Level Paging and 5-Level Paging and CR4.PCIDE = 1 4-21
Table 4-14. Format of a PML5 Entry (PML5E) that References a PML4 Table 4-26
Table 4-15. Format of a PML4 Entry (PML4E) that References a Page-Directory-Pointer Table 4-26
Table 4-16. Format of a Page-Directory-Pointer-Table Entry (PDPTE) that Maps a 1-GByte Page 4-27
Table 4-17. Format of a Page-Directory-Pointer-Table Entry (PDPTE) that References a Page Directory 4-28
Table 4-18. Format of a Page-Directory Entry that Maps a 2-MByte Page 4-29
Table 4-19. Format of a Page-Directory Entry that References a Page Table 4-30
Table 4-20. Format of a Page-Table Entry that Maps a 4-KByte Page 4-31
Table 5-1. Privilege Check Rules for Call Gates 5-16
Table 5-2. 64-Bit-Mode Stack Layout After Far CALL with CPL Change 5-19
Table 5-3. Combined Page-Directory and Page-Table Protection 5-29
Table 5-4. Extended Feature Enable MSR (IA32_EFER) 5-30
Table 5-6. 4-KByte Page Level Protection Matrix with Execute-Disable Bit Capability with PAE Paging 5-31
Table 5-7. 2-MByte Page Level Protection with Execute-Disable Bit Capability with PAE Paging 5-31
Table 5-5. Page Level Protection Matrix with Execute-Disable Bit Capability with 4-Level Paging 5-31
Table 5-9. Reserved Bit Checking WIth Execute-Disable Bit Capability Not Enabled 5-32
Table 5-8. Page Level Protection Matrix with Execute-Disable Bit Capability Enabled 5-32
Table 6-1. Protected-Mode Exceptions and Interrupts 6-2
Table 6-2. Priority Among Concurrent Events 6-8
Table 6-3. Debug Exception Conditions and Corresponding Exception Classes 6-25
Table 6-4. Interrupt and Exception Classes 6-33
Table 6-5. Conditions for Generating a Double Fault 6-34
Table 6-6. Invalid TSS Conditions 6-36
Table 6-7. Alignment Requirements by Data Type 6-50
Table 6-8. SIMD Floating-Point Exceptions Priority 6-54
Table 7-1. Format of User Posted-Interrupt Descriptor — UPID 7-5
Table 8-1. Exception Conditions Checked During a Task Switch 8-13
Table 8-2. Effect of a Task Switch on Busy Flag, NT Flag, Previous Task Link Field, and TS Flag 8-15
Table 9-1. Broadcast INIT-SIPI-SIPI Sequence and Choice of Timeouts 9-22
Table 9-2. Initial APIC IDs for the Logical Processors in a System that has Four Intel Xeon MP Processors Supporting Intel Hyper-Threading Technology[1] 9-39
Table 9-3. Initial APIC IDs for the Logical Processors in a System that has Two Physical Processors Supporting Dual-Core and Intel Hyper-Threading Technology 9-39
Table 9-4. Example of Possible x2APIC ID Assignment in a System that has Two Physical Processors Supporting x2APIC and Intel Hyper-Threading Technology 9-40
Table 9-5. Boot Phase IPI Message Format 9-56
Table 10-1. IA-32 and Intel 64 Processor States Following Power-up, Reset, or INIT 10-2
Table 10-2. Variance of RESET Values in Selected Intel Architecture Processors 10-4
Table 10-3. Recommended Settings of EM and MP Flags on IA-32 Processors 10-6
Table 10-4. Software Emulation Settings of EM, MP, and NE Flags 10-7
Table 10-5. Main Initialization Steps in STARTUP.ASM Source Listing 10-16
Table 10-6. Relationship Between BLD Item and ASM Source File 10-27
Table 10-7. Microcode Update Field Definitions 10-28
Table 10-8. Microcode Update Format 10-30
Table 10-9. Extended Processor Signature Table Header Structure 10-31

PAGE

Table 10-10. Processor Signature Structure 10-31
Table 10-11. Processor Flags 10-33
Table 10-12. Microcode Update Signature 10-37
Table 10-13. Microcode Update Functions 10-42
Table 10-14. Parameters for the Presence Test 10-42
Table 10-15. Parameters for the Write Update Data Function 10-43
Table 10-16. Parameters for the Control Update Sub-function 10-47
Table 10-17. Mnemonic Values 10-47
Table 10-18. Parameters for the Read Microcode Update Data Function 10-47
Table 10-19. Return Code Definitions 10-49
Table 11-1. Local APIC Register Address Map 11-6
Table 11-2. Local APIC Timer Modes 11-17
Table 11-3. Valid Combinations for Pentium 4 and Intel Xeon Processors Local xAPIC Interrupt Command Register 11-21
Table 11-4. Valid Combinations for the P6 Family Processor Local APIC Interrupt Command Register 11-22
Table 11-5. x2APIC Operating Mode Configurations 11-37
Table 11-6. Local APIC Register Address Map Supported by x2APIC 11-38
Table 11-7. MSR/MMIO Interface of a Local x2APIC in Different Modes of Operation 11-40
Table 11-8. EOI Message (14 Cycles) 11-47
Table 11-9. Short Message (21 Cycles) 11-48
Table 11-10. Non-Focused Lowest Priority Message (34 Cycles) 11-49
Table 11-11. APIC Bus Status Cycles Interpretation 11-51
Table 12-1. Characteristics of the Caches, TLBs, Store Buffer, and Write Combining Buffer in Intel 64 and IA-32 Processors 12-2
Table 12-2. Memory Types and Their Properties 12-6
Table 12-3. Methods of Caching Available in Intel Core 2 Duo, Intel Atom, Intel Core Duo, Pentium M, Pentium 4, Intel Xeon, P6 Family, and Pentium Processors 12-7
Table 12-4. MESI Cache Line States 12-9
Table 12-5. Cache Operating Modes 12-12
Table 12-6. Effective Page-Level Memory Type for Pentium Pro and Pentium II Processors 12-14
Table 12-7. Effective Page-Level Memory Types for Pentium III and More Recent Processor Families 12-15
Table 12-8. Memory Types That Can Be Encoded in MTRRs 12-21
Table 12-9. Address Mapping for Fixed-Range MTRRs 12-24
Table 12-10. Memory Types That Can Be Encoded With PAT 12-34
Table 12-11. Selection of PAT Entries with PAT, PCD, and PWT Flags 12-35
Table 12-12. Memory Type Setting of PAT Entries Following a Power-up or Reset 12-35
Table 13-1. Action Taken By MMX Instructions for Different Combinations of EM, MP, and TS 13-1
Table 13-3. Effect of the MMX, x87 FPU, and FXSAVE/FXRSTOR Instructions on the x87 FPU Tag Word 13-3
Table 13-2. Effects of MMX Instructions on x87 FPU State 13-3
Table 14-1. Action Taken for Combinations of OSFXSR, OSXMMEXCPT, SSE, SSE2, SSE3, EM, MP, and TS 14-3
Table 14-2. Action Taken for Combinations of OSFXSR, SSSE3, SSE4, EM, and TS 14-4
Table 14-3. CPUID.(EAX=0DH, ECX=1) EAX Bit Assignment 14-8
Table 15-1. Architectural and Non-Architectural MSRs Related to HWP 15-6
Table 15-2. IA32_HWP_CTL MSR Bit 0 Behavior 15-13
Table 15-3. Architectural and non-Architecture MSRs Related to HDC 15-21
Table 15-4. Hardware Feedback Interface Structure 15-25
Table 15-5. Hardware Feedback Interface Global Header Structure 15-26
Table 15-6. Hardware Feedback Interface Logical Processor Entry Structure 15-26
Table 15-7. Intel® Thread Director Table Structure 15-27
Table 15-8. Intel® Thread Director Global Header Structure 15-28
Table 15-9. Intel® Thread Director Logical Processor Entry Structure 15-29
Table 15-10. IA32_HW_FEEDBACK_CONFIG Control Options 15-32
Table 15-11. On-Demand Clock Modulation Duty Cycle Field Encoding 15-40
Table 15-12. RAPL MSR Interfaces and RAPL Domains 15-50
Table 16-1. Bits 54:53 in IA32_MCi_STATUS MSRs when IA32_MCG_CAP[11] = 1 and UC = 0 16-7
Table 16-2. Overwrite Rules for Enabled Errors 16-8
Table 16-3. Address Mode in IA32_MCi_MISC[8:6] 16-10
Table 16-4. Address Mode in IA32_MCi_MISC[8:6] 16-11
Table 16-5. Extended Machine Check State MSRs in Processors Without Support for Intel 64 Architecture 16-12
Table 16-6. Extended Machine Check State MSRs In Processors With Support For Intel 64 Architecture 16-12
Table 16-7. MC Error Classifications 16-18
Table 16-8. Overwrite Rules for UC, CE, and UCR Errors 16-19
Table 16-9. IA32_MCi_Status [15:0] Simple Error Code Encoding 16-21
Table 16-10. IA32_MCi_Status [15:0] Compound Error Code Encoding 16-21
Table 16-11. Encoding for TT (Transaction Type) Sub-Field 16-22
Table 16-12. Level Encoding for LL (Memory Hierarchy Level) Sub-Field 16-22
Table 16-13. Encoding of Request (RRRR) Sub-Field 16-23

PAGE

Table 16-14. Encodings of PP, T, and II Sub-Fields 16-23
Table 16-15. Encodings of MMM and CCCC Sub-Fields 16-24
Table 16-16. MCA Compound Error Code Encoding for SRAO Errors 16-24
Table 16-17. IA32_MCi_STATUS Values for SRAO Errors 16-25
Table 16-18. IA32_MCG_STATUS Flag Indication for SRAO Errors 16-25
Table 16-19. MCA Compound Error Code Encoding for SRAR Errors 16-25
Table 16-20. IA32_MCi_STATUS Values for SRAR Errors 16-26
Table 16-21. IA32_MCG_STATUS Flag Indication for SRAR Errors 16-26
Table 17-1. CPUID DisplayFamily_DisplayModel Signatures for Processor Family 06H 17-1
Table 17-2. Incremental Decoding Information: Processor Family 06H Machine Error Codes for Machine Check 17-1
Table 17-3. CPUID DisplayFamily_DisplayModel Signatures for Processors Based on Intel® Core™ Microarchitecture 17-3
Table 17-4. Incremental Bus Error Codes of Machine Check for Processors Based on Intel® Core™ Microarchitecture 17-4
Table 17-5. Incremental MCA Error Code Types for Intel® Xeon® Processor 7400 17-6
Table 17-6. Type B: Bus and Interconnect Error Codes 17-6
Table 17-7. Type C: Cache Bus Controller Error Codes 17-7
Table 17-8. Intel® QPI Machine Check Error Codes for IA32_MC0_STATUS and IA32_MC1_STATUS 17-8
Table 17-9. Intel® QPI Machine Check Error Codes for IA32_MC0_MISC and IA32_MC1_MISC 17-8
Table 17-10. Machine Check Error Codes for IA32_MC7_STATUS 17-9
Table 17-11. Incremental Memory Controller Error Codes of Machine Check for IA32_MC8_STATUS 17-9
Table 17-12. Incremental Memory Controller Error Codes of Machine Check for IA32_MC8_MISC 17-10
Table 17-13. Machine Check Error Codes for IA32_MC4_STATUS 17-10
Table 17-14. Intel® QPI MC Error Codes for IA32_MC6_STATUS and IA32_MC7_STATUS 17-11
Table 17-15. Intel IMC MC Error Codes for IA32_MCi_STATUS (i= 8, 11) 17-12
Table 17-16. Intel IMC MC Error Codes for IA32_MCi_MISC (i= 8, 11) 17-12
Table 17-17. Machine Check Error Codes for IA32_MC4_STATUS 17-13
Table 17-18. Intel IMC MC Error Codes for IA32_MCi_STATUS (i= 9—16) 17-14
Table 17-19. Intel IMC MC Error Codes for IA32_MCi_MISC (i= 9—16) 17-15
Table 17-20. Machine Check Error Codes for IA32_MC4_STATUS 17-16
Table 17-21. Intel® QPI MC Error Codes for IA32_MCi_STATUS (i = 5, 20, 21) 17-17
Table 17-22. Intel IMC MC Error Codes for IA32_MCi_STATUS (i= 9—16) 17-18
Table 17-23. Intel IMC MC Error Codes for IA32_MCi_MISC (i= 9—16) 17-18
Table 17-24. Machine Check Error Codes for IA32_MC4_STATUS 17-19
Table 17-25. Intel IMC MC Error Codes for IA32_MCi_STATUS (i= 9—10) 17-20
Table 17-26. Intel IMC MC Error Codes for IA32_MCi_STATUS (i= 9—16) 17-21
Table 17-27. Intel HA MC Error Codes for IA32_MCi_MISC (i= 7, 8) 17-22
Table 17-28. Machine Check Error Codes for IA32_MC4_STATUS 17-22
Table 17-29. Interconnect MC Error Codes for IA32_MCi_STATUS (i = 5, 12, 19) 17-24
Table 17-30. Intel IMC MC Error Codes for IA32_MCi_STATUS (i= 13—18) 17-26
Table 17-31. M2M MC Error Codes for IA32_MCi_STATUS (i= 7, 8) 17-27
Table 17-32. Intel HA MC Error Codes for IA32_MCi_MISC (i= 7, 8) 17-27
Table 17-33. Intel IMC MC Error Codes for IA32_MCi_STATUS (i= 6, 7) 17-28
Table 17-34. Machine Check Error Codes for IA32_MC4_STATUS 17-29
Table 17-35. Interconnect MC Error Codes for IA32_MCi_STATUS (i = 5, 7, 8) 17-31
Table 17-36. MSRs Reporting MC Error Codes by CPUID DisplayFamily_DisplaySignature 17-32
Table 17-37. Intel IMC MC Error Codes for IA32_MCi_STATUS (i= 13—14, 17—18, 21—22, 25—26) 17-33
Table 17-38. Additional Information Reported in IA32_MCi_MISC (i= 13—14, 17—18, 21—22, 25—26) 17-35
Table 17-39. M2M MC Error Codes for IA32_MCi_STATUS (i= 12, 16, 20, 24) 17-36
Table 17-40. Machine Check Error Codes for IA32_MC4_STATUS 17-37
Table 17-41. Interconnect MC Error Codes for IA32_MC5_STATUS 17-40
Table 17-42. Intel IMC MC Error Codes for IA32_MCi_STATUS (i= 13—20) 17-41
Table 17-43. Additional Information Reported in IA32_MCi_MISC (i= 13—20) 17-43
Table 17-44. M2M MC Error Codes for IA32_MC12_STATUS 17-44
Table 17-45. Incremental Decoding Information: Processor Family 0FH, Machine Error Codes for Machine Check 17-45
Table 17-46. MCi_STATUS Register Bit Definition 17-46
Table 17-47. Incremental MCA Error Code for Intel® Xeon® Processor MP 7100 17-47
Table 17-48. Other Information Field Bit Definition 17-47
Table 17-49. Type A: L3 Error Codes 17-48
Table 17-50. Type B: Bus and Interconnect Error Codes 17-48
Table 17-51. Type C: Cache Bus Controller Error Codes 17-49
Table 17-52. Decoding Family 0FH Machine Check Codes for Cache Hierarchy Errors 17-50
Table 18-1. Breakpoint Examples 18-6
Table 18-2. Debug Exception Conditions 18-8
Table 18-3. Legacy and Streamlined Operation with Freeze_Perfmon_On_PMI = 1, Counter Overflowed 18-16
Table 18-4. LBR Stack Size and TOS Pointer Range 18-16
Table 18-5. IA32_DEBUGCTL Flag Encodings 18-24

PAGE

Table 18-6. CPL-Qualified Branch Trace Store Encodings 18-25
Table 18-7. MSR_LASTBRANCH_x_TO_IP for the Goldmont Microarchitecture 18-27
Table 18-8. MSR_LASTBRANCH_x_FROM_IP 18-29
Table 18-9. MSR_LASTBRANCH_x_TO_IP 18-30
Table 18-10. LBR Stack Size and TOS Pointer Range 18-30
Table 18-11. MSR_LBR_SELECT for Nehalem Microarchitecture 18-30
Table 18-12. MSR_LBR_SELECT for Sandy Bridge Microarchitecture 18-31
Table 18-13. MSR_LBR_SELECT for Haswell Microarchitecture 18-31
Table 18-14. MSR_LASTBRANCH_x_FROM_IP with TSX Information 18-32
Table 18-15. LBR Stack Size and TOS Pointer Range 18-33
Table 18-16. MSR_LBR_INFO_x 18-33
Table 18-17. LBR MSR Stack Size and TOS Pointer Range for the Pentium® 4 and the Intel® Xeon® Processor Family 18-36
Table 18-18. Monitoring Supported Event IDs 18-47
Table 18-19. Re-indexing of COS Numbers and Mapping to CAT/CDP Mask MSRs 18-61
Table 18-20. MBA Delay Value MSRs 18-67
Table 19-1. LBR IP Values for Various Operations 19-2
Table 19-2. Branch Type Filtering Details 19-3
Table 19-3. IA32_LBR_x_INFO and IA32_LER_INFO Branch Type Encodings 19-4
Table 19-4. LBR VMCS Fields 19-5
Table 20-1. UMask and Event Select Encodings for Pre-Defined Architectural Performance Events 20-5
Table 20-2. Association of Fixed-Function Performance Counters with Architectural Performance Events 20-9
Table 20-3. PEBS Record Format for Intel Core i7 Processor Family 20-20
Table 20-4. Data Source Encoding for Load Latency Record 20-23
Table 20-5. Off-Core Response Event Encoding 20-24
Table 20-6. MSR_OFFCORE_RSP_0 and MSR_OFFCORE_RSP_1 Bit Field Definition 20-25
Table 20-7. Opcode Field Encoding for MSR_UNCORE_ADDR_OPCODE_MATCH 20-30
Table 20-8. Uncore PMU MSR Summary 20-32
Table 20-9. Uncore PMU MSR Summary for Intel® Xeon® Processor E7 Family 20-33
Table 20-10. Core PMU Comparison 20-34
Table 20-11. PEBS Facility Comparison 20-37
Table 20-12. PEBS Performance Events for Sandy Bridge Microarchitecture 20-38
Table 20-13. Layout of Data Source Field of Load Latency Record 20-40
Table 20-15. Off-Core Response Event Encoding 20-41
Table 20-14. Layout of Precise Store Information In PEBS Record 20-41
Table 20-16. MSR_OFFCORE_RSP_x Request_Type Field Definition 20-42
Table 20-17. MSR_OFFCORE_RSP_x Response Supplier Info Field Definition 20-43
Table 20-18. MSR_OFFCORE_RSP_x Snoop Info Field Definition 20-44
Table 20-19. Uncore PMU MSR Summary 20-45
Table 20-20. MSR_OFFCORE_RSP_x Supplier Info Field Definitions 20-46
Table 20-21. Uncore PMU MSR Summary for Intel® Xeon® Processor E5 Family 20-47
Table 20-22. Core PMU Comparison 20-48
Table 20-23. PEBS Facility Comparison 20-48
Table 20-24. PEBS Record Format for 4th Generation Intel Core Processor Family 20-49
Table 20-25. Precise Events That Supports Data Linear Address Profiling 20-50
Table 20-26. Layout of Data Linear Address Information In PEBS Record 20-51
Table 20-27. MSR_OFFCORE_RSP_x Request_Type Definition (Haswell Microarchitecture) 20-51
Table 20-28. MSR_OFFCORE_RSP_x Supplier Info Field Definition (CPUID Signature 06_3CH, 06_46H) 20-52
Table 20-29. MSR_OFFCORE_RSP_x Supplier Info Field Definition (CPUID Signature 06_45H) 20-52
Table 20-30. MSR_OFFCORE_RSP_x Supplier Info Field Definition 20-53
Table 20-31. TX Abort Information Field Definition 20-55
Table 20-32. Uncore PMU MSR Summary 20-55
Table 20-33. Core PMU Comparison 20-57
Table 20-34. PEBS Facility Comparison 20-58
Table 20-35. PEBS Record Format for 6th Generation, 7th Generation and 8th Generation Intel Core Processor Families 20-59
Table 20-36. Precise Events for the Skylake, Kaby Lake and Coffee Lake Microarchitectures 20-60
Table 20-37. Layout of Data Linear Address Information In PEBS Record 20-61
Table 20-38. FrontEnd_Retired Sub-Event Encodings Supported by MSR_PEBS_FRONTEND.EVTSEL 20-62
Table 20-39. MSR_PEBS_FRONTEND Layout 20-62
Table 20-40. MSR_OFFCORE_RSP_x Request_Type Definition (Skylake, Kaby Lake, and Coffee Lake Microarchitectures) 20-63
Table 20-41. MSR_OFFCORE_RSP_x Supplier Info Field Definition (CPUID Signatures 06_4EH, 06_5EH, 06_8EH, and 06_9EH) 20-63
Table 20-42. MSR_OFFCORE_RSP_x Snoop Info Field Definition (CPUID Signatures 06_4EH, 06_5EH, 06_8EH, 06_9E, and 06_55H) 20-64
Table 20-44. MSR_OFFCORE_RSP_x Supplier Info Field Definition (CPUID Signature 06_55H) 20-65
Table 20-43. MSR_OFFCORE_RSP_x Request_Type Definition (Intel® Xeon® Scalable Processor Family) 20-65

PAGE

Table 20-45. MSR_OFFCORE_RSP_x Supplier Info Field Definition (CPUID Signature 06_55H, Steppings 0x5H - 0xFH) 20-66
Table 20-46. Core PMU Summary of the Ice Lake Microarchitecture 20-66
Table 20-47. MSR_OFFCORE_RSP_x Request_Type Definition (Processors Based on Ice Lake Microarchitecture) 20-67
Table 20-48. MSR_OFFCORE_RSP_x Supplier Info Field Definition (Processors Based on Ice Lake Microarchitecture) 20-68
Table 20-49. MSR_OFFCORE_RSP_x Snoop Info Field Definition (Processors Based on Ice Lake Microarchitecture) 20-69
Table 20-50. Core PMU Summary of the Golden Cove Microarchitecture 20-71
Table 20-51. Special Performance Monitoring Events with Counter Restrictions 20-72
Table 20-52. Core PMU Summary of the Gracemont Microarchitecture 20-73
Table 20-53. E-core PEBS Memory Access Info Encoding 20-73
Table 20-54. E-core PEBS Data Source Encodings 20-74
Table 20-55. MSR_OFFCORE_RSPx Request Type Definition 20-75
Table 20-56. PEBS Performance Events for the Knights Landing Microarchitecture 20-77
Table 20-57. PEBS Record Format for the Knights Landing Microarchitecture 20-77
Table 20-58. OffCore Response Event Encoding 20-78
Table 20-59. Bit fields of the MSR_OFFCORE_RESP [0, 1] Registers 20-78
Table 20-60. PEBS Performance Events for the Silvermont Microarchitecture 20-81
Table 20-62. OffCore Response Event Encoding 20-82
Table 20-61. PEBS Record Format for the Silvermont Microarchitecture 20-82
Table 20-63. MSR_OFFCORE_RSPx Request_Type Field Definition 20-83
Table 20-64. MSR_OFFCORE_RSP_x Response Supplier Info Field Definition 20-84
Table 20-65. MSR_OFFCORE_RSPx Snoop Info Field Definition 20-84
Table 20-66. Core PMU Comparison Between the Goldmont and Silvermont Microarchitectures 20-85
Table 20-67. Precise Events Supported by the Goldmont Microarchitecture 20-87
Table 20-68. PEBS Record Format for the Goldmont Microarchitecture 20-88
Table 20-69. MSR_OFFCORE_RSPx Request_Type Field Definition 20-89
Table 20-70. MSR_OFFCORE_RSPx For L2 Miss and Outstanding Requests 20-90
Table 20-71. Core PMU Comparison Between the Goldmont Plus and Goldmont Microarchitectures 20-91
Table 20-72. Core PMU Comparison Between the Tremont and Goldmont Plus Microarchitectures 20-92
Table 20-73. New Fields in IA32_PEBS_ENABLE 20-93
Table 20-74. MSR_OFFCORE_RSPx Request Type Definition 20-94
Table 20-75. MSR_OFFCORE_RSPx Response Type Definition 20-95
Table 20-76. MSR_OFFCORE_RSPx Snoop Info Definition 20-95
Table 20-77. Core Specificity Encoding within a Non-Architectural Umask 20-96
Table 20-78. Agent Specificity Encoding within a Non-Architectural Umask 20-97
Table 20-79. HW Prefetch Qualification Encoding within a Non-Architectural Umask 20-97
Table 20-80. MESI Qualification Definitions within a Non-Architectural Umask 20-97
Table 20-81. Bus Snoop Qualification Definitions within a Non-Architectural Umask 20-98
Table 20-82. Snoop Type Qualification Definitions within a Non-Architectural Umask 20-98
Table 20-83. At-Retirement Performance Events for Intel Core Microarchitecture 20-101
Table 20-84. PEBS Performance Events for Intel Core Microarchitecture 20-102
Table 20-85. Requirements to Program PEBS 20-103
Table 20-86. Performance Counter MSRs and Associated CCCR and ESCR MSRs (Processors Based on Intel NetBurst Microarchitecture) 20-104
Table 20-87. Event Example 20-111
Table 20-88. CCR Names and Bit Positions 20-115
Table 20-89. Effect of Logical Processor and CPL Qualification for Logical-Processor-Specific (TS) Events 20-123
Table 20-90. Effect of Logical Processor and CPL Qualification for Non-logical-Processor-specific (TI) Events 20-124
Table 20-91. Nominal Core Crystal Clock Frequency 20-140
Table 20-92. Basic Info Group 20-146
Table 20-93. Memory Access Info Group 20-147
Table 20-94. Updated Memory Access Info Group 20-148
Table 20-95. GPRs in Ice Lake Microarchitecture 20-149
Table 20-96. XMMs 20-149
Table 20-97. LBRs 20-150
Table 20-98. MSR_PEBS_CFG Programming 20-151
Table 20-99. PEBS Record Example 1 20-151
Table 20-100. PEBS Record Example 2 20-152
Table 20-101. Data Source Encoding for Memory Accesses (Ice Lake and Later Microarchitectures) 20-155
Table 21-1. Real-Address Mode Exceptions and Interrupts 21-6
Table 21-2. Software Interrupt Handling Methods While in Virtual-8086 Mode 21-17
Table 22-1. Characteristics of 16-Bit and 32-Bit Program Modules 22-1
Table 23-1. New Instruction in the Pentium Processor and Later IA-32 Processors 23-4
Table 23-3. EM and MP Flag Interpretation 23-17
Table 23-2. Recommended Values of the EM, MP, and NE Flags for Intel486 SX Microprocessor/Intel 487 SX Math Coprocessor System 23-17

PAGE

Table 23-4. Exception Conditions for Legacy SIMD/MMX Instructions with FP Exception and 16-Byte Alignment 23-22
Table 23-5. Exception Conditions for Legacy SIMD/MMX Instructions with XMM and FP Exception 23-23
Table 23-6. Exception Conditions for Legacy SIMD/MMX Instructions with XMM and without FP Exception 23-24
Table 23-7. Exception Conditions for SIMD/MMX Instructions with Memory Reference 23-25
Table 23-8. Exception Conditions for Legacy SIMD/MMX Instructions without FP Exception 23-26
Table 23-9. Exception Conditions for Legacy SIMD/MMX Instructions without Memory Reference 23-27
Table 23-10. Processor State Following Power-up/Reset/INIT for Pentium, Pentium Pro and Pentium 4 Processors 23-37
Table 25-1. Format of the VMCS Region 25-2
Table 25-2. Format of Access Rights 25-4
Table 25-3. Format of Interruptibility State 25-6
Table 25-4. Format of Pending-Debug-Exceptions 25-7
Table 25-5. Definitions of Pin-Based VM-Execution Controls 25-10
Table 25-6. Definitions of Primary Processor-Based VM-Execution Controls 25-10
Table 25-7. Definitions of Secondary Processor-Based VM-Execution Controls 25-12
Table 25-8. Definitions of Tertiary Processor-Based VM-Execution Controls 25-13
Table 25-9. Format of Extended-Page-Table Pointer 25-16
Table 25-10. Definitions of VM-Function Controls 25-18
Table 25-11. Format of Sub-Page-Permission-Table Pointer 25-19
Table 25-12. Format of Hypervisor-Managed Linear-Address Translation Pointer 25-20
Table 25-13. Definitions of Primary VM-Exit Controls 25-21
Table 25-14. Format of an MSR Entry 25-22
Table 25-15. Definitions of VM-Entry Controls 25-23
Table 25-16. Format of the VM-Entry Interruption-Information Field 25-24
Table 25-17. Format of Exit Reason 25-25
Table 25-18. Format of the VM-Exit Interruption-Information Field 25-26
Table 25-19. Format of the IDT-Vectoring Information Field 25-27
Table 25-20. Structure of VMCS Component Encoding 25-29
Table 26-1. Format of the Virtualization-Exception Information Area 26-20
Table 28-1. Exit Qualification for Debug Exceptions 28-4
Table 28-2. Exit Qualification for Task Switches 28-5
Table 28-3. Exit Qualification for Control-Register Accesses 28-6
Table 28-4. Exit Qualification for MOV DR 28-8
Table 28-5. Exit Qualification for I/O Instructions 28-8
Table 28-6. Exit Qualification for APIC-Access VM Exits from Linear Accesses and Guest-Physical Accesses 28-9
Table 28-7. Exit Qualification for EPT Violations 28-10
Table 28-8. Format of the VM-Exit Instruction-Information Field as Used for INS and OUTS 28-15
Table 28-9. Format of the VM-Exit Instruction-Information Field as Used for INVEPT, INVPCID, and INVVPID 28-16
Table 28-10. Format of the VM-Exit Instruction-Information Field as Used for LIDT, LGDT, SIDT, or SGDT 28-17
Table 28-11. Format of the VM-Exit Instruction-Information Field as Used for LLDT, LTR, SLDT, and STR 28-18
Table 28-12. Format of the VM-Exit Instruction-Information Field as Used for RDRAND, RDSEED, TPAUSE, and UMWAIT 28-19
Table 28-13. Format of the VM-Exit Instruction-Information Field as Used for VMCLEAR, VMPTRLD, VMPTRST, VMXON, XRSTORS, and XSAVES 28-20
Table 28-14. Format of the VM-Exit Instruction-Information Field as Used for VMREAD and VMWRITE 28-21
Table 28-15. Format of the VM-Exit Instruction-Information Field as Used for LOADIWKEY 28-22
Table 29-1. Format of an EPT PML4 Entry (PML4E) that References an EPT Page-Directory-Pointer Table 29-4
Table 29-2. Format of an EPT Page-Directory-Pointer-Table Entry (PDPTE) that Maps a 1-GByte Page 29-5
Table 29-3. Format of an EPT Page-Directory-Pointer-Table Entry (PDPTE) that References an EPT Page Directory 29-6
Table 29-4. Format of an EPT Page-Directory Entry (PDE) that Maps a 2-MByte Page 29-7
Table 29-5. Format of an EPT Page-Directory Entry (PDE) that References an EPT Page Table 29-8
Table 29-6. Format of an EPT Page-Table Entry that Maps a 4-KByte Page 29-10
Table 30-1. Format of Posted-Interrupt Descriptor 30-15
Table 31-1. VM-Instruction Error Numbers 31-31
Table 32-1. SMRAM State Save Map 32-5
Table 32-2. Processor Signatures and 64-bit SMRAM State Save Map Format 32-6
Table 32-3. SMRAM State Save Map for Intel 64 Architecture 32-7
Table 32-4. Processor Register Initialization in SMM 32-9
Table 32-5. I/O Instruction Information in the SMM State Save Map 32-12
Table 32-6. I/O Instruction Type Encodings 32-12
Table 32-7. Auto HALT Restart Flag Values 32-14
Table 32-8. I/O Instruction Restart Field Values 32-16
Table 32-9. Exit Qualification for SMIs That Arrive Immediately After the Retirement of an I/O Instruction 32-21
Table 32-10. Format of MSEG Header 32-25
Table 33-1. COFI Type for Branch Instructions 33-3
Table 33-2. IP Filtering Packet Example 33-7
Table 33-3. ToPA Table Entry Fields 33-12

PAGE

Table 33-4. Algorithm to Manage Intel PT ToPA PMI and XSAVES/XRSTORS....33-15
Table 33-5. Behavior on Restricted Memory Access....33-16
Table 33-6. IA32_RTIT_CTL MSR....33-17
Table 33-7. IA32_RTIT_STATUS MSR....33-21
Table 33-8. IA32_RTIT_OUTPUT_BASE MSR....33-23
Table 33-10. TSX Packet Scenarios with BranchEn=1....33-24
Table 33-9. IA32_RTIT_OUTPUT_MASK_PTRS MSR....33-24
Table 33-11. CPUID Leaf 14H Enumeration of Intel Processor Trace Capabilities....33-27
Table 33-12. CPUID Leaf 14H, sub-leaf 1H Enumeration of Intel Processor Trace Capabilities....33-29
Table 33-13. An Illustrative CYC Packet Example....33-34
Table 33-14. Compound Packet Event Summary....33-37
Table 33-15. Packets Forbidden Between BBP and BEP....33-37
Table 33-16. TNT Packet Definition....33-39
Table 33-17. IP Packet Definition....33-40
Table 33-18. FUP/TIP IP Reconstruction....33-41
Table 33-19. TNT Examples with Deferred TIPs....33-42
Table 33-20. TIP.PGE Packet Definition....33-43
Table 33-21. TIP.PGD Packet Definition....33-44
Table 33-22. FUP Packet Definition....33-45
Table 33-23. FUP Cases and IP Payload....33-46
Table 33-24. PIP Packet Definition....33-47
Table 33-25. General Form of MODE Packets....33-48
Table 33-26. MODE.Exec Packet Definition....33-48
Table 33-27. MODE.TSX Packet Definition....33-49
Table 33-28. TraceStop Packet Definition....33-50
Table 33-29. CBR Packet Definition....33-50
Table 33-30. TSC Packet Definition....33-51
Table 33-31. MTC Packet Definition....33-52
Table 33-32. TMA Packet Definition....33-53
Table 33-33. Cycle Count Packet Definition....33-54
Table 33-34. VMCS Packet Definition....33-55
Table 33-35. OVF Packet Definition....33-56
Table 33-36. PSB Packet Definition....33-56
Table 33-37. PSBEND Packet Definition....33-57
Table 33-38. MNT Packet Definition....33-58
Table 33-39. PAD Packet Definition....33-58
Table 33-40. PTW Packet Definition....33-59
Table 33-41. EXSTOP Packet Definition....33-60
Table 33-42. MWAIT Packet Definition....33-61
Table 33-43. PWRE Packet Definition....33-62
Table 33-44. PWRX Packet Definition....33-63
Table 33-45. Block Begin Packet Definition....33-64
Table 33-46. Block Item Packet Definition....33-65
Table 33-47. BIP Encodings....33-65
Table 33-48. Block End Packet Definition....33-70
Table 33-49. Control Flow Event Packet Definition....33-71
Table 33-50. CFE Packet Type and Vector Fields Details....33-71
Table 33-51. Event Data Packet Definition....33-73
Table 33-52. VMX Controls For Intel Processor Trace....33-74
Table 33-53. Packets on VMX Transitions (System-Wide Tracing)....33-75
Table 33-54. Packets on a Failed VM Entry....33-76
Table 33-55. Packet Generation under Different Example Operations....33-77
Table 33-56. Packet Generation with Operations That Alter the Value of PacketEn....33-78
Table 33-57. Examples of PTWRITE when TriggerEn && PTWEn is True....33-79
Table 33-58. Examples of Power Event Trace when TriggerEn && PwrEvtEn is True....33-79
Table 33-59. Event Trace Examples when TriggerEn && ContextEn && EventEn is True....33-80
Table 34-1. Supervisor and User Mode Enclave Instruction Leaf Functions in Long-Form of SGX1....34-3
Table 34-2. Supervisor and User Mode Enclave Instruction Leaf Functions in Long-Form of SGX2....34-4
Table 34-3. VMX Operation and Supervisor Mode Enclave Instruction Leaf Functions in Long-Form of OVERSUB....34-4
Table 34-4. Intel® SGX Opt-in and Enabling Behavior....34-5
Table 34-5. CPUID Leaf 12H, Sub-Leaf 0 Enumeration of Intel® SGX Capabilities....34-5
Table 34-6. CPUID Leaf 12H, Sub-Leaf 1 Enumeration of Intel® SGX Capabilities....34-6
Table 34-7. CPUID Leaf 12H, Sub-Leaf Index 2 or Higher Enumeration of Intel® SGX Resources....34-6
Table 35-1. List of Implicit and Explicit Memory Access by Intel® SGX Enclave Instructions....35-3
Table 35-2. Layout of SGX Enclave Control Structure (SECS)....35-5

PAGE

Table 35-3. Layout of ATTRIBUTES Structure 35-6
Table 35-4. Bit Vector Layout of MISCSELECT Field of Extended Information 35-6
Table 35-5. Bit Vector Layout of CET_ATTRIBUTES Field of Extended Information 35-7
Table 35-6. Layout of Thread Control Structure (TCS) 35-7
Table 35-7. Layout of TCS.FLAGS Field 35-8
Table 35-8. Top-to-Bottom Layout of an SSA Frame 35-8
Table 35-9. Layout of GPRSGX Portion of the State Save Area 35-9
Table 35-10. Layout of EXITINFO Field 35-10
Table 35-11. Exception Vectors 35-10
Table 35-12. Layout of MISC region of the State Save Area 35-11
Table 35-13. Layout of EXINFO Structure 35-11
Table 35-14. Page Fault Error Code 35-11
Table 35-15. Layout of CET State Save Area Frame 35-12
Table 35-16. Layout of PAGEINFO Data Structure 35-12
Table 35-17. Layout of SECINFO Data Structure 35-12
Table 35-18. Layout of SECINFO.FLAGS Field 35-13
Table 35-19. Supported PAGE_TYPE 35-13
Table 35-20. Layout of PCMD Data Structure 35-14
Table 35-21. Layout of Enclave Signature Structure (SIGSTRUCT) 35-14
Table 35-23. Layout of REPORT 35-16
Table 35-22. Layout of EINIT Token (EINITTOKEN) 35-16
Table 35-24. Layout of TARGETINFO Data Structure 35-17
Table 35-25. Layout of KEYREQUEST Data Structure 35-18
Table 35-26. Supported KEYName Values 35-18
Table 35-27. Layout of KEYPOLICY Field 35-18
Table 35-28. Layout of Version Array Data Structure 35-19
Table 35-29. Content of an Enclave Page Cache Map Entry 35-19
Table 35-30. Layout of RDINFO Structure 35-20
Table 35-31. Layout of RDINFO STATUS Structure 35-20
Table 35-32. Layout of RDINFO FLAGS Structure 35-20
Table 36-1. Illegal Instructions Inside an Enclave 36-14
Table 37-1. GPR, x87 Synthetic States on Asynchronous Enclave Exit 37-3
Table 38-1. Register Usage of Privileged Enclave Instruction Leaf Functions 38-1
Table 38-2. Register Usage of Unprivileged Enclave Instruction Leaf Functions 38-2
Table 38-3. Register Usage of Virtualization Operation Enclave Instruction Leaf Functions 38-2
Table 38-4. Error or Information Codes for Intel® SGX Instructions 38-2
Table 38-5. List of Internal CREG 38-3
Table 38-6. Base Concurrency Restrictions 38-5
Table 38-7. Additional Concurrency Restrictions 38-6
Table 38-8. Base Concurrency Restrictions of EADD 38-17
Table 38-9. Additional Concurrency Restrictions of EADD 38-18
Table 38-10. Base Concurrency Restrictions of EAUG 38-22
Table 38-11. Additional Concurrency Restrictions of EAUG 38-23
Table 38-12. EBLOCK Return Value in RAX 38-27
Table 38-13. Base Concurrency Restrictions of EBLOCK 38-27
Table 38-14. Additional Concurrency Restrictions of EBLOCK 38-28
Table 38-15. Base Concurrency Restrictions of ECREATE 38-30
Table 38-16. Additional Concurrency Restrictions of ECREATE 38-31
Table 38-17. EDBGRD Return Value in RAX 38-36
Table 38-18. Base Concurrency Restrictions of EDBGRD 38-37
Table 38-19. Additional Concurrency Restrictions of EDBGRD 38-37
Table 38-20. EDBGWR Return Value in RAX 38-40
Table 38-21. Base Concurrency Restrictions of EDBGWR 38-41
Table 38-22. Additional Concurrency Restrictions of EDBGWR 38-41
Table 38-23. Base Concurrency Restrictions of EEXTEND 38-44
Table 38-24. Additional Concurrency Restrictions of EEXTEND 38-45
Table 38-25. EINIT Return Value in RAX 38-48
Table 38-26. Base Concurrency Restrictions of EINIT 38-49
Table 38-27. Additional Concurrency Restrictions of ENIT 38-49
Table 38-28. ELDB/ELDU/ELDBC/ELBUC Return Value in RAX 38-55
Table 38-29. Base Concurrency Restrictions of ELDB/ELDU/ELDBC/ELBUC 38-56
Table 38-30. Additional Concurrency Restrictions of ELDB/ELDU/ELDBC/ELBUC 38-56
Table 38-31. EMODPR Return Value in RAX 38-61
Table 38-32. Base Concurrency Restrictions of EMODPR 38-61
Table 38-33. Additional Concurrency Restrictions of EMODPR 38-62

PAGE

Table 38-34. EMODT Return Value in RAX 38-64
Table 38-35. Base Concurrency Restrictions of EMODT 38-64
Table 38-36. Additional Concurrency Restrictions of EMODT 38-65
Table 38-37. Base Concurrency Restrictions of EPA 38-67
Table 38-38. Additional Concurrency Restrictions of EPA 38-67
Table 38-39. ERDINFO Return Value in RAX 38-69
Table 38-40. Base Concurrency Restrictions of ERDINFO 38-70
Table 38-41. Additional Concurrency Restrictions of ERDINFO 38-70
Table 38-42. EREMOVE Return Value in RAX 38-73
Table 38-43. Base Concurrency Restrictions of EREMOVE 38-74
Table 38-44. Additional Concurrency Restrictions of EREMOVE 38-74
Table 38-45. ETRACK Return Value in RAX 38-77
Table 38-46. Base Concurrency Restrictions of ETRACK 38-77
Table 38-47. Additional Concurrency Restrictions of ETRACK 38-77
Table 38-48. ETRACKC Return Value in RAX 38-80
Table 38-49. Base Concurrency Restrictions of ETRACKC 38-80
Table 38-50. Additional Concurrency Restrictions of ETRACKC 38-81
Table 38-51. EWB Return Value in RAX 38-84
Table 38-52. Base Concurrency Restrictions of EWB 38-84
Table 38-53. Additional Concurrency Restrictions of EWB 38-84
Table 38-54. EACCEPT Return Value in RAX 38-90
Table 38-55. Base Concurrency Restrictions of EACCEPT 38-91
Table 38-56. Additional Concurrency Restrictions of EACCEPT 38-91
Table 38-57. EACCEPTCOPY Return Value in RAX 38-95
Table 38-58. Base Concurrency Restrictions of EACCEPTCOPY 38-96
Table 38-59. Additional Concurrency Restrictions of EACCEPTCOPY 38-96
Table 38-60. Base Concurrency Restrictions of EENTER 38-100
Table 38-61. Additional Concurrency Restrictions of EENTER 38-100
Table 38-62. Base Concurrency Restrictions of EEXIT 38-108
Table 38-63. Additional Concurrency Restrictions of EEXIT 38-108
Table 38-64. Key Derivation 38-112
Table 38-65. EGETKEY Return Value in RAX 38-112
Table 38-66. Base Concurrency Restrictions of EGETKEY 38-112
Table 38-67. Additional Concurrency Restrictions of EGETKEY 38-113
Table 38-68. Base Concurrency Restrictions of EMODPE 38-121
Table 38-69. Additional Concurrency Restrictions of EMODPE 38-121
Table 38-70. Base Concurrency Restrictions of EREPORT 38-125
Table 38-71. Additional Concurrency Restrictions of EREPORT 38-125
Table 38-72. Base Concurrency Restrictions of ERESUME 38-130
Table 38-73. Additional Concurrency Restrictions of ERESUME 38-130
Table 38-74. Base Concurrency Restrictions of EDECVIRTCHILD 38-140
Table 38-75. Additional Concurrency Restrictions of EDECVIRTCHILD 38-141
Table 38-76. Base Concurrency Restrictions of EINCVIRTCHILD 38-144
Table 38-77. Additional Concurrency Restrictions of EINCVIRTCHILD 38-145
Table 38-78. Base Concurrency Restrictions of ESETCONTEXT 38-147
Table 38-79. Additional Concurrency Restrictions of ESETCONTEXT 38-148
Table 39-1. SGX Conflict Exit Qualification 39-4
Table 39-2. SMRAM Synthetic States on Asynchronous Enclave Exit 39-11
Table 39-3. Layout of the IA32_SGX_SVN_STATUS MSR 39-13
Table A-1. Memory Types Recommended for VMCS and Related Data Structures A-1
Table B-1. Encoding for 16-Bit Control Fields (0000_00xx_xxxx_xxx0B) B-1
Table B-2. Encodings for 16-Bit Guest-State Fields (0000_10xx_xxxx_xxx0B) B-1
Table B-3. Encodings for 16-Bit Host-State Fields (0000_11xx_xxxx_xxx0B) B-2
Table B-4. Encodings for 64-Bit Control Fields (0010_00xx_xxxx_xxxAb) B-2
Table B-5. Encodings for 64-Bit Read-Only Data Field (0010_01xx_xxxx_xxxAb) B-5
Table B-6. Encodings for 64-Bit Guest-State Fields (0010_10xx_xxxx_xxxAb) B-5
Table B-7. Encodings for 64-Bit Host-State Fields (0010_11xx_xxxx_xxxAb) B-6
Table B-8. Encodings for 32-Bit Control Fields (0100_00xx_xxxx_xxx0B) B-7
Table B-9. Encodings for 32-Bit Read-Only Data Fields (0100_01xx_xxxx_xxx0B) B-8
Table B-10. Encodings for 32-Bit Guest-State Fields (0100_10xx_xxxx_xxx0B) B-8
Table B-11. Encoding for 32-Bit Host-State Field (0100_11xx_xxxx_xxx0B) B-9
Table B-12. Encodings for Natural-Width Control Fields (0110_00xx_xxxx_xxx0B) B-9
Table B-13. Encodings for Natural-Width Read-Only Data Fields (0110_01xx_xxxx_xxx0B) B-10
Table B-14. Encodings for Natural-Width Guest-State Fields (0110_10xx_xxxx_xxx0B) B-10
Table B-15. Encodings for Natural-Width Host-State Fields (0110_11xx_xxxx_xxx0B) B-12

PAGE

Table C-1. Basic Exit Reasons C-1

CONTENTS

PAGE

CHAPTER 1
ABOUT THIS MANUAL

The *Intel® 64 and IA-32 Architectures Software Developer's Manual, Volume 3A: System Programming Guide, Part 1* (order number 253668), the *Intel® 64 and IA-32 Architectures Software Developer's Manual, Volume 3B: System Programming Guide, Part 2* (order number 253669), the *Intel® 64 and IA-32 Architectures Software Developer's Manual, Volume 3C*: *System Programming Guide, Part 3* (order number 326019), and the *Intel® 64 and IA-32 Architectures Software Developer's Manual, Volume 3D:System Programming Guide, Part 4* (order number 332831) are part of a set that describes the architecture and programming environment of Intel 64 and IA-32 Architecture processors. The other volumes in this set are:

- *Intel® 64 and IA-32 Architectures Software Developer's Manual, Volume 1*: *Basic Architecture* (order number 253665).
- *Intel® 64 and IA-32 Architectures Software Developer's Manual, Volumes 2A, 2B, 2C & 2D: Instruction Set Reference* (order numbers 253666, 253667, 326018, and 334569).
- The *Intel® 64 and IA-32 Architectures Software Developer's Manual, Volume 4: Model-Specific Registers* (order number 335592).

The *Intel® 64 and IA-32 Architectures Software Developer's Manual, Volume 1,* describes the basic architecture and programming environment of Intel 64 and IA-32 processors. The *Intel® 64 and IA-32 Architectures Software Developer's Manual, Volumes 2A, 2B, 2C & 2D,* describe the instruction set of the processor and the opcode structure. These volumes apply to application programmers and to programmers who write operating systems or executives. The *Intel® 64 and IA-32 Architectures Software Developer's Manual, Volumes 3A, 3B, 3C & 3D*, describe the operating-system support environment of Intel 64 and IA-32 processors. These volumes target operating-system and BIOS designers. In addition, *Intel® 64 and IA-32 Architectures Software Developer's Manual, Volume 3B*, and *Intel® 64 and IA-32 Architectures Software Developer's Manual, Volume 3C* address the programming environment for classes of software that host operating systems. The *Intel® 64 and IA-32 Architectures Software Developer's Manual, Volume 4,* describes the model-specific registers of Intel 64 and IA-32 processors.

1.1 INTEL® 64 AND IA-32 PROCESSORS COVERED IN THIS MANUAL

This manual set includes information pertaining primarily to the most recent Intel 64 and IA-32 processors, which include:

- Pentium® processors
- P6 family processors
- Pentium® 4 processors
- Pentium® M processors
- Intel® Xeon® processors
- Pentium® D processors
- Pentium® processor Extreme Editions
- 64-bit Intel® Xeon® processors
- Intel® Core™ Duo processor
- Intel® Core™ Solo processor
- Dual-Core Intel® Xeon® processor LV
- Intel® Core™2 Duo processor
- Intel® Core™2 Quad processor Q6000 series
- Intel® Xeon® processor 3000, 3200 series
- Intel® Xeon® processor 5000 series
- Intel® Xeon® processor 5100, 5300 series

- Intel® Core™2 Extreme processor X7000 and X6800 series
- Intel® Core™2 Extreme QX6000 series
- Intel® Xeon® processor 7100 series
- Intel® Pentium® Dual-Core processor
- Intel® Xeon® processor 7200, 7300 series
- Intel® Core™2 Extreme QX9000 series
- Intel® Xeon® processor 5200, 5400, 7400 series
- Intel® Core™2 Extreme processor QX9000 and X9000 series
- Intel® Core™2 Quad processor Q9000 series
- Intel® Core™2 Duo processor E8000, T9000 series
- Intel Atom® processors 200, 300, D400, D500, D2000, N200, N400, N2000, E2000, Z500, Z600, Z2000, C1000 series are built from 45 nm and 32 nm processes.
- Intel® Core™ i7 processor
- Intel® Core™ i5 processor
- Intel® Xeon® processor E7-8800/4800/2800 product families
- Intel® Core™ i7-3930K processor
- 2nd generation Intel® Core™ i7-2xxx, Intel® Core™ i5-2xxx, Intel® Core™ i3-2xxx processor series
- Intel® Xeon® processor E3-1200 product family
- Intel® Xeon® processor E5-2400/1400 product family
- Intel® Xeon® processor E5-4600/2600/1600 product family
- 3rd generation Intel® Core™ processors
- Intel® Xeon® processor E3-1200 v2 product family
- Intel® Xeon® processor E5-2400/1400 v2 product families
- Intel® Xeon® processor E5-4600/2600/1600 v2 product families
- Intel® Xeon® processor E7-8800/4800/2800 v2 product families
- 4th generation Intel® Core™ processors
- The Intel® Core™ M processor family
- Intel® Core™ i7-59xx Processor Extreme Edition
- Intel® Core™ i7-49xx Processor Extreme Edition
- Intel® Xeon® processor E3-1200 v3 product family
- Intel® Xeon® processor E5-2600/1600 v3 product families
- 5th generation Intel® Core™ processors
- Intel® Xeon® processor D-1500 product family
- Intel® Xeon® processor E5 v4 family
- Intel Atom® processor X7-Z8000 and X5-Z8000 series
- Intel Atom® processor Z3400 series
- Intel Atom® processor Z3500 series
- 6th generation Intel® Core™ processors
- Intel® Xeon® processor E3-1500m v5 product family
- 7th generation Intel® Core™ processors
- Intel® Xeon Phi™ Processor 3200, 5200, 7200 Series
- Intel® Xeon® Scalable Processor Family
- 8th generation Intel® Core™ processors
- Intel® Xeon Phi™ Processor 7215, 7285, 7295 Series

- Intel® Xeon® E processors
- 9th generation Intel® Core™ processors
- 2nd generation Intel® Xeon® Scalable Processor Family
- 10th generation Intel® Core™ processors
- 11th generation Intel® Core™ processors
- 3rd generation Intel® Xeon® Scalable Processor Family
- 12th generation Intel® Core™ processors
- 13th generation Intel® Core™ processors
- 4th generation Intel® Xeon® Scalable Processor Family

P6 family processors are IA-32 processors based on the P6 family microarchitecture. This includes the Pentium® Pro, Pentium® II, Pentium® III, and Pentium® III Xeon® processors.

The Pentium® 4, Pentium® D, and Pentium® processor Extreme Editions are based on the Intel NetBurst® microarchitecture. Most early Intel® Xeon® processors are based on the Intel NetBurst® microarchitecture. Intel Xeon processor 5000, 7100 series are based on the Intel NetBurst® microarchitecture.

The Intel® Core™ Duo, Intel® Core™ Solo and dual-core Intel® Xeon® processor LV are based on an improved Pentium® M processor microarchitecture.

The Intel® Xeon® processor 3000, 3200, 5100, 5300, 7200, and 7300 series, Intel® Pentium® dual-core, Intel® Core™2 Duo, Intel® Core™2 Quad, and Intel® Core™2 Extreme processors are based on Intel® Core™ microarchitecture.

The Intel® Xeon® processor 5200, 5400, 7400 series, Intel® Core™2 Quad processor Q9000 series, and Intel® Core™2 Extreme processors QX9000, X9000 series, Intel® Core™2 processor E8000 series are based on Enhanced Intel® Core™ microarchitecture.

The Intel Atom® processors 200, 300, D400, D500, D2000, N200, N400, N2000, E2000, Z500, Z600, Z2000, C1000 series are based on the Intel Atom® microarchitecture and supports Intel 64 architecture.

P6 family, Pentium® M, Intel® Core™ Solo, Intel® Core™ Duo processors, dual-core Intel® Xeon® processor LV, and early generations of Pentium 4 and Intel Xeon processors support IA-32 architecture. The Intel® Atom™ processor Z5xx series support IA-32 architecture.

The Intel® Xeon® processor 3000, 3200, 5000, 5100, 5200, 5300, 5400, 7100, 7200, 7300, 7400 series, Intel® Core™2 Duo, Intel® Core™2 Extreme, Intel® Core™2 Quad processors, Pentium® D processors, Pentium® Dual-Core processor, newer generations of Pentium 4 and Intel Xeon processor family support Intel® 64 architecture.

The Intel® Core™ i7 processor and Intel® Xeon® processor 3400, 5500, 7500 series are based on 45 nm Nehalem microarchitecture. Westmere microarchitecture is a 32 nm version of the Nehalem microarchitecture. Intel® Xeon® processor 5600 series, Intel Xeon processor E7 and various Intel Core i7, i5, i3 processors are based on the Westmere microarchitecture. These processors support Intel 64 architecture.

The Intel® Xeon® processor E5 family, Intel® Xeon® processor E3-1200 family, Intel® Xeon® processor E7-8800/4800/2800 product families, Intel® Core™ i7-3930K processor, and 2nd generation Intel® Core™ i7-2xxx, Intel® Core™ i5-2xxx, Intel® Core™ i3-2xxx processor series are based on the Sandy Bridge microarchitecture and support Intel 64 architecture.

The Intel® Xeon® processor E7-8800/4800/2800 v2 product families, Intel® Xeon® processor E3-1200 v2 product family and 3rd generation Intel® Core™ processors are based on the Ivy Bridge microarchitecture and support Intel 64 architecture.

The Intel® Xeon® processor E5-4600/2600/1600 v2 product families, Intel® Xeon® processor E5-2400/1400 v2 product families and Intel® Core™ i7-49xx Processor Extreme Edition are based on the Ivy Bridge-E microarchitecture and support Intel 64 architecture.

The Intel® Xeon® processor E3-1200 v3 product family and 4th Generation Intel® Core™ processors are based on the Haswell microarchitecture and support Intel 64 architecture.

The Intel® Xeon® processor E5-2600/1600 v3 product families and the Intel® Core™ i7-59xx Processor Extreme Edition are based on the Haswell-E microarchitecture and support Intel 64 architecture.

The Intel Atom® processor Z8000 series is based on the Airmont microarchitecture.

The Intel Atom® processor Z3400 series and the Intel Atom® processor Z3500 series are based on the Silvermont microarchitecture.

The Intel® Core™ M processor family, 5th generation Intel® Core™ processors, Intel® Xeon® processor D-1500 product family and the Intel® Xeon® processor E5 v4 family are based on the Broadwell microarchitecture and support Intel 64 architecture.

The Intel® Xeon® Scalable Processor Family, Intel® Xeon® processor E3-1500m v5 product family and 6th generation Intel® Core™ processors are based on the Skylake microarchitecture and support Intel 64 architecture.

The 7th generation Intel® Core™ processors are based on the Kaby Lake microarchitecture and support Intel 64 architecture.

The Intel Atom® processor C series, the Intel Atom® processor X series, the Intel® Pentium® processor J series, the Intel® Celeron® processor J series, and the Intel® Celeron® processor N series are based on the Goldmont microarchitecture.

The Intel® Xeon Phi™ Processor 3200, 5200, 7200 Series is based on the Knights Landing microarchitecture and supports Intel 64 architecture.

The Intel® Pentium® Silver processor series, the Intel® Celeron® processor J series, and the Intel® Celeron® processor N series are based on the Goldmont Plus microarchitecture.

The 8th generation Intel® Core™ processors, 9th generation Intel® Core™ processors, and Intel® Xeon® E processors are based on the Coffee Lake microarchitecture and support Intel 64 architecture.

The Intel® Xeon Phi™ Processor 7215, 7285, 7295 Series is based on the Knights Mill microarchitecture and supports Intel 64 architecture.

The 2nd generation Intel® Xeon® Scalable Processor Family is based on the Cascade Lake product and supports Intel 64 architecture.

Some 10th generation Intel® Core™ processors are based on the Ice Lake microarchitecture, and some are based on the Comet Lake microarchitecture; both support Intel 64 architecture.

Some 11th generation Intel® Core™ processors are based on the Tiger Lake microarchitecture, and some are based on the Rocket Lake microarchitecture; both support Intel 64 architecture.

Some 3rd generation Intel® Xeon® Scalable Processor Family processors are based on the Cooper Lake product, and some are based on the Ice Lake microarchitecture; both support Intel 64 architecture.

The 12th generation Intel® Core™ processors supporting Alder Lake performance hybrid architecture support Intel 64 architecture.

The 13th generation Intel® Core™ processors are based on the Raptor Lake performance hybrid architecture and support Intel 64 architecture.

The 4th generation Intel® Xeon® Scalable Processor Family is based on Sapphire Rapids microarchitecture and supports Intel 64 architecture.

IA-32 architecture is the instruction set architecture and programming environment for Intel's 32-bit microprocessors. Intel® 64 architecture is the instruction set architecture and programming environment which is the superset of Intel's 32-bit and 64-bit architectures. It is compatible with the IA-32 architecture.

1.2 OVERVIEW OF THE SYSTEM PROGRAMMING GUIDE

A description of this manual's content follows[1]:

Chapter 1 — About This Manual. Gives an overview of all volumes of the *Intel® 64 and IA-32 Architectures Software Developer's Manual*. It also describes the notational conventions in these manuals and lists related Intel manuals and documentation of interest to programmers and hardware designers.

Chapter 2 — System Architecture Overview. Describes the modes of operation used by Intel 64 and IA-32 processors and the mechanisms provided by the architectures to support operating systems and executives,

1. Model-Specific Registers have been moved out of this volume and into a separate volume: *Intel® 64 and IA-32 Architectures Software Developer's Manual, Volume 4*.

including the system-oriented registers and data structures and the system-oriented instructions. The steps necessary for switching between real-address and protected modes are also identified.

Chapter 3 — Protected-Mode Memory Management. Describes the data structures, registers, and instructions that support segmentation and paging. The chapter explains how they can be used to implement a "flat" (unsegmented) memory model or a segmented memory model.

Chapter 4 — Paging. Describes the paging modes supported by Intel 64 and IA-32 processors.

Chapter 5 — Protection. Describes the support for page and segment protection provided in the Intel 64 and IA-32 architectures. This chapter also explains the implementation of privilege rules, stack switching, pointer validation, user mode, and supervisor mode.

Chapter 6 — Interrupt and Exception Handling. Describes the basic interrupt mechanisms defined in the Intel 64 and IA-32 architectures, shows how interrupts and exceptions relate to protection, and describes how the architecture handles each exception type. Reference information for each exception is given in this chapter. Includes programming the LINT0 and LINT1 inputs and gives an example of how to program the LINT0 and LINT1 pins for specific interrupt vectors.

Chapter 7 — User Interrupts. Describes user interrupts supported by Intel 64 and IA-32 processors.

Chapter 8 — Task Management. Describes mechanisms the Intel 64 and IA-32 architectures provide to support multitasking and inter-task protection.

Chapter 9 — Multiple-Processor Management. Describes the instructions and flags that support multiple processors with shared memory, memory ordering, and Intel® Hyper-Threading Technology. Includes MP initialization for P6 family processors and gives an example of how to use the MP protocol to boot P6 family processors in an MP system.

Chapter 10 — Processor Management and Initialization. Defines the state of an Intel 64 or IA-32 processor after reset initialization. This chapter also explains how to set up an Intel 64 or IA-32 processor for real-address mode operation and protected- mode operation, and how to switch between modes.

Chapter 11 — Advanced Programmable Interrupt Controller (APIC). Describes the programming interface to the local APIC and gives an overview of the interface between the local APIC and the I/O APIC. Includes APIC bus message formats and describes the message formats for messages transmitted on the APIC bus for P6 family and Pentium processors.

Chapter 12 — Memory Cache Control. Describes the general concept of caching and the caching mechanisms supported by the Intel 64 or IA-32 architectures. This chapter also describes the memory type range registers (MTRRs) and how they can be used to map memory types of physical memory. Information on using the new cache control and memory streaming instructions introduced with the Pentium III, Pentium 4, and Intel Xeon processors is also given.

Chapter 13 — Intel® MMX™ Technology System Programming. Describes those aspects of the Intel® MMX™ technology that must be handled and considered at the system programming level, including: task switching, exception handling, and compatibility with existing system environments.

Chapter 14 — System Programming For Instruction Set Extensions And Processor Extended States. Describes the operating system requirements to support SSE/SSE2/SSE3/SSSE3/SSE4 extensions, including task switching, exception handling, and compatibility with existing system environments. The latter part of this chapter describes the extensible framework of operating system requirements to support processor extended states. Processor extended state may be required by instruction set extensions beyond those of SSE/SSE2/SSE3/SSSE3/SSE4 extensions.

Chapter 15 — Power and Thermal Management. Describes facilities of Intel 64 and IA-32 architecture used for power management and thermal monitoring.

Chapter 16 — Machine-Check Architecture. Describes the machine-check architecture and machine-check exception mechanism found in the Pentium 4, Intel Xeon, and P6 family processors. Additionally, a signaling mechanism for software to respond to hardware corrected machine check error is covered.

Chapter 17 — Interpreting Machine-Check Error Codes. Gives an example of how to interpret the error codes for a machine-check error that occurred on a P6 family processor.

Chapter 18 — Debug, Branch Profile, TSC, and Resource Monitoring Features. Describes the debugging registers and other debug mechanism provided in Intel 64 or IA-32 processors. This chapter also describes the time-stamp counter.

Chapter 19 — Last Branch Records. Describes the Last Branch Records (architectural feature).

Chapter 20 — Performance Monitoring. Describes the Intel 64 and IA-32 architectures' facilities for monitoring performance.

Chapter 21 — 8086 Emulation. Describes the real-address and virtual-8086 modes of the IA-32 architecture.

Chapter 22 — Mixing 16-Bit and 32-Bit Code. Describes how to mix 16-bit and 32-bit code modules within the same program or task.

Chapter 23 — IA-32 Architecture Compatibility. Describes architectural compatibility among IA-32 processors.

Chapter 24 — Introduction to Virtual Machine Extensions. Describes the basic elements of virtual machine architecture and the virtual machine extensions for Intel 64 and IA-32 Architectures.

Chapter 25 — Virtual Machine Control Structures. Describes components that manage VMX operation. These include the working-VMCS pointer and the controlling-VMCS pointer.

Chapter 26 — VMX Non-Root Operation. Describes the operation of a VMX non-root operation. Processor operation in VMX non-root mode can be restricted programmatically such that certain operations, events or conditions can cause the processor to transfer control from the guest (running in VMX non-root mode) to the monitor software (running in VMX root mode).

Chapter 27 — VM Entries. Describes VM entries. VM entry transitions the processor from the VMM running in VMX root-mode to a VM running in VMX non-root mode. VM-Entry is performed by the execution of VMLAUNCH or VMRESUME instructions.

Chapter 28 — VM Exits. Describes VM exits. Certain events, operations or situations while the processor is in VMX non-root operation may cause VM-exit transitions. In addition, VM exits can also occur on failed VM entries.

Chapter 29 — VMX Support for Address Translation. Describes virtual-machine extensions that support address translation and the virtualization of physical memory.

Chapter 30 — APIC Virtualization and Virtual Interrupts. Describes the VMCS including controls that enable the virtualization of interrupts and the Advanced Programmable Interrupt Controller (APIC).

Chapter 31 — VMX Instruction Reference. Describes the virtual-machine extensions (VMX). VMX is intended for a system executive to support virtualization of processor hardware and a system software layer acting as a host to multiple guest software environments.

Chapter 32 — System Management Mode. Describes Intel 64 and IA-32 architectures' system management mode (SMM) facilities.

Chapter 33 — Intel® Processor Trace. Describes details of Intel® Processor Trace.

Chapter 34 — Introduction to Intel® Software Guard Extensions. Provides an overview of the Intel® Software Guard Extensions (Intel® SGX) set of instructions.

Chapter 35 — Enclave Access Control and Data Structures. Describes Enclave Access Control procedures and defines various Intel SGX data structures.

Chapter 36 — Enclave Operation. Describes enclave creation and initialization, adding pages and measuring an enclave, and enclave entry and exit.

Chapter 37 — Enclave Exiting Events. Describes enclave-exiting events (EEE) and asynchronous enclave exit (AEX).

Chapter 38 — SGX Instruction References. Describes the supervisor and user level instructions provided by Intel SGX.

Chapter 39 — Intel® SGX Interactions with IA32 and Intel® 64 Architecture. Describes the Intel SGX collection of enclave instructions for creating protected execution environments on processors supporting IA32 and Intel 64 architectures.

Chapter 40 — Enclave Code Debug and Profiling. Describes enclave code debug processes and options.

Appendix A — VMX Capability Reporting Facility. Describes the VMX capability MSRs. Support for specific VMX features is determined by reading capability MSRs.

Appendix B — Field Encoding in VMCS. Enumerates all fields in the VMCS and their encodings. Fields are grouped by width (16-bit, 32-bit, etc.) and type (guest-state, host-state, etc.).

Appendix C — VM Basic Exit Reasons. Describes the 32-bit fields that encode reasons for a VM exit. Examples of exit reasons include, but are not limited to: software interrupts, processor exceptions, software traps, NMIs, external interrupts, and triple faults.

1.3 NOTATIONAL CONVENTIONS

This manual uses specific notation for data-structure formats, for symbolic representation of instructions, and for hexadecimal and binary numbers. A review of this notation makes the manual easier to read.

1.3.1 Bit and Byte Order

In illustrations of data structures in memory, smaller addresses appear toward the bottom of the figure; addresses increase toward the top. Bit positions are numbered from right to left. The numerical value of a set bit is equal to two raised to the power of the bit position. Intel 64 and IA-32 processors are "little endian" machines; this means the bytes of a word are numbered starting from the least significant byte. Figure 1-1 illustrates these conventions.

1.3.2 Reserved Bits and Software Compatibility

In many register and memory layout descriptions, certain bits are marked as **reserved**. When bits are marked as reserved, it is essential for compatibility with future processors that software treat these bits as having a future, though unknown, effect. The behavior of reserved bits should be regarded as not only undefined, but unpredictable. Software should follow these guidelines in dealing with reserved bits:

- Do not depend on the states of any reserved bits when testing the values of registers which contain such bits. Mask out the reserved bits before testing.
- Do not depend on the states of any reserved bits when storing to memory or to a register.
- Do not depend on the ability to retain information written into any reserved bits.
- When loading a register, always load the reserved bits with the values indicated in the documentation, if any, or reload them with values previously read from the same register.

NOTE

Avoid any software dependence upon the state of reserved bits in Intel 64 and IA-32 registers. Depending upon the values of reserved register bits will make software dependent upon the unspecified manner in which the processor handles these bits. Programs that depend upon reserved values risk incompatibility with future processors.

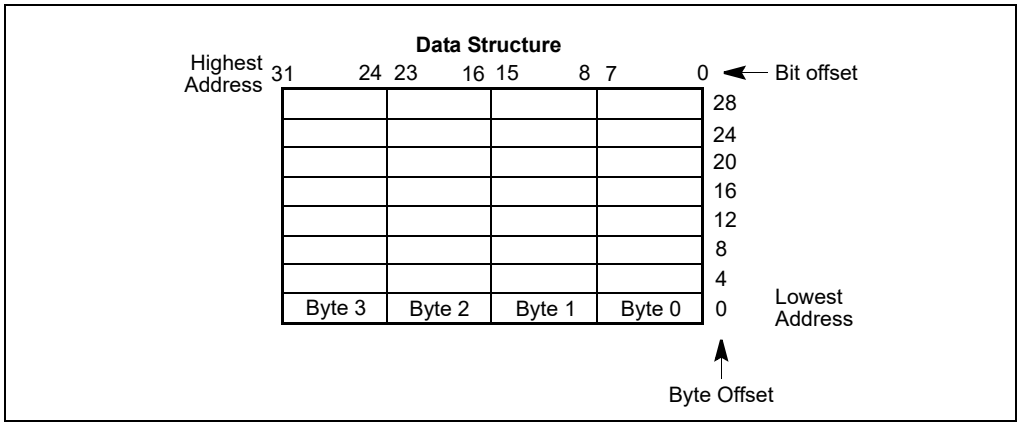

Figure 1-1. Bit and Byte Order

1.3.3 Instruction Operands

When instructions are represented symbolically, a subset of assembly language is used. In this subset, an instruction has the following format:

```
label: mnemonic argument1, argument2, argument3
```

where:

- A **label** is an identifier which is followed by a colon.
- A **mnemonic** is a reserved name for a class of instruction opcodes which have the same function.
- The operands **argument1**, **argument2**, and **argument3** are optional. There may be from zero to three operands, depending on the opcode. When present, they take the form of either literals or identifiers for data items. Operand identifiers are either reserved names of registers or are assumed to be assigned to data items declared in another part of the program (which may not be shown in the example).

When two operands are present in an arithmetic or logical instruction, the right operand is the source and the left operand is the destination.

For example:

```
LOADREG: MOV EAX, SUBTOTAL
```

In this example LOADREG is a label, MOV is the mnemonic identifier of an opcode, EAX is the destination operand, and SUBTOTAL is the source operand. Some assembly languages put the source and destination in reverse order.

1.3.4 Hexadecimal and Binary Numbers

Base 16 (hexadecimal) numbers are represented by a string of hexadecimal digits followed by the character H (for example, F82EH). A hexadecimal digit is a character from the following set: 0, 1, 2, 3, 4, 5, 6, 7, 8, 9, A, B, C, D, E, and F.

Base 2 (binary) numbers are represented by a string of 1s and 0s, sometimes followed by the character B (for example, 1010B). The "B" designation is only used in situations where confusion as to the type of number might arise.

1.3.5 Segmented Addressing

The processor uses byte addressing. This means memory is organized and accessed as a sequence of bytes. Whether one or more bytes are being accessed, a byte address is used to locate the byte or bytes memory. The range of memory that can be addressed is called an **address space**.

The processor also supports segmented addressing. This is a form of addressing where a program may have many independent address spaces, called **segments**. For example, a program can keep its code (instructions) and stack in separate segments. Code addresses would always refer to the code space, and stack addresses would always refer to the stack space. The following notation is used to specify a byte address within a segment:

Segment-register:Byte-address

For example, the following segment address identifies the byte at address FF79H in the segment pointed by the DS register:

```
DS:FF79H
```

The following segment address identifies an instruction address in the code segment. The CS register points to the code segment and the EIP register contains the address of the instruction.

```
CS:EIP
```

1.3.6 Syntax for CPUID, CR, and MSR Values

Obtain feature flags, status, and system information by using the CPUID instruction, by checking control register bits, and by reading model-specific registers. We are moving toward a single syntax to represent this type of information. See Figure 1-2.

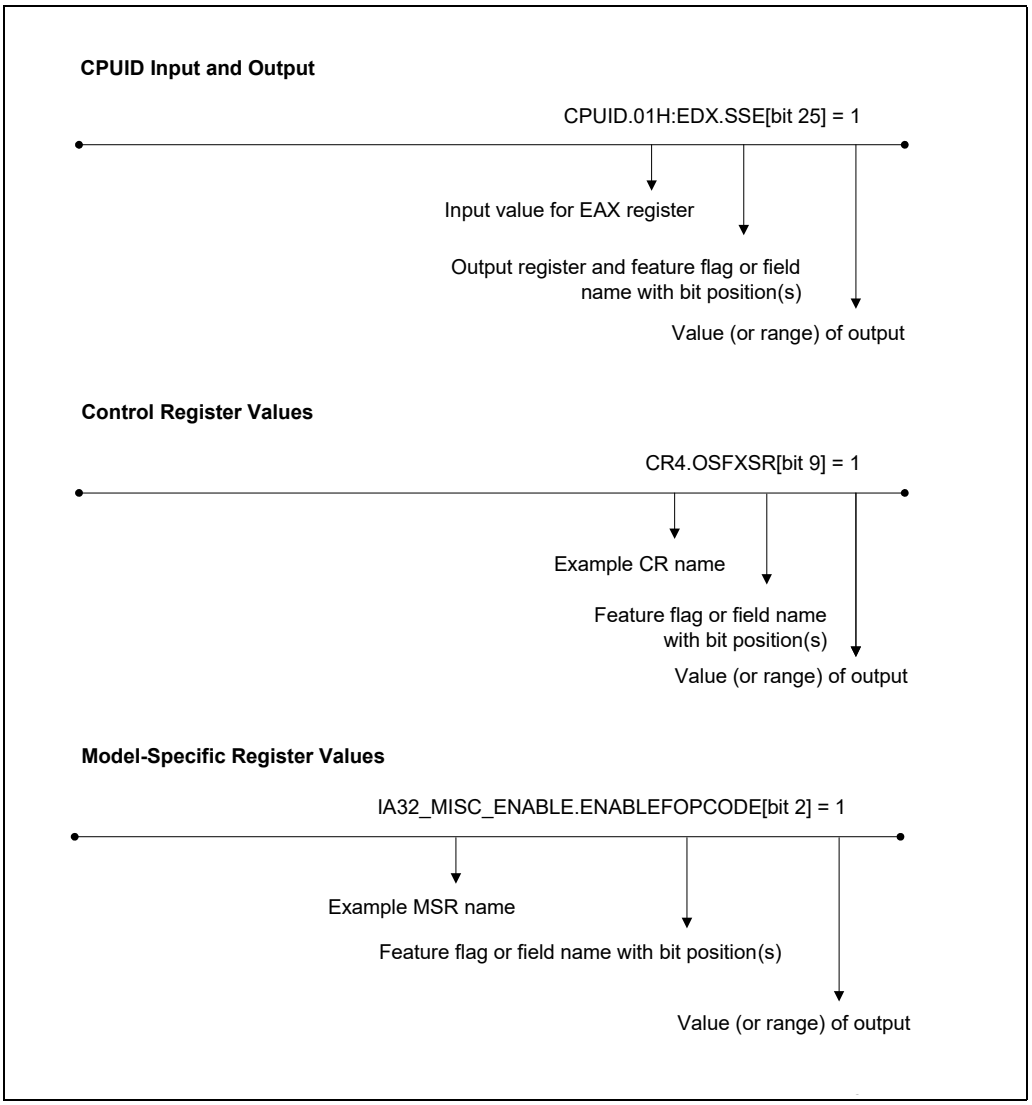

Figure 1-2. Syntax for CPUID, CR, and MSR Data Presentation

1.3.7 Exceptions

An exception is an event that typically occurs when an instruction causes an error. For example, an attempt to divide by zero generates an exception. However, some exceptions, such as breakpoints, occur under other conditions. Some types of exceptions may provide error codes. An error code reports additional information about the error. An example of the notation used to show an exception and error code is shown below:

```
#PF(fault code)
```

This example refers to a page-fault exception under conditions where an error code naming a type of fault is reported. Under some conditions, exceptions which produce error codes may not be able to report an accurate code. In this case, the error code is zero, as shown below for a general-protection exception:

```
#GP(0)
```

1.4 RELATED LITERATURE

Literature related to Intel 64 and IA-32 processors is listed and viewable on-line at:

https://software.intel.com/en-us/articles/intel-sdm

See also:

- The latest security information on Intel® products:
  https://www.intel.com/content/www/us/en/security-center/default.html
- Software developer resources, guidance, and insights for security advisories:
  https://software.intel.com/security-software-guidance/
- The data sheet for a particular Intel 64 or IA-32 processor
- The specification update for a particular Intel 64 or IA-32 processor
- Intel® C++ Compiler documentation and online help:
  http://software.intel.com/en-us/articles/intel-compilers/
- Intel® Fortran Compiler documentation and online help:
  http://software.intel.com/en-us/articles/intel-compilers/
- Intel® Software Development Tools:
  https://software.intel.com/en-us/intel-sdp-home
- Intel® 64 and IA-32 Architectures Software Developer's Manual (in one, four or ten volumes):
  https://software.intel.com/en-us/articles/intel-sdm
- Intel® 64 and IA-32 Architectures Optimization Reference Manual:
  https://software.intel.com/en-us/articles/intel-sdm#optimization
- Intel® Trusted Execution Technology Measured Launched Environment Programming Guide:
  http://www.intel.com/content/www/us/en/software-developers/intel-txt-software-development-guide.html
- Intel® Software Guard Extensions (Intel® SGX) Information
  https://software.intel.com/en-us/isa-extensions/intel-sgx
- Developing Multi-threaded Applications: A Platform Consistent Approach:
  https://software.intel.com/sites/default/files/article/147714/51534-developing-multithreaded-applications.pdf
- Using Spin-Loops on Intel® Pentium® 4 Processor and Intel® Xeon® Processor:
  https://software.intel.com/sites/default/files/22/30/25602
- Performance Monitoring Unit Sharing Guide
  http://software.intel.com/file/30388

Literature related to select features in future Intel processors are available at:

- Intel® Architecture Instruction Set Extensions Programming Reference
  https://software.intel.com/en-us/isa-extensions

More relevant links are:

- Intel® Developer Zone:
  https://software.intel.com/en-us
- Developer centers:
  http://www.intel.com/content/www/us/en/hardware-developers/developer-centers.html
- Processor support general link:
  http://www.intel.com/support/processors/
- Intel® Hyper-Threading Technology (Intel® HT Technology):
  http://www.intel.com/technology/platform-technology/hyper-threading/index.htm

CHAPTER 2
SYSTEM ARCHITECTURE OVERVIEW

IA-32 architecture (beginning with the Intel386 processor family) provides extensive support for operating-system and system-development software. This support offers multiple modes of operation, which include:

- Real mode, protected mode, virtual 8086 mode, and system management mode. These are sometimes referred to as legacy modes.

Intel 64 architecture supports almost all the system programming facilities available in IA-32 architecture and extends them to a new operating mode (IA-32e mode) that supports a 64-bit programming environment. IA-32e mode allows software to operate in one of two sub-modes:

- 64-bit mode supports 64-bit OS and 64-bit applications
- Compatibility mode allows most legacy software to run; it co-exists with 64-bit applications under a 64-bit OS.

The IA-32 system-level architecture includes features to assist in the following operations:

- Memory management
- Protection of software modules
- Multitasking
- Exception and interrupt handling
- Multiprocessing
- Cache management
- Hardware resource and power management
- Debugging and performance monitoring

This chapter provides a description of each part of this architecture. It also describes the system registers that are used to set up and control the processor at the system level and gives a brief overview of the processor's system-level (operating system) instructions.

Many features of the system-level architecture are used only by system programmers. However, application programmers may need to read this chapter and the following chapters in order to create a reliable and secure environment for application programs.

This overview and most subsequent chapters of this book focus on protected-mode operation of the IA-32 architecture. IA-32e mode operation of the Intel 64 architecture, as it differs from protected mode operation, is also described.

All Intel 64 and IA-32 processors enter real-address mode following a power-up or reset (see Chapter 10, "Processor Management and Initialization"). Software then initiates the switch from real-address mode to protected mode. If IA-32e mode operation is desired, software also initiates a switch from protected mode to IA-32e mode.

2.1 OVERVIEW OF THE SYSTEM-LEVEL ARCHITECTURE

System-level architecture consists of a set of registers, data structures, and instructions designed to support basic system-level operations such as memory management, interrupt and exception handling, task management, and control of multiple processors.

Figure 2-1 provides a summary of system registers and data structures that applies to 32-bit modes. System registers and data structures that apply to IA-32e mode are shown in Figure 2-2.

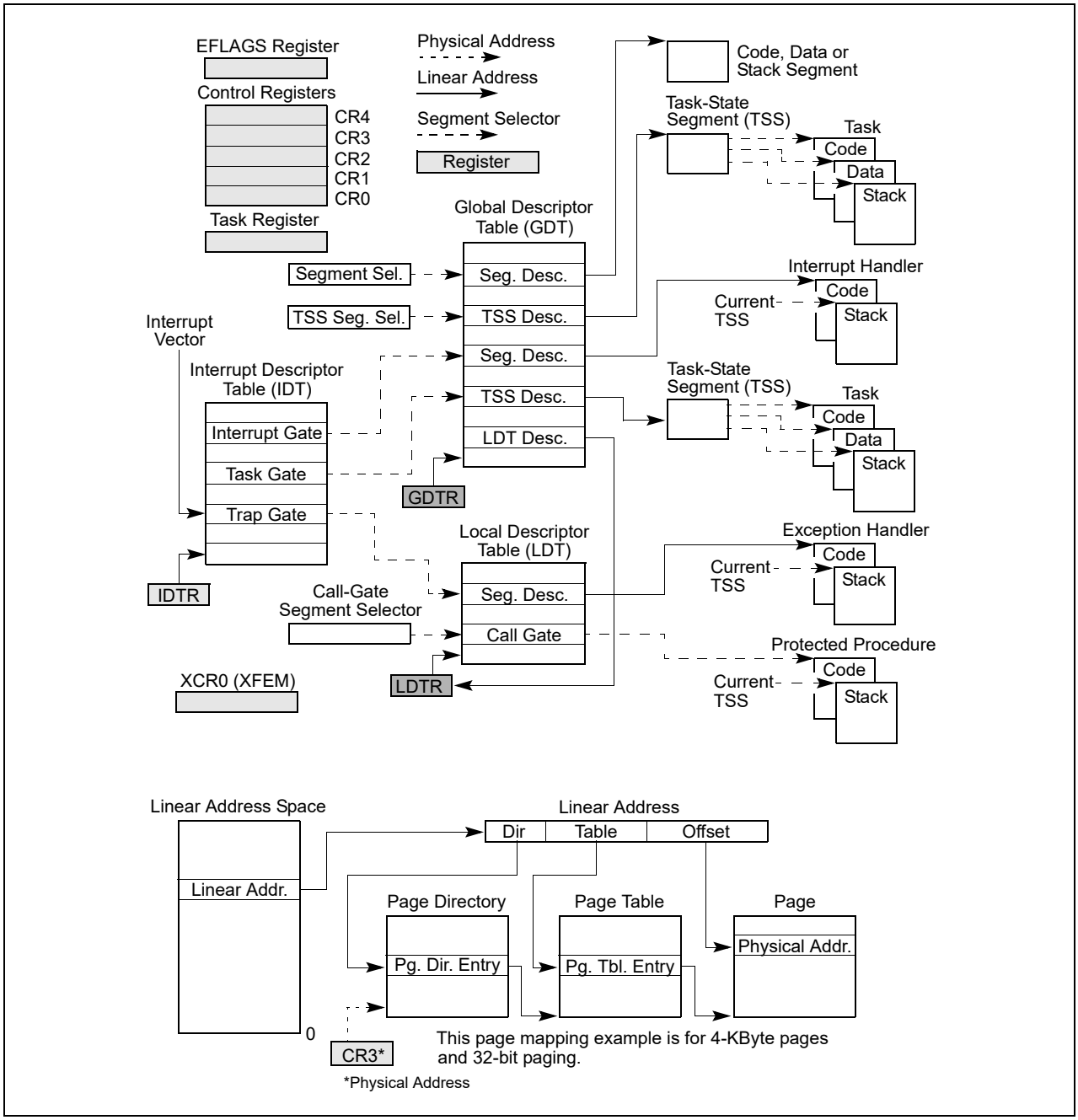

Figure 2-1. IA-32 System-Level Registers and Data Structures

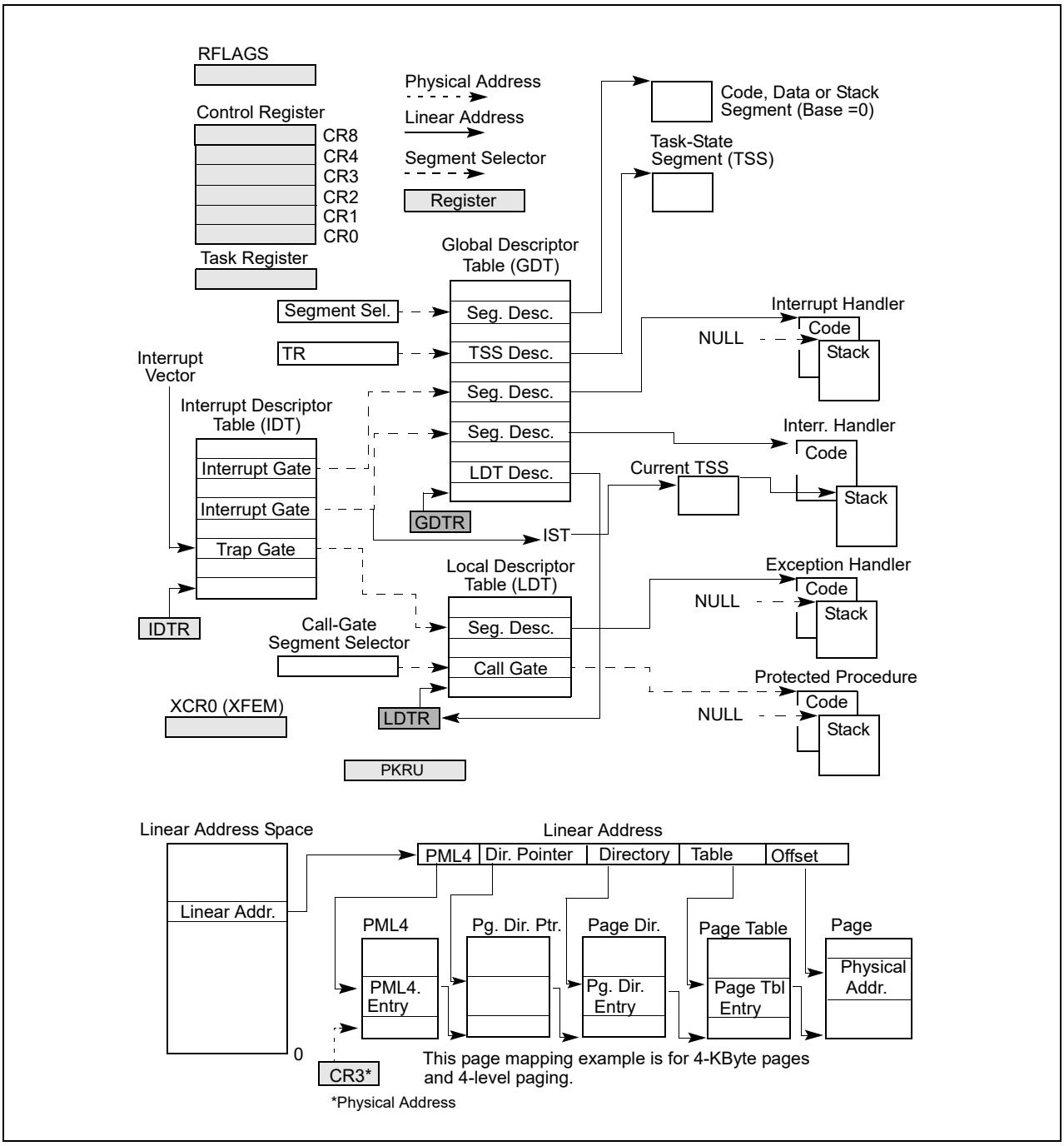

Figure 2-2. System-Level Registers and Data Structures in IA-32e Mode and 4-Level Paging

2.1.1 Global and Local Descriptor Tables

When operating in protected mode, all memory accesses pass through either the global descriptor table (GDT) or an optional local descriptor table (LDT) as shown in Figure 2-1. These tables contain entries called segment descriptors. Segment descriptors provide the base address of segments well as access rights, type, and usage information.

Each segment descriptor has an associated segment selector. A segment selector provides the software that uses it with an index into the GDT or LDT (the offset of its associated segment descriptor), a global/local flag (determines whether the selector points to the GDT or the LDT), and access rights information.

To access a byte in a segment, a segment selector and an offset must be supplied. The segment selector provides access to the segment descriptor for the segment (in the GDT or LDT). From the segment descriptor, the processor obtains the base address of the segment in the linear address space. The offset then provides the location of the byte relative to the base address. This mechanism can be used to access any valid code, data, or stack segment, provided the segment is accessible from the current privilege level (CPL) at which the processor is operating. The CPL is defined as the protection level of the currently executing code segment.

See Figure 2-1. The solid arrows in the figure indicate a linear address, dashed lines indicate a segment selector, and the dotted arrows indicate a physical address. For simplicity, many of the segment selectors are shown as direct pointers to a segment. However, the actual path from a segment selector to its associated segment is always through a GDT or LDT.

The linear address of the base of the GDT is contained in the GDT register (GDTR); the linear address of the LDT is contained in the LDT register (LDTR).

2.1.1.1 Global and Local Descriptor Tables in IA-32e Mode

GDTR and LDTR registers are expanded to 64-bits wide in both IA-32e sub-modes (64-bit mode and compatibility mode). For more information: see Section 3.5.2, "Segment Descriptor Tables in IA-32e Mode."

Global and local descriptor tables are expanded in 64-bit mode to support 64-bit base addresses, (16-byte LDT descriptors hold a 64-bit base address and various attributes). In compatibility mode, descriptors are not expanded.

2.1.2 System Segments, Segment Descriptors, and Gates

Besides code, data, and stack segments that make up the execution environment of a program or procedure, the architecture defines two system segments: the task-state segment (TSS) and the LDT. The GDT is not considered a segment because it is not accessed by means of a segment selector and segment descriptor. TSSs and LDTs have segment descriptors defined for them.

The architecture also defines a set of special descriptors called gates (call gates, interrupt gates, trap gates, and task gates). These provide protected gateways to system procedures and handlers that may operate at a different privilege level than application programs and most procedures. For example, a CALL to a call gate can provide access to a procedure in a code segment that is at the same or a numerically lower privilege level (more privileged) than the current code segment. To access a procedure through a call gate, the calling procedure[1] supplies the selector for the call gate. The processor then performs an access rights check on the call gate, comparing the CPL with the privilege level of the call gate and the destination code segment pointed to by the call gate.

If access to the destination code segment is allowed, the processor gets the segment selector for the destination code segment and an offset into that code segment from the call gate. If the call requires a change in privilege level, the processor also switches to the stack for the targeted privilege level. The segment selector for the new stack is obtained from the TSS for the currently running task. Gates also facilitate transitions between 16-bit and 32-bit code segments, and vice versa.

2.1.2.1 Gates in IA-32e Mode

In IA-32e mode, the following descriptors are 16-byte descriptors (expanded to allow a 64-bit base): LDT descriptors, 64-bit TSSs, call gates, interrupt gates, and trap gates.

Call gates facilitate transitions between 64-bit mode and compatibility mode. Task gates are not supported in IA-32e mode. On privilege level changes, stack segment selectors are not read from the TSS. Instead, they are set to NULL.

1. The word "procedure" is commonly used in this document as a general term for a logical unit or block of code (such as a program, procedure, function, or routine).

2.1.3 Task-State Segments and Task Gates

The TSS (see Figure 2-1) defines the state of the execution environment for a task. It includes the state of general-purpose registers, segment registers, the EFLAGS register, the EIP register, and segment selectors with stack pointers for three stack segments (one stack for each privilege level). The TSS also includes the segment selector for the LDT associated with the task and the base address of the paging-structure hierarchy.

All program execution in protected mode happens within the context of a task (called the current task). The segment selector for the TSS for the current task is stored in the task register. The simplest method for switching to a task is to make a call or jump to the new task. Here, the segment selector for the TSS of the new task is given in the CALL or JMP instruction. In switching tasks, the processor performs the following actions:

1. Stores the state of the current task in the current TSS.
2. Loads the task register with the segment selector for the new task.
3. Accesses the new TSS through a segment descriptor in the GDT.
4. Loads the state of the new task from the new TSS into the general-purpose registers, the segment registers, the LDTR, control register CR3 (base address of the paging-structure hierarchy), the EFLAGS register, and the EIP register.
5. Begins execution of the new task.

A task can also be accessed through a task gate. A task gate is similar to a call gate, except that it provides access (through a segment selector) to a TSS rather than a code segment.

2.1.3.1 Task-State Segments in IA-32e Mode

Hardware task switches are not supported in IA-32e mode. However, TSSs continue to exist. The base address of a TSS is specified by its descriptor.

A 64-bit TSS holds the following information that is important to 64-bit operation:

- Stack pointer addresses for each privilege level
- Pointer addresses for the interrupt stack table
- Offset address of the IO-permission bitmap (from the TSS base)

The task register is expanded to hold 64-bit base addresses in IA-32e mode. See also: Section 8.7, “Task Management in 64-bit Mode.”

2.1.4 Interrupt and Exception Handling

External interrupts, software interrupts and exceptions are handled through the interrupt descriptor table (IDT). The IDT stores a collection of gate descriptors that provide access to interrupt and exception handlers. Like the GDT, the IDT is not a segment. The linear address for the base of the IDT is contained in the IDT register (IDTR).

Gate descriptors in the IDT can be interrupt, trap, or task gate descriptors. To access an interrupt or exception handler, the processor first receives an interrupt vector from internal hardware, an external interrupt controller, or from software by means of an INT *n*, INTO, INT3, INT1, or BOUND instruction. The interrupt vector provides an index into the IDT. If the selected gate descriptor is an interrupt gate or a trap gate, the associated handler procedure is accessed in a manner similar to calling a procedure through a call gate. If the descriptor is a task gate, the handler is accessed through a task switch.

2.1.4.1 Interrupt and Exception Handling IA-32e Mode

In IA-32e mode, interrupt gate descriptors are expanded to 16 bytes to support 64-bit base addresses. This is true for 64-bit mode and compatibility mode.

The IDTR register is expanded to hold a 64-bit base address. Task gates are not supported.

2.1.5 Memory Management

System architecture supports either direct physical addressing of memory or virtual memory (through paging). When physical addressing is used, a linear address is treated as a physical address. When paging is used: all code, data, stack, and system segments (including the GDT and IDT) can be paged with only the most recently accessed pages being held in physical memory.

The location of pages (sometimes called page frames) in physical memory is contained in the paging structures. These structures reside in physical memory (see Figure 2-1 for the case of 32-bit paging).

The base physical address of the paging-structure hierarchy is contained in control register CR3. The entries in the paging structures determine the physical address of the base of a page frame, access rights and memory management information.

To use this paging mechanism, a linear address is broken into parts. The parts provide separate offsets into the paging structures and the page frame. A system can have a single hierarchy of paging structures or several. For example, each task can have its own hierarchy.

2.1.5.1 Memory Management in IA-32e Mode

In IA-32e mode, physical memory pages are managed by a set of system data structures. In both compatibility mode and 64-bit mode, four or five levels of system data structures are used (see Chapter 4, "Paging"). These include the following:

- **The page map level 5 (PML5)** — An entry in the PML5 table contains the physical address of the base of a PML4 table, access rights, and memory management information. The base physical address of the PML5 table is stored in CR3. The PML5 table is used only with 5-level paging.
- **A page map level 4 (PML4)** — An entry in a PML4 table contains the physical address of the base of a page directory pointer table, access rights, and memory management information. With 4-level paging, there is only one PML4 table and its base physical address is stored in CR3.
- **A set of page directory pointer tables** — An entry in a page directory pointer table contains the physical address of the base of a page directory table, access rights, and memory management information.
- **Sets of page directories** — An entry in a page directory table contains the physical address of the base of a page table, access rights, and memory management information.
- **Sets of page tables** — An entry in a page table contains the physical address of a page frame, access rights, and memory management information.

2.1.6 System Registers

To assist in initializing the processor and controlling system operations, the system architecture provides system flags in the EFLAGS register and several system registers:

- The system flags and IOPL field in the EFLAGS register control task and mode switching, interrupt handling, instruction tracing, and access rights. See also: Section 2.3, "System Flags and Fields in the EFLAGS Register."
- The control registers (CR0, CR2, CR3, and CR4) contain a variety of flags and data fields for controlling system-level operations. Other flags in these registers are used to indicate support for specific processor capabilities within the operating system or executive. See also: Chapter 2, "Control Registers," and Section 2.6, "Extended Control Registers (Including XCR0)."
- The debug registers (not shown in Figure 2-1) allow the setting of breakpoints for use in debugging programs and systems software. See also: Chapter 18, "Debug, Branch Profile, TSC, and Intel® Resource Director Technology (Intel® RDT) Features."
- The GDTR, LDTR, and IDTR registers contain the linear addresses and sizes (limits) of their respective tables. See also: Section 2.4, "Memory-Management Registers."
- The task register contains the linear address and size of the TSS for the current task. See also: Section 2.4, "Memory-Management Registers."
- Model-specific registers (not shown in Figure 2-1).

The model-specific registers (MSRs) are a group of registers available primarily to operating-system or executive procedures (that is, code running at privilege level 0). These registers control items such as the debug extensions, the performance-monitoring counters, the machine- check architecture, and the memory type ranges (MTRRs).

The number and function of these registers varies among different members of the Intel 64 and IA-32 processor families. See also: Section 10.4, "Model-Specific Registers (MSRs)," and Chapter 2, "Model-Specific Registers (MSRs)" in the *Intel® 64 and IA-32 Architectures Software Developer's Manual, Volume 4*.

Most systems restrict access to system registers (other than the EFLAGS register) by application programs. Systems can be designed, however, where all programs and procedures run at the most privileged level (privilege level 0). In such a case, application programs would be allowed to modify the system registers.

2.1.6.1 System Registers in IA-32e Mode

In IA-32e mode, the four system-descriptor-table registers (GDTR, IDTR, LDTR, and TR) are expanded in hardware to hold 64-bit base addresses. EFLAGS becomes the 64-bit RFLAGS register. CR0–CR4 are expanded to 64 bits. CR8 becomes available. CR8 provides read-write access to the task priority register (TPR) so that the operating system can control the priority classes of external interrupts.

In 64-bit mode, debug registers DR0–DR7 are 64 bits. In compatibility mode, address-matching in DR0–DR3 is also done at 64-bit granularity.

On systems that support IA-32e mode, the extended feature enable register (IA32_EFER) is available. This model-specific register controls activation of IA-32e mode and other IA-32e mode operations. In addition, there are several model-specific registers that govern IA-32e mode instructions:

- **IA32_KERNEL_GS_BASE** — Used by SWAPGS instruction.
- **IA32_LSTAR** — Used by SYSCALL instruction.
- **IA32_FMASK** — Used by SYSCALL instruction.
- **IA32_STAR** — Used by SYSCALL and SYSRET instruction.

2.1.7 Other System Resources

Besides the system registers and data structures described in the previous sections, system architecture provides the following additional resources:

- Operating system instructions (see also: Section 2.8, "System Instruction Summary").
- Performance-monitoring counters (not shown in Figure 2-1).
- Internal caches and buffers (not shown in Figure 2-1).

Performance-monitoring counters are event counters that can be programmed to count processor events such as the number of instructions decoded, the number of interrupts received, or the number of cache loads.

The processor provides several internal caches and buffers. The caches are used to store both data and instructions. The buffers are used to store things like decoded addresses to system and application segments and write operations waiting to be performed. See also: Chapter 12, "Memory Cache Control."

2.2 MODES OF OPERATION

The IA-32 architecture supports three operating modes and one quasi-operating mode:

- **Protected mode** — This is the native operating mode of the processor. It provides a rich set of architectural features, flexibility, high performance and backward compatibility to existing software base.
- **Real-address mode** — This operating mode provides the programming environment of the Intel 8086 processor, with a few extensions (such as the ability to switch to protected or system management mode).
- **System management mode (SMM)** — SMM is a standard architectural feature in all IA-32 processors, beginning with the Intel386 SL processor. This mode provides an operating system or executive with a transparent mechanism for implementing power management and OEM differentiation features. SMM is entered through activation of an external system interrupt pin (SMI#), which generates a system management

interrupt (SMI). In SMM, the processor switches to a separate address space while saving the context of the currently running program or task. SMM-specific code may then be executed transparently. Upon returning from SMM, the processor is placed back into its state prior to the SMI.

- **Virtual-8086 mode** — In protected mode, the processor supports a quasi-operating mode known as virtual-8086 mode. This mode allows the processor execute 8086 software in a protected, multitasking environment.

Intel 64 architecture supports all operating modes of IA-32 architecture and IA-32e modes:

- **IA-32e mode** — In IA-32e mode, the processor supports two sub-modes: compatibility mode and 64-bit mode. 64-bit mode provides 64-bit linear addressing and support for physical address space larger than 64 GBytes. Compatibility mode allows most legacy protected-mode applications to run unchanged.

Figure 2-3 shows how the processor moves between operating modes.

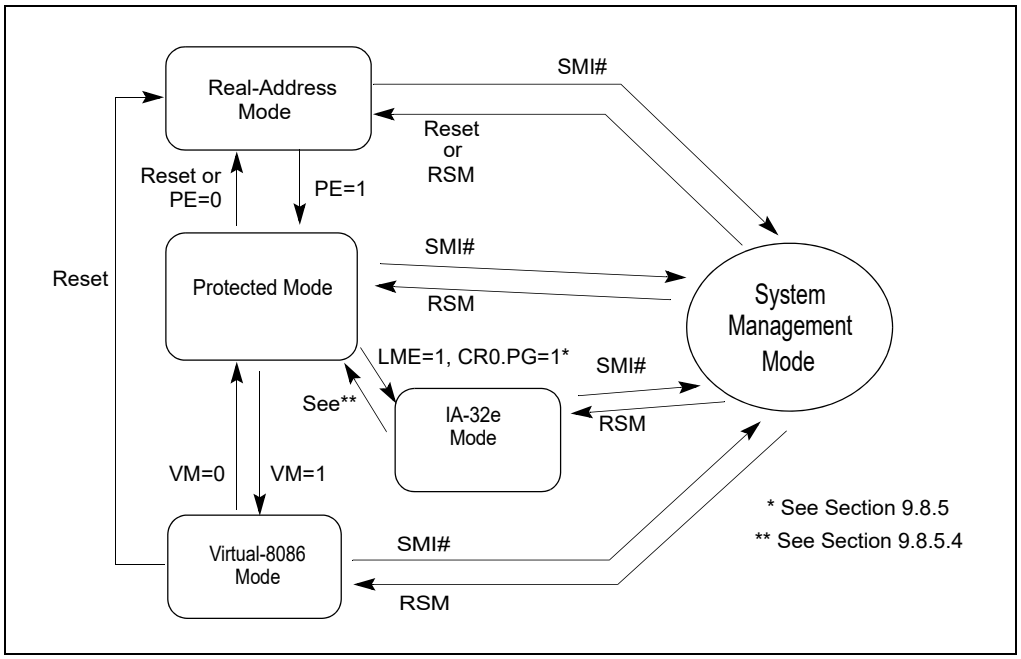

Figure 2-3. Transitions Among the Processor's Operating Modes

The processor is placed in real-address mode following power-up or a reset. The PE flag in control register CR0 then controls whether the processor is operating in real-address or protected mode. See also: Section 10.9, "Mode Switching," and Section 4.1.2, "Paging-Mode Enabling."

The VM flag in the EFLAGS register determines whether the processor is operating in protected mode or virtual-8086 mode. Transitions between protected mode and virtual-8086 mode are generally carried out as part of a task switch or a return from an interrupt or exception handler. See also: Section 21.2.5, "Entering Virtual-8086 Mode."

The LMA bit (IA32_EFER.LMA[bit 10]) determines whether the processor is operating in IA-32e mode. When running in IA-32e mode, 64-bit or compatibility sub-mode operation is determined by CS.L bit of the code segment. The processor enters into IA-32e mode from protected mode by enabling paging and setting the LME bit (IA32_EFER.LME[bit 8]). See also: Chapter 10, "Processor Management and Initialization."

The processor switches to SMM whenever it receives an SMI while the processor is in real-address, protected, virtual-8086, or IA-32e modes. Upon execution of the RSM instruction, the processor always returns to the mode it was in when the SMI occurred.

2.2.1 Extended Feature Enable Register

The IA32_EFER MSR provides several fields related to IA-32e mode enabling and operation. It also provides one field that relates to page-access right modification (see Section 4.6, "Access Rights"). The layout of the IA32_EFER MSR is shown in Figure 2-4.

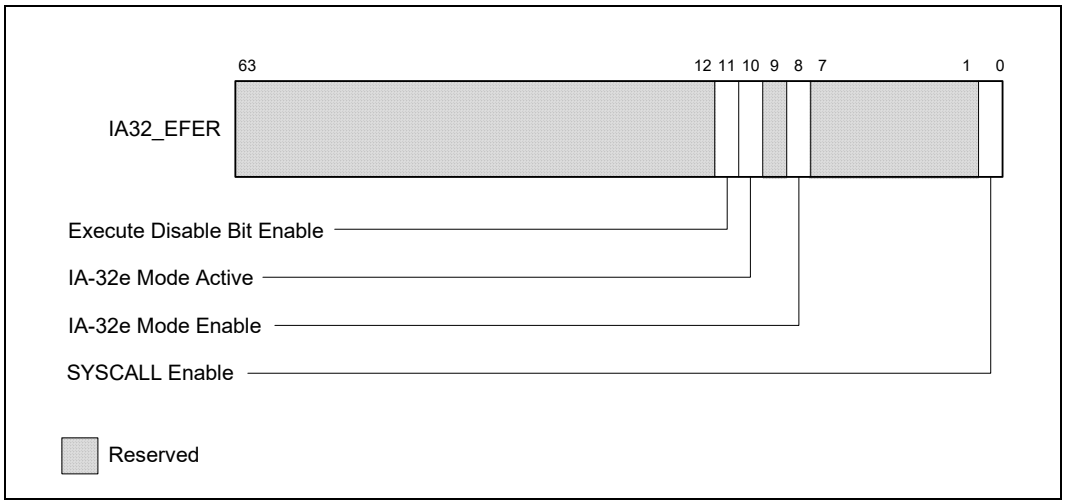

Figure 2-4. IA32_EFER MSR Layout

Table 2-1. IA32_EFER MSR Information

Bit	Description
0	**SYSCALL Enable: IA32_EFER.SCE (R/W)** Enables SYSCALL/SYSRET instructions in 64-bit mode.
7:1	Reserved.
8	**IA-32e Mode Enable: IA32_EFER.LME (R/W)** Enables IA-32e mode operation.
9	Reserved.
10	**IA-32e Mode Active: IA32_EFER.LMA (R)** Indicates IA-32e mode is active when set.
11	**Execute Disable Bit Enable: IA32_EFER.NXE (R/W)** Enables page access restriction by preventing instruction fetches from PAE pages with the XD bit set (See Section 4.6).
63:12	Reserved.

2.3 SYSTEM FLAGS AND FIELDS IN THE EFLAGS REGISTER

The system flags and IOPL field of the EFLAGS register control I/O, maskable hardware interrupts, debugging, task switching, and the virtual-8086 mode (see Figure 2-5). Only privileged code (typically operating system or executive code) should be allowed to modify these bits.

The system flags and IOPL are:

TF **Trap (bit 8)** — Set to enable single-step mode for debugging; clear to disable single-step mode. In single-step mode, the processor generates a debug exception after each instruction. This allows the execution state of a program to be inspected after each instruction. If an application program sets the TF flag using a

POPF, POPFD, or IRET instruction, a debug exception is generated after the instruction that follows the POPF, POPFD, or IRET.

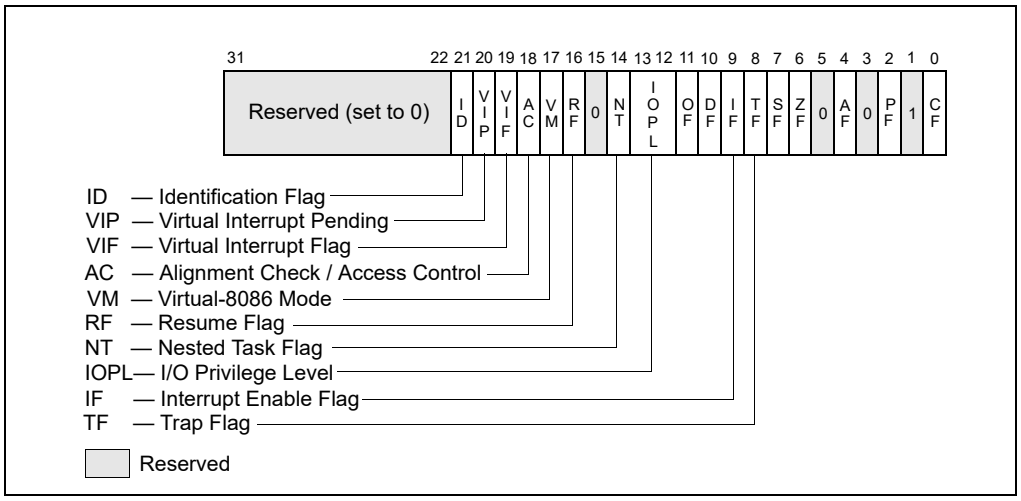

Figure 2-5. System Flags in the EFLAGS Register

IF **Interrupt enable (bit 9)** — Controls the response of the processor to maskable hardware interrupt requests (see also: Section 6.3.2, "Maskable Hardware Interrupts"). The flag is set to respond to maskable hardware interrupts; cleared to inhibit maskable hardware interrupts. The IF flag does not affect the generation of exceptions or nonmaskable interrupts (NMI interrupts). The CPL, IOPL, and the state of the VME flag in control register CR4 determine whether the IF flag can be modified by the CLI, STI, POPF, POPFD, and IRET.

IOPL **I/O privilege level field (bits 12 and 13)** — Indicates the I/O privilege level (IOPL) of the currently running program or task. The CPL of the currently running program or task must be less than or equal to the IOPL to access the I/O address space. The POPF and IRET instructions can modify this field only when operating at a CPL of 0.

The IOPL is also one of the mechanisms that controls the modification of the IF flag and the handling of interrupts in virtual-8086 mode when virtual mode extensions are in effect (when CR4.VME = 1). See also: Chapter 19, "Input/Output," in the *Intel® 64 and IA-32 Architectures Software Developer's Manual, Volume 1*.

NT **Nested task (bit 14)** — Controls the chaining of interrupted and called tasks. The processor sets this flag on calls to a task initiated with a CALL instruction, an interrupt, or an exception. It examines and modifies this flag on returns from a task initiated with the IRET instruction. The flag can be explicitly set or cleared with the POPF/POPFD instructions; however, changing to the state of this flag can generate unexpected exceptions in application programs.

See also: Section 8.4, "Task Linking."

RF **Resume (bit 16)** — Controls the processor's response to instruction-breakpoint conditions. When set, this flag temporarily disables debug exceptions (#DB) from being generated for instruction breakpoints (although other exception conditions can cause an exception to be generated). When clear, instruction breakpoints will generate debug exceptions.

The primary function of the RF flag is to allow the restarting of an instruction following a debug exception that was caused by an instruction breakpoint condition. Here, debug software must set this flag in the EFLAGS image on the stack just prior to returning to the interrupted program with IRETD (to prevent the instruction breakpoint from causing another debug exception). The processor then automatically clears this flag after the instruction returned to has been successfully executed, enabling instruction breakpoint faults again.

See also: Section 18.3.1.1, "Instruction-Breakpoint Exception Condition."

VM **Virtual-8086 mode (bit 17)** — Set to enable virtual-8086 mode; clear to return to protected mode.

See also: Section 21.2.1, "Enabling Virtual-8086 Mode."

AC **Alignment check or access control (bit 18)** — If the AM bit is set in the CR0 register, alignment checking of user-mode data accesses is enabled if and only if this flag is 1. An alignment-check exception is generated when reference is made to an unaligned operand, such as a word at an odd byte address or a doubleword at an address which is not an integral multiple of four. Alignment-check exceptions are generated only in user mode (privilege level 3). Memory references that default to privilege level 0, such as segment descriptor loads, do not generate this exception even when caused by instructions executed in user-mode.

The alignment-check exception can be used to check alignment of data. This is useful when exchanging data with processors which require all data to be aligned. The alignment-check exception can also be used by interpreters to flag some pointers as special by misaligning the pointer. This eliminates overhead of checking each pointer and only handles the special pointer when used.

If the SMAP bit is set in the CR4 register, explicit supervisor-mode data accesses to user-mode pages are allowed if and only if this bit is 1. See Section 4.6, "Access Rights."

VIF **Virtual Interrupt (bit 19)** — Contains a virtual image of the IF flag. This flag is used in conjunction with the VIP flag. The processor only recognizes the VIF flag when either the VME flag or the PVI flag in control register CR4 is set and the IOPL is less than 3. (The VME flag enables the virtual-8086 mode extensions; the PVI flag enables the protected-mode virtual interrupts.)

See also: Section 21.3.3.5, "Method 6: Software Interrupt Handling," and Section 21.4, "Protected-Mode Virtual Interrupts."

VIP **Virtual interrupt pending (bit 20)** — Set by software to indicate that an interrupt is pending; cleared to indicate that no interrupt is pending. This flag is used in conjunction with the VIF flag. The processor reads this flag but never modifies it. The processor only recognizes the VIP flag when either the VME flag or the PVI flag in control register CR4 is set and the IOPL is less than 3. The VME flag enables the virtual-8086 mode extensions; the PVI flag enables the protected-mode virtual interrupts.

See Section 21.3.3.5, "Method 6: Software Interrupt Handling," and Section 21.4, "Protected-Mode Virtual Interrupts."

ID **Identification (bit 21)** — The ability of a program or procedure to set or clear this flag indicates support for the CPUID instruction.

2.3.1 System Flags and Fields in IA-32e Mode

In 64-bit mode, the RFLAGS register expands to 64 bits with the upper 32 bits reserved. System flags in RFLAGS (64-bit mode) or EFLAGS (compatibility mode) are shown in Figure 2-5.

In IA-32e mode, the processor does not allow the VM bit to be set because virtual-8086 mode is not supported (attempts to set the bit are ignored). Also, the processor will not set the NT bit. The processor does, however, allow software to set the NT bit (note that an IRET causes a general protection fault in IA-32e mode if the NT bit is set).

In IA-32e mode, the SYSCALL/SYSRET instructions have a programmable method of specifying which bits are cleared in RFLAGS/EFLAGS. These instructions save/restore EFLAGS/RFLAGS.

2.4 MEMORY-MANAGEMENT REGISTERS

The processor provides four memory-management registers (GDTR, LDTR, IDTR, and TR) that specify the locations of the data structures which control segmented memory management (see Figure 2-6). Special instructions are provided for loading and storing these registers.

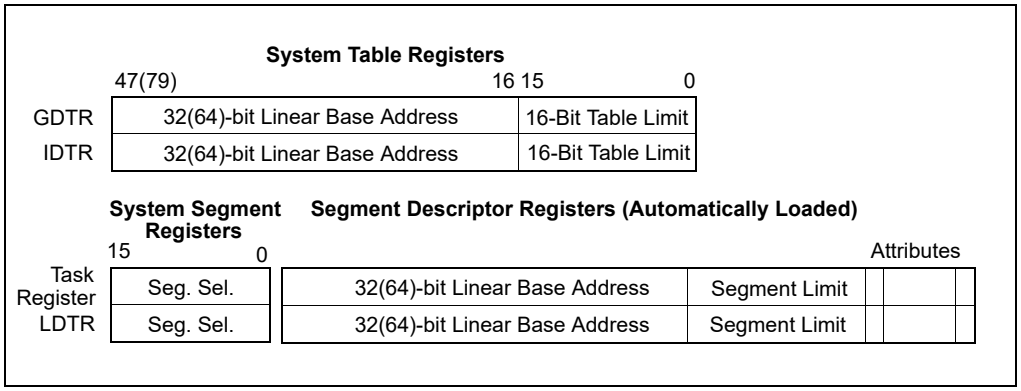

Figure 2-6. Memory Management Registers

2.4.1 Global Descriptor Table Register (GDTR)

The GDTR register holds the base address (32 bits in protected mode; 64 bits in IA-32e mode) and the 16-bit table limit for the GDT. The base address specifies the linear address of byte 0 of the GDT; the table limit specifies the number of bytes in the table.

The LGDT and SGDT instructions load and store the GDTR register, respectively. On power up or reset of the processor, the base address is set to the default value of 0 and the limit is set to 0FFFFH. A new base address must be loaded into the GDTR as part of the processor initialization process for protected-mode operation.

See also: Section 3.5.1, "Segment Descriptor Tables."

2.4.2 Local Descriptor Table Register (LDTR)

The LDTR register holds the 16-bit segment selector, base address (32 bits in protected mode; 64 bits in IA-32e mode), segment limit, and descriptor attributes for the LDT. The base address specifies the linear address of byte 0 of the LDT segment; the segment limit specifies the number of bytes in the segment. See also: Section 3.5.1, "Segment Descriptor Tables."

The LLDT and SLDT instructions load and store the segment selector part of the LDTR register, respectively. The segment that contains the LDT must have a segment descriptor in the GDT. When the LLDT instruction loads a segment selector in the LDTR: the base address, limit, and descriptor attributes from the LDT descriptor are automatically loaded in the LDTR.

When a task switch occurs, the LDTR is automatically loaded with the segment selector and descriptor for the LDT for the new task. The contents of the LDTR are not automatically saved prior to writing the new LDT information into the register.

On power up or reset of the processor, the segment selector and base address are set to the default value of 0 and the limit is set to 0FFFFH.

2.4.3 IDTR Interrupt Descriptor Table Register

The IDTR register holds the base address (32 bits in protected mode; 64 bits in IA-32e mode) and 16-bit table limit for the IDT. The base address specifies the linear address of byte 0 of the IDT; the table limit specifies the number of bytes in the table. The LIDT and SIDT instructions load and store the IDTR register, respectively. On power up or reset of the processor, the base address is set to the default value of 0 and the limit is set to 0FFFFH. The base address and limit in the register can then be changed as part of the processor initialization process.

See also: Section 6.10, "Interrupt Descriptor Table (IDT)."

2.4.4 Task Register (TR)

The task register holds the 16-bit segment selector, base address (32 bits in protected mode; 64 bits in IA-32e mode), segment limit, and descriptor attributes for the TSS of the current task. The selector references the TSS descriptor in the GDT. The base address specifies the linear address of byte 0 of the TSS; the segment limit specifies the number of bytes in the TSS. See also: Section 8.2.4, "Task Register."

The LTR and STR instructions load and store the segment selector part of the task register, respectively. When the LTR instruction loads a segment selector in the task register, the base address, limit, and descriptor attributes from the TSS descriptor are automatically loaded into the task register. On power up or reset of the processor, the base address is set to the default value of 0 and the limit is set to 0FFFFH.

When a task switch occurs, the task register is automatically loaded with the segment selector and descriptor for the TSS for the new task. The contents of the task register are not automatically saved prior to writing the new TSS information into the register.

2.5 CONTROL REGISTERS

Control registers (CR0, CR1, CR2, CR3, and CR4; see Figure 2-7) determine operating mode of the processor and the characteristics of the currently executing task. These registers are 32 bits in all 32-bit modes and compatibility mode.

In 64-bit mode, control registers are expanded to 64 bits. The MOV CRn instructions are used to manipulate the register bits. Operand-size prefixes for these instructions are ignored. The following is also true:

- The control registers can be read and loaded (or modified) using the move-to-or-from-control-registers forms of the MOV instruction. In protected mode, the MOV instructions allow the control registers to be read or loaded (at privilege level 0 only). This restriction means that application programs or operating-system procedures (running at privilege levels 1, 2, or 3) are prevented from reading or loading the control registers.
- Some of the bits in CR0 and CR4 are reserved and must be written with zeros. Attempting to set any reserved bits in CR0[31:0] is ignored. Attempting to set any reserved bits in CR0[63:32] results in a general-protection exception, #GP(0). Attempting to set any reserved bits in CR4 results in a general-protection exception, #GP(0).
- All 64 bits of CR2 are writable by software.
- Reserved bits in CR3[63:MAXPHYADDR] must be zero. Attempting to set any of them results in #GP(0).
- The MOV CR2 instruction does not check that address written to CR2 is canonical.
- A 64-bit capable processor will retain the upper 32 bits of each control register when transitioning out of IA-32e mode.
- On a 64-bit capable processor, an execution of MOV to CR outside of 64-bit mode zeros the upper 32 bits of the control register.
- Register CR8 is available in 64-bit mode only.

The control registers are summarized below, and each architecturally defined control field in these control registers is described individually. In Figure 2-7, the width of the register in 64-bit mode is indicated in parenthesis (except for CR0).

- **CR0** — Contains system control flags that control operating mode and states of the processor.
- **CR1** — Reserved.
- **CR2** — Contains the page-fault linear address (the linear address that caused a page fault).
- **CR3** — Contains the physical address of the base of the paging-structure hierarchy and two flags (PCD and PWT). Only the most-significant bits (less the lower 12 bits) of the base address are specified; the lower 12 bits of the address are assumed to be 0. The first paging structure must thus be aligned to a page (4-KByte) boundary. The PCD and PWT flags control caching of that paging structure in the processor's internal data caches (they do not control TLB caching of page-directory information).

  When using the physical address extension, the CR3 register contains the base address of the page-directory-pointer table. With 4-level paging and 5-level paging, the CR3 register contains the base address of the PML4

table and PML5 table, respectively. If PCIDs are enabled, CR3 has a format different from that illustrated in Figure 2-7. See Section 4.5, "4-Level Paging and 5-Level Paging."

See also: Chapter 4, "Paging."

- **CR4** — Contains a group of flags that enable several architectural extensions, and indicate operating system or executive support for specific processor capabilities. Bits CR4[63:32] can only be used for IA-32e mode only features that are enabled after entering 64-bit mode. Bits CR4[63:32] do not have any effect outside of IA-32e mode.
- **CR8** — Provides read and write access to the Task Priority Register (TPR). It specifies the priority threshold value that operating systems use to control the priority class of external interrupts allowed to interrupt the processor. This register is available only in 64-bit mode. However, interrupt filtering continues to apply in compatibility mode.

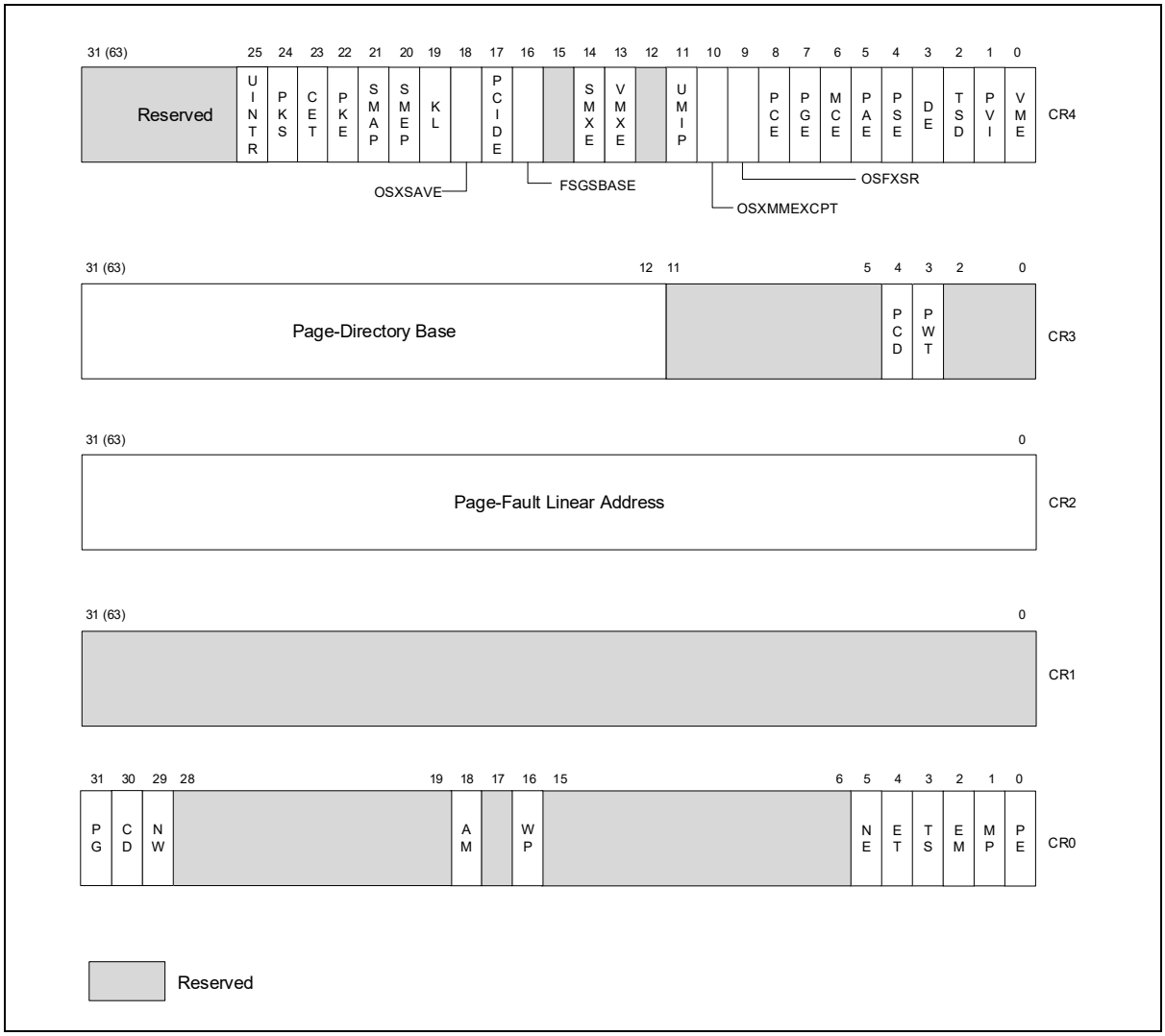

Figure 2-7. Control Registers

The flags in control registers are:

CR0.PG

Paging (bit 31 of CR0) — Enables paging when set; disables paging when clear. When paging is disabled, all linear addresses are treated as physical addresses. The PG flag has no effect if the PE flag (bit 0 of register CR0) is not also set; setting the PG flag when the PE flag is clear causes a general-protection exception (#GP). See also: Chapter 4, "Paging."

On Intel 64 processors, enabling and disabling IA-32e mode operation also requires modifying CR0.PG.

CR0.CD

Cache Disable (bit 30 of CR0) — When the CD and NW flags are clear, caching of memory locations for the whole of physical memory in the processor's internal (and external) caches is enabled. When the CD flag is set, caching is restricted as described in Table 12-5. To prevent the processor from accessing and updating its caches, the CD flag must be set and the caches must be invalidated so that no cache hits can occur.

See also: Section 12.5.3, "Preventing Caching," and Section 12.5, "Cache Control."

CR0.NW

Not Write-through (bit 29 of CR0) — When the NW and CD flags are clear, write-back (for Pentium 4, Intel Xeon, P6 family, and Pentium processors) or write-through (for Intel486 processors) is enabled for writes that hit the cache and invalidation cycles are enabled. See Table 12-5 for detailed information about the effect of the NW flag on caching for other settings of the CD and NW flags.

CR0.AM

Alignment Mask (bit 18 of CR0) — Enables automatic alignment checking when set; disables alignment checking when clear. Alignment checking is performed only when the AM flag is set, the AC flag in the EFLAGS register is set, CPL is 3, and the processor is operating in either protected or virtual-8086 mode.

CR0.WP

Write Protect (bit 16 of CR0) — When set, inhibits supervisor-level procedures from writing into read-only pages; when clear, allows supervisor-level procedures to write into read-only pages (regardless of the U/S bit setting; see Section 4.1.3 and Section 4.6). This flag facilitates implementation of the copy-on-write method of creating a new process (forking) used by operating systems such as UNIX. This flag must be set before software can set CR4.CET, and it cannot be cleared as long as CR4.CET = 1 (see below).

CR0.NE

Numeric Error (bit 5 of CR0) — Enables the native (internal) mechanism for reporting x87 FPU errors when set; enables the PC-style x87 FPU error reporting mechanism when clear. When the NE flag is clear and the IGNNE# input is asserted, x87 FPU errors are ignored. When the NE flag is clear and the IGNNE# input is deasserted, an unmasked x87 FPU error causes the processor to assert the FERR# pin to generate an external interrupt and to stop instruction execution immediately before executing the next waiting floating-point instruction or WAIT/FWAIT instruction.

The FERR# pin is intended to drive an input to an external interrupt controller (the FERR# pin emulates the ERROR# pin of the Intel 287 and Intel 387 DX math coprocessors). The NE flag, IGNNE# pin, and FERR# pin are used with external logic to implement PC-style error reporting. Using FERR# and IGNNE# to handle floating-point exceptions is deprecated by modern operating systems; this non-native approach also limits newer processors to operate with one logical processor active.

See also: Section 8.7, "Handling x87 FPU Exceptions in Software," in Chapter 8, "Programming with the x87 FPU," and Appendix A, "EFLAGS Cross-Reference," in the *Intel® 64 and IA-32 Architectures Software Developer's Manual, Volume 1*.

CR0.ET

Extension Type (bit 4 of CR0) — Reserved in the Pentium 4, Intel Xeon, P6 family, and Pentium processors. In the Pentium 4, Intel Xeon, and P6 family processors, this flag is hardcoded to 1. In the Intel386 and Intel486 processors, this flag indicates support of Intel 387 DX math coprocessor instructions when set.

CR0.TS

Task Switched (bit 3 of CR0) — Allows the saving of the x87 FPU/MMX/SSE/SSE2/SSE3/SSSE3/SSE4 context on a task switch to be delayed until an x87 FPU/MMX/SSE/SSE2/SSE3/SSSE3/SSE4 instruction is

actually executed by the new task. The processor sets this flag on every task switch and tests it when executing x87 FPU/MMX/SSE/SSE2/SSE3/SSSE3/SSE4 instructions.

- If the TS flag is set and the EM flag (bit 2 of CR0) is clear, a device-not-available exception (#NM) is raised prior to the execution of any x87 FPU/MMX/SSE/SSE2/SSE3/SSSE3/SSE4 instruction; with the exception of PAUSE, PREFETCH*h*, SFENCE, LFENCE, MFENCE, MOVNTI, CLFLUSH, CRC32, and POPCNT. See the paragraph below for the special case of the WAIT/FWAIT instructions.
- If the TS flag is set and the MP flag (bit 1 of CR0) and EM flag are clear, an #NM exception is not raised prior to the execution of an x87 FPU WAIT/FWAIT instruction.
- If the EM flag is set, the setting of the TS flag has no effect on the execution of x87 FPU/MMX/SSE/SSE2/SSE3/SSSE3/SSE4 instructions.

Table 2-2 shows the actions taken when the processor encounters an x87 FPU instruction based on the settings of the TS, EM, and MP flags. Table 13-1 and 14-1 show the actions taken when the processor encounters an MMX/SSE/SSE2/SSE3/SSSE3/SSE4 instruction.

The processor does not automatically save the context of the x87 FPU, XMM, and MXCSR registers on a task switch. Instead, it sets the TS flag, which causes the processor to raise an #NM exception whenever it encounters an x87 FPU/MMX/SSE/SSE2/SSE3/SSSE3/SSE4 instruction in the instruction stream for the new task (with the exception of the instructions listed above).

The fault handler for the #NM exception can then be used to clear the TS flag (with the CLTS instruction) and save the context of the x87 FPU, XMM, and MXCSR registers. If the task never encounters an x87 FPU/MMX/SSE/SSE2/SSE3/SSSE3/SSE4 instruction, the x87 FPU/MMX/SSE/SSE2/SSE3/SSSE3/SSE4 context is never saved.

Table 2-2. Action Taken By x87 FPU Instructions for Different Combinations of EM, MP, and TS

CR0 Flags			x87 FPU Instruction Type	
EM	MP	TS	Floating-Point	WAIT/FWAIT
0	0	0	Execute	Execute.
0	0	1	#NM Exception	Execute.
0	1	0	Execute	Execute.
0	1	1	#NM Exception	#NM exception.
1	0	0	#NM Exception	Execute.
1	0	1	#NM Exception	Execute.
1	1	0	#NM Exception	Execute.
1	1	1	#NM Exception	#NM exception.

CR0.EM

Emulation (bit 2 of CR0) — Indicates that the processor does not have an internal or external x87 FPU when set; indicates an x87 FPU is present when clear. This flag also affects the execution of MMX/SSE/SSE2/SSE3/SSSE3/SSE4 instructions.

When the EM flag is set, execution of an x87 FPU instruction generates a device-not-available exception (#NM). This flag must be set when the processor does not have an internal x87 FPU or is not connected to an external math coprocessor. Setting this flag forces all floating-point instructions to be handled by software emulation. Table 10-3 shows the recommended setting of this flag, depending on the IA-32 processor and x87 FPU or math coprocessor present in the system. Table 2-2 shows the interaction of the EM, MP, and TS flags.

Also, when the EM flag is set, execution of an MMX instruction causes an invalid-opcode exception (#UD) to be generated (see Table 13-1). Thus, if an IA-32 or Intel 64 processor incorporates MMX technology, the EM flag must be set to 0 to enable execution of MMX instructions.

Similarly for SSE/SSE2/SSE3/SSSE3/SSE4 extensions, when the EM flag is set, execution of most SSE/SSE2/SSE3/SSSE3/SSE4 instructions causes an invalid opcode exception (#UD) to be generated (see

Table 14-1). If an IA-32 or Intel 64 processor incorporates the SSE/SSE2/SSE3/SSSE3/SSE4 extensions, the EM flag must be set to 0 to enable execution of these extensions. SSE/SSE2/SSE3/SSSE3/SSE4 instructions not affected by the EM flag include: PAUSE, PREFETCH*h*, SFENCE, LFENCE, MFENCE, MOVNTI, CLFLUSH, CRC32, and POPCNT.

CR0.MP

Monitor Coprocessor (bit 1 of CR0) — Controls the interaction of the WAIT (or FWAIT) instruction with the TS flag (bit 3 of CR0). If the MP flag is set, a WAIT instruction generates a device-not-available exception (#NM) if the TS flag is also set. If the MP flag is clear, the WAIT instruction ignores the setting of the TS flag. Table 10-3 shows the recommended setting of this flag, depending on the IA-32 processor and x87 FPU or math coprocessor present in the system. Table 2-2 shows the interaction of the MP, EM, and TS flags.

CR0.PE

Protection Enable (bit 0 of CR0) — Enables protected mode when set; enables real-address mode when clear. This flag does not enable paging directly. It only enables segment-level protection. To enable paging, both the PE and PG flags must be set.

See also: Section 10.9, "Mode Switching."

CR3.PCD

Page-level Cache Disable (bit 4 of CR3) — Controls the memory type used to access the first paging structure of the current paging-structure hierarchy. See Section 4.9, "Paging and Memory Typing." This bit is not used if paging is disabled, with PAE paging, or with 4-level paging[1] or 5-level paging if CR4.PCIDE=1.

CR3.PWT

Page-level Write-Through (bit 3 of CR3) — Controls the memory type used to access the first paging structure of the current paging-structure hierarchy. See Section 4.9, "Paging and Memory Typing." This bit is not used if paging is disabled, with PAE paging, or with 4-level paging or 5-level paging if CR4.PCIDE=1.

CR4.VME

Virtual-8086 Mode Extensions (bit 0 of CR4) — Enables interrupt- and exception-handling extensions in virtual-8086 mode when set; disables the extensions when clear. Use of the virtual mode extensions can improve the performance of virtual-8086 applications by eliminating the overhead of calling the virtual-8086 monitor to handle interrupts and exceptions that occur while executing an 8086 program and, instead, redirecting the interrupts and exceptions back to the 8086 program's handlers. It also provides hardware support for a virtual interrupt flag (VIF) to improve reliability of running 8086 programs in multi-tasking and multiple-processor environments.

See also: Section 21.3, "Interrupt and Exception Handling in Virtual-8086 Mode."

CR4.PVI

Protected-Mode Virtual Interrupts (bit 1 of CR4) — Enables hardware support for a virtual interrupt flag (VIF) in protected mode when set; disables the VIF flag in protected mode when clear.

See also: Section 21.4, "Protected-Mode Virtual Interrupts."

CR4.TSD

Time Stamp Disable (bit 2 of CR4) — Restricts the execution of the RDTSC instruction to procedures running at privilege level 0 when set; allows RDTSC instruction to be executed at any privilege level when clear. This bit also applies to the RDTSCP instruction if supported (if CPUID.80000001H:EDX[27] = 1).

CR4.DE

Debugging Extensions (bit 3 of CR4) — References to debug registers DR4 and DR5 cause an undefined opcode (#UD) exception to be generated when set; when clear, processor aliases references to registers DR4 and DR5 for compatibility with software written to run on earlier IA-32 processors.

See also: Section 18.2.2, "Debug Registers DR4 and DR5."

CR4.PSE

Page Size Extensions (bit 4 of CR4) — Enables 4-MByte pages with 32-bit paging when set; restricts 32-bit paging to pages of 4 KBytes when clear.

See also: Section 4.3, "32-Bit Paging."

1. Earlier versions of this manual used the term "IA-32e paging" to identify 4-level paging.

CR4.PAE

Physical Address Extension (bit 5 of CR4) — When set, enables paging to produce physical addresses with more than 32 bits. When clear, restricts physical addresses to 32 bits. PAE must be set before entering IA-32e mode.

See also: Chapter 4, "Paging."

CR4.MCE

Machine-Check Enable (bit 6 of CR4) — Enables the machine-check exception when set; disables the machine-check exception when clear.

See also: Chapter 16, "Machine-Check Architecture."

CR4.PGE

Page Global Enable (bit 7 of CR4) — (Introduced in the P6 family processors.) Enables the global page feature when set; disables the global page feature when clear. The global page feature allows frequently used or shared pages to be marked as global to all users (done with the global flag, bit 8, in a page-directory-pointer-table entry, a page-directory entry, or a page-table entry). Global pages are not flushed from the translation-lookaside buffer (TLB) on a task switch or a write to register CR3.

When enabling the global page feature, paging must be enabled (by setting the PG flag in control register CR0) before the PGE flag is set. Reversing this sequence may affect program correctness, and processor performance will be impacted.

See also: Section 4.10, "Caching Translation Information."

CR4.PCE

Performance-Monitoring Counter Enable (bit 8 of CR4) — Enables execution of the RDPMC instruction for programs or procedures running at any protection level when set; RDPMC instruction can be executed only at protection level 0 when clear.

CR4.OSFXSR

Operating System Support for FXSAVE and FXRSTOR instructions (bit 9 of CR4) — When set, this flag: (1) indicates to software that the operating system supports the use of the FXSAVE and FXRSTOR instructions, (2) enables the FXSAVE and FXRSTOR instructions to save and restore the contents of the XMM and MXCSR registers along with the contents of the x87 FPU and MMX registers, and (3) enables the processor to execute SSE/SSE2/SSE3/SSSE3/SSE4 instructions, with the exception of the PAUSE, PREFETCH*h*, SFENCE, LFENCE, MFENCE, MOVNTI, CLFLUSH, CRC32, and POPCNT.

If this flag is clear, the FXSAVE and FXRSTOR instructions will save and restore the contents of the x87 FPU and MMX registers, but they may not save and restore the contents of the XMM and MXCSR registers. Also, the processor will generate an invalid opcode exception (#UD) if it attempts to execute any SSE/SSE2/SSE3 instruction, with the exception of PAUSE, PREFETCH*h*, SFENCE, LFENCE, MFENCE, MOVNTI, CLFLUSH, CRC32, and POPCNT. The operating system or executive must explicitly set this flag.

NOTE

CPUID feature flag FXSR indicates availability of the FXSAVE/FXRSTOR instructions. The OSFXSR bit provides operating system software with a means of enabling FXSAVE/FXRSTOR to save/restore the contents of the X87 FPU, XMM, and MXCSR registers. Consequently OSFXSR bit indicates that the operating system provides context switch support for SSE/SSE2/SSE3/SSSE3/SSE4.

CR4.OSXMMEXCPT

Operating System Support for Unmasked SIMD Floating-Point Exceptions (bit 10 of CR4) — When set, indicates that the operating system supports the handling of unmasked SIMD floating-point exceptions through an exception handler that is invoked when a SIMD floating-point exception (#XM) is generated. SIMD floating-point exceptions are only generated by SSE/SSE2/SSE3/SSE4.1 SIMD floating-point instructions.

The operating system or executive must explicitly set this flag. If this flag is not set, the processor will generate an invalid opcode exception (#UD) whenever it detects an unmasked SIMD floating-point exception.

CR4.UMIP

User-Mode Instruction Prevention (bit 11 of CR4) — When set, the following instructions cannot be executed if CPL > 0: SGDT, SIDT, SLDT, SMSW, and STR. An attempt at such execution causes a general-protection exception (#GP).

CR4.LA57

57-bit linear addresses (bit 12 of CR4) — When set in IA-32e mode, the processor uses 5-level paging to translate 57-bit linear addresses. When clear in IA-32e mode, the processor uses 4-level paging to translate 48-bit linear addresses. This bit cannot be modified in IA-32e mode.

See also: Chapter 4, "Paging."

CR4.VMXE

VMX-Enable Bit (bit 13 of CR4) — Enables VMX operation when set. See Chapter 24, "Introduction to Virtual Machine Extensions."

CR4.SMXE

SMX-Enable Bit (bit 14 of CR4) — Enables SMX operation when set. See Chapter 7, "Safer Mode Extensions Reference" of *Intel® 64 and IA-32 Architectures Software Developer's Manual, Volume 2D*.

CR4.FSGSBASE

FSGSBASE-Enable Bit (bit 16 of CR4) — Enables the instructions RDFSBASE, RDGSBASE, WRFSBASE, and WRGSBASE.

CR4.PCIDE

PCID-Enable Bit (bit 17 of CR4) — Enables process-context identifiers (PCIDs) when set. See Section 4.10.1, "Process-Context Identifiers (PCIDs)." Applies only in IA-32e mode (if IA32_EFER.LMA = 1).

CR4.OSXSAVE

XSAVE and Processor Extended States-Enable Bit (bit 18 of CR4) — When set, this flag: (1) indicates (via CPUID.01H:ECX.OSXSAVE[bit 27]) that the operating system supports the use of the XGETBV, XSAVE, and XRSTOR instructions by general software; (2) enables the XSAVE and XRSTOR instructions to save and restore the x87 FPU state (including MMX registers), the SSE state (XMM registers and MXCSR), along with other processor extended states enabled in XCR0; (3) enables the processor to execute XGETBV and XSETBV instructions in order to read and write XCR0. See Section 2.6 and Chapter 14, "System Programming for Instruction Set Extensions and Processor Extended States."

CR4.KL

Key-Locker-Enable Bit (bit 19 of CR4) — When set, the LOADIWKEY instruction is enabled; in addition, if support for the AES Key Locker instructions has been activated by system firmware, CPUID.19H:EBX.AESKLE[bit 0] is enumerated as 1 and the AES Key Locker instructions are enabled.[1] When clear, CPUID.19H:EBX.AESKLE[bit 0] is enumerated as 0 and execution of any Key Locker instruction causes an invalid-opcode exception (#UD).

CR4.SMEP

SMEP-Enable Bit (bit 20 of CR4) — Enables supervisor-mode execution prevention (SMEP) when set. See Section 4.6, "Access Rights."

CR4.SMAP

SMAP-Enable Bit (bit 21 of CR4) — Enables supervisor-mode access prevention (SMAP) when set. See Section 4.6, "Access Rights."

CR4.PKE

Enable protection keys for user-mode pages (bit 22 of CR4) — 4-level paging and 5-level paging associate each user-mode linear address with a protection key. When set, this flag indicates (via CPUID.(EAX=07H,ECX=0H):ECX.OSPKE [bit 4]) that the operating system supports use of the PKRU register to specify, for each protection key, whether user-mode linear addresses with that protection key can be read or written. This bit also enables access to the PKRU register using the RDPKRU and WRPKRU instructions.

---

1. Software can check CPUID.19H:EBX.AESKLE[bit 0] after setting CR4.KL to determine whether the AES Key Locker instructions have been enabled. Note that some processors may allow enabling of those instructions without activation by system firmware. Some processors may not support use of the AES Key Locker instructions in system-management mode (SMM). Those processors enumerate CPUID.19H:EBX.AESKLE[bit 0] as 0 in SMM regardless of the setting of CR4.KL.

CR4.CET

Control-flow Enforcement Technology (bit 23 of CR4) — Enables control-flow enforcement technology when set. See Chapter 17, "Control-Flow Enforcement Technology (CET)" of the *IA-32 Intel® Architecture Software Developer's Manual, Volume 1*. This flag can be set only if CR0.WP is set, and it must be clear before CR0.WP can be cleared (see below).

CR4.PKS

Enable protection keys for supervisor-mode pages (bit 24 of CR4) — 4-level paging and 5-level paging associate each supervisor-mode linear address with a protection key. When set, this flag allows use of the IA32_PKRS MSR to specify, for each protection key, whether supervisor-mode linear addresses with that protection key can be read or written.

CR4.UINTR

User Interrupts Enable Bit (bit 25 of CR4) — Enables user interrupts when set, including user-interrupt delivery, user-interrupt notification identification, and the user-interrupt instructions.

CR8.TPL

Task Priority Level (bit 3:0 of CR8) — This sets the threshold value corresponding to the highest-priority interrupt to be blocked. A value of 0 means all interrupts are enabled. This field is available in 64-bit mode. A value of 15 means all interrupts will be disabled.

2.5.1 CPUID Qualification of Control Register Flags

Not all flags in control register CR4 are implemented on all processors. With the exception of the PCE flag, they can be qualified with the CPUID instruction to determine if they are implemented on the processor before they are used.

The CR8 register is available on processors that support Intel 64 architecture.

2.6 EXTENDED CONTROL REGISTERS (INCLUDING XCR0)

If CPUID.01H:ECX.XSAVE[bit 26] is 1, the processor supports one or more **extended control registers** (XCRs). Currently, the only such register defined is XCR0. This register specifies the set of processor state components for which the operating system provides context management, e.g., x87 FPU state, SSE state, AVX state. The OS programs XCR0 to reflect the features for which it provides context management.

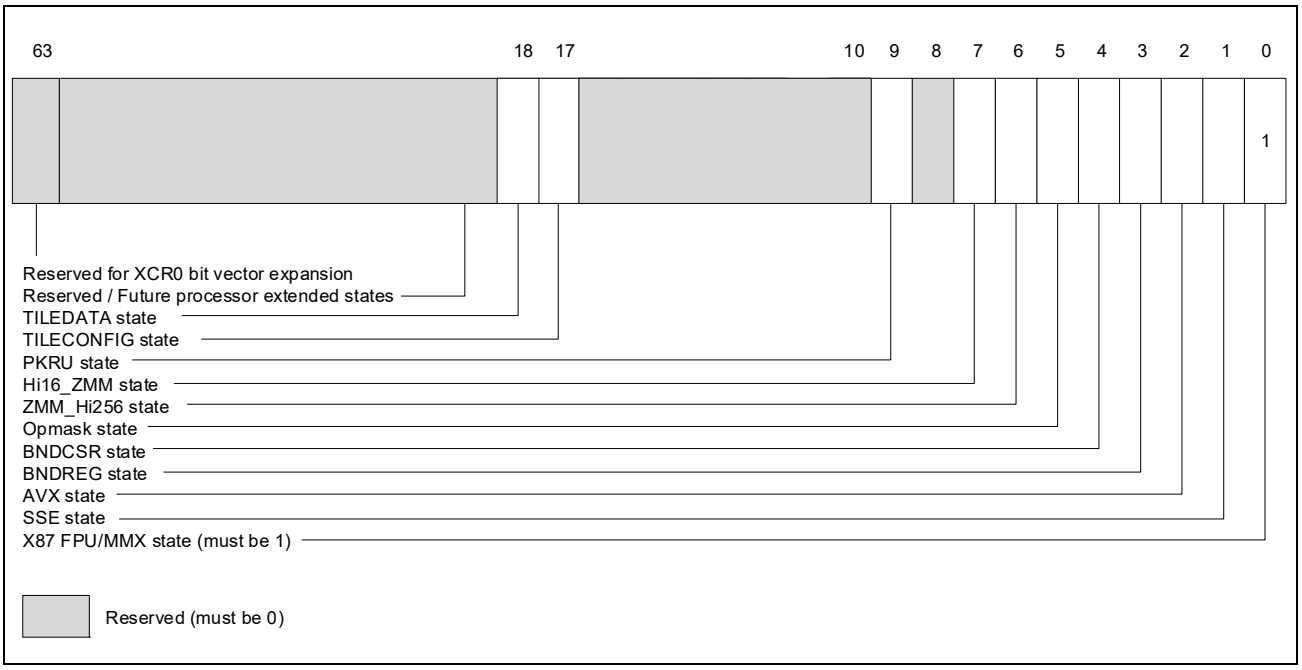

Figure 2-8. XCR0

Software can access XCR0 only if CR4.OSXSAVE[bit 18] = 1. (This bit is also readable as CPUID.01H:ECX.OSXSAVE[bit 27].) Software can use CPUID leaf function 0DH to enumerate the bits in XCR0 that the processor supports (see CPUID instruction in *Intel® 64 and IA-32 Architectures Software Developer's Manual, Volume 2A*). Each supported state component is represented by a bit in XCR0. System software enables state components by loading an appropriate bit mask value into XCR0 using the XSETBV instruction.

As each bit in XCR0 (except bit 63) corresponds to a processor state component, XCR0 thus provides support for up to 63 sets of processor state components. Bit 63 of XCR0 is reserved for future expansion and will not represent a processor state component.

Currently, XCR0 defines support for the following state components:

- XCR0.X87 (bit 0): This bit 0 must be 1. An attempt to write 0 to this bit causes a #GP exception.
- XCR0.SSE (bit 1): If 1, the XSAVE feature set can be used to manage MXCSR and the XMM registers (XMM0-XMM15 in 64-bit mode; otherwise XMM0-XMM7).
- XCR0.AVX (bit 2): If 1, Intel AVX instructions can be executed and the XSAVE feature set can be used to manage the upper halves of the YMM registers (YMM0-YMM15 in 64-bit mode; otherwise YMM0-YMM7).
- XCR0.BNDREG (bit 3): If 1, Intel MPX instructions can be executed and the XSAVE feature set can be used to manage the bounds registers BND0–BND3.
- XCR0.BNDCSR (bit 4): If 1, Intel MPX instructions can be executed and the XSAVE feature set can be used to manage the BNDCFGU and BNDSTATUS registers.
- XCR0.opmask (bit 5): If 1, Intel AVX-512 instructions can be executed and the XSAVE feature set can be used to manage the opmask registers k0–k7.
- XCR0.ZMM_Hi256 (bit 6): If 1, Intel AVX-512 instructions can be executed and the XSAVE feature set can be used to manage the upper halves of the lower ZMM registers (ZMM0-ZMM15 in 64-bit mode; otherwise ZMM0-ZMM7).
- XCR0.Hi16_ZMM (bit 7): If 1, Intel AVX-512 instructions can be executed and the XSAVE feature set can be used to manage the upper ZMM registers (ZMM16-ZMM31, only in 64-bit mode).
- XCR0.PKRU (bit 9): If 1, the XSAVE feature set can be used to manage the PKRU register (see Section 2.7).
- XCR0.TILECFG (bit 17): If 1, and if XCR0.TILEDATA is also 1, Intel AMX instructions can be executed and the XSAVE feature set can be used to manage TILECFG.

- XCR0.TILEDATA (bit 18): If 1, and if XCR0.TILECFG is also 1, Intel AMX instructions can be executed and the XSAVE feature set can be used to manage TILEDATA.

An attempt to use XSETBV to write to XCR0 results in general-protection exceptions (#GP) if it would do any of the following:

- Set a bit reserved in XCR0 for a given processor (as determined by the contents of EAX and EDX after executing CPUID with EAX=0DH, ECX= 0H).
- Clear XCR0.x87.
- Clear XCR0.SSE and set XCR0.AVX.
- Clear XCR0.AVX and set any of XCR0.opmask, XCR0.ZMM_Hi256, or XCR0.Hi16_ZMM.
- Set either XCR0.BNDREG or XCR0.BNDCSR while not setting the other.
- Set any of XCR0.opmask, XCR0.ZMM_Hi256, and XCR0.Hi16_ZMM while not setting all of them.
- Set either XCR0.TILECFG or XCR0.TILEDATA while not setting the other.

After reset, all bits (except bit 0) in XCR0 are cleared to zero; XCR0[0] is set to 1.

2.7 PROTECTION-KEY RIGHTS REGISTERS (PKRU AND IA32_PKRS)

Processors may support either or both of two protection-key rights registers: PKRU for user-mode pages and the IA32_PKRS MSR (MSR index 6E1H) for supervisor-mode pages. 4-level paging and 5-level paging associate a 4-bit **protection key** with each page. The protection-key rights registers determine accessibility based on a page's protection key.

If CPUID.(EAX=07H,ECX=0H):ECX.PKU [bit 3] = 1, the processor supports the protection-key feature for user-mode pages. When CR4.PKE = 1, software can use the **protection-key rights register for user pages** (PKRU) to specify the access rights for user-mode pages for each protection key.

If CPUID.(EAX=07H,ECX=0H):ECX.PKS [bit 31] = 1, the processor supports the protection-key feature for supervisor-mode pages. When CR4.PKS = 1, software can use the **protection-key rights register for supervisor pages** (the IA32_PKRS MSR) to specify the access rights for supervisor-mode pages for each protection key.

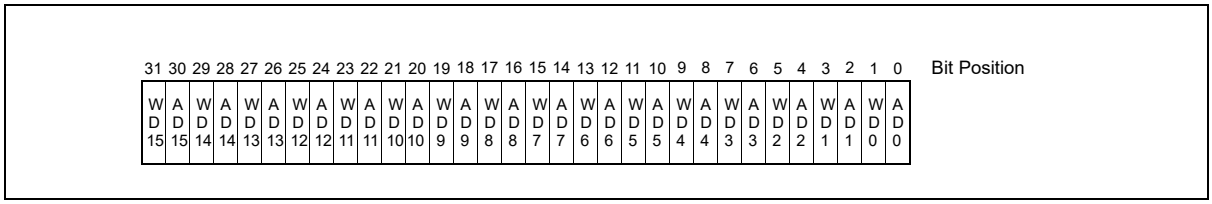

Figure 2-9. Format of Protection-Key Rights Registers

The format of each protection-key rights register is given in Figure 2-9. Each contains 16 pairs of disable controls to prevent data accesses to linear addresses (user-mode or supervisor-mode, depending on the register) based on their protection keys. Each protection key *i* ($0 \le i \le 15$) is associated with two bits in each protection-key rights register:

- Bit 2*i*, shown as "AD*i*" (access disable): if set, the processor prevents any data accesses to linear addresses (user-mode or supervisor-mode, depending on the register) with protection key *i.*
- Bit 2*i*+1, shown as "WD*i*" (write disable): if set, the processor prevents write accesses to linear addresses (user-mode or supervisor-mode, depending on the register) with protection key *i.*

(Bits 63:32 of the IA32_PKRS MSR are reserved and must be zero.)

See Section 4.6.2, "Protection Keys," for details of how the processor uses the protection-key rights registers to control accesses to linear addresses.

Software can read and write PKRU using the RDPKRU and WRPKRU instructions. The IA32_PKRS MSR can be read and written with the RDMSR and WRMSR instructions. Writes to the IA32_PKRS MSR using WRMSR are not serializing.

2.8 SYSTEM INSTRUCTION SUMMARY

System instructions handle system-level functions such as loading system registers, managing the cache, managing interrupts, or setting up the debug registers. Many of these instructions can be executed only by operating-system or executive procedures (that is, procedures running at privilege level 0). Others can be executed at any privilege level and are thus available to application programs.

Table 2-3 lists the system instructions and indicates whether they are available and useful for application programs. These instructions are described in the *Intel® 64 and IA-32 Architectures Software Developer's Manual, Volumes 2A, 2B, 2C & 2D*.

Table 2-3. Summary of System Instructions

Instruction	Description	Useful to Application?	Protected from Application?
LLDT	Load LDT Register	No	Yes
SLDT	Store LDT Register	No	If CR4.UMIP = 1
LGDT	Load GDT Register	No	Yes
SGDT	Store GDT Register	No	If CR4.UMIP = 1
LTR	Load Task Register	No	Yes
STR	Store Task Register	No	If CR4.UMIP = 1
LIDT	Load IDT Register	No	Yes
SIDT	Store IDT Register	No	If CR4.UMIP = 1
MOV CR*n*	Load and store control registers	No	Yes
SMSW	Store MSW	Yes	If CR4.UMIP = 1
LMSW	Load MSW	No	Yes
CLTS	Clear TS flag in CR0	No	Yes
ARPL	Adjust RPL	Yes[1, 5]	No
LAR	Load Access Rights	Yes	No
LSL	Load Segment Limit	Yes	No
VERR	Verify for Reading	Yes	No
VERW	Verify for Writing	Yes	No
MOV DR*n*	Load and store debug registers	No	Yes
INVD	Invalidate cache, no writeback	No	Yes
WBINVD	Invalidate cache, with writeback	No	Yes
INVLPG	Invalidate TLB entry	No	Yes
HLT	Halt Processor	No	Yes
LOCK (Prefix)	Bus Lock	Yes	No
RSM	Return from system management mode	No	Yes
RDMSR[3]	Read Model-Specific Registers	No	Yes
WRMSR[3]	Write Model-Specific Registers	No	Yes
RDPMC[4]	Read Performance-Monitoring Counter	Yes	Yes[2]
RDTSC[3]	Read Time-Stamp Counter	Yes	Yes[2]
RDTSCP[7]	Read Serialized Time-Stamp Counter	Yes	Yes[2]
XGETBV	Return the state of XCR0	Yes	No
XSETBV	Enable one or more processor extended states	No[6]	Yes

Table 2-3. Summary of System Instructions (Contd.)

Instruction	Description	Useful to Application?	Protected from Application?

NOTES:

1. Useful to application programs running at a CPL of 1 or 2.
2. The TSD and PCE flags in control register CR4 control access to these instructions by application programs running at a CPL of 3.
3. These instructions were introduced into the IA-32 Architecture with the Pentium processor.
4. This instruction was introduced into the IA-32 Architecture with the Pentium Pro processor and the Pentium processor with MMX technology.
5. This instruction is not supported in 64-bit mode.
6. Application uses XGETBV to query which set of processor extended states are enabled.
7. RDTSCP is introduced in Intel Core i7 processor.

2.8.1 Loading and Storing System Registers

The GDTR, LDTR, IDTR, and TR registers each have a load and store instruction for loading data into and storing data from the register:

- **LGDT (Load GDTR Register)** — Loads the GDT base address and limit from memory into the GDTR register.
- **SGDT (Store GDTR Register)** — Stores the GDT base address and limit from the GDTR register into memory.
- **LIDT (Load IDTR Register)** — Loads the IDT base address and limit from memory into the IDTR register.
- **SIDT (Store IDTR Register)** — Stores the IDT base address and limit from the IDTR register into memory.
- **LLDT (Load LDTR Register)** — Loads the LDT segment selector and segment descriptor from memory into the LDTR. (The segment selector operand can also be located in a general-purpose register.)
- **SLDT (Store LDTR Register)** — Stores the LDT segment selector from the LDTR register into memory or a general-purpose register.
- **LTR (Load Task Register)** — Loads segment selector and segment descriptor for a TSS from memory into the task register. (The segment selector operand can also be located in a general-purpose register.)
- **STR (Store Task Register)** — Stores the segment selector for the current task TSS from the task register into memory or a general-purpose register.

The LMSW (load machine status word) and SMSW (store machine status word) instructions operate on bits 0 through 15 of control register CR0. These instructions are provided for compatibility with the 16-bit Intel 286 processor. Programs written to run on 32-bit IA-32 processors should not use these instructions. Instead, they should access the control register CR0 using the MOV CR instruction.

The CLTS (clear TS flag in CR0) instruction is provided for use in handling a device-not-available exception (#NM) that occurs when the processor attempts to execute a floating-point instruction when the TS flag is set. This instruction allows the TS flag to be cleared after the x87 FPU context has been saved, preventing further #NM exceptions. See Section 2.5, "Control Registers," for more information on the TS flag.

The control registers (CR0, CR1, CR2, CR3, CR4, and CR8) are loaded using the MOV instruction. The instruction loads a control register from a general-purpose register or stores the content of a control register in a general-purpose register.

2.8.2 Verifying of Access Privileges

The processor provides several instructions for examining segment selectors and segment descriptors to determine if access to their associated segments is allowed. These instructions duplicate some of the automatic access rights and type checking done by the processor, thus allowing operating-system or executive software to prevent exceptions from being generated.

The ARPL (adjust RPL) instruction adjusts the RPL (requestor privilege level) of a segment selector to match that of the program or procedure that supplied the segment selector. See Section 5.10.4, "Checking Caller Access Privileges (ARPL Instruction)," for a detailed explanation of the function and use of this instruction. Note that ARPL is not supported in 64-bit mode.

The LAR (load access rights) instruction verifies the accessibility of a specified segment and loads access rights information from the segment's segment descriptor into a general-purpose register. Software can then examine the access rights to determine if the segment type is compatible with its intended use. See Section 5.10.1, "Checking Access Rights (LAR Instruction)," for a detailed explanation of the function and use of this instruction.

The LSL (load segment limit) instruction verifies the accessibility of a specified segment and loads the segment limit from the segment's segment descriptor into a general-purpose register. Software can then compare the segment limit with an offset into the segment to determine whether the offset lies within the segment. See Section 5.10.3, "Checking That the Pointer Offset Is Within Limits (LSL Instruction)," for a detailed explanation of the function and use of this instruction.

The VERR (verify for reading) and VERW (verify for writing) instructions verify if a selected segment is readable or writable, respectively, at a given CPL. See Section 5.10.2, "Checking Read/Write Rights (VERR and VERW Instructions)," for a detailed explanation of the function and use of these instructions.

2.8.3 Loading and Storing Debug Registers

Internal debugging facilities in the processor are controlled by a set of 8 debug registers (DR0-DR7). The MOV instruction allows setup data to be loaded to and stored from these registers.

On processors that support Intel 64 architecture, debug registers DR0-DR7 are 64 bits. In 32-bit modes and compatibility mode, writes to a debug register fill the upper 32 bits with zeros. Reads return the lower 32 bits. In 64-bit mode, the upper 32 bits of DR6-DR7 are reserved and must be written with zeros. Writing one to any of the upper 32 bits causes an exception, #GP(0).

In 64-bit mode, MOV DRn instructions read or write all 64 bits of a debug register (operand-size prefixes are ignored). All 64 bits of DR0-DR3 are writable by software. However, MOV DRn instructions do not check that addresses written to DR0-DR3 are in the limits of the implementation. Address matching is supported only on valid addresses generated by the processor implementation.

2.8.4 Invalidating Caches and TLBs

The processor provides several instructions for use in explicitly invalidating its caches and TLB entries. The INVD (invalidate cache with no writeback) instruction invalidates all data and instruction entries in the internal caches and sends a signal to the external caches indicating that they should also be invalidated.

The WBINVD (invalidate cache with writeback) instruction performs the same function as the INVD instruction, except that it writes back modified lines in its internal caches to memory before it invalidates the caches. After invalidating the caches local to the executing logical processor or processor core, WBINVD signals caches higher in the cache hierarchy (caches shared with the invalidating logical processor or core) to write back any data they have in modified state at the time of instruction execution and to invalidate their contents.

Note, non-shared caches may not be written back nor invalidated. In Figure 2-10 below, if code executing on either LP0 or LP1 were to execute a WBINVD, the shared L1 and L2 for LP0/LP1 will be written back and invalidated as will the shared L3. However, the L1 and L2 caches not shared with LP0 and LP1 will not be written back nor invalidated.

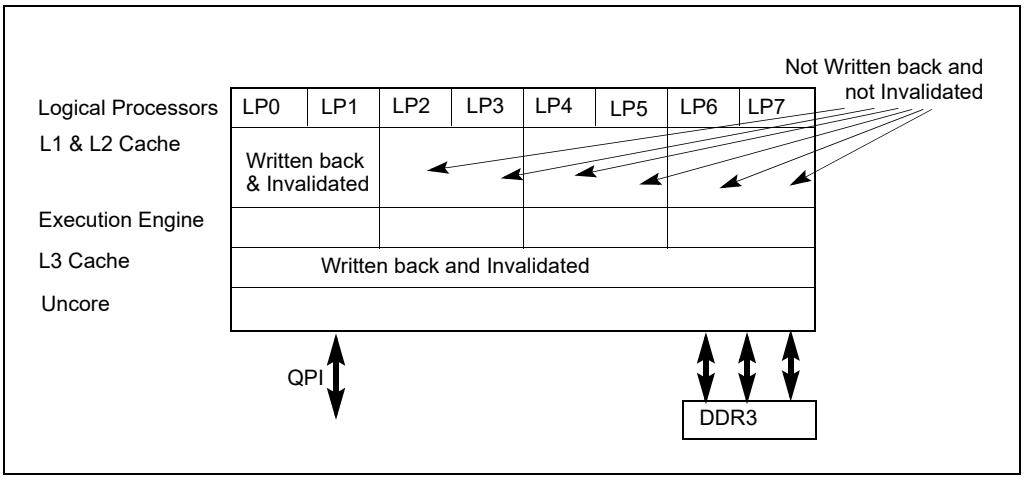

Figure 2-10. WBINVD Invalidation of Shared and Non-Shared Cache Hierarchy

The INVLPG (invalidate TLB entry) instruction invalidates (flushes) the TLB entry for a specified page.

2.8.5 Controlling the Processor

The HLT (halt processor) instruction stops the processor until an enabled interrupt (such as NMI or SMI, which are normally enabled), a debug exception, the BINIT# signal, the INIT# signal, or the RESET# signal is received. The processor generates a special bus cycle to indicate that the halt mode has been entered.

Hardware may respond to this signal in a number of ways. An indicator light on the front panel may be turned on. An NMI interrupt for recording diagnostic information may be generated. Reset initialization may be invoked (note that the BINIT# pin was introduced with the Pentium Pro processor). If any non-wake events are pending during shutdown, they will be handled after the wake event from shutdown is processed (for example, A20M# interrupts).

The LOCK prefix invokes a locked (atomic) read-modify-write operation when modifying a memory operand. This mechanism is used to allow reliable communications between processors in multiprocessor systems, as described below:

- In the Pentium processor and earlier IA-32 processors, the LOCK prefix causes the processor to assert the LOCK# signal during the instruction. This always causes an explicit bus lock to occur.
- In the Pentium 4, Intel Xeon, and P6 family processors, the locking operation is handled with either a cache lock or bus lock. If a memory access is cacheable and affects only a single cache line, a cache lock is invoked and the system bus and the actual memory location in system memory are not locked during the operation. Here, other Pentium 4, Intel Xeon, or P6 family processors on the bus write-back any modified data and invalidate their caches as necessary to maintain system memory coherency. If the memory access is not cacheable and/or it crosses a cache line boundary, the processor's LOCK# signal is asserted and the processor does not respond to requests for bus control during the locked operation.

The RSM (return from SMM) instruction restores the processor (from a context dump) to the state it was in prior to a system management mode (SMM) interrupt.

2.8.6 Reading Performance-Monitoring and Time-Stamp Counters

The RDPMC (read performance-monitoring counter) and RDTSC (read time-stamp counter) instructions allow application programs to read the processor's performance-monitoring and time-stamp counters, respectively. Processors based on Intel NetBurst® microarchitecture have eighteen 40-bit performance-monitoring counters; P6 family processors have two 40-bit counters. Intel Atom® processors and most of the processors based on the Intel Core microarchitecture support two types of performance monitoring counters: programmable performance counters similar to those available in the P6 family, and three fixed-function performance monitoring counters. Details

of programmable and fixed-function performance monitoring counters for each processor generation are described in Chapter 20, "Performance Monitoring".

The programmable performance counters can support counting either the occurrence or duration of events. Events that can be monitored on programmable counters generally are model specific (except for architectural performance events enumerated by CPUID leaf 0AH); they may include the number of instructions decoded, interrupts received, or the number of cache loads. Individual counters can be set up to monitor different events. Use the system instruction WRMSR to set up values in one of the IA32_PERFEVTSELx MSR, in one of the 45 ESCRs and one of the 18 CCCR MSRs (for Pentium 4 and Intel Xeon processors); or in the PerfEvtSel0 or the PerfEvtSel1 MSR (for the P6 family processors). The RDPMC instruction loads the current count from the selected counter into the EDX:EAX registers.

Fixed-function performance counters record only specific events that are defined at: https://perfmon-events.intel.com/, and the width/number of fixed-function counters are enumerated by CPUID leaf 0AH.

The time-stamp counter is a model-specific 64-bit counter that is reset to zero each time the processor is reset. If not reset, the counter will increment ~9.5×10^{16} times per year when the processor is operating at a clock rate of 3GHz. At this clock frequency, it would take over 190 years for the counter to wrap around. The RDTSC instruction loads the current count of the time-stamp counter into the EDX:EAX registers.

See Section 20.1, "Performance Monitoring Overview," and Section 18.17, "Time-Stamp Counter," for more information about the performance monitoring and time-stamp counters.

The RDTSC instruction was introduced into the IA-32 architecture with the Pentium processor. The RDPMC instruction was introduced into the IA-32 architecture with the Pentium Pro processor and the Pentium processor with MMX technology. Earlier Pentium processors have two performance-monitoring counters, but they can be read only with the RDMSR instruction, and only at privilege level 0.

2.8.6.1 Reading Counters in 64-Bit Mode

In 64-bit mode, RDTSC operates the same as in protected mode. The count in the time-stamp counter is stored in EDX:EAX (or RDX[31:0]:RAX[31:0] with RDX[63:32]:RAX[63:32] cleared).

RDPMC requires an index to specify the offset of the performance-monitoring counter. In 64-bit mode for Pentium 4 or Intel Xeon processor families, the index is specified in ECX[30:0]. The current count of the performance-monitoring counter is stored in EDX:EAX (or RDX[31:0]:RAX[31:0] with RDX[63:32]:RAX[63:32] cleared).

2.8.7 Reading and Writing Model-Specific Registers

The RDMSR (read model-specific register) and WRMSR (write model-specific register) instructions allow a processor's 64-bit model-specific registers (MSRs) to be read and written, respectively. The MSR to be read or written is specified by the value in the ECX register.

RDMSR reads the value from the specified MSR to the EDX:EAX registers; WRMSR writes the value in the EDX:EAX registers to the specified MSR. RDMSR and WRMSR were introduced into the IA-32 architecture with the Pentium processor.

See Section 10.4, "Model-Specific Registers (MSRs)," for more information.

2.8.7.1 Reading and Writing Model-Specific Registers in 64-Bit Mode

RDMSR and WRMSR require an index to specify the address of an MSR. In 64-bit mode, the index is 32 bits; it is specified using ECX.

2.8.8 Enabling Processor Extended States

The XSETBV instruction is required to enable OS support of individual processor extended states in XCR0 (see Section 2.6).

CHAPTER 3
PROTECTED-MODE MEMORY MANAGEMENT

This chapter describes the Intel 64 and IA-32 architecture's protected-mode memory management facilities, including the physical memory requirements, segmentation mechanism, and paging mechanism.

See also: Chapter 5, "Protection" (for a description of the processor's protection mechanism) and Chapter 21, "8086 Emulation" (for a description of memory addressing protection in real-address and virtual-8086 modes).

3.1 MEMORY MANAGEMENT OVERVIEW

The memory management facilities of the IA-32 architecture are divided into two parts: segmentation and paging. Segmentation provides a mechanism of isolating individual code, data, and stack modules so that multiple programs (or tasks) can run on the same processor without interfering with one another. Paging provides a mechanism for implementing a conventional demand-paged, virtual-memory system where sections of a program's execution environment are mapped into physical memory as needed. Paging can also be used to provide isolation between multiple tasks. When operating in protected mode, some form of segmentation must be used. **There is no mode bit to disable segmentation.** The use of paging, however, is optional.

These two mechanisms (segmentation and paging) can be configured to support simple single-program (or single-task) systems, multitasking systems, or multiple-processor systems that used shared memory.

As shown in Figure 3-1, segmentation provides a mechanism for dividing the processor's addressable memory space (called the **linear address space**) into smaller protected address spaces called **segments**. Segments can be used to hold the code, data, and stack for a program or to hold system data structures (such as a TSS or LDT). If more than one program (or task) is running on a processor, each program can be assigned its own set of segments. The processor then enforces the boundaries between these segments and ensures that one program does not interfere with the execution of another program by writing into the other program's segments. The segmentation mechanism also allows typing of segments so that the operations that may be performed on a particular type of segment can be restricted.

All the segments in a system are contained in the processor's linear address space. To locate a byte in a particular segment, a **logical address** (also called a far pointer) must be provided. A logical address consists of a segment selector and an offset. The segment selector is a unique identifier for a segment. Among other things it provides an offset into a descriptor table (such as the global descriptor table, GDT) to a data structure called a segment descriptor. Each segment has a segment descriptor, which specifies the size of the segment, the access rights and privilege level for the segment, the segment type, and the location of the first byte of the segment in the linear address space (called the base address of the segment). The offset part of the logical address is added to the base address for the segment to locate a byte within the segment. The base address plus the offset thus forms a **linear address** in the processor's linear address space.

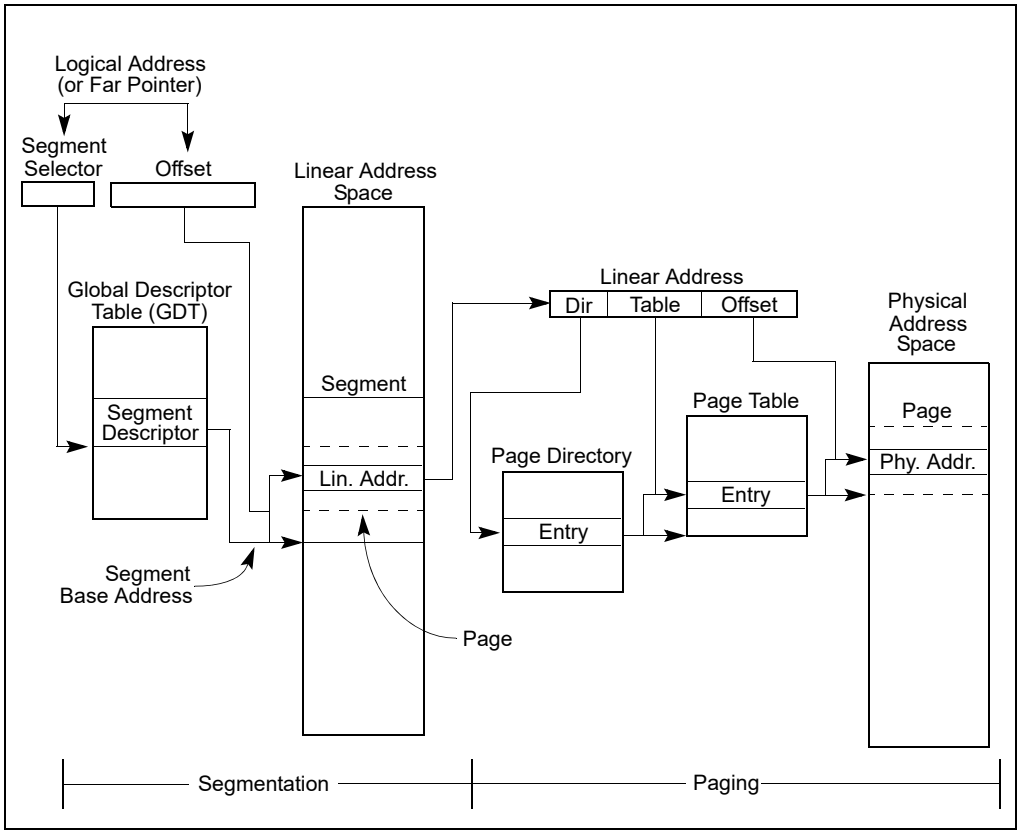

Figure 3-1. Segmentation and Paging

If paging is not used, the linear address space of the processor is mapped directly into the physical address space of processor. The physical address space is defined as the range of addresses that the processor can generate on its address bus.

Because multitasking computing systems commonly define a linear address space much larger than it is economically feasible to contain all at once in physical memory, some method of "virtualizing" the linear address space is needed. This virtualization of the linear address space is handled through the processor's paging mechanism.

Paging supports a "virtual memory" environment where a large linear address space is simulated with a small amount of physical memory (RAM and ROM) and some disk storage. When using paging, each segment is divided into pages (typically 4 KBytes each in size), which are stored either in physical memory or on the disk. The operating system or executive maintains a page directory and a set of page tables to keep track of the pages. When a program (or task) attempts to access an address location in the linear address space, the processor uses the page directory and page tables to translate the linear address into a physical address and then performs the requested operation (read or write) on the memory location.

If the page being accessed is not currently in physical memory, the processor interrupts execution of the program (by generating a page-fault exception). The operating system or executive then reads the page into physical memory from the disk and continues executing the program.

When paging is implemented properly in the operating-system or executive, the swapping of pages between physical memory and the disk is transparent to the correct execution of a program. Even programs written for 16-bit IA-32 processors can be paged (transparently) when they are run in virtual-8086 mode.

3.2 USING SEGMENTS

The segmentation mechanism supported by the IA-32 architecture can be used to implement a wide variety of system designs. These designs range from flat models that make only minimal use of segmentation to protect

programs to multi-segmented models that employ segmentation to create a robust operating environment in which multiple programs and tasks can be executed reliably.

The following sections give several examples of how segmentation can be employed in a system to improve memory management performance and reliability.

3.2.1 Basic Flat Model

The simplest memory model for a system is the basic "flat model," in which the operating system and application programs have access to a continuous, unsegmented address space. To the greatest extent possible, this basic flat model hides the segmentation mechanism of the architecture from both the system designer and the application programmer.

To implement a basic flat memory model with the IA-32 architecture, at least two segment descriptors must be created, one for referencing a code segment and one for referencing a data segment (see Figure 3-2). Both of these segments, however, are mapped to the entire linear address space: that is, both segment descriptors have the same base address value of 0 and the same segment limit of 4 GBytes. By setting the segment limit to 4 GBytes, the segmentation mechanism is kept from generating exceptions for out of limit memory references, even if no physical memory resides at a particular address. ROM (EPROM) is generally located at the top of the physical address space, because the processor begins execution at FFFF_FFF0H. RAM (DRAM) is placed at the bottom of the address space because the initial base address for the DS data segment after reset initialization is 0.

3.2.2 Protected Flat Model

The protected flat model is similar to the basic flat model, except the segment limits are set to include only the range of addresses for which physical memory actually exists (see Figure 3-3). A general-protection exception (#GP) is then generated on any attempt to access nonexistent memory. This model provides a minimum level of hardware protection against some kinds of program bugs.

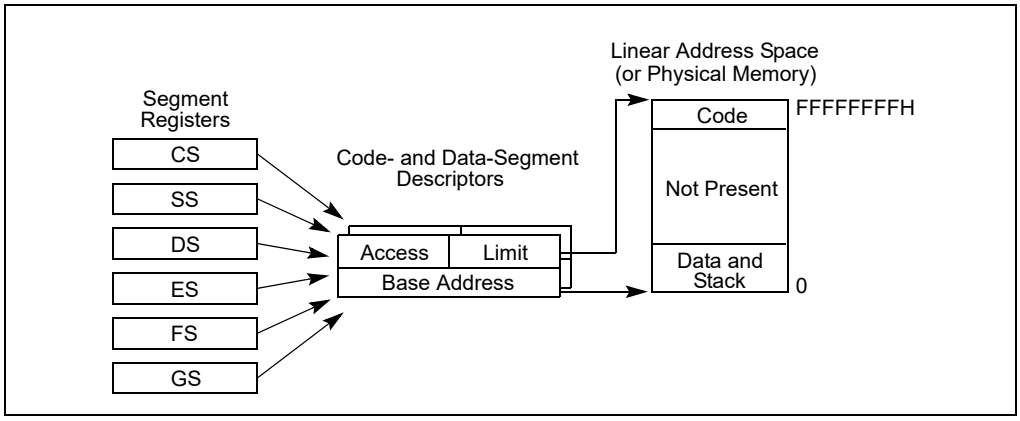

Figure 3-2. Flat Model

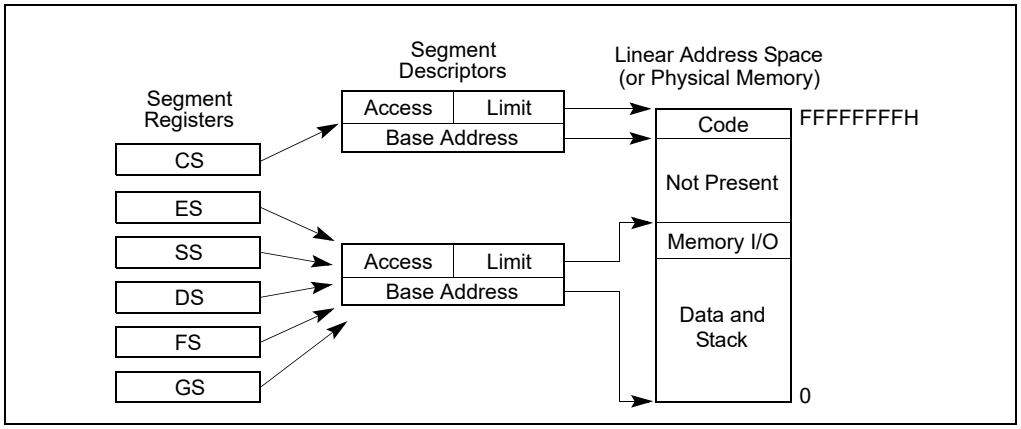

Figure 3-3. Protected Flat Model

More complexity can be added to this protected flat model to provide more protection. For example, for the paging mechanism to provide isolation between user and supervisor code and data, four segments need to be defined: code and data segments at privilege level 3 for the user, and code and data segments at privilege level 0 for the supervisor. Usually these segments all overlay each other and start at address 0 in the linear address space. This flat segmentation model along with a simple paging structure can protect the operating system from applications, and by adding a separate paging structure for each task or process, it can also protect applications from each other. Similar designs are used by several popular multitasking operating systems.

3.2.3 Multi-Segment Model

A multi-segment model (such as the one shown in Figure 3-4) uses the full capabilities of the segmentation mechanism to provide hardware enforced protection of code, data structures, and programs and tasks. Here, each program (or task) is given its own table of segment descriptors and its own segments. The segments can be completely private to their assigned programs or shared among programs. Access to all segments and to the execution environments of individual programs running on the system is controlled by hardware.

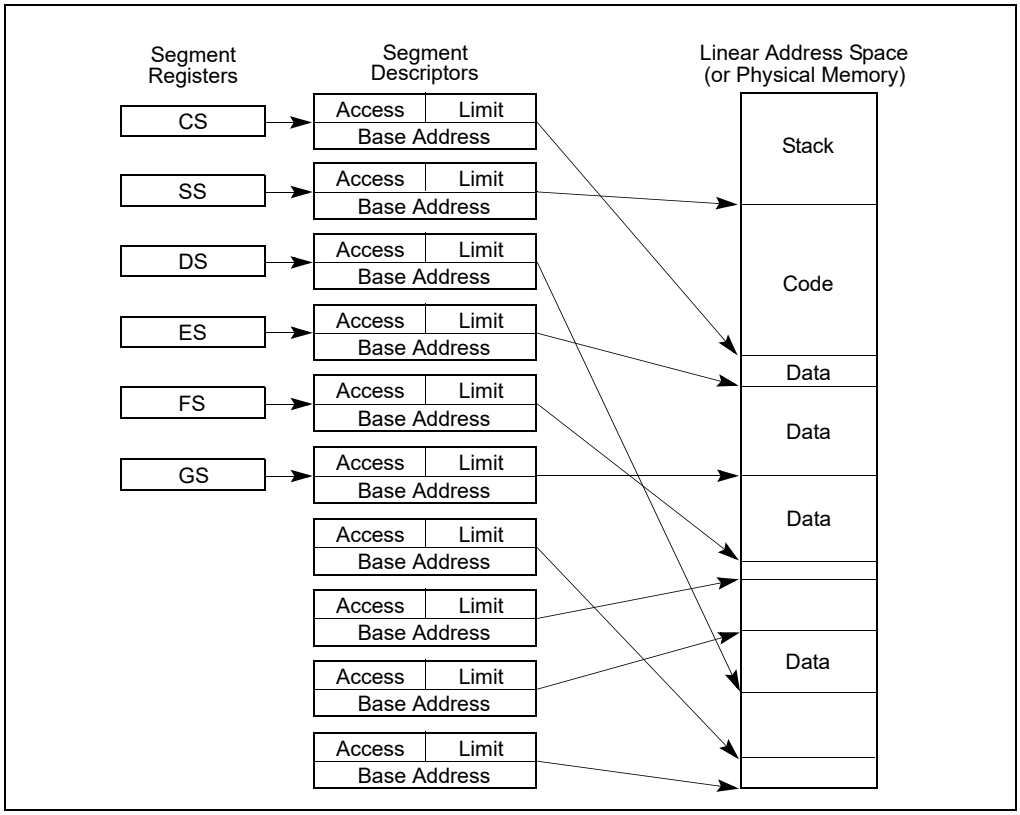

Figure 3-4. Multi-Segment Model

Access checks can be used to protect not only against referencing an address outside the limit of a segment, but also against performing disallowed operations in certain segments. For example, since code segments are designated as read-only segments, hardware can be used to prevent writes into code segments. The access rights information created for segments can also be used to set up protection rings or levels. Protection levels can be used to protect operating-system procedures from unauthorized access by application programs.

3.2.4 Segmentation in IA-32e Mode

In IA-32e mode of Intel 64 architecture, the effects of segmentation depend on whether the processor is running in compatibility mode or 64-bit mode. In compatibility mode, segmentation functions just as it does using legacy 16-bit or 32-bit protected mode semantics.

In 64-bit mode, segmentation is generally (but not completely) disabled, creating a flat 64-bit linear-address space. The processor treats the segment base of CS, DS, ES, SS as zero, creating a linear address that is equal to the effective address. The FS and GS segments are exceptions. These segment registers (which hold the segment base) can be used as additional base registers in linear address calculations. They facilitate addressing local data and certain operating system data structures.

Note that the processor does not perform segment limit checks at runtime in 64-bit mode.

3.2.5 Paging and Segmentation

Paging can be used with any of the segmentation models described in Figures 3-2, 3-3, and 3-4. The processor's paging mechanism divides the linear address space (into which segments are mapped) into pages (as shown in Figure 3-1). These linear-address-space pages are then mapped to pages in the physical address space. The paging mechanism offers several page-level protection facilities that can be used with or instead of the segment-

protection facilities. For example, it lets read-write protection be enforced on a page-by-page basis. The paging mechanism also provides two-level user-supervisor protection that can also be specified on a page-by-page basis.

3.3 PHYSICAL ADDRESS SPACE

In protected mode, the IA-32 architecture provides a normal physical address space of 4 GBytes (2^{32} bytes). This is the address space that the processor can address on its address bus. This address space is flat (unsegmented), with addresses ranging continuously from 0 to FFFFFFFFH. This physical address space can be mapped to read-write memory, read-only memory, and memory mapped I/O. The memory mapping facilities described in this chapter can be used to divide this physical memory up into segments and/or pages.

Starting with the Pentium Pro processor, the IA-32 architecture also supports an extension of the physical address space to 2^{36} bytes (64 GBytes); with a maximum physical address of FFFFFFFFFH. This extension is invoked in either of two ways:

- Using the physical address extension (PAE) flag, located in bit 5 of control register CR4.
- Using the 36-bit page size extension (PSE-36) feature (introduced in the Pentium III processors).

Physical address support has since been extended beyond 36 bits. See Chapter 4, "Paging" for more information about 36-bit physical addressing.

3.3.1 Intel® 64 Processors and Physical Address Space

On processors that support Intel 64 architecture (CPUID.80000001H:EDX[29] = 1), the size of the physical address range is implementation-specific and indicated by CPUID.80000008H:EAX[bits 7-0].

For the format of information returned in EAX, see "CPUID—CPU Identification" in Chapter 3 of the *Intel® 64 and IA-32 Architectures Software Developer's Manual, Volume 2A*. See also: Chapter 4, "Paging."

3.4 LOGICAL AND LINEAR ADDRESSES

At the system-architecture level in protected mode, the processor uses two stages of address translation to arrive at a physical address: logical-address translation and linear address space paging.

Even with the minimum use of segments, every byte in the processor's address space is accessed with a logical address. A logical address consists of a 16-bit segment selector and a 32-bit offset (see Figure 3-5). The segment selector identifies the segment the byte is located in and the offset specifies the location of the byte in the segment relative to the base address of the segment.

The processor translates every logical address into a linear address. A linear address is a 32-bit address in the processor's linear address space. Like the physical address space, the linear address space is a flat (unsegmented), 2^{32}-byte address space, with addresses ranging from 0 to FFFFFFFFH. The linear address space contains all the segments and system tables defined for a system.

To translate a logical address into a linear address, the processor does the following:

1. Uses the offset in the segment selector to locate the segment descriptor for the segment in the GDT or LDT and reads it into the processor. (This step is needed only when a new segment selector is loaded into a segment register.)
2. Examines the segment descriptor to check the access rights and range of the segment to ensure that the segment is accessible and that the offset is within the limits of the segment.
3. Adds the base address of the segment from the segment descriptor to the offset to form a linear address.

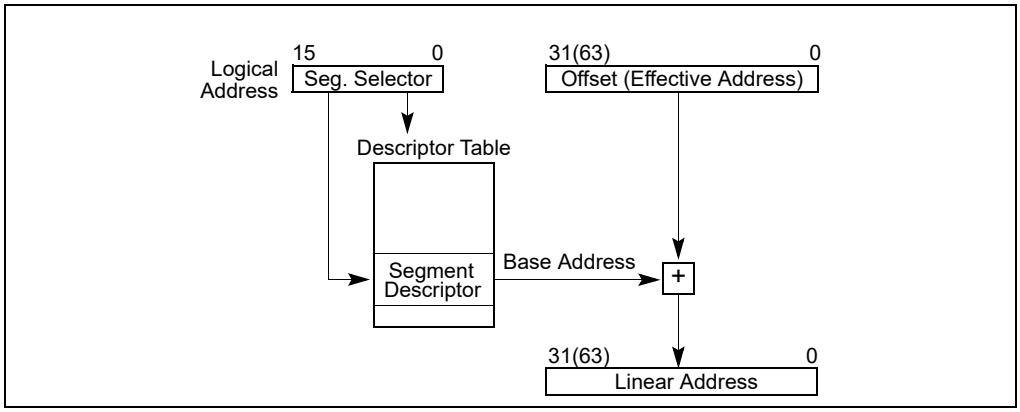

Figure 3-5. Logical Address to Linear Address Translation

If paging is not used, the processor maps the linear address directly to a physical address (that is, the linear address goes out on the processor's address bus). If the linear address space is paged, a second level of address translation is used to translate the linear address into a physical address.

See also: Chapter 4, "Paging."

3.4.1 Logical Address Translation in IA-32e Mode

In IA-32e mode, an Intel 64 processor uses the steps described above to translate a logical address to a linear address. In 64-bit mode, the offset and base address of the segment are 64-bits instead of 32 bits. The linear address format is also 64 bits wide and is subject to the canonical form requirement.

Each code segment descriptor provides an L bit. This bit allows a code segment to execute 64-bit code or legacy 32-bit code by code segment.

3.4.2 Segment Selectors

A segment selector is a 16-bit identifier for a segment (see Figure 3-6). It does not point directly to the segment, but instead points to the segment descriptor that defines the segment. A segment selector contains the following items:

Index (Bits 3 through 15) — Selects one of 8192 descriptors in the GDT or LDT. The processor multiplies the index value by 8 (the number of bytes in a segment descriptor) and adds the result to the base address of the GDT or LDT (from the GDTR or LDTR register, respectively).

TI (table indicator) flag
(Bit 2) — Specifies the descriptor table to use: clearing this flag selects the GDT; setting this flag selects the current LDT.

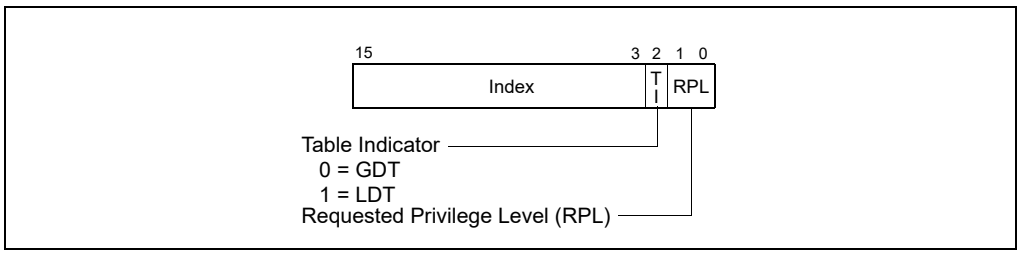

Figure 3-6. Segment Selector

Requested Privilege Level (RPL)
(Bits 0 and 1) — Specifies the privilege level of the selector. The privilege level can range from 0 to 3, with 0 being the most privileged level. See Section 5.5, "Privilege Levels," for a description of the relationship of the RPL to the CPL of the executing program (or task) and the descriptor privilege level (DPL) of the descriptor the segment selector points to.

The first entry of the GDT is not used by the processor. A segment selector that points to this entry of the GDT (that is, a segment selector with an index of 0 and the TI flag set to 0) is used as a "null segment selector." The processor does not generate an exception when a segment register (other than the CS or SS registers) is loaded with a null selector. It does, however, generate an exception when a segment register holding a null selector is used to access memory. A null selector can be used to initialize unused segment registers. Loading the CS or SS register with a null segment selector causes a general-protection exception (#GP) to be generated.

Segment selectors are visible to application programs as part of a pointer variable, but the values of selectors are usually assigned or modified by link editors or linking loaders, not application programs.

3.4.3 Segment Registers

To reduce address translation time and coding complexity, the processor provides registers for holding up to 6 segment selectors (see Figure 3-7). Each of these segment registers support a specific kind of memory reference (code, stack, or data). For virtually any kind of program execution to take place, at least the code-segment (CS), data-segment (DS), and stack-segment (SS) registers must be loaded with valid segment selectors. The processor also provides three additional data-segment registers (ES, FS, and GS), which can be used to make additional data segments available to the currently executing program (or task).

For a program to access a segment, the segment selector for the segment must have been loaded in one of the segment registers. So, although a system can define thousands of segments, only 6 can be available for immediate use. Other segments can be made available by loading their segment selectors into these registers during program execution.

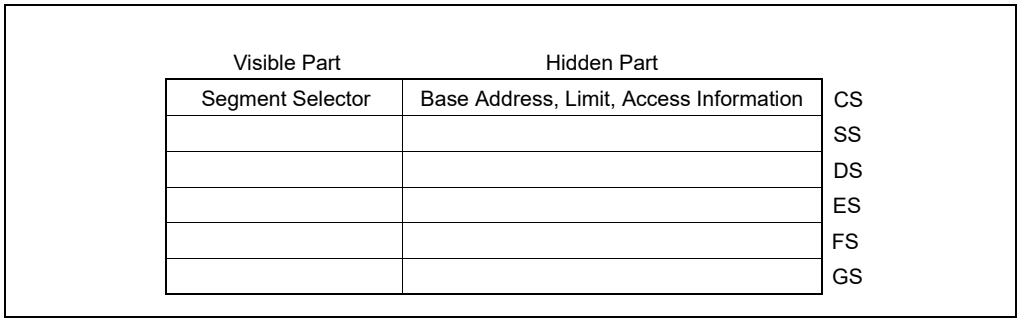

Figure 3-7. Segment Registers

Every segment register has a "visible" part and a "hidden" part. (The hidden part is sometimes referred to as a "descriptor cache" or a "shadow register.") When a segment selector is loaded into the visible part of a segment register, the processor also loads the hidden part of the segment register with the base address, segment limit, and access control information from the segment descriptor pointed to by the segment selector. The information cached in the segment register (visible and hidden) allows the processor to translate addresses without taking extra bus cycles to read the base address and limit from the segment descriptor. In systems in which multiple processors have access to the same descriptor tables, it is the responsibility of software to reload the segment registers when the descriptor tables are modified. If this is not done, an old segment descriptor cached in a segment register might be used after its memory-resident version has been modified.

Two kinds of load instructions are provided for loading the segment registers:

1. Direct load instructions such as the MOV, POP, LDS, LES, LSS, LGS, and LFS instructions. These instructions explicitly reference the segment registers.
2. Implied load instructions such as the far pointer versions of the CALL, JMP, and RET instructions, the SYSENTER and SYSEXIT instructions, and the IRET, INT *n*, INTO, INT3, and INT1 instructions. These instructions change

the contents of the CS register (and sometimes other segment registers) as an incidental part of their operation.

The MOV instruction can also be used to store the visible part of a segment register in a general-purpose register.

3.4.4 Segment Loading Instructions in IA-32e Mode

Because ES, DS, and SS segment registers are not used in 64-bit mode, their fields (base, limit, and attribute) in segment descriptor registers are ignored. Some forms of segment load instructions are also invalid (for example, LDS, POP ES). Address calculations that reference the ES, DS, or SS segments are treated as if the segment base is zero.

The processor checks that all linear-address references are in canonical form instead of performing limit checks. Mode switching does not change the contents of the segment registers or the associated descriptor registers. These registers are also not changed during 64-bit mode execution, unless explicit segment loads are performed.

In order to set up compatibility mode for an application, segment-load instructions (MOV to Sreg, POP Sreg) work normally in 64-bit mode. An entry is read from the system descriptor table (GDT or LDT) and is loaded in the hidden portion of the segment register. The descriptor-register base, limit, and attribute fields are all loaded. However, the contents of the data and stack segment selector and the descriptor registers are ignored.

When FS and GS segment overrides are used in 64-bit mode, their respective base addresses are used in the linear address calculation: (FS or GS).base + index + displacement. FS.base and GS.base are then expanded to the full linear-address size supported by the implementation. The resulting effective address calculation can wrap across positive and negative addresses; the resulting linear address must be canonical.

In 64-bit mode, memory accesses using FS-segment and GS-segment overrides are not checked for a runtime limit nor subjected to attribute-checking. Normal segment loads (MOV to Sreg and POP Sreg) into FS and GS load a standard 32-bit base value in the hidden portion of the segment register. The base address bits above the standard 32 bits are cleared to 0 to allow consistency for implementations that use less than 64 bits.

The hidden descriptor register fields for FS.base and GS.base are physically mapped to MSRs in order to load all address bits supported by a 64-bit implementation. Software with CPL = 0 (privileged software) can load all supported linear-address bits into FS.base or GS.base using WRMSR. Addresses written into the 64-bit FS.base and GS.base registers must be in canonical form. A WRMSR instruction that attempts to write a non-canonical address to those registers causes a #GP fault.

When in compatibility mode, FS and GS overrides operate as defined by 32-bit mode behavior regardless of the value loaded into the upper 32 linear-address bits of the hidden descriptor register base field. Compatibility mode ignores the upper 32 bits when calculating an effective address.

A new 64-bit mode instruction, SWAPGS, can be used to load GS base. SWAPGS exchanges the kernel data structure pointer from the IA32_KERNEL_GS_BASE MSR with the GS base register. The kernel can then use the GS prefix on normal memory references to access the kernel data structures. An attempt to write a non-canonical value (using WRMSR) to the IA32_KERNEL_GS_BASE MSR causes a #GP fault.

3.4.5 Segment Descriptors

A segment descriptor is a data structure in a GDT or LDT that provides the processor with the size and location of a segment, as well as access control and status information. Segment descriptors are typically created by compilers, linkers, loaders, or the operating system or executive, but not application programs. Figure 3-8 illustrates the general descriptor format for all types of segment descriptors.

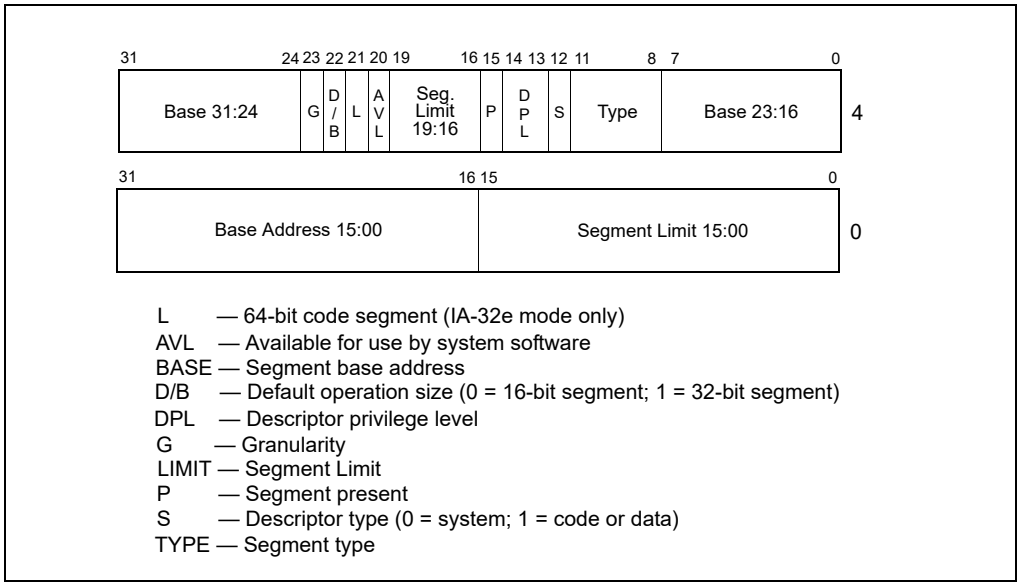

Figure 3-8. Segment Descriptor

The flags and fields in a segment descriptor are as follows:

Segment limit field
Specifies the size of the segment. The processor puts together the two segment limit fields to form a 20-bit value. The processor interprets the segment limit in one of two ways, depending on the setting of the G (granularity) flag:

- If the granularity flag is clear, the segment size can range from 1 byte to 1 MByte, in byte increments.
- If the granularity flag is set, the segment size can range from 4 KBytes to 4 GBytes, in 4-KByte increments.

The processor uses the segment limit in two different ways, depending on whether the segment is an expand-up or an expand-down segment. See Section 3.4.5.1, "Code- and Data-Segment Descriptor Types," for more information about segment types. For expand-up segments, the offset in a logical address can range from 0 to the segment limit. Offsets greater than the segment limit generate general-protection exceptions (#GP, for all segments other than SS) or stack-fault exceptions (#SS for the SS segment). For expand-down segments, the segment limit has the reverse function; the offset can range from the segment limit plus 1 to FFFFFFFFH or FFFFH, depending on the setting of the B flag. Offsets less than or equal to the segment limit generate general-protection exceptions or stack-fault exceptions. Decreasing the value in the segment limit field for an expand-down segment allocates new memory at the bottom of the segment's address space, rather than at the top. IA-32 architecture stacks always grow downwards, making this mechanism convenient for expandable stacks.

Base address fields
Defines the location of byte 0 of the segment within the 4-GByte linear address space. The processor puts together the three base address fields to form a single 32-bit value. Segment base addresses should be aligned to 16-byte boundaries. Although 16-byte alignment is not required, this alignment allows programs to maximize performance by aligning code and data on 16-byte boundaries.

Type field Indicates the segment or gate type and specifies the kinds of access that can be made to the segment and the direction of growth. The interpretation of this field depends on whether the descriptor type flag specifies an application (code or data) descriptor or a system descriptor. The encoding of the type field is different for code, data, and system descriptors (see Figure 5-1). See Section 3.4.5.1, "Code- and Data-Segment Descriptor Types," for a description of how this field is used to specify code and data-segment types.

S (descriptor type) flag
Specifies whether the segment descriptor is for a system segment (S flag is clear) or a code or data segment (S flag is set).

DPL (descriptor privilege level) field
Specifies the privilege level of the segment. The privilege level can range from 0 to 3, with 0 being the most privileged level. The DPL is used to control access to the segment. See Section 5.5, "Privilege Levels," for a description of the relationship of the DPL to the CPL of the executing code segment and the RPL of a segment selector.

P (segment-present) flag
Indicates whether the segment is present in memory (set) or not present (clear). If this flag is clear, the processor generates a segment-not-present exception (#NP) when a segment selector that points to the segment descriptor is loaded into a segment register. Memory management software can use this flag to control which segments are actually loaded into physical memory at a given time. It offers a control in addition to paging for managing virtual memory.

Figure 3-9 shows the format of a segment descriptor when the segment-present flag is clear. When this flag is clear, the operating system or executive is free to use the locations marked "Available" to store its own data, such as information regarding the whereabouts of the missing segment.

D/B (default operation size/default stack pointer size and/or upper bound) flag
Performs different functions depending on whether the segment descriptor is an executable code segment, an expand-down data segment, or a stack segment. (This flag should always be set to 1 for 32-bit code and data segments and to 0 for 16-bit code and data segments.)

- **Executable code segment.** The flag is called the D flag and it indicates the default length for effective addresses and operands referenced by instructions in the segment. If the flag is set, 32-bit addresses and 32-bit or 8-bit operands are assumed; if it is clear, 16-bit addresses and 16-bit or 8-bit operands are assumed.
  The instruction prefix 66H can be used to select an operand size other than the default, and the prefix 67H can be used select an address size other than the default.
- **Stack segment (data segment pointed to by the SS register).** The flag is called the B (big) flag and it specifies the size of the stack pointer used for implicit stack operations (such as pushes, pops, and calls). If the flag is set, a 32-bit stack pointer is used, which is stored in the 32-bit ESP register; if the flag is clear, a 16-bit stack pointer is used, which is stored in the 16-bit SP register. If the stack segment is set up to be an expand-down data segment (described in the next paragraph), the B flag also specifies the upper bound of the stack segment.
- **Expand-down data segment.** The flag is called the B flag and it specifies the upper bound of the segment. If the flag is set, the upper bound is FFFFFFFFH (4 GBytes); if the flag is clear, the upper bound is FFFFH (64 KBytes).

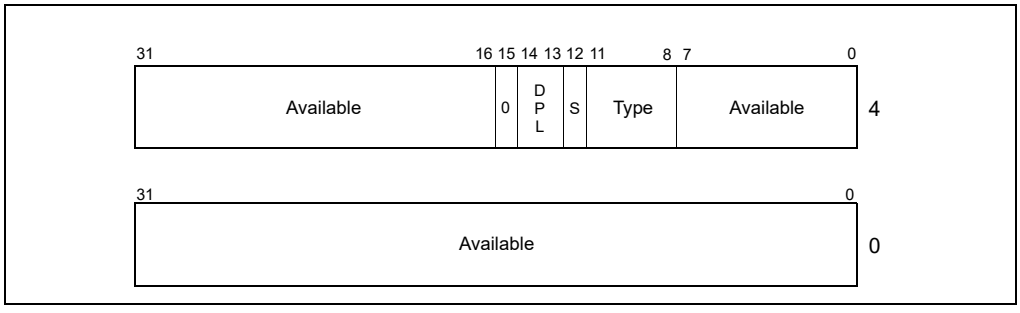

Figure 3-9. Segment Descriptor When Segment-Present Flag Is Clear

G (granularity) flag
Determines the scaling of the segment limit field. When the granularity flag is clear, the segment limit is interpreted in byte units; when flag is set, the segment limit is interpreted in 4-KByte units. (This flag does not affect the granularity of the base address; it is always byte granular.) When the granularity flag is set, the twelve least significant bits of an offset are not tested when checking the

offset against the segment limit. For example, when the granularity flag is set, a limit of 0 results in valid offsets from 0 to 4095.

L (64-bit code segment) flag

In IA-32e mode, bit 21 of the second doubleword of the segment descriptor indicates whether a code segment contains native 64-bit code. A value of 1 indicates instructions in this code segment are executed in 64-bit mode. A value of 0 indicates the instructions in this code segment are executed in compatibility mode. If L-bit is set, then D-bit must be cleared. When not in IA-32e mode or for non-code segments, bit 21 is reserved and should always be set to 0.

Available and reserved bits

Bit 20 of the second doubleword of the segment descriptor is available for use by system software.

3.4.5.1 Code- and Data-Segment Descriptor Types

When the S (descriptor type) flag in a segment descriptor is set, the descriptor is for either a code or a data segment. The highest order bit of the type field (bit 11 of the second double word of the segment descriptor) then determines whether the descriptor is for a data segment (clear) or a code segment (set).

For data segments, the three low-order bits of the type field (bits 8, 9, and 10) are interpreted as accessed (A), write-enable (W), and expansion-direction (E). See Table 3-1 for a description of the encoding of the bits in the type field for code and data segments. Data segments can be read-only or read/write segments, depending on the setting of the write-enable bit.

Table 3-1. Code- and Data-Segment Types

Type Field					Descriptor Type	Description
Decimal	11	10 E	9 W	8 A		
0	0	0	0	0	Data	Read-Only
1	0	0	0	1	Data	Read-Only, accessed
2	0	0	1	0	Data	Read/Write
3	0	0	1	1	Data	Read/Write, accessed
4	0	1	0	0	Data	Read-Only, expand-down
5	0	1	0	1	Data	Read-Only, expand-down, accessed
6	0	1	1	0	Data	Read/Write, expand-down
7	0	1	1	1	Data	Read/Write, expand-down, accessed
		C	R	A		
8	1	0	0	0	Code	Execute-Only
9	1	0	0	1	Code	Execute-Only, accessed
10	1	0	1	0	Code	Execute/Read
11	1	0	1	1	Code	Execute/Read, accessed
12	1	1	0	0	Code	Execute-Only, conforming
13	1	1	0	1	Code	Execute-Only, conforming, accessed
14	1	1	1	0	Code	Execute/Read, conforming
15	1	1	1	1	Code	Execute/Read, conforming, accessed

Stack segments are data segments which must be read/write segments. Loading the SS register with a segment selector for a nonwritable data segment generates a general-protection exception (#GP). If the size of a stack segment needs to be changed dynamically, the stack segment can be an expand-down data segment (expansion-direction flag set). Here, dynamically changing the segment limit causes stack space to be added to the bottom of

the stack. If the size of a stack segment is intended to remain static, the stack segment may be either an expand-up or expand-down type.

The accessed bit indicates whether the segment has been accessed since the last time the operating-system or executive cleared the bit. The processor sets this bit whenever it loads a segment selector for the segment into a segment register, assuming that the type of memory that contains the segment descriptor supports processor writes. The bit remains set until explicitly cleared. This bit can be used both for virtual memory management and for debugging.

For code segments, the three low-order bits of the type field are interpreted as accessed (A), read enable (R), and conforming (C). Code segments can be execute-only or execute/read, depending on the setting of the read-enable bit. An execute/read segment might be used when constants or other static data have been placed with instruction code in a ROM. Here, data can be read from the code segment either by using an instruction with a CS override prefix or by loading a segment selector for the code segment in a data-segment register (the DS, ES, FS, or GS registers). In protected mode, code segments are not writable.

Code segments can be either conforming or nonconforming. A transfer of execution into a more-privileged conforming segment allows execution to continue at the current privilege level. A transfer into a nonconforming segment at a different privilege level results in a general-protection exception (#GP), unless a call gate or task gate is used (see Section 5.8.1, "Direct Calls or Jumps to Code Segments," for more information on conforming and nonconforming code segments). System utilities that do not access protected facilities and handlers for some types of exceptions (such as, divide error or overflow) may be loaded in conforming code segments. Utilities that need to be protected from less privileged programs and procedures should be placed in nonconforming code segments.

NOTE

Execution cannot be transferred by a call or a jump to a less-privileged (numerically higher privilege level) code segment, regardless of whether the target segment is a conforming or nonconforming code segment. Attempting such an execution transfer will result in a general-protection exception.

All data segments are nonconforming, meaning that they cannot be accessed by less privileged programs or procedures (code executing at numerically higher privilege levels). Unlike code segments, however, data segments can be accessed by more privileged programs or procedures (code executing at numerically lower privilege levels) without using a special access gate.

If the segment descriptors in the GDT or an LDT are placed in ROM, the processor can enter an indefinite loop if software or the processor attempts to update (write to) the ROM-based segment descriptors. To prevent this problem, set the accessed bits for all segment descriptors placed in a ROM. Also, remove operating-system or executive code that attempts to modify segment descriptors located in ROM.

3.5 SYSTEM DESCRIPTOR TYPES

When the S (descriptor type) flag in a segment descriptor is clear, the descriptor type is a system descriptor. The processor recognizes the following types of system descriptors:

- Local descriptor-table (LDT) segment descriptor.
- Task-state segment (TSS) descriptor.
- Call-gate descriptor.
- Interrupt-gate descriptor.
- Trap-gate descriptor.
- Task-gate descriptor.

These descriptor types fall into two categories: system-segment descriptors and gate descriptors. System-segment descriptors point to system segments (LDT and TSS segments). Gate descriptors are in themselves "gates," which hold pointers to procedure entry points in code segments (call, interrupt, and trap gates) or which hold segment selectors for TSS's (task gates).

Table 3-2 shows the encoding of the type field for system-segment descriptors and gate descriptors. Note that system descriptors in IA-32e mode are 16 bytes instead of 8 bytes.

Table 3-2. System-Segment and Gate-Descriptor Types

Type Field					Description	
Decimal	11	10	9	8	32-Bit Mode	IA-32e Mode
0	0	0	0	0	Reserved	Reserved
1	0	0	0	1	16-bit TSS (Available)	Reserved
2	0	0	1	0	LDT	LDT
3	0	0	1	1	16-bit TSS (Busy)	Reserved
4	0	1	0	0	16-bit Call Gate	Reserved
5	0	1	0	1	Task Gate	Reserved
6	0	1	1	0	16-bit Interrupt Gate	Reserved
7	0	1	1	1	16-bit Trap Gate	Reserved
8	1	0	0	0	Reserved	Reserved
9	1	0	0	1	32-bit TSS (Available)	64-bit TSS (Available)
10	1	0	1	0	Reserved	Reserved
11	1	0	1	1	32-bit TSS (Busy)	64-bit TSS (Busy)
12	1	1	0	0	32-bit Call Gate	64-bit Call Gate
13	1	1	0	1	Reserved	Reserved
14	1	1	1	0	32-bit Interrupt Gate	64-bit Interrupt Gate
15	1	1	1	1	32-bit Trap Gate	64-bit Trap Gate

See also: Section 3.5.1, “Segment Descriptor Tables,” and Section 8.2.2, “TSS Descriptor” (for more information on the system-segment descriptors); see Section 5.8.3, “Call Gates”, Section 6.11, “IDT Descriptors”, and Section 8.2.5, “Task-Gate Descriptor” (for more information on the gate descriptors).

3.5.1 Segment Descriptor Tables

A segment descriptor table is an array of segment descriptors (see Figure 3-10). A descriptor table is variable in length and can contain up to 8192 (2^{13}) 8-byte descriptors. There are two kinds of descriptor tables:

- The global descriptor table (GDT)
- The local descriptor tables (LDT)

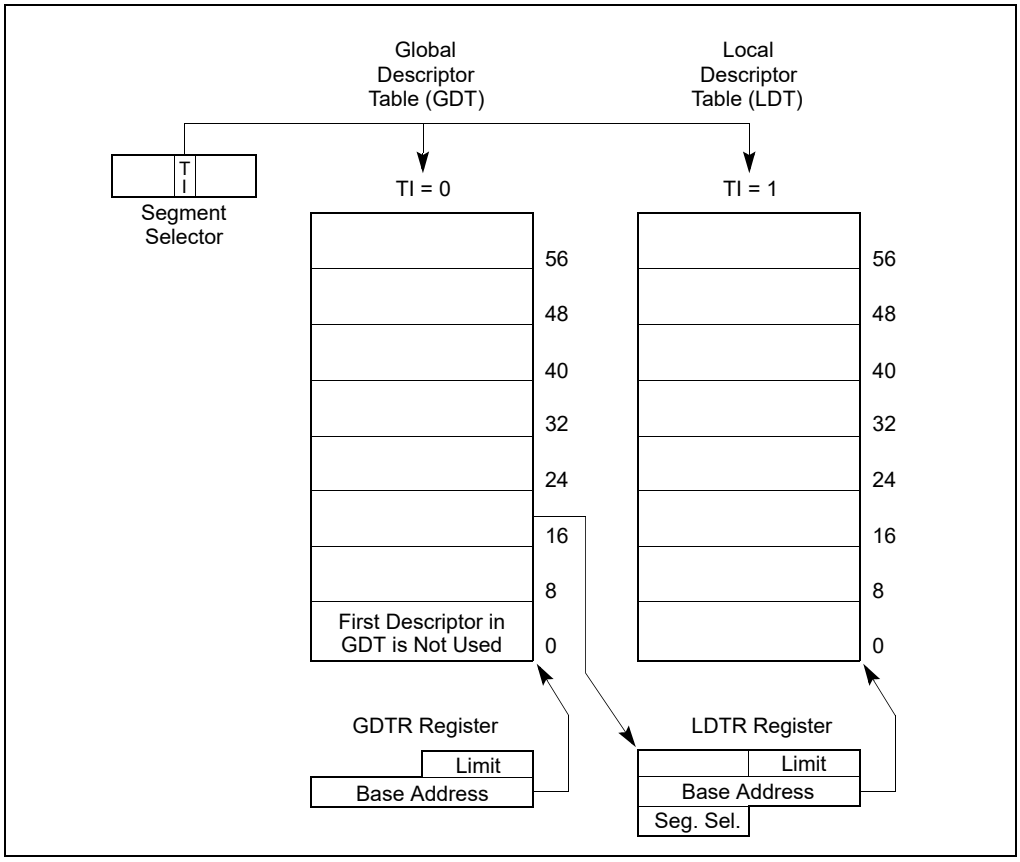

Figure 3-10. Global and Local Descriptor Tables

Each system must have one GDT defined, which may be used for all programs and tasks in the system. Optionally, one or more LDTs can be defined. For example, an LDT can be defined for each separate task being run, or some or all tasks can share the same LDT.

The GDT is not a segment itself; instead, it is a data structure in linear address space. The base linear address and limit of the GDT must be loaded into the GDTR register (see Section 2.4, "Memory-Management Registers"). The base address of the GDT should be aligned on an eight-byte boundary to yield the best processor performance. The limit value for the GDT is expressed in bytes. As with segments, the limit value is added to the base address to get the address of the last valid byte. A limit value of 0 results in exactly one valid byte. Because segment descriptors are always 8 bytes long, the GDT limit should always be one less than an integral multiple of eight (that is, 8N – 1).

The first descriptor in the GDT is not used by the processor. A segment selector to this "null descriptor" does not generate an exception when loaded into a data-segment register (DS, ES, FS, or GS), but it always generates a general-protection exception (#GP) when an attempt is made to access memory using the descriptor. By initializing the segment registers with this segment selector, accidental reference to unused segment registers can be guaranteed to generate an exception.

The LDT is located in a system segment of the LDT type. The GDT must contain a segment descriptor for the LDT segment. If the system supports multiple LDTs, each must have a separate segment selector and segment descriptor in the GDT. The segment descriptor for an LDT can be located anywhere in the GDT. See Section 3.5, "System Descriptor Types", for information on the LDT segment-descriptor type.

An LDT is accessed with its segment selector. To eliminate address translations when accessing the LDT, the segment selector, base linear address, limit, and access rights of the LDT are stored in the LDTR register (see Section 2.4, "Memory-Management Registers").

When the GDTR register is stored (using the SGDT instruction), a 48-bit "pseudo-descriptor" is stored in memory (see top diagram in Figure 3-11). To avoid alignment check faults in user mode (privilege level 3), the pseudo-descriptor should be located at an odd word address (that is, address MOD 4 is equal to 2). This causes the

processor to store an aligned word, followed by an aligned doubleword. User-mode programs normally do not store pseudo-descriptors, but the possibility of generating an alignment check fault can be avoided by aligning pseudo-descriptors in this way. The same alignment should be used when storing the IDTR register using the SIDT instruction. When storing the LDTR or task register (using the SLDT or STR instruction, respectively), the pseudo-descriptor should be located at a doubleword address (that is, address MOD 4 is equal to 0).

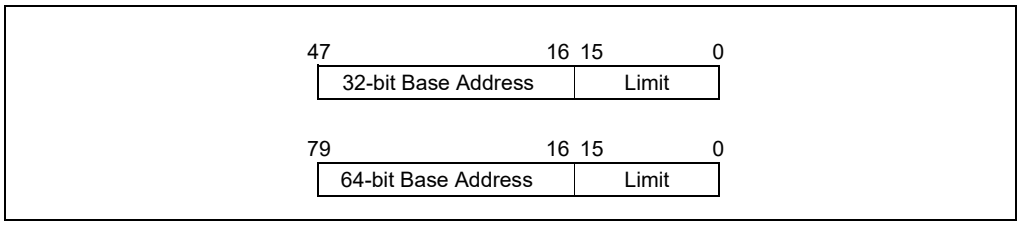

Figure 3-11. Pseudo-Descriptor Formats

3.5.2 Segment Descriptor Tables in IA-32e Mode

In IA-32e mode, a segment descriptor table can contain up to 8192 (2^{13}) 8-byte descriptors. An entry in the segment descriptor table can be 8 bytes. System descriptors are expanded to 16 bytes (occupying the space of two entries).

GDTR and LDTR registers are expanded to hold 64-bit base address. The corresponding pseudo-descriptor is 80 bits. (see the bottom diagram in Figure 3-11).

The following system descriptors expand to 16 bytes:

- Call gate descriptors (see Section 5.8.3.1, “IA-32e Mode Call Gates”).
- IDT gate descriptors (see Section 6.14.1, “64-Bit Mode IDT”).
- LDT and TSS descriptors (see Section 8.2.3, “TSS Descriptor in 64-bit mode”).

CHAPTER 4
PAGING

Chapter 3 explains how segmentation converts logical addresses to linear addresses. **Paging** (or linear-address translation) is the process of translating linear addresses so that they can be used to access memory or I/O devices. Paging translates each linear address to a **physical address** and determines, for each translation, what accesses to the linear address are allowed (the address's **access rights**) and the type of caching used for such accesses (the address's **memory type**).

Intel-64 processors support four different paging modes. These modes are identified and defined in Section 4.1. Section 4.2 gives an overview of the translation mechanism that is used in all modes. Section 4.3, Section 4.4, and Section 4.5 discuss the four paging modes in detail.

Section 4.6 details how paging determines and uses access rights. Section 4.7 discusses exceptions that may be generated by paging (page-fault exceptions). Section 4.8 considers data which the processor writes in response to linear-address accesses (accessed and dirty flags).

Section 4.9 describes how paging determines the memory types used for accesses to linear addresses. Section 4.10 provides details of how a processor may cache information about linear-address translation. Section 4.11 outlines interactions between paging and certain VMX features. Section 4.12 gives an overview of how paging can be used to implement virtual memory.

4.1 PAGING MODES AND CONTROL BITS

Paging behavior is controlled by the following control bits:

- The WP and PG flags in control register CR0 (bit 16 and bit 31, respectively).
- The PSE, PAE, PGE, LA57, PCIDE, SMEP, SMAP, PKE, CET, and PKS flags in control register CR4 (bit 4, bit 5, bit 7, bit 12, bit 17, bit 20, bit 21, bit 22, bit 23, and bit 24, respectively).
- The LME and NXE flags in the IA32_EFER MSR (bit 8 and bit 11, respectively).
- The AC flag in the EFLAGS register (bit 18).
- The "enable HLAT" VM-execution control (tertiary processor-based VM-execution control bit 1; see Section 25.6.2, "Processor-Based VM-Execution Controls," in the *Intel® 64 and IA-32 Architectures Software Developer's Manual, Volume 3C*).

Software enables paging by using the MOV to CR0 instruction to set CR0.PG. Before doing so, software should ensure that control register CR3 contains the physical address of the first paging structure that the processor will use for linear-address translation (see Section 4.2) and that that structure is initialized as desired. See Table 4-3, Table 4-7, and Table 4-12 for the use of CR3 in the different paging modes.

Section 4.1.1 describes how the values of CR0.PG, CR4.PAE, CR4.LA57, and IA32_EFER.LME determine whether paging is enabled and, if so, which of four paging modes is in use. Section 4.1.2 explains how to manage these bits to establish or make changes in paging modes. Section 4.1.3 discusses how CR0.WP, CR4.PSE, CR4.PGE, CR4.PCIDE, CR4.SMEP, CR4.SMAP, CR4.PKE, CR4.CET, CR4.PKS, and IA32_EFER.NXE modify the operation of the different paging modes.

4.1.1 Four Paging Modes

If CR0.PG = 0, paging is not used. The logical processor treats all linear addresses as if they were physical addresses. CR4.PAE, CR4.LA57, and IA32_EFER.LME are ignored by the processor, as are CR0.WP, CR4.PSE, CR4.PGE, CR4.SMEP, CR4.SMAP, and IA32_EFER.NXE. (CR4.CET is also ignored insofar as it affects linear-address access rights.)

Paging is enabled if CR0.PG = 1. Paging can be enabled only if protection is enabled (CR0.PE = 1). If paging is enabled, one of four paging modes is used. The values of CR4.PAE, CR4.LA57, and IA32_EFER.LME determine which paging mode is used:

- If CR4.PAE = 0, **32-bit paging** is used. 32-bit paging is detailed in Section 4.3. 32-bit paging uses CR0.WP, CR4.PSE, CR4.PGE, CR4.SMEP, CR4.SMAP, and CR4.CET as described in Section 4.1.3 and Section 4.6.
- If CR4.PAE = 1 and IA32_EFER.LME = 0, **PAE paging** is used. PAE paging is detailed in Section 4.4. PAE paging uses CR0.WP, CR4.PGE, CR4.SMEP, CR4.SMAP, CR4.CET, and IA32_EFER.NXE as described in Section 4.1.3 and Section 4.6.
- If CR4.PAE = 1, IA32_EFER.LME = 1, and CR4.LA57 = 0, **4-level paging**[1] is used.[2] 4-level paging is detailed in Section 4.5 (along with 5-level paging). 4-level paging uses CR0.WP, CR4.PGE, CR4.PCIDE, CR4.SMEP, CR4.SMAP, CR4.PKE, CR4.CET, CR4.PKS, and IA32_EFER.NXE as described in Section 4.1.3 and Section 4.6.
- If CR4.PAE = 1, IA32_EFER.LME = 1, and CR4.LA57 = 1, **5-level paging** is used. 5-level paging is detailed in Section 4.5 (along with 4-level paging). 5-level paging uses CR0.WP, CR4.PGE, CR4.PCIDE, CR4.SMEP, CR4.SMAP, CR4.PKE, CR4.CET, CR4.PKS, and IA32_EFER.NXE as described in Section 4.1.3 and Section 4.6.

NOTE

32-bit paging and PAE paging can be used only in legacy protected mode (IA32_EFER.LME = 0). In contrast, 4-level paging and 5-level paging can be used only IA-32e mode (IA32_EFER.LME = 1).

The four paging modes differ with regard to the following details:

- Linear-address width. The size of the linear addresses that can be translated.
- Physical-address width. The size of the physical addresses produced by paging.
- Page size. The granularity at which linear addresses are translated. Linear addresses on the same page are translated to corresponding physical addresses on the same page.
- Support for execute-disable access rights. In some paging modes, software can be prevented from fetching instructions from pages that are otherwise readable.
- Support for PCIDs. With 4-level paging and 5-level paging, software can enable a facility by which a logical processor caches information for multiple linear-address spaces. The processor may retain cached information when software switches between different linear-address spaces.
- Support for protection keys. With 4-level paging and 5-level paging, each linear address is associated with a **protection key**. Software can use the protection-key rights registers to disable, for each protection key, how certain accesses to linear addresses associated with that protection key.

Table 4-1 illustrates the principal differences between the four paging modes.

Table 4-1. Properties of Different Paging Modes

Paging Mode	PG in CR0	PAE in CR4	LME in IA32_EFER	LA57 in CR4	Lin.-Addr. Width	Phys.-Addr. Width[1]	Page Sizes	Supports Execute-Disable?	Supports PCIDs and protection keys?
None	0	N/A	N/A	N/A	32	32	N/A	No	No
32-bit	1	0	0[2]	N/A	32	Up to 40[3]	4 KB 4 MB[4]	No	No
PAE	1	1	0	N/A	32	Up to 52	4 KB 2 MB	Yes[5]	No
4-level	1	1	1	0	48	Up to 52	4 KB 2 MB 1 GB[6]	Yes[5]	Yes[7]

1. Earlier versions of this manual used the term "IA-32e paging" to identify 4-level paging.
2. The LMA flag in the IA32_EFER MSR (bit 10) is a status bit that indicates whether the logical processor is in IA-32e mode (and thus uses either 4-level paging or 5-level paging). The processor always sets IA32_EFER.LMA to CR0.PG & IA32_EFER.LME. Software cannot directly modify IA32_EFER.LMA; an execution of WRMSR to the IA32_EFER MSR ignores bit 10 of its source operand.

Table 4-1. Properties of Different Paging Modes (Contd.)

Paging Mode	PG in CR0	PAE in CR4	LME in IA32_EFER	LA57 in CR4	Lin.-Addr. Width	Phys.-Addr. Width[1]	Page Sizes	Supports Execute-Disable?	Supports PCIDs and protection keys?
5-level	1	1	1	1	57	Up to 52	4 KB 2 MB 1 GB[6]	Yes[5]	Yes[7]

NOTES:

1. The physical-address width is always bounded by MAXPHYADDR; see Section 4.1.4.
2. The processor ensures that IA32_EFER.LME must be 0 if CR0.PG = 1 and CR4.PAE = 0.
3. 32-bit paging supports physical-address widths of more than 32 bits only for 4-MByte pages and only if the PSE-36 mechanism is supported; see Section 4.1.4 and Section 4.3.
4. 32-bit paging uses 4-MByte pages only if CR4.PSE = 1; see Section 4.3.
5. Execute-disable access rights are applied only if IA32_EFER.NXE = 1; see Section 4.6.
6. Processors that support 4-level paging or 5-level paging do not necessarily support 1-GByte pages; see Section 4.1.4.
7. PCIDs are used only if CR4.PCIDE = 1; see Section 4.10.1. Protection keys are used only if certain conditions hold; see Section 4.6.2.

Because 32-bit paging and PAE paging are used only in legacy protected mode and because legacy protected mode cannot produce linear addresses larger than 32 bits, 32-bit paging and PAE paging translate 32-bit linear addresses.

4-level paging and 5-level paging are used only in IA-32e mode. IA-32e mode has two sub-modes:

- Compatibility mode. This sub-mode uses only 32-bit linear addresses. In this sub-mode, 4-level paging and 5-level paging treat bits 63:32 of such an address as all 0.
- 64-bit mode. While this sub-mode produces 64-bit linear addresses, the processor enforces **canonicality**, meaning that the upper bits of such an address are identical: bits 63:47 for 4-level paging and bits 63:56 for 5-level paging. 4-level paging (respectively, 5-level paging) does not use bits 63:48 (respectively, bits 63:57) of such addresses.

4.1.2 Paging-Mode Enabling

If CR0.PG = 1, a logical processor is in one of four paging modes, depending on the values of CR4.PAE, IA32_EFER.LME, and CR4.LA57. Figure 4-1 illustrates how software can enable these modes and make transitions between them. The following items identify certain limitations and other details:

- IA32_EFER.LME cannot be modified while paging is enabled (CR0.PG = 1). Attempts to do so using WRMSR cause a general-protection exception (#GP(0)).
- Paging cannot be enabled (by setting CR0.PG to 1) while CR4.PAE = 0 and IA32_EFER.LME = 1. Attempts to do so using MOV to CR0 cause a general-protection exception (#GP(0)).
- One node in Figure 4-1 is labeled "IA-32e mode." This node represents either 4-level paging (if CR4.LA57 = 0) or 5-level paging (if CR4.LA57 = 1). As noted in the following items, software cannot modify CR4.LA57 (effecting transition between 4-level paging and 5-level paging) without first disabling paging.
- CR4.PAE and CR4.LA57 cannot be modified while either 4-level paging or 5-level paging is in use (when CR0.PG = 1 and IA32_EFER.LME = 1). Attempts to do so using MOV to CR4 cause a general-protection exception (#GP(0)).
- Regardless of the current paging mode, software can disable paging by clearing CR0.PG with MOV to CR0.[1]
- Software can transition between 32-bit paging and PAE paging by changing the value of CR4.PAE with MOV to CR4.

1. If the logical processor is in 64-bit mode or if CR4.PCIDE = 1, an attempt to clear CR0.PG causes a general-protection exception (#GP). Software should transition to compatibility mode and clear CR4.PCIDE before attempting to disable paging.

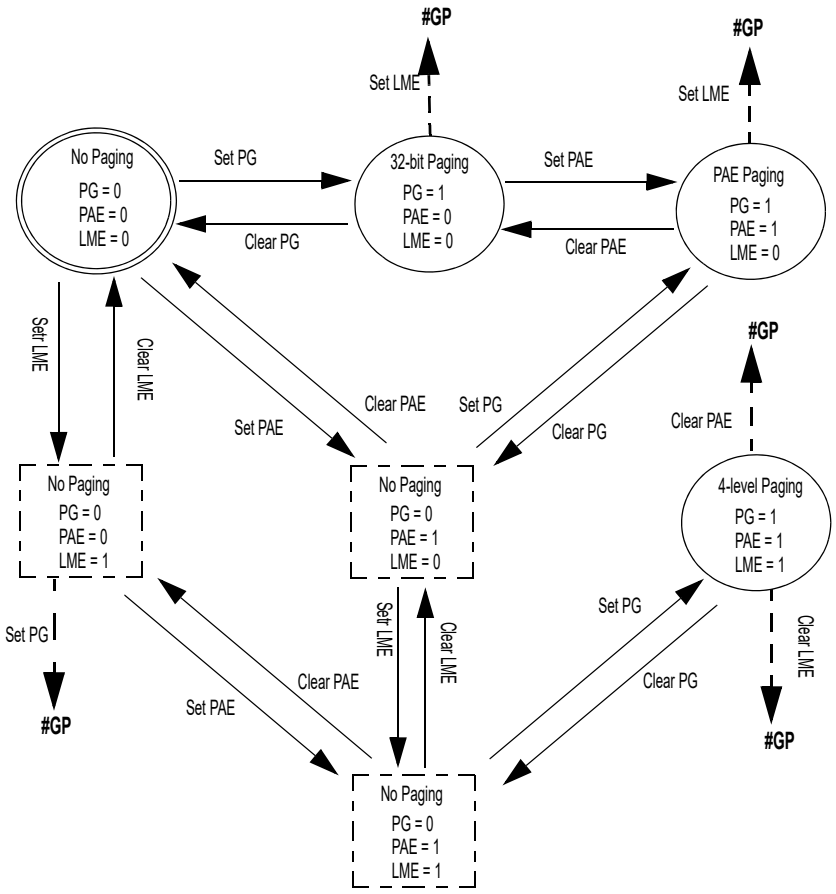

Figure 4-1. Enabling and Changing Paging Modes

- Software cannot transition directly between 4-level paging (or 5-level paging) and any of other paging mode. It must first disable paging (by clearing CR0.PG with MOV to CR0), then set CR4.PAE, IA32_EFER.LME, and CR4.LA57 to the desired values (with MOV to CR4 and WRMSR), and then re-enable paging (by setting CR0.PG with MOV to CR0). As noted earlier, an attempt to modify CR4.PAE, IA32_EFER.LME, or CR.LA57 while 4-level paging or 5-level paging is enabled causes a general-protection exception (#GP(0)).
- VMX transitions allow transitions between paging modes that are not possible using MOV to CR or WRMSR. This is because VMX transitions can load CR0, CR4, and IA32_EFER in one operation. See Section 4.11.1.

4.1.3 Paging-Mode Modifiers

Details of how each paging mode operates are determined by the following control bits:

- The WP flag in CR0 (bit 16).
- The PSE, PGE, PCIDE, SMEP, SMAP, PKE, CET, and PKS flags in CR4 (bit 4, bit 7, bit 17, bit 20, bit 21, bit 22, bit 23, and bit 24, respectively).
- The NXE flag in the IA32_EFER MSR (bit 11).
- The "enable HLAT" VM-execution control (tertiary processor-based VM-execution control bit 1).

CR0.WP allows pages to be protected from supervisor-mode writes. If CR0.WP = 0, supervisor-mode write accesses are allowed to linear addresses with read-only access rights; if CR0.WP = 1, they are not. (User-mode write accesses are never allowed to linear addresses with read-only access rights, regardless of the value of

CR0.WP.) Section 4.6 explains how access rights are determined, including the definition of supervisor-mode and user-mode accesses.

CR4.PSE enables 4-MByte pages for 32-bit paging. If CR4.PSE = 0, 32-bit paging can use only 4-KByte pages; if CR4.PSE = 1, 32-bit paging can use both 4-KByte pages and 4-MByte pages. See Section 4.3 for more information. (PAE paging, 4-level paging, and 5-level paging can use multiple page sizes regardless of the value of CR4.PSE.)

CR4.PGE enables global pages. If CR4.PGE = 0, no translations are shared across address spaces; if CR4.PGE = 1, specified translations may be shared across address spaces. See Section 4.10.2.4 for more information.

CR4.PCIDE enables process-context identifiers (PCIDs) for 4-level paging and 5-level paging. PCIDs allow a logical processor to cache information for multiple linear-address spaces. See Section 4.10.1 for more information.

CR4.SMEP allows pages to be protected from supervisor-mode instruction fetches. If CR4.SMEP = 1, software operating in supervisor mode cannot fetch instructions from linear addresses that are accessible in user mode. Section 4.6 explains how access rights are determined, including the definition of supervisor-mode accesses and user-mode accessibility.

CR4.SMAP allows pages to be protected from supervisor-mode data accesses. If CR4.SMAP = 1, software operating in supervisor mode cannot access data at linear addresses that are accessible in user mode. Software can override this protection by setting EFLAGS.AC. Section 4.6 explains how access rights are determined, including the definition of supervisor-mode accesses and user-mode accessibility.

CR4.PKE and CR4.PKS enable specification of access rights based on **protection keys**. 4-level paging and 5-level paging associate each linear address with a protection key. When CR4.PKE = 1, the PKRU register specifies, for each protection key, whether user-mode linear addresses with that protection key can be read or written. When CR4.PKS = 1, the IA32_PKRS MSR does the same for supervisor-mode linear addresses. See Section 4.6 for more information.

CR4.CET enables **control-flow enforcement technology**, including the shadow-stack feature. If CR4.CET = 1, certain memory accesses are identified as **shadow-stack accesses** and certain linear addresses translate to **shadow-stack pages**. Section 4.6 explains how access rights are determined for these accesses and pages. (The processor allows CR4.CET to be set only if CR0.WP is also set.)

IA32_EFER.NXE enables execute-disable access rights for PAE paging, 4-level paging, and 5-level paging. If IA32_EFER.NXE = 1, instruction fetches can be prevented from specified linear addresses (even if data reads from the addresses are allowed). Section 4.6 explains how access rights are determined. (IA32_EFER.NXE has no effect with 32-bit paging. Software that wants to use this feature to limit instruction fetches from readable pages must use PAE paging, 4-level paging, or 5-level paging.)

The "enable HLAT" VM-execution control enables **HLAT paging** for 4-level paging and 5-level paging. HLAT paging does not use control register CR3 to identify the address of the first paging structure used for linear-address translation; instead, that structure is located using a field in the virtual-machine control structure (VMCS). In addition, HLAT paging interprets certain bits in paging-structure entries differently than ordinary paging. See Section 4.5 for details.

4.1.4 Enumeration of Paging Features by CPUID

Software can discover support for different paging features using the CPUID instruction:

- PSE: page-size extensions for 32-bit paging.
  If CPUID.01H:EDX.PSE [bit 3] = 1, CR4.PSE may be set to 1, enabling support for 4-MByte pages with 32-bit paging (see Section 4.3).
- PAE: physical-address extension.
  If CPUID.01H:EDX.PAE [bit 6] = 1, CR4.PAE may be set to 1, enabling PAE paging (this setting is also required for 4-level paging and 5-level paging).
- PGE: global-page support.
  If CPUID.01H:EDX.PGE [bit 13] = 1, CR4.PGE may be set to 1, enabling the global-page feature (see Section 4.10.2.4).
- PAT: page-attribute table.
  If CPUID.01H:EDX.PAT [bit 16] = 1, the 8-entry page-attribute table (PAT) is supported. When the PAT is

supported, three bits in certain paging-structure entries select a memory type (used to determine type of caching used) from the PAT (see Section 4.9.2).

- PSE-36: page-size extensions with 40-bit physical-address extension.
  If CPUID.01H:EDX.PSE-36 [bit 17] = 1, the PSE-36 mechanism is supported, indicating that translations using 4-MByte pages with 32-bit paging may produce physical addresses with up to 40 bits (see Section 4.3).
- PCID: process-context identifiers.
  If CPUID.01H:ECX.PCID [bit 17] = 1, CR4.PCIDE may be set to 1, enabling process-context identifiers (see Section 4.10.1).
- SMEP: supervisor-mode execution prevention.
  If CPUID.(EAX=07H,ECX=0H):EBX.SMEP [bit 7] = 1, CR4.SMEP may be set to 1, enabling supervisor-mode execution prevention (see Section 4.6).
- SMAP: supervisor-mode access prevention.
  If CPUID.(EAX=07H,ECX=0H):EBX.SMAP [bit 20] = 1, CR4.SMAP may be set to 1, enabling supervisor-mode access prevention (see Section 4.6).
- PKU: protection keys for user-mode pages.
  If CPUID.(EAX=07H,ECX=0H):ECX.PKU [bit 3] = 1, CR4.PKE may be set to 1, enabling protection keys for user-mode pages (see Section 4.6).
- OSPKE: enabling of protection keys for user-mode pages.
  CPUID.(EAX=07H,ECX=0H):ECX.OSPKE [bit 4] returns the value of CR4.PKE. Thus, protection keys for user-mode pages are enabled if this flag is 1 (see Section 4.6).
- CET: control-flow enforcement technology.
  If CPUID.(EAX=07H,ECX=0H):ECX.CET_SS [bit 7] = 1, CR4.CET may be set to 1, enabling shadow-stack pages (see Section 4.6).
- LA57: 57-bit linear addresses and 5-level paging.
  If CPUID.(EAX=07H,ECX=0):ECX.LA57 [bit 16] = 1, CR4.LA57 may be set to 1, enabling 5-level paging.
- PKS: protection keys for supervisor-mode pages.
  If CPUID.(EAX=07H,ECX=0H):ECX.PKS [bit 31] = 1, CR4.PKS may be set to 1, enabling protection keys for supervisor-mode pages (see Section 4.6).
- NX: execute disable.
  If CPUID.80000001H:EDX.NX [bit 20] = 1, IA32_EFER.NXE may be set to 1, allowing software to disable execute access to selected pages (see Section 4.6). (Processors that do not support CPUID function 80000001H do not allow IA32_EFER.NXE to be set to 1.)
- Page1GB: 1-GByte pages.
  If CPUID.80000001H:EDX.Page1GB [bit 26] = 1, 1-GByte pages may be supported with 4-level paging and 5-level paging (see Section 4.5).
- LM: IA-32e mode support.
  If CPUID.80000001H:EDX.LM [bit 29] = 1, IA32_EFER.LME may be set to 1, enabling IA-32e mode (with either 4-level paging or 5-level paging). (Processors that do not support CPUID function 80000001H do not allow IA32_EFER.LME to be set to 1.)
- CPUID.80000008H:EAX[7:0] reports the physical-address width supported by the processor. (For processors that do not support CPUID function 80000008H, the width is generally 36 if CPUID.01H:EDX.PAE [bit 6] = 1 and 32 otherwise.) This width is referred to as MAXPHYADDR. MAXPHYADDR is at most 52.
- CPUID.80000008H:EAX[15:8] reports the linear-address width supported by the processor. Generally, this value is reported as follows:
  - If CPUID.80000001H:EDX.LM [bit 29] = 0, the value is reported as 32.
  - If CPUID.80000001H:EDX.LM [bit 29] = 1 and CPUID.(EAX=07H,ECX=0):ECX.LA57 [bit 16] = 0, the value is reported as 48.
  - If CPUID.(EAX=07H,ECX=0):ECX.LA57 [bit 16] = 1, the value is reported as 57.

  (Processors that do not support CPUID function 80000008H, support a linear-address width of 32.)

4.2 HIERARCHICAL PAGING STRUCTURES: AN OVERVIEW

All four paging modes translate linear addresses using **hierarchical paging structures**. This section provides an overview of their operation. Section 4.3, Section 4.4, Section 4.5, and Section 4.6 provide details for the four paging modes.

Every paging structure is 4096 Bytes in size and comprises a number of individual **entries**. With 32-bit paging, each entry is 32 bits (4 bytes); there are thus 1024 entries in each structure. With the other paging modes, each entry is 64 bits (8 bytes); there are thus 512 entries in each structure. (PAE paging includes one exception, a paging structure that is 32 bytes in size, containing 4 64-bit entries.)

The processor uses the upper portion of a linear address to identify a series of paging-structure entries. The last of these entries identifies the physical address of the region to which the linear address translates (called the **page frame**). The lower portion of the linear address (called the **page offset**) identifies the specific address within that region to which the linear address translates.

Each paging-structure entry contains a physical address, which is either the address of another paging structure or the address of a page frame. In the first case, the entry is said to **reference** the other paging structure; in the latter, the entry is said to **map a page**.

The first paging structure used for any translation is located at the physical address in CR3.[1] A linear address is translated using the following iterative procedure. A portion of the linear address (initially the uppermost bits) selects an entry in a paging structure (initially the one located using CR3). If that entry references another paging structure, the process continues with that paging structure and with the portion of the linear address immediately below that just used. If instead the entry maps a page, the process completes: the physical address in the entry is that of the page frame and the remaining lower portion of the linear address is the page offset.

The following items give an example for each of the four paging modes (each example locates a 4-KByte page frame):

- With 32-bit paging, each paging structure comprises $1024 = 2^{10}$ entries. For this reason, the translation process uses 10 bits at a time from a 32-bit linear address. Bits 31:22 identify the first paging-structure entry and bits 21:12 identify a second. The latter identifies the page frame. Bits 11:0 of the linear address are the page offset within the 4-KByte page frame. (See Figure 4-2 for an illustration.)
- With PAE paging, the first paging structure comprises only $4 = 2^2$ entries. Translation thus begins by using bits 31:30 from a 32-bit linear address to identify the first paging-structure entry. Other paging structures comprise $512 = 2^9$ entries, so the process continues by using 9 bits at a time. Bits 29:21 identify a second paging-structure entry and bits 20:12 identify a third. This last identifies the page frame. (See Figure 4-5 for an illustration.)
- With 4-level paging, each paging structure comprises $512 = 2^9$ entries and translation uses 9 bits at a time from a 48-bit linear address. Bits 47:39 identify the first paging-structure entry, bits 38:30 identify a second, bits 29:21 a third, and bits 20:12 identify a fourth. Again, the last identifies the page frame. (See Figure 4-8 for an illustration.)
- 5-level paging is similar to 4-level paging except that 5-level paging translates 57-bit linear addresses. Bits 56:48 identify the first paging-structure entry, while the remaining bits are used as with 4-level paging.

The translation process in each of the examples above completes by identifying a page frame; the page frame is part of the **translation** of the original linear address. In some cases, however, the paging structures may be configured so that the translation process terminates before identifying a page frame. This occurs if the process encounters a paging-structure entry that is marked "not present" (because its P flag — bit 0 — is clear) or in which a reserved bit is set. In this case, there is no translation for the linear address; an access to that address causes a page-fault exception (see Section 4.7).

In the examples above, a paging-structure entry maps a page with a 4-KByte page frame when only 12 bits remain in the linear address; entries identified earlier always reference other paging structures. That may not apply in other cases. The following items identify when an entry maps a page and when it references another paging structure:

- If more than 12 bits remain in the linear address, bit 7 (PS — page size) of the current paging-structure entry is consulted. If the bit is 0, the entry references another paging structure; if the bit is 1, the entry maps a page.

1. If HLAT paging is in use, a different mechanism is used to identify the first paging structure. See Section 4.5 for more information.

- If only 12 bits remain in the linear address, the current paging-structure entry always maps a page (bit 7 is used for other purposes).

If a paging-structure entry maps a page when more than 12 bits remain in the linear address, the entry identifies a page frame larger than 4 KBytes. For example, 32-bit paging uses the upper 10 bits of a linear address to locate the first paging-structure entry; 22 bits remain. If that entry maps a page, the page frame is 2^{22} Bytes = 4 MBytes. 32-bit paging can use 4-MByte pages if CR4.PSE = 1. The other paging modes can use 2-MByte pages (regardless of the value of CR4.PSE). 4-level paging and 5-level paging can use 1-GByte pages if the processor supports them (see Section 4.1.4).

Paging structures are given different names based on their uses in the translation process. Table 4-2 gives the names of the different paging structures. It also provides, for each structure, the source of the physical address used to locate it (CR3 or a different paging-structure entry); the bits in the linear address used to select an entry from the structure; and details of whether and how such an entry can map a page.

Table 4-2. Paging Structures in the Different Paging Modes

Paging Structure	Entry Name	Paging Mode	Physical Address of Structure	Bits Selecting Entry	Page Mapping
PML5 table	PML5E	32-bit, PAE, 4-level	N/A		
		5-level	CR3[1]	56:48	N/A (PS must be 0)
PML4 table	PML4E	32-bit, PAE	N/A		
		4-level	CR3[1]	47:39	N/A (PS must be 0)
		5-level	PML5E		
Page-directory-pointer table	PDPTE	32-bit	N/A		
		PAE	CR3	31:30	N/A (PS must be 0)
		4-level, 5-level	PML4E	38:30	1-GByte page if PS=1[2]
Page directory	PDE	32-bit	CR3	31:22	4-MByte page if PS=1[3]
		PAE, 4-level, 5-level	PDPTE	29:21	2-MByte page if PS=1
Page table	PTE	32-bit	PDE	21:12	4-KByte page
		PAE, 4-level, 5-level		20:12	

NOTES:

1. If HLAT paging is in use, a different mechanism is used to identify the first paging structure. See Section 4.5 for more information.
2. Not all processors support 1-GByte pages; see Section 4.1.4.
3. 32-bit paging ignores the PS flag in a PDE (and uses the entry to reference a page table) unless CR4.PSE = 1. Not all processors support 4-MByte pages with 32-bit paging; see Section 4.1.4.

4.3 32-BIT PAGING

A logical processor uses 32-bit paging if CR0.PG = 1 and CR4.PAE = 0. 32-bit paging translates 32-bit linear addresses to 40-bit physical addresses.[1] Although 40 bits corresponds to 1 TByte, linear addresses are limited to 32 bits; at most 4 GBytes of linear-address space may be accessed at any given time.

32-bit paging uses a hierarchy of paging structures to produce a translation for a linear address. CR3 is used to locate the first paging-structure, the page directory. Table 4-3 illustrates how CR3 is used with 32-bit paging.

32-bit paging may map linear addresses to either 4-KByte pages or 4-MByte pages. Figure 4-2 illustrates the translation process when it uses a 4-KByte page; Figure 4-3 covers the case of a 4-MByte page. The following items describe the 32-bit paging process in more detail as well has how the page size is determined:

- A 4-KByte naturally aligned page directory is located at the physical address specified in bits 31:12 of CR3 (see Table 4-3). A page directory comprises 1024 32-bit entries (PDEs). A PDE is selected using the physical address defined as follows:
  - Bits 39:32 are all 0.
  - Bits 31:12 are from CR3.
  - Bits 11:2 are bits 31:22 of the linear address.
  - Bits 1:0 are 0.

Because a PDE is identified using bits 31:22 of the linear address, it controls access to a 4-Mbyte region of the linear-address space. Use of the PDE depends on CR4.PSE and the PDE's PS flag (bit 7):

- If CR4.PSE = 1 and the PDE's PS flag is 1, the PDE maps a 4-MByte page (see Table 4-4). The final physical address is computed as follows:
  - Bits 39:32 are bits 20:13 of the PDE.
  - Bits 31:22 are bits 31:22 of the PDE.[2]
  - Bits 21:0 are from the original linear address.
- If CR4.PSE = 0 or the PDE's PS flag is 0, a 4-KByte naturally aligned page table is located at the physical address specified in bits 31:12 of the PDE (see Table 4-5). A page table comprises 1024 32-bit entries (PTEs). A PTE is selected using the physical address defined as follows:
  - Bits 39:32 are all 0.
  - Bits 31:12 are from the PDE.
  - Bits 11:2 are bits 21:12 of the linear address.
  - Bits 1:0 are 0.
- Because a PTE is identified using bits 31:12 of the linear address, every PTE maps a 4-KByte page (see Table 4-6). The final physical address is computed as follows:
  - Bits 39:32 are all 0.
  - Bits 31:12 are from the PTE.
  - Bits 11:0 are from the original linear address.

If a paging-structure entry's P flag (bit 0) is 0 or if the entry sets any reserved bit, the entry is used neither to reference another paging-structure entry nor to map a page. There is no translation for a linear address whose translation would use such a paging-structure entry; a reference to such a linear address causes a page-fault exception (see Section 4.7).

---

1. Bits in the range 39:32 are 0 in any physical address used by 32-bit paging except those used to map 4-MByte pages. If the processor does not support the PSE-36 mechanism, this is true also for physical addresses used to map 4-MByte pages. If the processor does support the PSE-36 mechanism and MAXPHYADDR < 40, bits in the range 39:MAXPHYADDR are 0 in any physical address used to map a 4-MByte page. (The corresponding bits are reserved in PDEs.) See Section 4.1.4 for how to determine MAXPHYADDR and whether the PSE-36 mechanism is supported.
2. The upper bits in the final physical address do not all come from corresponding positions in the PDE; the physical-address bits in the PDE are not all contiguous.

With 32-bit paging, there are reserved bits only if CR4.PSE = 1:

- If the P flag and the PS flag (bit 7) of a PDE are both 1, the bits reserved depend on MAXPHYADDR, and whether the PSE-36 mechanism is supported:[1]
  - If the PSE-36 mechanism is not supported, bits 21:13 are reserved.
  - If the PSE-36 mechanism is supported, bits 21:(M–19) are reserved, where M is the minimum of 40 and MAXPHYADDR.
- If the PAT is not supported:[2]
  - If the P flag of a PTE is 1, bit 7 is reserved.
  - If the P flag and the PS flag of a PDE are both 1, bit 12 is reserved.

(If CR4.PSE = 0, no bits are reserved with 32-bit paging.)

A reference using a linear address that is successfully translated to a physical address is performed only if allowed by the access rights of the translation; see Section 4.6.

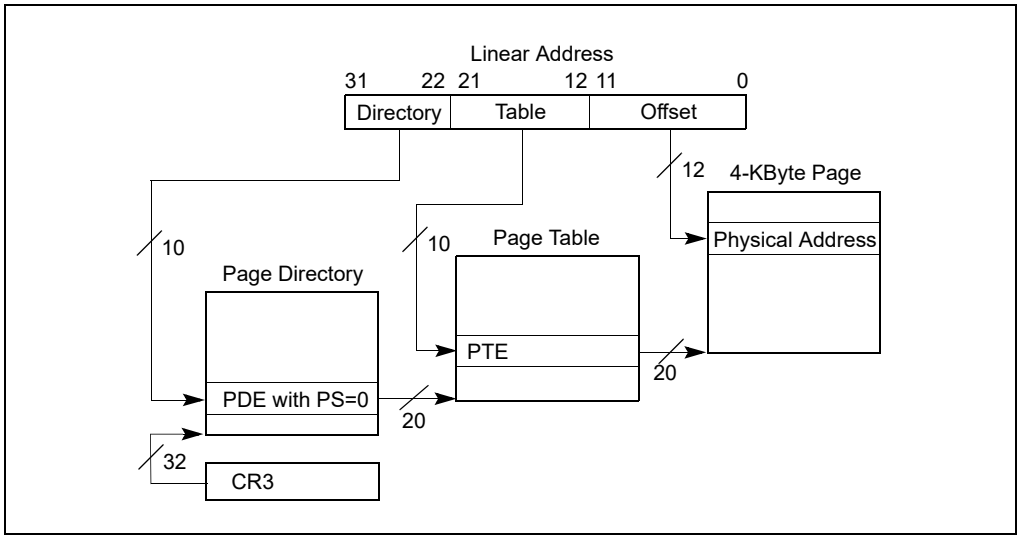

Figure 4-2. Linear-Address Translation to a 4-KByte Page using 32-Bit Paging

1. See Section 4.1.4 for how to determine MAXPHYADDR and whether the PSE-36 mechanism is supported.
2. See Section 4.1.4 for how to determine whether the PAT is supported.

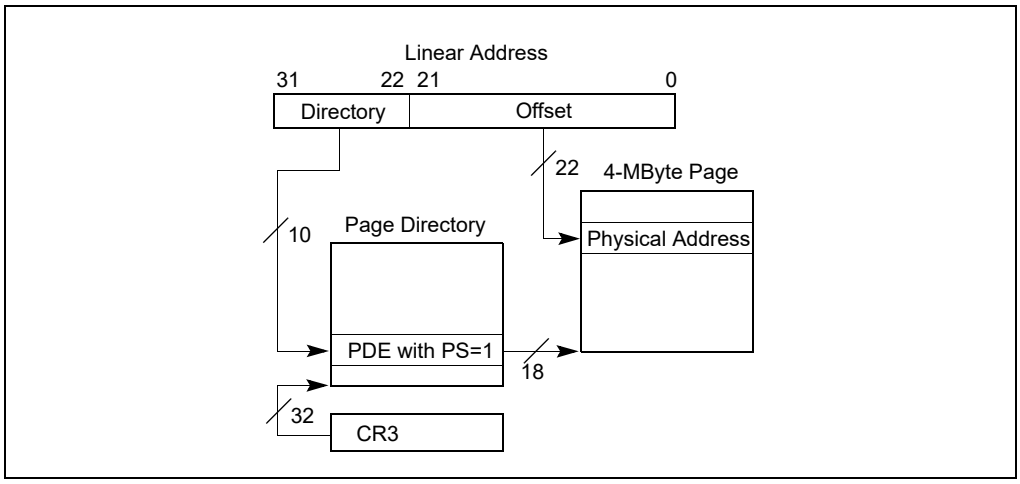

Figure 4-3. Linear-Address Translation to a 4-MByte Page using 32-Bit Paging

Figure 4-4 gives a summary of the formats of CR3 and the paging-structure entries with 32-bit paging. For the paging structure entries, it identifies separately the format of entries that map pages, those that reference other paging structures, and those that do neither because they are "not present"; bit 0 (P) and bit 7 (PS) are highlighted because they determine how such an entry is used.

31	30	29	28	27	26	25	24	23	22	21	20	19	18	17	16	15	14	13	12	11	10	9	8	7	6	5	4	3	2	1	0	
Address of page directory[1]																				Ignored							PCD	PWT	Ignored			**CR3**
Bits 31:22 of address of 4MB page frame										Reserved (must be 0)						Bits 39:32 of address[2]			PAT	Ignored			G	**1**	D	A	PCD	PWT	U/S	R/W	**1**	**PDE: 4MB page**
Address of page table																				Ignored				**0**	Ign	A	PCD	PWT	U/S	R/W	**1**	**PDE: page table**
Ignored																															**0**	**PDE: not present**
Address of 4KB page frame																				Ignored			G	PAT	D	A	PCD	PWT	U/S	R/W	**1**	**PTE: 4KB page**
Ignored																															**0**	**PTE: not present**

Figure 4-4. Formats of CR3 and Paging-Structure Entries with 32-Bit Paging

NOTES:

1. CR3 has 64 bits on processors supporting the Intel-64 architecture. These bits are ignored with 32-bit paging.
2. This example illustrates a processor in which MAXPHYADDR is 36. If this value is larger or smaller, the number of bits reserved in positions 20:13 of a PDE mapping a 4-MByte page will change.

Table 4-3. Use of CR3 with 32-Bit Paging

Bit Position(s)	Contents
2:0	Ignored
3 (PWT)	Page-level write-through; indirectly determines the memory type used to access the page directory during linear-address translation (see Section 4.9)
4 (PCD)	Page-level cache disable; indirectly determines the memory type used to access the page directory during linear-address translation (see Section 4.9)
11:5	Ignored
31:12	Physical address of the 4-KByte aligned page directory used for linear-address translation
63:32	Ignored (these bits exist only on processors supporting the Intel-64 architecture)

Table 4-4. Format of a 32-Bit Page-Directory Entry that Maps a 4-MByte Page

Bit Position(s)	Contents
0 (P)	Present; must be 1 to map a 4-MByte page
1 (R/W)	Read/write; if 0, writes may not be allowed to the 4-MByte page referenced by this entry (see Section 4.6)
2 (U/S)	User/supervisor; if 0, user-mode accesses are not allowed to the 4-MByte page referenced by this entry (see Section 4.6)
3 (PWT)	Page-level write-through; indirectly determines the memory type used to access the 4-MByte page referenced by this entry (see Section 4.9)
4 (PCD)	Page-level cache disable; indirectly determines the memory type used to access the 4-MByte page referenced by this entry (see Section 4.9)
5 (A)	Accessed; indicates whether software has accessed the 4-MByte page referenced by this entry (see Section 4.8)
6 (D)	Dirty; indicates whether software has written to the 4-MByte page referenced by this entry (see Section 4.8)
7 (PS)	Page size; must be 1 (otherwise, this entry references a page table; see Table 4-5)
8 (G)	Global; if CR4.PGE = 1, determines whether the translation is global (see Section 4.10); ignored otherwise
11:9	Ignored
12 (PAT)	If the PAT is supported, indirectly determines the memory type used to access the 4-MByte page referenced by this entry (see Section 4.9.2); otherwise, reserved (must be 0)[1]
(M–20):13	Bits (M–1):32 of physical address of the 4-MByte page referenced by this entry[2]
21:(M–19)	Reserved (must be 0)
31:22	Bits 31:22 of physical address of the 4-MByte page referenced by this entry

NOTES:

1. See Section 4.1.4 for how to determine whether the PAT is supported.
2. If the PSE-36 mechanism is not supported, M is 32, and this row does not apply. If the PSE-36 mechanism is supported, M is the minimum of 40 and MAXPHYADDR (this row does not apply if MAXPHYADDR = 32). See Section 4.1.4 for how to determine MAXPHYADDR and whether the PSE-36 mechanism is supported.

Table 4-5. Format of a 32-Bit Page-Directory Entry that References a Page Table

Bit Position(s)	Contents
0 (P)	Present; must be 1 to reference a page table
1 (R/W)	Read/write; if 0, writes may not be allowed to the 4-MByte region controlled by this entry (see Section 4.6)
2 (U/S)	User/supervisor; if 0, user-mode accesses are not allowed to the 4-MByte region controlled by this entry (see Section 4.6)
3 (PWT)	Page-level write-through; indirectly determines the memory type used to access the page table referenced by this entry (see Section 4.9)
4 (PCD)	Page-level cache disable; indirectly determines the memory type used to access the page table referenced by this entry (see Section 4.9)
5 (A)	Accessed; indicates whether this entry has been used for linear-address translation (see Section 4.8)
6	Ignored
7 (PS)	If CR4.PSE = 1, must be 0 (otherwise, this entry maps a 4-MByte page; see Table 4-4); otherwise, ignored
11:8	Ignored
31:12	Physical address of 4-KByte aligned page table referenced by this entry

Table 4-6. Format of a 32-Bit Page-Table Entry that Maps a 4-KByte Page

Bit Position(s)	Contents
0 (P)	Present; must be 1 to map a 4-KByte page
1 (R/W)	Read/write; if 0, writes may not be allowed to the 4-KByte page referenced by this entry (see Section 4.6)
2 (U/S)	User/supervisor; if 0, user-mode accesses are not allowed to the 4-KByte page referenced by this entry (see Section 4.6)
3 (PWT)	Page-level write-through; indirectly determines the memory type used to access the 4-KByte page referenced by this entry (see Section 4.9)
4 (PCD)	Page-level cache disable; indirectly determines the memory type used to access the 4-KByte page referenced by this entry (see Section 4.9)
5 (A)	Accessed; indicates whether software has accessed the 4-KByte page referenced by this entry (see Section 4.8)
6 (D)	Dirty; indicates whether software has written to the 4-KByte page referenced by this entry (see Section 4.8)
7 (PAT)	If the PAT is supported, indirectly determines the memory type used to access the 4-KByte page referenced by this entry (see Section 4.9.2); otherwise, reserved (must be 0)[1]
8 (G)	Global; if CR4.PGE = 1, determines whether the translation is global (see Section 4.10); ignored otherwise
11:9	Ignored
31:12	Physical address of the 4-KByte page referenced by this entry

NOTES:

1. See Section 4.1.4 for how to determine whether the PAT is supported.

4.4 PAE PAGING

A logical processor uses PAE paging if CR0.PG = 1, CR4.PAE = 1, and IA32_EFER.LME = 0. PAE paging translates 32-bit linear addresses to 52-bit physical addresses.[1] Although 52 bits corresponds to 4 PBytes, linear addresses are limited to 32 bits; at most 4 GBytes of linear-address space may be accessed at any given time.

With PAE paging, a logical processor maintains a set of four (4) PDPTE registers, which are loaded from an address in CR3. Linear address are translated using 4 hierarchies of in-memory paging structures, each located using one of the PDPTE registers. (This is different from the other paging modes, in which there is one hierarchy referenced by CR3.)

Section 4.4.1 discusses the PDPTE registers. Section 4.4.2 describes linear-address translation with PAE paging.

4.4.1 PDPTE Registers

When PAE paging is used, CR3 references the base of a 32-Byte **page-directory-pointer table**. Table 4-7 illustrates how CR3 is used with PAE paging.

Table 4-7. Use of CR3 with PAE Paging

Bit Position(s)	Contents
4:0	Ignored
31:5	Physical address of the 32-Byte aligned page-directory-pointer table used for linear-address translation
63:32	Ignored (these bits exist only on processors supporting the Intel-64 architecture)

The page-directory-pointer-table comprises four (4) 64-bit entries called PDPTEs. Each PDPTE controls access to a 1-GByte region of the linear-address space. Corresponding to the PDPTEs, the logical processor maintains a set of four (4) internal, non-architectural PDPTE registers, called PDPTE0, PDPTE1, PDPTE2, and PDPTE3. The logical processor loads these registers from the PDPTEs in memory as part of certain operations:

- If PAE paging would be in use following an execution of MOV to CR0 or MOV to CR4 (see Section 4.1.1) and the instruction is modifying any of CR0.CD, CR0.NW, CR0.PG, CR4.PAE, CR4.PGE, CR4.PSE, or CR4.SMEP; then the PDPTEs are loaded from the address in CR3.
- If MOV to CR3 is executed while the logical processor is using PAE paging, the PDPTEs are loaded from the address being loaded into CR3.
- If PAE paging is in use and a task switch changes the value of CR3, the PDPTEs are loaded from the address in the new CR3 value.
- Certain VMX transitions load the PDPTE registers. See Section 4.11.1.

Table 4-8 gives the format of a PDPTE. If any of the PDPTEs sets both the P flag (bit 0) and any reserved bit, the MOV to CR instruction causes a general-protection exception (#GP(0)) and the PDPTEs are not loaded.[2] As shown in Table 4-8, bits 2:1, 8:5, and 63:MAXPHYADDR are reserved in the PDPTEs.

1. If MAXPHYADDR < 52, bits in the range 51:MAXPHYADDR will be 0 in any physical address used by PAE paging. (The corresponding bits are reserved in the paging-structure entries.) See Section 4.1.4 for how to determine MAXPHYADDR.
2. On some processors, reserved bits are checked even in PDPTEs in which the P flag (bit 0) is 0.

Table 4-8. Format of a PAE Page-Directory-Pointer-Table Entry (PDPTE)

Bit Position(s)	Contents
0 (P)	Present; must be 1 to reference a page directory
2:1	Reserved (must be 0)
3 (PWT)	Page-level write-through; indirectly determines the memory type used to access the page directory referenced by this entry (see Section 4.9)
4 (PCD)	Page-level cache disable; indirectly determines the memory type used to access the page directory referenced by this entry (see Section 4.9)
8:5	Reserved (must be 0)
11:9	Ignored
(M–1):12	Physical address of 4-KByte aligned page directory referenced by this entry[1]
63:M	Reserved (must be 0)

NOTES:
1. M is an abbreviation for MAXPHYADDR, which is at most 52; see Section 4.1.4.

4.4.2 Linear-Address Translation with PAE Paging

PAE paging may map linear addresses to either 4-KByte pages or 2-MByte pages. Figure 4-5 illustrates the translation process when it produces a 4-KByte page; Figure 4-6 covers the case of a 2-MByte page. The following items describe the PAE paging process in more detail as well has how the page size is determined:

- Bits 31:30 of the linear address select a PDPTE register (see Section 4.4.1); this is PDPTE*i*, where *i* is the value of bits 31:30.[1] Because a PDPTE register is identified using bits 31:30 of the linear address, it controls access to a 1-GByte region of the linear-address space. If the P flag (bit 0) of PDPTE*i* is 0, the processor ignores bits 63:1, and there is no mapping for the 1-GByte region controlled by PDPTE*i*. A reference using a linear address in this region causes a page-fault exception (see Section 4.7).
- If the P flag of PDPTE*i* is 1, 4-KByte naturally aligned page directory is located at the physical address specified in bits 51:12 of PDPTE*i* (see Table 4-8 in Section 4.4.1). A page directory comprises 512 64-bit entries (PDEs). A PDE is selected using the physical address defined as follows:
  - Bits 51:12 are from PDPTE*i*.
  - Bits 11:3 are bits 29:21 of the linear address.
  - Bits 2:0 are 0.

Because a PDE is identified using bits 31:21 of the linear address, it controls access to a 2-Mbyte region of the linear-address space. Use of the PDE depends on its PS flag (bit 7):

- If the PDE's PS flag is 1, the PDE maps a 2-MByte page (see Table 4-9). The final physical address is computed as follows:
  - Bits 51:21 are from the PDE.
  - Bits 20:0 are from the original linear address.
- If the PDE's PS flag is 0, a 4-KByte naturally aligned page table is located at the physical address specified in bits 51:12 of the PDE (see Table 4-10). A page table comprises 512 64-bit entries (PTEs). A PTE is selected using the physical address defined as follows:
  - Bits 51:12 are from the PDE.

1. With PAE paging, the processor does not use CR3 when translating a linear address (as it does in the other paging modes). It does not access the PDPTEs in the page-directory-pointer table during linear-address translation.

  - Bits 11:3 are bits 20:12 of the linear address.
  - Bits 2:0 are 0.
- Because a PTE is identified using bits 31:12 of the linear address, every PTE maps a 4-KByte page (see Table 4-11). The final physical address is computed as follows:
  - Bits 51:12 are from the PTE.
  - Bits 11:0 are from the original linear address.

If the P flag (bit 0) of a PDE or a PTE is 0 or if a PDE or a PTE sets any reserved bit, the entry is used neither to reference another paging-structure entry nor to map a page. There is no translation for a linear address whose translation would use such a paging-structure entry; a reference to such a linear address causes a page-fault exception (see Section 4.7).

The following bits are reserved with PAE paging:

- If the P flag (bit 0) of a PDE or a PTE is 1, bits 62:MAXPHYADDR are reserved.
- If the P flag and the PS flag (bit 7) of a PDE are both 1, bits 20:13 are reserved.
- If IA32_EFER.NXE = 0 and the P flag of a PDE or a PTE is 1, the XD flag (bit 63) is reserved.
- If the PAT is not supported:[1]
  - If the P flag of a PTE is 1, bit 7 is reserved.
  - If the P flag and the PS flag of a PDE are both 1, bit 12 is reserved.

A reference using a linear address that is successfully translated to a physical address is performed only if allowed by the access rights of the translation; see Section 4.6.

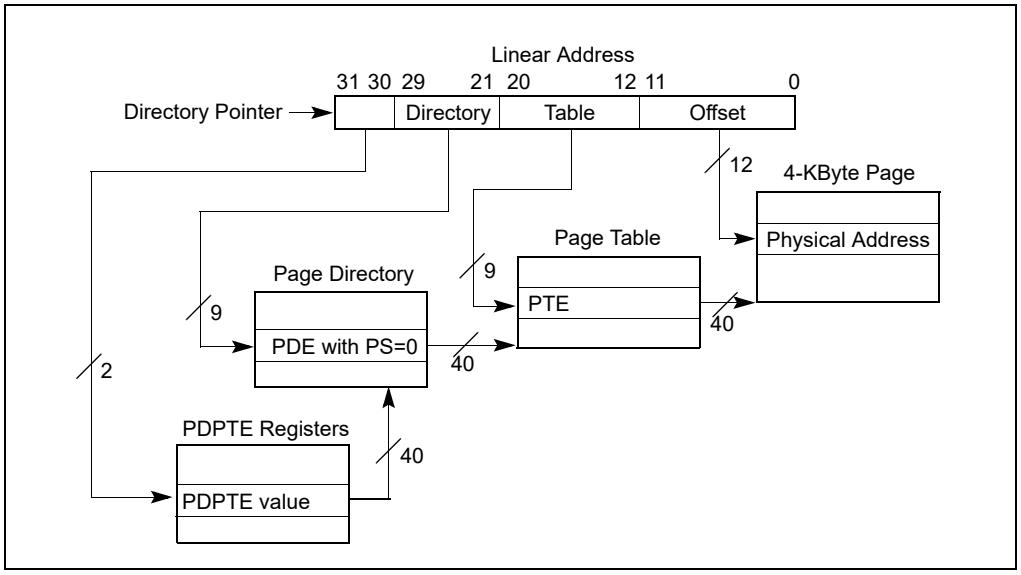

Figure 4-5. Linear-Address Translation to a 4-KByte Page using PAE Paging

1. See Section 4.1.4 for how to determine whether the PAT is supported.

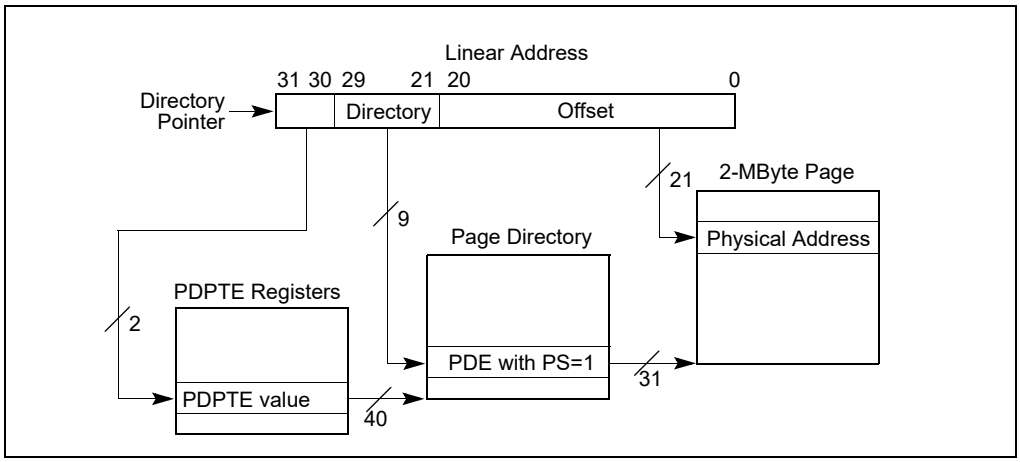

Figure 4-6. Linear-Address Translation to a 2-MByte Page using PAE Paging

Table 4-9. Format of a PAE Page-Directory Entry that Maps a 2-MByte Page

Bit Position(s)	Contents
0 (P)	Present; must be 1 to map a 2-MByte page
1 (R/W)	Read/write; if 0, writes may not be allowed to the 2-MByte page referenced by this entry (see Section 4.6)
2 (U/S)	User/supervisor; if 0, user-mode accesses are not allowed to the 2-MByte page referenced by this entry (see Section 4.6)
3 (PWT)	Page-level write-through; indirectly determines the memory type used to access the 2-MByte page referenced by this entry (see Section 4.9)
4 (PCD)	Page-level cache disable; indirectly determines the memory type used to access the 2-MByte page referenced by this entry (see Section 4.9)
5 (A)	Accessed; indicates whether software has accessed the 2-MByte page referenced by this entry (see Section 4.8)
6 (D)	Dirty; indicates whether software has written to the 2-MByte page referenced by this entry (see Section 4.8)
7 (PS)	Page size; must be 1 (otherwise, this entry references a page table; see Table 4-10)
8 (G)	Global; if CR4.PGE = 1, determines whether the translation is global (see Section 4.10); ignored otherwise
11:9	Ignored
12 (PAT)	If the PAT is supported, indirectly determines the memory type used to access the 2-MByte page referenced by this entry (see Section 4.9.2); otherwise, reserved (must be 0)[1]
20:13	Reserved (must be 0)
(M–1):21	Physical address of the 2-MByte page referenced by this entry
62:M	Reserved (must be 0)
63 (XD)	If IA32_EFER.NXE = 1, execute-disable (if 1, instruction fetches are not allowed from the 2-MByte page controlled by this entry; see Section 4.6); otherwise, reserved (must be 0)

NOTES:

1. See Section 4.1.4 for how to determine whether the PAT is supported.

Table 4-10. Format of a PAE Page-Directory Entry that References a Page Table

Bit Position(s)	Contents
0 (P)	Present; must be 1 to reference a page table
1 (R/W)	Read/write; if 0, writes may not be allowed to the 2-MByte region controlled by this entry (see Section 4.6)
2 (U/S)	User/supervisor; if 0, user-mode accesses are not allowed to the 2-MByte region controlled by this entry (see Section 4.6)
3 (PWT)	Page-level write-through; indirectly determines the memory type used to access the page table referenced by this entry (see Section 4.9)
4 (PCD)	Page-level cache disable; indirectly determines the memory type used to access the page table referenced by this entry (see Section 4.9)
5 (A)	Accessed; indicates whether this entry has been used for linear-address translation (see Section 4.8)
6	Ignored
7 (PS)	Page size; must be 0 (otherwise, this entry maps a 2-MByte page; see Table 4-9)
11:8	Ignored
(M–1):12	Physical address of 4-KByte aligned page table referenced by this entry
62:M	Reserved (must be 0)
63 (XD)	If IA32_EFER.NXE = 1, execute-disable (if 1, instruction fetches are not allowed from the 2-MByte region controlled by this entry; see Section 4.6); otherwise, reserved (must be 0)

Table 4-11. Format of a PAE Page-Table Entry that Maps a 4-KByte Page

Bit Position(s)	Contents
0 (P)	Present; must be 1 to map a 4-KByte page
1 (R/W)	Read/write; if 0, writes may not be allowed to the 4-KByte page referenced by this entry (see Section 4.6)
2 (U/S)	User/supervisor; if 0, user-mode accesses are not allowed to the 4-KByte page referenced by this entry (see Section 4.6)
3 (PWT)	Page-level write-through; indirectly determines the memory type used to access the 4-KByte page referenced by this entry (see Section 4.9)
4 (PCD)	Page-level cache disable; indirectly determines the memory type used to access the 4-KByte page referenced by this entry (see Section 4.9)
5 (A)	Accessed; indicates whether software has accessed the 4-KByte page referenced by this entry (see Section 4.8)
6 (D)	Dirty; indicates whether software has written to the 4-KByte page referenced by this entry (see Section 4.8)
7 (PAT)	If the PAT is supported, indirectly determines the memory type used to access the 4-KByte page referenced by this entry (see Section 4.9.2); otherwise, reserved (must be 0)[1]
8 (G)	Global; if CR4.PGE = 1, determines whether the translation is global (see Section 4.10); ignored otherwise

Table 4-11. Format of a PAE Page-Table Entry that Maps a 4-KByte Page (Contd.)

Bit Position(s)	Contents
11:9	Ignored
(M–1):12	Physical address of the 4-KByte page referenced by this entry
62:M	Reserved (must be 0)
63 (XD)	If IA32_EFER.NXE = 1, execute-disable (if 1, instruction fetches are not allowed from the 4-KByte page controlled by this entry; see Section 4.6); otherwise, reserved (must be 0)

NOTES:

1. See Section 4.1.4 for how to determine whether the PAT is supported.

Figure 4-7 gives a summary of the formats of CR3 and the paging-structure entries with PAE paging. For the paging structure entries, it identifies separately the format of entries that map pages, those that reference other paging structures, and those that do neither because they are "not present"; bit 0 (P) and bit 7 (PS) are highlighted because they determine how a paging-structure entry is used.

63	62	61	60	59	58	57	56	55	54	53	52	51		M[1]	M-1			32	31	30	29	28	27	26	25	24	23	22	21	20	19	18	17	16	15	14	13	12	11	10	9	8	7	6	5	4	3	2	1	0	
Ignored[2]																			Address of page-directory-pointer table																													Ignored					CR3
Reserved[3]															Address of page directory																											Ign.		Rsvd.				PCD	PWT	Rsvd		1	PDPTE: present
Ignored																																																				0	PDTPE: not present
XD[4]	Reserved														Address of 2MB page frame																													Reserved												PAT	Ign.		G	1	D	A	PCD	PWT	U/S	R/W	1	PDE: 2MB page
XD	Reserved														Address of page table																													Ign.			0	Ign	A	PCD	PWT	U/S	R/W	1	PDE: page table
Ignored																																																				0	PDE: not present
XD	Reserved														Address of 4KB page frame																													Ign.		G	PAT	D	A	PCD	PWT	U/S	R/W	1	PTE: 4KB page
Ignored																																																				0	PTE: not present

Figure 4-7. Formats of CR3 and Paging-Structure Entries with PAE Paging

NOTES:

1. M is an abbreviation for MAXPHYADDR.
2. CR3 has 64 bits only on processors supporting the Intel-64 architecture. These bits are ignored with PAE paging.
3. Reserved fields must be 0.
4. If IA32_EFER.NXE = 0 and the P flag of a PDE or a PTE is 1, the XD flag (bit 63) is reserved.

4.5 4-LEVEL PAGING AND 5-LEVEL PAGING

Because the operation of 4-level paging and 5-level paging is very similar, they are described together in this section. The following items highlight the distinctions between the two paging modes:

- A logical processor uses 4-level paging if CR0.PG = 1, CR4.PAE = 1, IA32_EFER.LME = 1, and CR4.LA57 = 0. 4-level paging translates 48-bit linear addresses to 52-bit physical addresses.[1] Although 52 bits corresponds to 4 PBytes, linear addresses are limited to 48 bits; at most 256 TBytes of linear-address space may be accessed at any given time.
- A logical processor uses 5-level paging if CR0.PG = 1, CR4.PAE = 1, IA32_EFER.LME = 1, and CR4.LA57 = 1. 5-level paging translates 57-bit linear addresses to 52-bit physical addresses. Thus, 5-level paging supports a linear-address space sufficient to access the entire physical-address space.

4.5.1 Ordinary Paging and HLAT Paging

There are two forms of 4-level paging and 5-level paging that differ principally with regard to how linear-address translation identifies the first paging structure.

The normal form is called **ordinary paging**, and it uses CR3 to locate the first paging structure, similar to what is done for 32-bit paging. Section 4.5.2 provides details of this use of CR3.

An alternative form of paging may be used with the VMX feature called hypervisor-managed linear-address translation (HLAT). Called **HLAT paging**, this form is used only in VMX non-root operation and only if the "enable HLAT" VM-execution control is 1.[2] HLAT paging locates the first paging structure using a VM-execution control field in the VMCS called the **HLAT pointer** (**HLATP**). Section 4.5.3 provides details.

Whether HLAT paging is used to translate a specific linear address depends on the address and on the value of a VM-execution control field in the VMCS called the **HLAT prefix size**:

- If the HLAT prefix size is zero, every linear address is translated using HLAT paging.
- If the HLAT prefix size is not zero, a linear address is translated using HLAT paging if bit 63 of the address is 1.[3] The address is translated using ordinary paging if bit 63 of the address is 0.

In some cases, HLAT paging may specify that a translation of a linear address must be restarted. When this occurs, the linear address is then translated using ordinary paging (starting with a paging structure identified using CR3). The situations leading to this restart are detailed in Section 4.5.4, and additional details of the restart process are given in Section 4.5.5.

4.5.2 Use of CR3 with Ordinary 4-Level Paging and 5-Level Paging

Ordinary 4-level paging and 5-level paging each translate linear addresses using a hierarchy of in-memory paging structures located using the contents of CR3, which is used to locate the first paging structure. For 4-level paging, this is the PML4 table, and for 5-level paging it is the PML5 table. Use of CR3 with 4-level paging and 5-level paging depends on whether process-context identifiers (PCIDs) have been enabled by setting CR4.PCIDE:

- Table 4-12 illustrates how CR3 is used with 4-level paging and 5-level paging if CR4.PCIDE = 0.

Table 4-12. Use of CR3 with 4-Level Paging and 5-level Paging and CR4.PCIDE = 0

Bit Position(s)	Contents
2:0	Ignored

1. If MAXPHYADDR < 52, bits in the range 51:MAXPHYADDR will be 0 in any physical address used by 4-level paging. (The corresponding bits are reserved in the paging-structure entries.) See Section 4.1.4 for how to determine MAXPHYADDR.
2. HLAT paging is used only with 4-level paging and 5-level paging. It is never used with 32-bit paging or PAE paging, regardless of the value of the "enable HLAT" VM-execution control.
3. This behavior applies if the CPU enumerates a maximum HLAT prefix size of 1 in IA32_VMX_EPT_VPID_CAP[53:48] (see Appendix A.10). Behavior when a different value is enumerated is not currently defined.

Table 4-12. Use of CR3 with 4-Level Paging and 5-level Paging and CR4.PCIDE = 0 (Contd.)

Bit Position(s)	Contents
3 (PWT)	Page-level write-through; indirectly determines the memory type used to access the PML4 table or PML5 table during linear-address translation (see Section 4.9.2)
4 (PCD)	Page-level cache disable; indirectly determines the memory type used to access the PML4 table or PML5 table during linear-address translation (see Section 4.9.2)
11:5	Ignored
M–1:12	Physical address of the 4-KByte aligned PML4 table or PML5 table used for linear-address translation[1]
63:M	Reserved (must be 0)

NOTES:

1. M is an abbreviation for MAXPHYADDR, which is at most 52; see Section 4.1.4.

- Table 4-13 illustrates how CR3 is used with 4-level paging and 5-level paging if CR4.PCIDE = 1.

Table 4-13. Use of CR3 with 4-Level Paging and 5-Level Paging and CR4.PCIDE = 1

Bit Position(s)	Contents
11:0	PCID (see Section 4.10.1)[1]
M–1:12	Physical address of the 4-KByte aligned PML4 table used for linear-address translation[2]
63:M	Reserved (must be 0)[3]

NOTES:

1. Section 4.9.2 explains how the processor determines the memory type used to access the PML4 table during linear-address translation with CR4.PCIDE = 1.
2. M is an abbreviation for MAXPHYADDR, which is at most 52; see Section 4.1.4.
3. See Section 4.10.4.1 for use of bit 63 of the source operand of the MOV to CR3 instruction.

After software modifies the value of CR4.PCIDE, the logical processor immediately begins using CR3 as specified for the new value. For example, if software changes CR4.PCIDE from 1 to 0, the current PCID immediately changes from CR3[11:0] to 000H (see also Section 4.10.4.1). In addition, the logical processor subsequently determines the memory type used to access the PML4 table using CR3.PWT and CR3.PCD, which had been bits 4:3 of the PCID.

4.5.3 Use of HLATP with HLAT 4-Level Paging and 5-Level Paging

With HLAT paging, 4-level paging and 5-level paging each translate linear addresses using a hierarchy of in-memory paging structures located using the value of HLATP (a VM-execution control field in the VMCS), which is used to locate the first paging structure. For 4-level paging, this is the PML4 table, and for 5-level paging it is the PML5 table.

HLATP has the same format as that given for CR3 in Table 4-12, with the exception that bits 2:0 and bits 11:5 are reserved and must be zero (these bits are checked by VM entry). HLATP does not contain a PCID value. HLAT paging with CR4.PCIDE = 1 uses the PCID value in CR3[11:0].

4.5.4 Linear-Address Translation with 4-Level Paging and 5-Level Paging

4-level paging and 5-level paging may map linear addresses to 4-KByte pages, 2-MByte pages, or 1-GByte pages.[1] Figure 4-8 illustrates the translation process for 4-level paging when it produces a 4-KByte page; Figure 4-9 covers the case of a 2-MByte page, and Figure 4-10 the case of a 1-GByte page. (The process for 5-level paging is similar.)

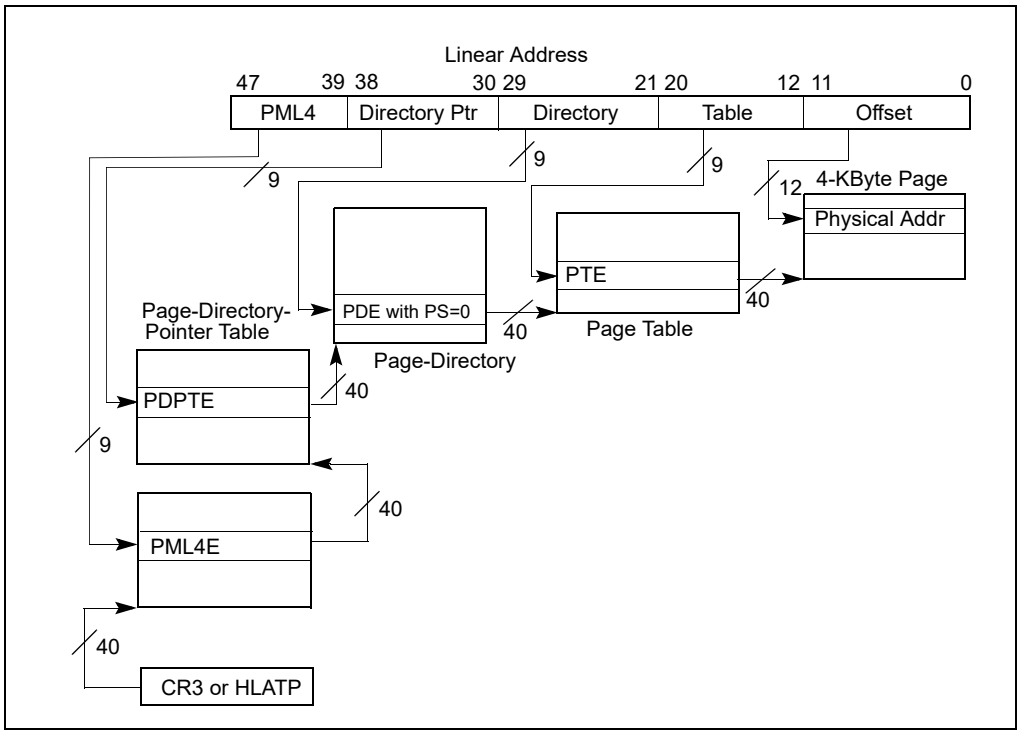

Figure 4-8. Linear-Address Translation to a 4-KByte Page using 4-Level Paging

1. Not all processors support 1-GByte pages; see Section 4.1.4.

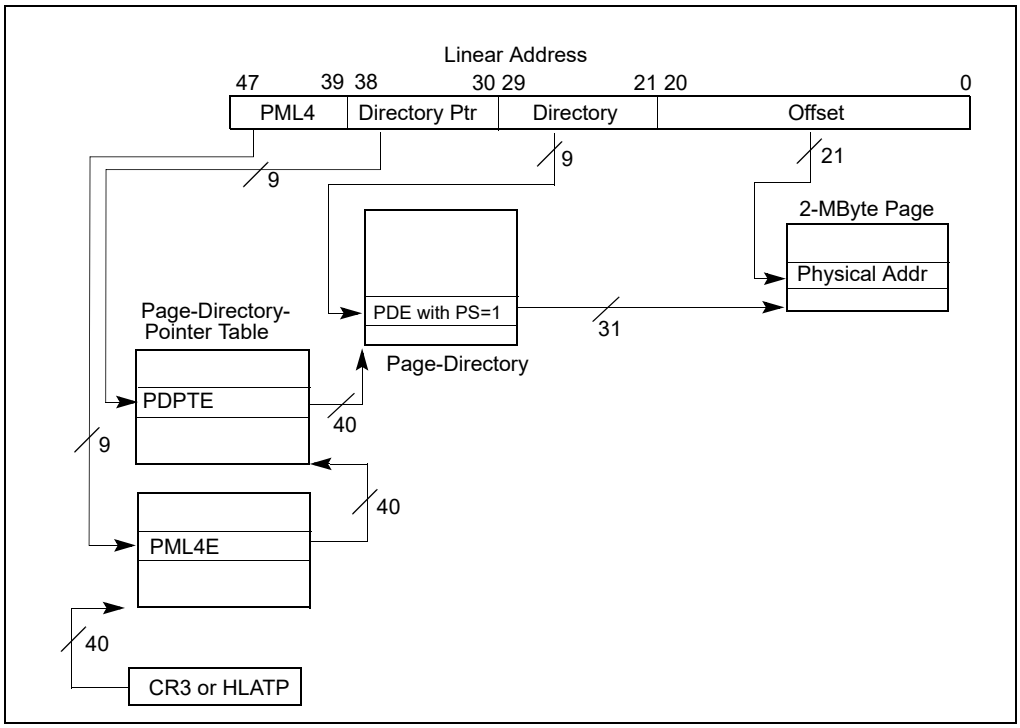

Figure 4-9. Linear-Address Translation to a 2-MByte Page using 4-Level Paging

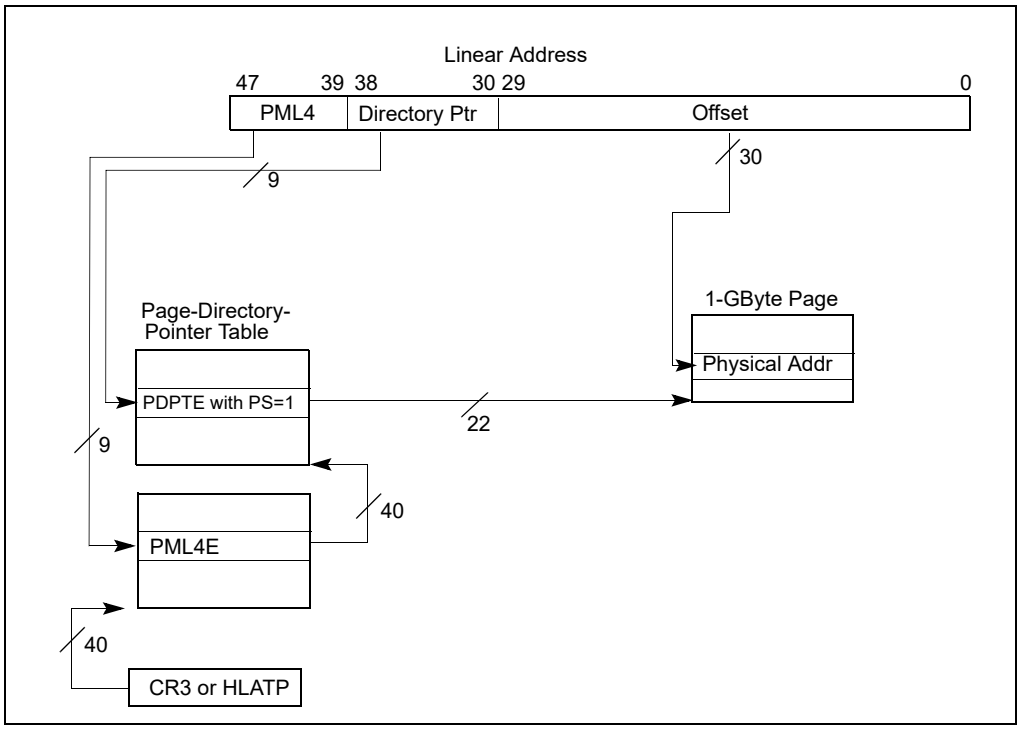

Figure 4-10. Linear-Address Translation to a 1-GByte Page using 4-Level Paging

4-level paging and 5-level paging associate with each linear address a **protection key**. Section 4.6 explains how the processor uses the protection key in its determination of the access rights of each linear address.

The remainder of this section describes the translation process used by 4-level paging and 5-level paging in more detail, as well has how the page size and protection key are determined. Because the process used by the two paging modes is similar, they are described together, with any differences identified, in the following items:

- With 5-level paging, a 4-KByte naturally aligned PML5 table is located at the physical address specified in bits 51:12 of CR3 (see Table 4-12). (4-level paging does not use a PML5 table and omits this step.) A PML5 table comprises 512 64-bit entries (PML5Es). A PML5E is selected using the physical address defined as follows:
  - Bits 51:12 are from CR3 or HLATP.
  - Bits 11:3 are bits 56:48 of the linear address.
  - Bits 2:0 are all 0.

  Because a PML5E is identified using bits 56:48 of the linear address, it controls access to a 256-TByte region of the linear-address space.

  With HLAT paging, if bit 11 of the PML5E is 1, translation is restarted with ordinary paging with a maximum page size of 256-TBytes (see Section 4.5.5). Otherwise, the translation process continues as described in the next item.
- A 4-KByte naturally aligned PML4 table is located at the physical address specified in bits 51:12 of CR3 (for 4-level paging; see Table 4-12) or in bits 51:12 of the PML4E (for 5-level paging; see Table 4-14). A PML4 table comprises 512 64-bit entries (PML4Es). A PML4E is selected using the physical address defined as follows:
  - Bits 51:12 are from CR3 or the HLATP (for 4-level paging) or in bits 51:12 of the PML4E (for 5-level paging).
  - Bits 11:3 are bits 47:39 of the linear address.
  - Bits 2:0 are all 0.

  Because a PML4E is identified using bits 47:39 of the linear address, it controls access to a 512-GByte region of the linear-address space.

  With HLAT paging, if bit 11 of the PML4E is 1, translation is restarted with ordinary paging with a maximum page size of 512-GBytes (see Section 4.5.5). Otherwise, the translation process continues as described in the next item.
- A 4-KByte naturally aligned page-directory-pointer table is located at the physical address specified in bits 51:12 of the PML4E (see Table 4-15). A page-directory-pointer table comprises 512 64-bit entries (PDPTEs). A PDPTE is selected using the physical address defined as follows:
  - Bits 51:12 are from the PML4E.
  - Bits 11:3 are bits 38:30 of the linear address.
  - Bits 2:0 are all 0.

Because a PDPTE is identified using bits 47:30 of the linear address, it controls access to a 1-GByte region of the linear-address space.

With HLAT paging, if bit 11 of the PDPTE is 1, translation is restarted with ordinary paging with a maximum page size of 1-GByte (see Section 4.5.5). Otherwise, the translation process continues as described below.

Use of the PDPTE depends on its PS flag (bit 7):[1]

- If the PDPTE's PS flag is 1, the PDPTE maps a 1-GByte page (see Table 4-16). The final physical address is computed as follows:
  - Bits 51:30 are from the PDPTE.
  - Bits 29:0 are from the original linear address.

  The linear address's protection key is the value of bits 62:59 of the PDPTE (see Section 4.6.2).

1. The PS flag of a PDPTE is reserved and must be 0 (if the P flag is 1) if 1-GByte pages are not supported. See Section 4.1.4 for how to determine whether 1-GByte pages are supported.

- If the PDPTE's PS flag is 0, a 4-KByte naturally aligned page directory is located at the physical address specified in bits 51:12 of the PDPTE (see Table 4-17). A page directory comprises 512 64-bit entries (PDEs). A PDE is selected using the physical address defined as follows:
  - Bits 51:12 are from the PDPTE.
  - Bits 11:3 are bits 29:21 of the linear address.
  - Bits 2:0 are all 0.

Because a PDE is identified using bits 47:21 of the linear address, it controls access to a 2-MByte region of the linear-address space.

With HLAT paging, if bit 11 of the PDE is 1, translation is restarted with ordinary paging with a maximum page size of 2-MBytes (see Section 4.5.5). Otherwise, the translation process continues as described below.

Use of the PDE depends on its PS flag:

- If the PDE's PS flag is 1, the PDE maps a 2-MByte page (see Table 4-18). The final physical address is computed as follows:
  - Bits 51:21 are from the PDE.
  - Bits 20:0 are from the original linear address.

  The linear address's protection key is the value of bits 62:59 of the PDE (see Section 4.6.2).
- If the PDE's PS flag is 0, a 4-KByte naturally aligned page table is located at the physical address specified in bits 51:12 of the PDE (see Table 4-19). A page table comprises 512 64-bit entries (PTEs). A PTE is selected using the physical address defined as follows:
  - Bits 51:12 are from the PDE.
  - Bits 11:3 are bits 20:12 of the linear address.
  - Bits 2:0 are all 0.
- Because a PTE is identified using bits 47:12 of the linear address, every PTE maps a 4-KByte page (see Table 4-20).

  With HLAT paging, if bit 11 of the PTE is 1, translation is restarted with ordinary paging with a maximum page size of 4-KBytes (see Section 4.5.5). Otherwise, the final physical address is computed as follows:
  - Bits 51:12 are from the PTE.
  - Bits 11:0 are from the original linear address.

  The linear address's protection key is the value of bits 62:59 of the PTE (see Section 4.6.2).

If a paging-structure entry's P flag (bit 0) is 0 or if the entry sets any reserved bit, the entry is used neither to reference another paging-structure entry nor to map a page. There is no translation for a linear address whose translation would use such a paging-structure entry; a reference to such a linear address causes a page-fault exception (see Section 4.7).

The following bits in a paging-structure entry are reserved with 4-level paging and 5-level paging (assuming that the entry's P flag is 1):

- Bits 51:MAXPHYADDR are reserved in every paging-structure entry.
- The PS flag is reserved in a PML5E or a PML4E.
- If 1-GByte pages are not supported, the PS flag is reserved in a PDPTE.[1]
- If the PS flag in a PDPTE is 1, bits 29:13 of the entry are reserved.
- If the PS flag in a PDE is 1, bits 20:13 of the entry are reserved.
- If IA32_EFER.NXE = 0, the XD flag (bit 63) is reserved in every paging-structure entry.

A reference using a linear address that is successfully translated to a physical address is performed only if allowed by the access rights of the translation; see Section 4.6.

1. See Section 4.1.4 for how to determine whether 1-GByte pages are supported.

Figure 4-11 gives a summary of the formats of CR3 and the 4-level and 5-level paging-structure entries. For the paging structure entries, it identifies separately the format of entries that map pages, those that reference other paging structures, and those that do neither because they are "not present"; bit 0 (P) and bit 7 (PS) are highlighted because they determine how a paging-structure entry is used.

Table 4-14. Format of a PML5 Entry (PML5E) that References a PML4 Table

Bit Position(s)	Contents
0 (P)	Present; must be 1 to reference a PML4 table
1 (R/W)	Read/write; if 0, writes may not be allowed to the 256-TByte region controlled by this entry (see Section 4.6)
2 (U/S)	User/supervisor; if 0, user-mode accesses are not allowed to the 256-TByte region controlled by this entry (see Section 4.6)
3 (PWT)	Page-level write-through; indirectly determines the memory type used to access the PML4 table referenced by this entry (see Section 4.9.2)
4 (PCD)	Page-level cache disable; indirectly determines the memory type used to access the PML4 table referenced by this entry (see Section 4.9.2)
5 (A)	Accessed; indicates whether this entry has been used for linear-address translation (see Section 4.8)
6	Ignored
7 (PS)	Reserved (must be 0)
10:8	Ignored
11 (R)	For ordinary paging, ignored; for HLAT paging, restart (if 1, linear-address translation is restarted with ordinary paging)
M–1:12	Physical address of 4-KByte aligned PML4 table referenced by this entry
51:M	Reserved (must be 0)
62:52	Ignored
63 (XD)	If IA32_EFER.NXE = 1, execute-disable (if 1, instruction fetches are not allowed from the 256-TByte region controlled by this entry; see Section 4.6); otherwise, reserved (must be 0)

Table 4-15. Format of a PML4 Entry (PML4E) that References a Page-Directory-Pointer Table

Bit Position(s)	Contents
0 (P)	Present; must be 1 to reference a page-directory-pointer table
1 (R/W)	Read/write; if 0, writes may not be allowed to the 512-GByte region controlled by this entry (see Section 4.6)
2 (U/S)	User/supervisor; if 0, user-mode accesses are not allowed to the 512-GByte region controlled by this entry (see Section 4.6)
3 (PWT)	Page-level write-through; indirectly determines the memory type used to access the page-directory-pointer table referenced by this entry (see Section 4.9.2)
4 (PCD)	Page-level cache disable; indirectly determines the memory type used to access the page-directory-pointer table referenced by this entry (see Section 4.9.2)
5 (A)	Accessed; indicates whether this entry has been used for linear-address translation (see Section 4.8)
6	Ignored

Table 4-15. Format of a PML4 Entry (PML4E) that References a Page-Directory-Pointer Table (Contd.)

Bit Position(s)	Contents
7 (PS)	Reserved (must be 0)
10:8	Ignored
11 (R)	For ordinary paging, ignored; for HLAT paging, restart (if 1, linear-address translation is restarted with ordinary paging)
M–1:12	Physical address of 4-KByte aligned page-directory-pointer table referenced by this entry
51:M	Reserved (must be 0)
62:52	Ignored
63 (XD)	If IA32_EFER.NXE = 1, execute-disable (if 1, instruction fetches are not allowed from the 512-GByte region controlled by this entry; see Section 4.6); otherwise, reserved (must be 0)

Table 4-16. Format of a Page-Directory-Pointer-Table Entry (PDPTE) that Maps a 1-GByte Page

Bit Position(s)	Contents
0 (P)	Present; must be 1 to map a 1-GByte page
1 (R/W)	Read/write; if 0, writes may not be allowed to the 1-GByte page referenced by this entry (see Section 4.6)
2 (U/S)	User/supervisor; if 0, user-mode accesses are not allowed to the 1-GByte page referenced by this entry (see Section 4.6)
3 (PWT)	Page-level write-through; indirectly determines the memory type used to access the 1-GByte page referenced by this entry (see Section 4.9.2)
4 (PCD)	Page-level cache disable; indirectly determines the memory type used to access the 1-GByte page referenced by this entry (see Section 4.9.2)
5 (A)	Accessed; indicates whether software has accessed the 1-GByte page referenced by this entry (see Section 4.8)
6 (D)	Dirty; indicates whether software has written to the 1-GByte page referenced by this entry (see Section 4.8)
7 (PS)	Page size; must be 1 (otherwise, this entry references a page directory; see Table 4-17)
8 (G)	Global; if CR4.PGE = 1, determines whether the translation is global (see Section 4.10); ignored otherwise
10:9	Ignored
11 (R)	For ordinary paging, ignored; for HLAT paging, restart (if 1, linear-address translation is restarted with ordinary paging)
12 (PAT)	Indirectly determines the memory type used to access the 1-GByte page referenced by this entry (see Section 4.9.2)[1]
29:13	Reserved (must be 0)
(M–1):30	Physical address of the 1-GByte page referenced by this entry

Table 4-16. Format of a Page-Directory-Pointer-Table Entry (PDPTE) that Maps a 1-GByte Page (Contd.)

Bit Position(s)	Contents
51:M	Reserved (must be 0)
58:52	Ignored
62:59	Protection key; if CR4.PKE = 1 or CR4.PKS = 1, this may control the page's access rights (see Section 4.6.2); otherwise, it is ignored and not used to control access rights.
63 (XD)	If IA32_EFER.NXE = 1, execute-disable (if 1, instruction fetches are not allowed from the 1-GByte page controlled by this entry; see Section 4.6); otherwise, reserved (must be 0)

NOTES:

1. The PAT is supported on all processors that support 4-level paging.

Table 4-17. Format of a Page-Directory-Pointer-Table Entry (PDPTE) that References a Page Directory

Bit Position(s)	Contents
0 (P)	Present; must be 1 to reference a page directory
1 (R/W)	Read/write; if 0, writes may not be allowed to the 1-GByte region controlled by this entry (see Section 4.6)
2 (U/S)	User/supervisor; if 0, user-mode accesses are not allowed to the 1-GByte region controlled by this entry (see Section 4.6)
3 (PWT)	Page-level write-through; indirectly determines the memory type used to access the page directory referenced by this entry (see Section 4.9.2)
4 (PCD)	Page-level cache disable; indirectly determines the memory type used to access the page directory referenced by this entry (see Section 4.9.2)
5 (A)	Accessed; indicates whether this entry has been used for linear-address translation (see Section 4.8)
6	Ignored
7 (PS)	Page size; must be 0 (otherwise, this entry maps a 1-GByte page; see Table 4-16)
10:8	Ignored
11 (R)	For ordinary paging, ignored; for HLAT paging, restart (if 1, linear-address translation is restarted with ordinary paging)
(M–1):12	Physical address of 4-KByte aligned page directory referenced by this entry
51:M	Reserved (must be 0)
62:52	Ignored
63 (XD)	If IA32_EFER.NXE = 1, execute-disable (if 1, instruction fetches are not allowed from the 1-GByte region controlled by this entry; see Section 4.6); otherwise, reserved (must be 0)

Table 4-18. Format of a Page-Directory Entry that Maps a 2-MByte Page

Bit Position(s)	Contents
0 (P)	Present; must be 1 to map a 2-MByte page
1 (R/W)	Read/write; if 0, writes may not be allowed to the 2-MByte page referenced by this entry (see Section 4.6)
2 (U/S)	User/supervisor; if 0, user-mode accesses are not allowed to the 2-MByte page referenced by this entry (see Section 4.6)
3 (PWT)	Page-level write-through; indirectly determines the memory type used to access the 2-MByte page referenced by this entry (see Section 4.9.2)
4 (PCD)	Page-level cache disable; indirectly determines the memory type used to access the 2-MByte page referenced by this entry (see Section 4.9.2)
5 (A)	Accessed; indicates whether software has accessed the 2-MByte page referenced by this entry (see Section 4.8)
6 (D)	Dirty; indicates whether software has written to the 2-MByte page referenced by this entry (see Section 4.8)
7 (PS)	Page size; must be 1 (otherwise, this entry references a page table; see Table 4-19)
8 (G)	Global; if CR4.PGE = 1, determines whether the translation is global (see Section 4.10); ignored otherwise
10:9	Ignored
11 (R)	For ordinary paging, ignored; for HLAT paging, restart (if 1, linear-address translation is restarted with ordinary paging)
12 (PAT)	Indirectly determines the memory type used to access the 2-MByte page referenced by this entry (see Section 4.9.2)
20:13	Reserved (must be 0)
(M–1):21	Physical address of the 2-MByte page referenced by this entry
51:M	Reserved (must be 0)
58:52	Ignored
62:59	Protection key; if CR4.PKE = 1 or CR4.PKS = 1, this may control the page's access rights (see Section 4.6.2); otherwise, it is ignored and not used to control access rights.
63 (XD)	If IA32_EFER.NXE = 1, execute-disable (if 1, instruction fetches are not allowed from the 2-MByte page controlled by this entry; see Section 4.6); otherwise, reserved (must be 0)

Table 4-19. Format of a Page-Directory Entry that References a Page Table

Bit Position(s)	Contents
0 (P)	Present; must be 1 to reference a page table
1 (R/W)	Read/write; if 0, writes may not be allowed to the 2-MByte region controlled by this entry (see Section 4.6)
2 (U/S)	User/supervisor; if 0, user-mode accesses are not allowed to the 2-MByte region controlled by this entry (see Section 4.6)
3 (PWT)	Page-level write-through; indirectly determines the memory type used to access the page table referenced by this entry (see Section 4.9.2)
4 (PCD)	Page-level cache disable; indirectly determines the memory type used to access the page table referenced by this entry (see Section 4.9.2)
5 (A)	Accessed; indicates whether this entry has been used for linear-address translation (see Section 4.8)
6	Ignored
7 (PS)	Page size; must be 0 (otherwise, this entry maps a 2-MByte page; see Table 4-18)
10:8	Ignored
11 (R)	For ordinary paging, ignored; for HLAT paging, restart (if 1, linear-address translation is restarted with ordinary paging)
(M–1):12	Physical address of 4-KByte aligned page table referenced by this entry
51:M	Reserved (must be 0)
62:52	Ignored
63 (XD)	If IA32_EFER.NXE = 1, execute-disable (if 1, instruction fetches are not allowed from the 2-MByte region controlled by this entry; see Section 4.6); otherwise, reserved (must be 0)

Table 4-20. Format of a Page-Table Entry that Maps a 4-KByte Page

Bit Position(s)	Contents
0 (P)	Present; must be 1 to map a 4-KByte page
1 (R/W)	Read/write; if 0, writes may not be allowed to the 4-KByte page referenced by this entry (see Section 4.6)
2 (U/S)	User/supervisor; if 0, user-mode accesses are not allowed to the 4-KByte page referenced by this entry (see Section 4.6)
3 (PWT)	Page-level write-through; indirectly determines the memory type used to access the 4-KByte page referenced by this entry (see Section 4.9.2)
4 (PCD)	Page-level cache disable; indirectly determines the memory type used to access the 4-KByte page referenced by this entry (see Section 4.9.2)
5 (A)	Accessed; indicates whether software has accessed the 4-KByte page referenced by this entry (see Section 4.8)
6 (D)	Dirty; indicates whether software has written to the 4-KByte page referenced by this entry (see Section 4.8)
7 (PAT)	Indirectly determines the memory type used to access the 4-KByte page referenced by this entry (see Section 4.9.2)
8 (G)	Global; if CR4.PGE = 1, determines whether the translation is global (see Section 4.10); ignored otherwise
10:9	Ignored
11 (R)	For ordinary paging, ignored; for HLAT paging, restart (if 1, linear-address translation is restarted with ordinary paging)
(M–1):12	Physical address of the 4-KByte page referenced by this entry
51:M	Reserved (must be 0)
58:52	Ignored
62:59	Protection key; if CR4.PKE = 1 or CR4.PKS = 1, this may control the page's access rights (see Section 4.6.2); otherwise, it is ignored and not used to control access rights.
63 (XD)	If IA32_EFER.NXE = 1, execute-disable (if 1, instruction fetches are not allowed from the 4-KByte page controlled by this entry; see Section 4.6); otherwise, reserved (must be 0)

63	62	61	60	59	58	57	56	55	54	53	52	51		M[1]	M-1			32	31	30	29	28	27	26	25	24	23	22	21	20	19	18	17	16	15	14	13	12	11	10	9	8	7	6	5	4	3	2	1	0	
Reserved[2]															Address of PML4 table (4-level paging) or PML5 table (5-level paging)																									Ignored						PCD	PWT	Ign.			**CR3**
XD[3]	Ignored												Rsvd.		Address of PML4 table																									R[4]	Ign.			Rsvd	Ign	A	PCD	PWT	U/S	R/W	1	**PML5E: present**
Ignored																																																		0	**PML5E: not present**
XD	Ignored												Rsvd.		Address of page-directory-pointer table																									R	Ign.			Rsvd	Ign	A	PCD	PWT	U/S	R/W	1	**PML4E: present**
Ignored																																																		0	**PML4E: not present**
XD	Prot. Key[5]		Ignored										Rsvd.		Address of 1GB page frame												Reserved											PAT	R	Ign.		G	1	D	A	PCD	PWT	U/S	R/W	1	**PDPTE: 1GB page**
XD	Ignored												Rsvd.		Address of page directory																									R	Ign.			0	Ign	A	PCD	PWT	U/S	R/W	1	**PDPTE: page directory**
Ignored																																																		0	**PDTPE: not present**
XD	Prot. Key		Ignored										Rsvd.		Address of 2MB page frame																		Reserved					PAT	R	Ign.		G	1	D	A	PCD	PWT	U/S	R/W	1	**PDE: 2MB page**
XD	Ignored												Rsvd.		Address of page table																									R	Ign.			0	Ign	A	PCD	PWT	U/S	R/W	1	**PDE: page table**
Ignored																																																		0	**PDE: not present**
XD	Prot. Key		Ignored										Rsvd.		Address of 4KB page frame																									R	Ign.		G	PAT	D	A	PCD	PWT	U/S	R/W	1	**PTE: 4KB page**
Ignored																																																		0	**PTE: not present**

Figure 4-11. Formats of CR3 and Paging-Structure Entries with 4-Level Paging and 5-Level Paging

NOTES:

1. M is an abbreviation for MAXPHYADDR.
2. Reserved fields must be 0.
3. If IA32_EFER.NXE = 0 and the P flag of a paging-structure entry is 1, the XD flag (bit 63) is reserved.
4. Bit 11 is R (restart) only for HLAT paging; it is ignored for ordinary paging.
5. The protection key is used only if software has enabled the appropriate feature; see Section 4.6.2. It is ignored otherwise.

4.5.5 Restart of HLAT Paging

As noted in Section 4.5.1, HLAT paging may specify that a translation of a linear address must be restarted. Specifically, this occurs when HLAT paging encounters a paging-structure entry that sets bit 11 (see Section 4.5.4).

When this occurs, translation of the linear address is restarted using ordinary paging (starting with a paging structure identified using CR3). The restarted translation proceeds just as if the HLAT feature were not enabled. The entire linear address is translated again, including those portions that had been used by HLAT paging prior to the restart.

The process of restarting HLAT paging (using ordinary paging) always specifies a maximum page size to be used when a resulting translation is cached in the TLBs. This maximum page size depends on the level of the paging-structure entry that restarts the translation by setting bit 11; details are given in Section 4.5.4. The page size of the translation produced by the restarted process is never greater than this maximum page size. See Section 4.10.2.2 for more discussion.

4.6 ACCESS RIGHTS

There is a translation for a linear address if the processes described in Section 4.3, Section 4.4.2, and Section 4.5 (depending upon the paging mode) completes and produces a physical address. Whether an access is permitted by a translation is determined by the access rights specified by the paging-structure entries controlling the translation;[1] paging-mode modifiers in CR0, CR4, and the IA32_EFER MSR; EFLAGS.AC; and the mode of the access.

Section 4.6.1 describes how the processor determines the access rights for each linear address. Section 4.6.2 provides additional information about how protection keys contribute to access-rights determination. (They do so only with 4-level paging and 5-level paging, and only if CR4.PKE = 1 or CR4.PKS = 1.)

NOTE

If HLAT paging is restarted, permissions are determined only by the access rights specified by the paging-structure entries that the subsequent ordinary paging used to translate the linear address. The access rights specified by the entries used earlier by HLAT paging do not apply.

4.6.1 Determination of Access Rights

Every access to a linear address is either a **supervisor-mode access** or a **user-mode access**. For all instruction fetches and most data accesses, this distinction is determined by the current privilege level (CPL): accesses made while CPL < 3 are supervisor-mode accesses, while accesses made while CPL = 3 are user-mode accesses.

Some operations implicitly access system data structures with linear addresses; the resulting accesses to those data structures are supervisor-mode accesses regardless of CPL. Examples of such accesses include the following: accesses to the global descriptor table (GDT) or local descriptor table (LDT) to load a segment descriptor; accesses to the interrupt descriptor table (IDT) when delivering an interrupt or exception; and accesses to the task-state segment (TSS) as part of a task switch or change of CPL. All these accesses are called **implicit supervisor-mode accesses** regardless of CPL. Other accesses made while CPL < 3 are called **explicit supervisor-mode accesses**.

Access rights are also controlled by the **mode** of a linear address as specified by the paging-structure entries controlling the translation of the linear address. If the U/S flag (bit 2) is 0 in at least one of the paging-structure entries, the address is a **supervisor-mode address**. Otherwise, the address is a **user-mode address**.

When the shadow-stack feature of control-flow enforcement technology (CET) is enabled, certain accesses to linear addresses are considered **shadow-stack accesses** (see Section 17.2, "Shadow Stacks"in the *Intel® 64 and IA-32 Architectures Software Developer's Manual, Volume 1*). Like ordinary data accesses, each shadow-stack access is defined as being either a user access or a supervisor access. In general, a shadow-stack access is a user access if CPL = 3 and a supervisor access if CPL < 3. The WRUSS instruction is an exception; although it can be executed only if CPL = 0, the processor treats its shadow-stack accesses as user accesses.

1. With PAE paging, the PDPTEs do not determine access rights.

Shadow-stack accesses are allowed only to **shadow-stack addresses**. A linear address is a shadow-stack address if the following are true of the translation of the linear address: (1) the R/W flag (bit 1) is 0 and the dirty flag (bit 6) is 1 in the paging-structure entry that maps the page containing the linear address; and (2) the R/W flag is 1 in every other paging-structure entry controlling the translation of the linear address.

The following items detail how paging determines access rights (only the items noted explicitly apply to shadow-stack accesses):

NOTE

Many of the items below refer to an address with a protection key for which read (or write) access is permitted. Section 4.6.2 provides details on when a protection key will permit (or not permit) a data access (read or write) to a linear address using that protection key.

- For supervisor-mode accesses:
  - Data may be read (implicitly or explicitly) from any supervisor-mode address with a protection key for which read access is permitted.
  - Data reads from user-mode pages.
    Access rights depend on the value of CR4.SMAP:
    - If CR4.SMAP = 0, data may be read from any user-mode address with a protection key for which read access is permitted.
    - If CR4.SMAP = 1, access rights depend on the value of EFLAGS.AC and whether the access is implicit or explicit:
      - If EFLAGS.AC = 1 and the access is explicit, data may be read from any user-mode address with a protection key for which read access is permitted.
      - If EFLAGS.AC = 0 or the access is implicit, data may not be read from any user-mode address.
  - Data writes to supervisor-mode addresses.
    Access rights depend on the value of CR0.WP:
    - If CR0.WP = 0, data may be written to any supervisor-mode address with a protection key for which write access is permitted.
    - If CR0.WP = 1, data may be written to any supervisor-mode address with a translation for which the R/W flag (bit 1) is 1 in every paging-structure entry controlling the translation and with a protection key for which write access is permitted; data may not be written to any supervisor-mode address with a translation for which the R/W flag is 0 in any paging-structure entry controlling the translation.
  - Data writes to user-mode addresses.
    Access rights depend on the value of CR0.WP:
    - If CR0.WP = 0, access rights depend on the value of CR4.SMAP:
      - If CR4.SMAP = 0, data may be written to any user-mode address with a protection key for which write access is permitted.
      - If CR4.SMAP = 1, access rights depend on the value of EFLAGS.AC and whether the access is implicit or explicit:
        - If EFLAGS.AC = 1 and the access is explicit, data may be written to any user-mode address with a protection key for which write access is permitted.
        - If EFLAGS.AC = 0 or the access is implicit, data may not be written to any user-mode address.
    - If CR0.WP = 1, access rights depend on the value of CR4.SMAP:
      - If CR4.SMAP = 0, data may be written to any user-mode address with a translation for which the R/W flag is 1 in every paging-structure entry controlling the translation and with a protection key for which write access is permitted; data may not be written to any user-mode address with a translation for which the R/W flag is 0 in any paging-structure entry controlling the translation.
      - If CR4.SMAP = 1, access rights depend on the value of EFLAGS.AC and whether the access is implicit or explicit:

        - If EFLAGS.AC = 1 and the access is explicit, data may be written to any user-mode address with a translation for which the R/W flag is 1 in every paging-structure entry controlling the translation and with a protection key for which write access is permitted; data may not be written to any user-mode address with a translation for which the R/W flag is 0 in any paging-structure entry controlling the translation.
        - If EFLAGS.AC = 0 or the access is implicit, data may not be written to any user-mode address.
    - Instruction fetches from supervisor-mode addresses.
        - For 32-bit paging or if IA32_EFER.NXE = 0, instructions may be fetched from any supervisor-mode address.
        - For other paging modes with IA32_EFER.NXE = 1, instructions may be fetched from any supervisor-mode address with a translation for which the XD flag (bit 63) is 0 in every paging-structure entry controlling the translation; instructions may not be fetched from any supervisor-mode address with a translation for which the XD flag is 1 in any paging-structure entry controlling the translation.
    - Instruction fetches from user-mode addresses.
      Access rights depend on the values of CR4.SMEP:
        - If CR4.SMEP = 0, access rights depend on the paging mode and the value of IA32_EFER.NXE:
            - For 32-bit paging or if IA32_EFER.NXE = 0, instructions may be fetched from any user-mode address.
            - For other paging modes with IA32_EFER.NXE = 1, instructions may be fetched from any user-mode address with a translation for which the XD flag is 0 in every paging-structure entry controlling the translation; instructions may not be fetched from any user-mode address with a translation for which the XD flag is 1 in any paging-structure entry controlling the translation.
        - If CR4.SMEP = 1, instructions may not be fetched from any user-mode address.
    - Supervisor-mode shadow-stack accesses are allowed only to supervisor-mode shadow-stack addresses (see above).
- For user-mode accesses:
    - Data reads.
      Access rights depend on the mode of the linear address:
        - Data may be read from any user-mode address with a protection key for which read access is permitted.
        - Data may not be read from any supervisor-mode address.
    - Data writes.
      Access rights depend on the mode of the linear address:
        - Data may be written to any user-mode address with a translation for which the R/W flag is 1 in every paging-structure entry controlling the translation and with a protection key for which write access is permitted.
        - Data may not be written to any supervisor-mode address.
    - Instruction fetches.
      Access rights depend on the mode of the linear address, the paging mode, and the value of IA32_EFER.NXE:
        - For 32-bit paging or if IA32_EFER.NXE = 0, instructions may be fetched from any user-mode address.
        - For other paging modes with IA32_EFER.NXE = 1, instructions may be fetched from any user-mode address with a translation for which the XD flag is 0 in every paging-structure entry controlling the translation.
        - Instructions may not be fetched from any supervisor-mode address.
    - User-mode shadow-stack accesses made outside enclave mode are allowed only to user-mode shadow-stack addresses (see above). User-mode shadow-stack accesses made in enclave mode are treated like ordinary data accesses (see above).

A processor may cache information from the paging-structure entries in TLBs and paging-structure caches (see Section 4.10). These structures may include information about access rights. The processor may enforce access rights based on the TLBs and paging-structure caches instead of on the paging structures in memory.

This fact implies that, if software modifies a paging-structure entry to change access rights, the processor might not use that change for a subsequent access to an affected linear address (see Section 4.10.4.3). See Section 4.10.4.2 for how software can ensure that the processor uses the modified access rights.

4.6.2 Protection Keys

4-level paging and 5-level paging associate a 4-bit protection key with each linear address (the protection key located in bits 62:59 of the paging-structure entry that mapped the page containing the linear address; see Section 4.5). Two protection key features control accesses to linear addresses based on their protection keys:

- If CR4.PKE = 1, the PKRU register determines, for each protection key, whether user-mode addresses with that protection key may be read or written.
- If CR4.PKS = 1, the IA32_PKRS MSR (MSR index 6E1H) determines, for each protection key, whether supervisor-mode addresses with that protection key may be read or written.

32-bit paging and PAE paging do not associate linear addresses with protection keys. For the purposes of Section 4.6.1, reads and writes are implicitly permitted for all protection keys with either of those paging modes.

The PKRU register (protection-key rights for user pages) is a 32-bit register with the following format: for each *i* ($0 \le i \le 15$), PKRU[2*i*] is the **access-disable bit** for protection key *i* (AD*i*); PKRU[2*i*+1] is the **write-disable bit** for protection key *i* (WD*i*). The IA32_PKRS MSR has the same format (bits 63:32 of the MSR are reserved and must be zero).

Software can use the RDPKRU and WRPKRU instructions with ECX = 0 to read and write PKRU. In addition, the PKRU register is XSAVE-managed state and can thus be read and written by instructions in the XSAVE feature set. See Chapter 13, "Managing State Using the XSAVE Feature Set," of *Intel® 64 and IA-32 Architectures Software Developer's Manual, Volume 1* for more information about the XSAVE feature set.

Software can use the RDMSR and WRMSR instructions to read and write the IA32_PKRS MSR. Writes to the IA32_PKRS MSR using WRMSR are not serializing. The IA32_PKRS MSR is not XSAVE-managed.

How a linear address's protection key controls access to the address depends on the mode of the linear address:

- A linear address's protection key controls only data accesses to the address. It does not in any way affect instructions fetches from the address.
- If CR4.PKE = 0, the protection key of a user-mode address does not control data accesses to the address (for the purposes of Section 4.6.1, reads and writes of user-mode addresses are implicitly permitted for all protection keys).

  If CR4.PKE = 1, use of the protection key *i* of a user-mode address depends on the value of the PKRU register:

  — If AD*i* = 1, no data accesses are permitted.

  — If WD*i* = 1, permission may be denied to certain data write accesses:

    - User-mode write accesses are not permitted.
    - Supervisor-mode write accesses are not permitted if CR0.WP = 1. (If CR0.WP = 0, WD*i* does not affect supervisor-mode write accesses to user-mode addresses with protection key *i*.)
- If CR4.PKS = 0, the protection key of a supervisor-mode address does not control data accesses to the address (for the purposes of Section 4.6.1, reads and writes of supervisor-mode addresses are implicitly permitted for all protection keys).

  If CR4.PKS = 1, use of the protection key *i* of a supervisor-mode address depends on the value of the IA32_PKRS MSR:

  — If AD*i* = 1, no data accesses are permitted.

  — If WD*i* = 1, write accesses are not permitted if CR0.WP = 1. (If CR0.WP = 0, IA32_PKRS.WD*i* does not affect write accesses to supervisor-mode addresses with protection key *i*.)

Protection keys apply to shadow-stack accesses just as they do to ordinary data accesses.

4.7 PAGE-FAULT EXCEPTIONS

Accesses using linear addresses may cause **page-fault exceptions** (#PF; exception 14). An access to a linear address may cause a page-fault exception for either of two reasons: (1) there is no translation for the linear address; or (2) there is a translation for the linear address, but its access rights do not permit the access.

As noted in Section 4.3, Section 4.4.2, and Section 4.5, there is no translation for a linear address if the translation process for that address would use a paging-structure entry in which the P flag (bit 0) is 0 or one that sets a reserved bit.[1] If there is a translation for a linear address, its access rights are determined as specified in Section 4.6.

When Intel® Software Guard Extensions (Intel® SGX) are enabled, the processor may deliver exception 14 for reasons unrelated to paging. See Section 35.3, "Access-control Requirements" and Section 35.20, "Enclave Page Cache Map (EPCM)" in Chapter 35, "Enclave Access Control and Data Structures." Such an exception is called an **SGX-induced page fault**. The processor uses the error code to distinguish SGX-induced page faults from ordinary page faults.

Figure 4-12 illustrates the error code that the processor provides on delivery of a page-fault exception. The following items explain how the bits in the error code describe the nature of the page-fault exception:

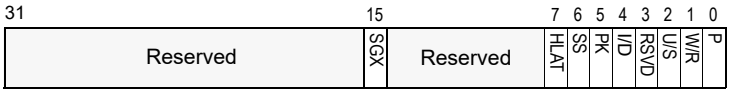

P
0 The fault was caused by a non-present page.
1 The fault was caused by a page-level protection violation.

W/R
0 The access causing the fault was a read.
1 The access causing the fault was a write.

U/S
0 A supervisor-mode access caused the fault.
1 A user-mode access caused the fault.

RSVD
0 The fault was not caused by reserved bit violation.
1 The fault was caused by a reserved bit set to 1 in some paging-structure entry.

I/D
0 The fault was not caused by an instruction fetch.
1 The fault was caused by an instruction fetch.

PK
0 The fault was not caused by protection keys.
1 There was a protection-key violation.

SS
0 The fault was not caused by a shadow-stack access.
1 The fault was caused by a shadow-stack access.

HLAT
0 The fault occurred during ordinary paging or due to access rights.
1 The fault occurred during HLAT paging.

SGX
0 The fault is not related to SGX.
1 The fault resulted from violation of SGX-specific access-control requirements.

Figure 4-12. Page-Fault Error Code

- P flag (bit 0).
  This flag is 0 if there is no translation for the linear address because the P flag was 0 in one of the paging-structure entries used to translate that address.

1. If HLAT paging encounters a paging-structure entry that sets a reserved bit, there is no translation even if the bit 11 of the entry indicates a restart. In this case, there is a page fault and the translation is not restarted.

- W/R (bit 1).
  If the access causing the page-fault exception was a write, this flag is 1; otherwise, it is 0. This flag describes the access causing the page-fault exception, not the access rights specified by paging.
- U/S (bit 2).
  If a user-mode access caused the page-fault exception, this flag is 1; it is 0 if a supervisor-mode access did so. This flag describes the access causing the page-fault exception, not the access rights specified by paging. User-mode and supervisor-mode accesses are defined in Section 4.6.
- RSVD flag (bit 3).
  This flag is 1 if there is no translation for the linear address because a reserved bit was set in one of the paging-structure entries used to translate that address. (Because reserved bits are not checked in a paging-structure entry whose P flag is 0, bit 3 of the error code can be set only if bit 0 is also set.[1])

  Bits reserved in the paging-structure entries are reserved for future functionality. Software developers should be aware that such bits may be used in the future and that a paging-structure entry that causes a page-fault exception on one processor might not do so in the future.
- I/D flag (bit 4).
  This flag is 1 if (1) the access causing the page-fault exception was an instruction fetch; and (2) either (a) CR4.SMEP = 1; or (b) both (i) CR4.PAE = 1 (either PAE paging, 4-level paging, or 5-level paging is in use); and (ii) IA32_EFER.NXE = 1. Otherwise, the flag is 0. This flag describes the access causing the page-fault exception, not the access rights specified by paging.
- PK flag (bit 5).
  This flag is 1 only for data accesses and only with 4-level paging and 5-level paging. In these cases, the setting depends on the mode of the address being accessed:
  - For accesses to supervisor-mode addresses, the flag is set if (1) CR4.PKS = 1; (2) the linear address has protection key *i*; and (3) the IA32_PKRS MSR (see Section 4.6.2) is such that either (a) AD*i* = 1; or (b) the following all hold: (i) WD*i* = 1; (ii) the access is a write access; and (iii) either CR0.WP = 1 or the access causing the page-fault exception was a user-mode access. (Note that this flag may be set on page faults due to user-mode accesses to supervisor-mode addresses.)
  - For accesses to user-mode addresses, the flag is set if (1) CR4.PKE = 1; (2) the linear address has protection key *i*; and (3) the PKRU register (see Section 4.6.2) is such that either (a) AD*i* = 1; or (b) the following all hold: (i) WD*i* = 1; (ii) the access is a write access; and (iii) either CR0.WP = 1 or the access causing the page-fault exception was a user-mode access.
- SS (bit 6).
  If the access causing the page-fault exception was a shadow-stack access (including shadow-stack accesses in enclave mode), this flag is 1; otherwise, it is 0. This flag describes the access causing the page-fault exception, not the access rights specified by paging.
- HLAT (bit 7).
  This flag is 1 if there is no translation for the linear address using HLAT paging because, in one of the paging-structure entries used to translate that address, either the P flag was 0 or a reserved bit was set. An error code will set this flag only if it clears bit 0 or sets bit 3. This flag will not be set by a page fault resulting from a violation of access rights, nor for one encountered during ordinary paging, including the case in which there has been a restart of HLAT paging.
- SGX flag (bit 15).
  This flag is 1 if the exception is unrelated to paging and resulted from violation of SGX-specific access-control requirements. Because such a violation can occur only if there is no ordinary page fault, this flag is set only if the P flag (bit 0) is 1 and the RSVD flag (bit 3) and the PK flag (bit 5) are both 0.

Page-fault exceptions occur only due to an attempt to use a linear address. Failures to load the PDPTE registers with PAE paging (see Section 4.4.1) cause general-protection exceptions (#GP(0)) and not page-fault exceptions.

1. Some past processors had errata for some page faults that occur when there is no translation for the linear address because the P flag was 0 in one of the paging-structure entries used to translate that address. Due to these errata, some such page faults produced error codes that cleared bit 0 (P flag) and set bit 3 (RSVD flag).

4.8 ACCESSED AND DIRTY FLAGS

For any paging-structure entry that is used during linear-address translation, bit 5 is the **accessed** flag.[1] For paging-structure entries that map a page (as opposed to referencing another paging structure), bit 6 is the **dirty** flag. These flags are provided for use by memory-management software to manage the transfer of pages and paging structures into and out of physical memory.

Whenever the processor uses a paging-structure entry as part of linear-address translation, it sets the accessed flag in that entry (if it is not already set).

Whenever there is a write to a linear address, the processor sets the dirty flag (if it is not already set) in the paging-structure entry that identifies the final physical address for the linear address (either a PTE or a paging-structure entry in which the PS flag is 1).

The previous two paragraphs apply also to HLAT paging. If HLAT paging encounters a paging-structure entry that sets bit 11, indicating a restart, the processor will set the accessed flag in that entry; it will not set the dirty flag because, if an entry indicates a restart, it does identify the final physical address for the linear address being translated.

NOTE

If software on one logical processor writes to a page while software on another logical processor concurrently clears the R/W flag in the paging-structure entry that maps the page, execution on some processors may result in the entry's dirty flag being set (due to the write on the first logical processor) and the entry's R/W flag being clear (due to the update to the entry on the second logical processor). This will never occur on a processor that supports control-flow enforcement technology (CET). Specifically, a processor that supports CET will never set the dirty flag in a paging-structure entry in which the R/W flag is clear.

Memory-management software may clear these flags when a page or a paging structure is initially loaded into physical memory. These flags are "sticky," meaning that, once set, the processor does not clear them; only software can clear them.

A processor may cache information from the paging-structure entries in TLBs and paging-structure caches (see Section 4.10). This fact implies that, if software changes an accessed flag or a dirty flag from 1 to 0, the processor might not set the corresponding bit in memory on a subsequent access using an affected linear address (see Section 4.10.4.3). See Section 4.10.4.2 for how software can ensure that these bits are updated as desired.

NOTE

The accesses used by the processor to set these flags may or may not be exposed to the processor's self-modifying code detection logic. If the processor is executing code from the same memory area that is being used for the paging structures, the setting of these flags may or may not result in an immediate change to the executing code stream.

4.9 PAGING AND MEMORY TYPING

The **memory type** of a memory access refers to the type of caching used for that access. Chapter 12, "Memory Cache Control" provides many details regarding memory typing in the Intel-64 and IA-32 architectures. This section describes how paging contributes to the determination of memory typing.

The way in which paging contributes to memory typing depends on whether the processor supports the **Page Attribute Table** (**PAT**; see Section 12.12).[2] Section 4.9.1 and Section 4.9.2 explain how paging contributes to memory typing depending on whether the PAT is supported.

---

1. With PAE paging, the PDPTEs are not used during linear-address translation but only to load the PDPTE registers for some executions of the MOV CR instruction (see Section 4.4.1). For this reason, the PDPTEs do not contain accessed flags with PAE paging.
2. The PAT is supported on Pentium III and more recent processor families. See Section 4.1.4 for how to determine whether the PAT is supported.

4.9.1 Paging and Memory Typing When the PAT is Not Supported (Pentium Pro and Pentium II Processors)

NOTE

The PAT is supported on all processors that support 4-level paging or 5-level paging. Thus, this section applies only to 32-bit paging and PAE paging.

If the PAT is not supported, paging contributes to memory typing in conjunction with the memory-type range registers (MTRRs) as specified in Table 12-6 in Section 12.5.2.1.

For any access to a physical address, the table combines the memory type specified for that physical address by the MTRRs with a PCD value and a PWT value. The latter two values are determined as follows:

- For an access to a PDE with 32-bit paging, the PCD and PWT values come from CR3.
- For an access to a PDE with PAE paging, the PCD and PWT values come from the relevant PDPTE register.
- For an access to a PTE, the PCD and PWT values come from the relevant PDE.
- For an access to the physical address that is the translation of a linear address, the PCD and PWT values come from the relevant PTE (if the translation uses a 4-KByte page) or the relevant PDE (otherwise).
- With PAE paging, the UC memory type is used when loading the PDPTEs (see Section 4.4.1).

4.9.2 Paging and Memory Typing When the PAT is Supported (Pentium III and More Recent Processor Families)

If the PAT is supported, paging contributes to memory typing in conjunction with the PAT and the memory-type range registers (MTRRs) as specified in Table 12-7 in Section 12.5.2.2.

The PAT is a 64-bit MSR (IA32_PAT; MSR index 277H) comprising eight (8) 8-bit entries (entry *i* comprises bits 8*i*+7:8*i* of the MSR).

For any access to a physical address, the table combines the memory type specified for that physical address by the MTRRs with a memory type selected from the PAT. Table 12-11 in Section 12.12.3 specifies how a memory type is selected from the PAT. Specifically, it comes from entry *i* of the PAT, where *i* is defined as follows:

- For an access to an entry in a paging structure whose address is in CR3 (e.g., the PML4 table with 4-level paging):
  - For 4-level paging or 5-level paging with CR4.PCIDE = 1, *i* = 0.
  - Otherwise, *i* = 2*PCD+PWT, where the PCD and PWT values come from CR3.
- For an access to a PDE with PAE paging, *i* = 2*PCD+PWT, where the PCD and PWT values come from the relevant PDPTE register.
- For an access to a paging-structure entry X whose address is in another paging-structure entry Y, *i* = 2*PCD+PWT, where the PCD and PWT values come from Y.
- For an access to the physical address that is the translation of a linear address, *i* = 4*PAT+2*PCD+PWT, where the PAT, PCD, and PWT values come from the relevant PTE (if the translation uses a 4-KByte page), the relevant PDE (if the translation uses a 2-MByte page or a 4-MByte page), or the relevant PDPTE (if the translation uses a 1-GByte page).
- With PAE paging, the WB memory type is used when loading the PDPTEs (see Section 4.4.1).[1]

1. Some older IA-32 processors used the UC memory type when loading the PDPTEs. Some processors may use the UC memory type if CR0.CD = 1 or if the MTRRs are disabled. These behaviors are model-specific and not architectural.

4.9.3 Caching Paging-Related Information about Memory Typing

A processor may cache information from the paging-structure entries in TLBs and paging-structure caches (see Section 4.10). These structures may include information about memory typing. The processor may use memory-typing information from the TLBs and paging-structure caches instead of from the paging structures in memory.

This fact implies that, if software modifies a paging-structure entry to change the memory-typing bits, the processor might not use that change for a subsequent translation using that entry or for access to an affected linear address. See Section 4.10.4.2 for how software can ensure that the processor uses the modified memory typing.

4.10 CACHING TRANSLATION INFORMATION

The Intel-64 and IA-32 architectures may accelerate the address-translation process by caching data from the paging structures on the processor. Because the processor does not ensure that the data that it caches are always consistent with the structures in memory, it is important for software developers to understand how and when the processor may cache such data. They should also understand what actions software can take to remove cached data that may be inconsistent and when it should do so. This section provides software developers information about the relevant processor operation.

Section 4.10.1 introduces process-context identifiers (PCIDs), which a logical processor may use to distinguish information cached for different linear-address spaces. Section 4.10.2 and Section 4.10.3 describe how the processor may cache information in translation lookaside buffers (TLBs) and paging-structure caches, respectively. Section 4.10.4 explains how software can remove inconsistent cached information by invalidating portions of the TLBs and paging-structure caches. Section 4.10.5 describes special considerations for multiprocessor systems.

4.10.1 Process-Context Identifiers (PCIDs)

Process-context identifiers (**PCIDs**) are a facility by which a logical processor may cache information for multiple linear-address spaces. The processor may retain cached information when software switches to a different linear-address space with a different PCID (e.g., by loading CR3; see Section 4.10.4.1 for details).

A PCID is a 12-bit identifier. Non-zero PCIDs are enabled by setting the PCIDE flag (bit 17) of CR4. If CR4.PCIDE = 0, the current PCID is always 000H; otherwise, the current PCID is the value of bits 11:0 of CR3.[1] Not all processors allow CR4.PCIDE to be set to 1; see Section 4.1.4 for how to determine whether this is allowed.

The processor ensures that CR4.PCIDE can be 1 only in IA-32e mode (thus, 32-bit paging and PAE paging use only PCID 000H). In addition, software can change CR4.PCIDE from 0 to 1 only if CR3[11:0] = 000H. These requirements are enforced by the following limitations on the MOV CR instruction:

- MOV to CR4 causes a general-protection exception (#GP) if it would change CR4.PCIDE from 0 to 1 and either IA32_EFER.LMA = 0 or CR3[11:0] ≠ 000H.
- MOV to CR0 causes a general-protection exception if it would clear CR0.PG to 0 while CR4.PCIDE = 1.

When a logical processor creates entries in the TLBs (Section 4.10.2) and paging-structure caches (Section 4.10.3), it associates those entries with the current PCID. When using entries in the TLBs and paging-structure caches to translate a linear address, a logical processor uses only those entries associated with the current PCID (see Section 4.10.2.4 for an exception).

If CR4.PCIDE = 0, a logical processor does not cache information for any PCID other than 000H. This is because (1) if CR4.PCIDE = 0, the logical processor will associate any newly cached information with the current PCID, 000H; and (2) if MOV to CR4 clears CR4.PCIDE, all cached information is invalidated (see Section 4.10.4.1).

1. Note that, while HLAT paging (Section 4.5.3) does not use CR3 to locate the first paging structure, it does use the PCID in CR3[11:0] when CR4.PCIDE = 1.

NOTE

In revisions of this manual that were produced when no processors allowed CR4.PCIDE to be set to 1, the Section "Caching Translation Information" discussed the caching of translation information without any reference to PCIDs. While the section now refers to PCIDs in its specification of this caching, this documentation change is not intended to imply any change to the behavior of processors that do not allow CR4.PCIDE to be set to 1.

4.10.2 Translation Lookaside Buffers (TLBs)

A processor may cache information about the translation of linear addresses in translation lookaside buffers (TLBs). In general, TLBs contain entries that map page numbers to page frames; these terms are defined in Section 4.10.2.1. Section 4.10.2.2 describes how information may be cached in TLBs, and Section 4.10.2.3 gives details of TLB usage. Section 4.10.2.4 explains the global-page feature, which allows software to indicate that certain translations should receive special treatment when cached in the TLBs.

4.10.2.1 Page Numbers, Page Frames, and Page Offsets

Section 4.3, Section 4.4.2, and Section 4.5 give details of how the different paging modes translate linear addresses to physical addresses. Specifically, the upper bits of a linear address (called the **page number**) determine the upper bits of the physical address (called the **page frame**); the lower bits of the linear address (called the **page offset**) determine the lower bits of the physical address. The boundary between the page number and the page offset is determined by the **page size**. Specifically:

- 32-bit paging:
  - If the translation does not use a PTE (because CR4.PSE = 1 and the PS flag is 1 in the PDE used), the page size is 4 MBytes and the page number comprises bits 31:22 of the linear address.
  - If the translation does use a PTE, the page size is 4 KBytes and the page number comprises bits 31:12 of the linear address.
- PAE paging:
  - If the translation does not use a PTE (because the PS flag is 1 in the PDE used), the page size is 2 MBytes and the page number comprises bits 31:21 of the linear address.
  - If the translation does use a PTE, the page size is 4 KBytes and the page number comprises bits 31:12 of the linear address.
- 4-level paging and 5-level paging:
  - If the translation does not use a PDE (because the PS flag is 1 in the PDPTE used), the page size is 1 GByte and the page number comprises bits 47:30 of the linear address.
  - If the translation does use a PDE but does not uses a PTE (because the PS flag is 1 in the PDE used), the page size is 2 MBytes and the page number comprises bits 47:21 of the linear address.
  - If the translation does use a PTE, the page size is 4 KBytes and the page number comprises bits 47:12 of the linear address.
  - The page size identified by the preceding items may be reduced if there has been a restart of HLAT paging (see Section 4.5.5). Restart of HLAT paging always specifies a maximum page size; this page size is determined by the level of the paging-structure entry that caused the restart. The page size used by the translation is the minimum of the maximum page size specified by the restart and the page size determined by the restarted translation (as specified by the previous items).

    For example, suppose that HLAT paging encounters a PDE that sets bit 11, indicating a restart. As a result, the restart uses a maximum page size of 2 MBytes. Suppose that the restarted translation encounters a PDPTE that sets bit 7, indicating a 1-GByte page. In this case, the translation produced will have a page size of 2 MBytes (the smaller of the two sizes).

4.10.2.2 Caching Translations in TLBs

The processor may accelerate the paging process by caching individual translations in **translation lookaside buffers** (**TLBs**). Each entry in a TLB is an individual translation. Each translation is referenced by a page number. It contains the following information from the paging-structure entries used to translate linear addresses with the page number:

- The physical address corresponding to the page number (the page frame).
- The access rights from the paging-structure entries used to translate linear addresses with the page number (see Section 4.6):
  - The logical-AND of the R/W flags.
  - The logical-AND of the U/S flags.
  - The logical-OR of the XD flags (necessary only if IA32_EFER.NXE = 1).
  - The protection key (only with 4-level paging and 5-level paging).
- Attributes from a paging-structure entry that identifies the final page frame for the page number (either a PTE or a paging-structure entry in which the PS flag is 1):
  - The dirty flag (see Section 4.8).
  - The memory type (see Section 4.9).

(TLB entries may contain other information as well. A processor may implement multiple TLBs, and some of these may be for special purposes, e.g., only for instruction fetches. Such special-purpose TLBs may not contain some of this information if it is not necessary. For example, a TLB used only for instruction fetches need not contain information about the R/W and dirty flags.)

As noted in Section 4.10.1, any TLB entries created by a logical processor are associated with the current PCID.

Processors need not implement any TLBs. Processors that do implement TLBs may invalidate any TLB entry at any time. Software should not rely on the existence of TLBs or on the retention of TLB entries.

4.10.2.3 Details of TLB Use

Because the TLBs cache entries only for linear addresses with translations, there can be a TLB entry for a page number only if the P flag is 1 and the reserved bits are 0 in each of the paging-structure entries used to translate that page number. In addition, the processor does not cache a translation for a page number unless the accessed flag is 1 in each of the paging-structure entries used during translation; before caching a translation, the processor sets any of these accessed flags that is not already 1.

Subject to the limitations given in the previous paragraph, the processor may cache a translation for any linear address, even if that address is not used to access memory. For example, the processor may cache translations required for prefetches and for accesses that result from speculative execution that would never actually occur in the executed code path.

If the page number of a linear address corresponds to a TLB entry associated with the current PCID, the processor may use that TLB entry to determine the page frame, access rights, and other attributes for accesses to that linear address. In this case, the processor may not actually consult the paging structures in memory. The processor may retain a TLB entry unmodified even if software subsequently modifies the relevant paging-structure entries in memory. See Section 4.10.4.2 for how software can ensure that the processor uses the modified paging-structure entries.

If the paging structures specify a translation using a page larger than 4 KBytes, some processors may cache multiple smaller-page TLB entries for that translation. Each such TLB entry would be associated with a page number corresponding to the smaller page size (e.g., bits 47:12 of a linear address with 4-level paging), even though part of that page number (e.g., bits 20:12) is part of the offset with respect to the page specified by the paging structures. The upper bits of the physical address in such a TLB entry are derived from the physical address in the PDE used to create the translation, while the lower bits come from the linear address of the access for which the translation is created. There is no way for software to be aware that multiple translations for smaller pages have been used for a large page. For example, an execution of INVLPG for a linear address on such a page invalidates any and all smaller-page TLB entries for the translation of any linear address on that page.

If software modifies the paging structures so that the page size used for a 4-KByte range of linear addresses changes, the TLBs may subsequently contain multiple translations for the address range (one for each page size). A reference to a linear address in the address range may use any of these translations. Which translation is used may vary from one execution to another, and the choice may be implementation-specific.

4.10.2.4 Global Pages

The Intel-64 and IA-32 architectures also allow for **global pages** when the PGE flag (bit 7) is 1 in CR4. If the G flag (bit 8) is 1 in a paging-structure entry that maps a page (either a PTE or a paging-structure entry in which the PS flag is 1), any TLB entry cached for a linear address using that paging-structure entry is considered to be **global**. Because the G flag is used only in paging-structure entries that map a page, and because information from such entries is not cached in the paging-structure caches, the global-page feature does not affect the behavior of the paging-structure caches.

A logical processor may use a global TLB entry to translate a linear address, even if the TLB entry is associated with a PCID different from the current PCID.

4.10.3 Paging-Structure Caches

In addition to the TLBs, a processor may cache other information about the paging structures in memory.

4.10.3.1 Caches for Paging Structures

A processor may support any or all of the following paging-structure caches:

- **PML5E cache** (5-level paging only). Each PML5E-cache entry is referenced by a 9-bit value and is used for linear addresses for which bits 56:48 have that value. The entry contains information from the PML5E used to translate such linear addresses:
  - The physical address from the PML5E (the address of the PML4 table).
  - The value of the R/W flag of the PML5E.
  - The value of the U/S flag of the PML5E.
  - The value of the XD flag of the PML5E.
  - The values of the PCD and PWT flags of the PML5E.

  The following items detail how a processor may use the PML5E cache:
  - If the processor has a PML5E-cache entry for a linear address, it may use that entry when translating the linear address (instead of the PML5E in memory).
  - The processor does not create a PML5E-cache entry unless the P flag is 1 and all reserved bits are 0 in the PML5E in memory.
  - The processor does not create a PML5E-cache entry unless the accessed flag is 1 in the PML5E in memory; before caching a translation, the processor sets the accessed flag if it is not already 1.
  - The processor may create a PML5E-cache entry even if there are no translations for any linear address that might use that entry (e.g., because the P flags are 0 in all entries in the referenced PML4 table).
  - If the processor creates a PML5E-cache entry, the processor may retain it unmodified even if software subsequently modifies the corresponding PML5E in memory.
- **PML4E cache** (4-level paging and 5-level paging only). The use of the PML4E cache depends on the paging mode:
  - For 4-level paging, each PML4E-cache entry is referenced by a 9-bit value and is used for linear addresses for which bits 47:39 have that value.
  - For 5-level paging, each PML4E-cache entry is referenced by an 18-bit value and is used for linear addresses for which bits 56:39 have that value.

  A PML4E-cache entry contains information from the PML5E and PML4E used to translate the relevant linear addresses (for 4-level paging, the PML5E does not apply):

— The physical address from the PML4E (the address of the page-directory-pointer table).

— The logical-AND of the R/W flags in the PML5E and the PML4E.

— The logical-AND of the U/S flags in the PML5E and the PML4E.

— The logical-OR of the XD flags in the PML5E and the PML4E.

— The values of the PCD and PWT flags of the PML4E.

The following items detail how a processor may use the PML4E cache:

— If the processor has a PML4E-cache entry for a linear address, it may use that entry when translating the linear address (instead of the PML5E and PML4E in memory).

— The processor does not create a PML4E-cache entry unless the P flags are 1 and all reserved bits are 0 in the PML5E and the PML4E in memory.

— The processor does not create a PML4E-cache entry unless the accessed flags are 1 in the PML5E and the PML4E in memory; before caching a translation, the processor sets any accessed flags that are not already 1.

— The processor may create a PML4E-cache entry even if there are no translations for any linear address that might use that entry (e.g., because the P flags are 0 in all entries in the referenced page-directory-pointer table).

— If the processor creates a PML4E-cache entry, the processor may retain it unmodified even if software subsequently modifies the corresponding PML4E in memory.

- **PDPTE cache** (4-level paging and 5-level paging only).[1] The use of the PML4E cache depends on the paging mode:

  — For 4-level paging, each PDPTE-cache entry is referenced by an 18-bit value and is used for linear addresses for which bits 47:30 have that value.

  — For 5-level paging, each PDPTE-cache entry is referenced by a 27-bit value and is used for linear addresses for which bits 56:30 have that value.

  A PDPTE-cache entry contains information from the PML5E, PML4E, PDPTE used to translate the relevant linear addresses (for 4-level paging, the PML5E does not apply):

  — The physical address from the PDPTE (the address of the page directory). (No PDPTE-cache entry is created for a PDPTE that maps a 1-GByte page.)

  — The logical-AND of the R/W flags in the PML5E, PML4E, and PDPTE.

  — The logical-AND of the U/S flags in the PML5E, PML4E, and PDPTE.

  — The logical-OR of the XD flags in the PML5E, PML4E, and PDPTE.

  — The values of the PCD and PWT flags of the PDPTE.

  The following items detail how a processor may use the PDPTE cache:

  — If the processor has a PDPTE-cache entry for a linear address, it may use that entry when translating the linear address (instead of the PML5E, PML4E, and PDPTE in memory).

  — The processor does not create a PDPTE-cache entry unless the P flags are 1, the PS flags are 0, and the reserved bits are 0 in the PML5E, PML4E, and PDPTE in memory.

  — The processor does not create a PDPTE-cache entry unless the accessed flags are 1 in the PML5E, PML4E, and PDPTE in memory; before caching a translation, the processor sets any accessed flags that are not already 1.

  — The processor may create a PDPTE-cache entry even if there are no translations for any linear address that might use that entry.

  — If the processor creates a PDPTE-cache entry, the processor may retain it unmodified even if software subsequently modifies the corresponding PML5E, PML4E, or PDPTE in memory.

1. With PAE paging, the PDPTEs are stored in internal, non-architectural registers. The operation of these registers is described in Section 4.4.1 and differs from that described here.

- **PDE cache**. The use of the PDE cache depends on the paging mode:
  - For 32-bit paging, each PDE-cache entry is referenced by a 10-bit value and is used for linear addresses for which bits 31:22 have that value.
  - For PAE paging, each PDE-cache entry is referenced by an 11-bit value and is used for linear addresses for which bits 31:21 have that value.
  - For 4-level paging, each PDE-cache entry is referenced by a 27-bit value and is used for linear addresses for which bits 47:21 have that value.
  - For 5-level paging, each PDE-cache entry is referenced by a 36-bit value and is used for linear addresses for which bits 56:21 have that value.

  A PDE-cache entry contains information from the PML5E, PML4E, PDPTE, and PDE used to translate the relevant linear addresses (for 32-bit paging and PAE paging, only the PDE applies; for 4-level paging, the PML5E does not apply):
  - The physical address from the PDE (the address of the page table). (No PDE-cache entry is created for a PDE that maps a page.)
  - The logical-AND of the R/W flags in the PML5E, PML4E, PDPTE, and PDE.
  - The logical-AND of the U/S flags in the PML5E, PML4E, PDPTE, and PDE.
  - The logical-OR of the XD flags in the PML5E, PML4E, PDPTE, and PDE.
  - The values of the PCD and PWT flags of the PDE.

  The following items detail how a processor may use the PDE cache (references below to PML5Es, PML4Es, and PDPTEs apply only to 4-level paging and to 5-level paging, as appropriate):
  - If the processor has a PDE-cache entry for a linear address, it may use that entry when translating the linear address (instead of the PML5E, PML4E, PDPTE, and PDE in memory).
  - The processor does not create a PDE-cache entry unless the P flags are 1, the PS flags are 0, and the reserved bits are 0 in the PML5E, PML4E, PDPTE, and PDE in memory.
  - The processor does not create a PDE-cache entry unless the accessed flag is 1 in the PML5E, PML4E, PDPTE, and PDE in memory; before caching a translation, the processor sets any accessed flags that are not already 1.
  - The processor may create a PDE-cache entry even if there are no translations for any linear address that might use that entry.
  - If the processor creates a PDE-cache entry, the processor may retain it unmodified even if software subsequently modifies the corresponding PML5E, PML4E, PDPTE, or PDE in memory.

Information from a paging-structure entry can be included in entries in the paging-structure caches for other paging-structure entries referenced by the original entry. For example, if the R/W flag is 0 in a PML4E, then the R/W flag will be 0 in any PDPTE-cache entry for a PDPTE from the page-directory-pointer table referenced by that PML4E. This is because the R/W flag of each such PDPTE-cache entry is the logical-AND of the R/W flags in the appropriate PML4E and PDPTE.

On processors that support HLAT paging (see Section 4.5.1), each entry in a paging-structure cache indicates whether the entry was cached during ordinary paging or HLAT paging. When the processor commences linear-address translation using ordinary paging (respectively, HLAT paging), it will use only entries that indicate that they were cached during ordinary paging (respectively, HLAT paging).

Entries that were cached during HLAT paging also include the restart flag (bit 11) of the original paging-structure entry. When the processor commences HLAT paging using such an entry, it immediately restarts (using ordinary paging) if this cached restart flag is 1.

The paging-structure caches contain information only from paging-structure entries that reference other paging structures (and not those that map pages). Because the G flag is not used in such paging-structure entries, the global-page feature does not affect the behavior of the paging-structure caches.

The processor may create entries in paging-structure caches for translations required for prefetches and for accesses that are a result of speculative execution that would never actually occur in the executed code path.

As noted in Section 4.10.1, any entries created in paging-structure caches by a logical processor are associated with the current PCID.

A processor may or may not implement any of the paging-structure caches. Software should rely on neither their presence nor their absence. The processor may invalidate entries in these caches at any time. Because the processor may create the cache entries at the time of translation and not update them following subsequent modifications to the paging structures in memory, software should take care to invalidate the cache entries appropriately when causing such modifications. The invalidation of TLBs and the paging-structure caches is described in Section 4.10.4.

4.10.3.2 Using the Paging-Structure Caches to Translate Linear Addresses

When a linear address is accessed, the processor uses a procedure such as the following to determine the physical address to which it translates and whether the access should be allowed:

- If the processor finds a TLB entry that is for the page number of the linear address and that is associated with the current PCID (or which is global), it may use the physical address, access rights, and other attributes from that entry.
- If the processor does not find a relevant TLB entry, it may use the upper bits of the linear address to select an entry from the PDE cache that is associated with the current PCID (Section 4.10.3.1 indicates which bits are used in each paging mode). It can then use that entry to complete the translation process (locating a PTE, etc.) as if it had traversed the PDE (and, for 4-level paging and 5-level paging, the PDPTE, PML4E, and PML5E, as appropriate) corresponding to the PDE-cache entry.
- The following items apply when 4-level paging or 5-level paging is used:
  - If the processor does not find a relevant TLB entry or PDE-cache entry, it may use the upper bits of the linear address (for 4-level paging, bits 47:30; for 5-level paging, bits 56:30) to select an entry from the PDPTE cache that is associated with the current PCID. It can then use that entry to complete the translation process (locating a PDE, etc.) as if it had traversed the PDPTE, the PML4E, and (for 5-level paging) the PML5E corresponding to the PDPTE-cache entry.
  - If the processor does not find a relevant TLB entry, PDE-cache entry, or PDPTE-cache entry, it may use the upper bits of the linear address (for 4-level paging, bits 47:39; for 5-level paging, bits 56:39) to select an entry from the PML4E cache that is associated with the current PCID. It can then use that entry to complete the translation process (locating a PDPTE, etc.) as if it had traversed the corresponding PML4E.
  - With 5-level paging, if the processor does not find a relevant TLB entry, PDE-cache entry, PDPTE-cache entry, or PML4E-cache entry, it may use bits 56:48 of the linear address to select an entry from the PML5E cache that is associated with the current PCID. It can then use that entry to complete the translation process (locating a PML4E, etc.) as if it had traversed the corresponding PML5E.

(Any of the above steps would be skipped if the processor does not support the cache in question.)

If the processor does not find a TLB or paging-structure-cache entry for the linear address, it uses the linear address to traverse the entire paging-structure hierarchy, as described in Section 4.3, Section 4.4.2, and Section 4.5.

4.10.3.3 Multiple Cached Entries for a Single Paging-Structure Entry

The paging-structure caches and TLBs may contain multiple entries associated with a single PCID and with information derived from a single paging-structure entry. The following items give some examples for 4-level paging:

- Suppose that two PML4Es contain the same physical address and thus reference the same page-directory-pointer table. Any PDPTE in that table may result in two PDPTE-cache entries, each associated with a different set of linear addresses. Specifically, suppose that the n_1^{th} and n_2^{th} entries in the PML4 table contain the same physical address. This implies that the physical address in the mth PDPTE in the page-directory-pointer table would appear in the PDPTE-cache entries associated with both p_1 and p_2, where $(p_1 \gg 9) = n_1$, $(p_2 \gg 9) = n_2$, and $(p_1 \& 1FFH) = (p_2 \& 1FFH) = m$. This is because both PDPTE-cache entries use the same PDPTE, one resulting from a reference from the n_1^{th} PML4E and one from the n_2^{th} PML4E.
- Suppose that the first PML4E (i.e., the one in position 0) contains the physical address X in CR3 (the physical address of the PML4 table). This implies the following:

— Any PML4-cache entry associated with linear addresses with 0 in bits 47:39 contains address X.

— Any PDPTE-cache entry associated with linear addresses with 0 in bits 47:30 contains address X. This is because the translation for a linear address for which the value of bits 47:30 is 0 uses the value of bits 47:39 (0) to locate a page-directory-pointer table at address X (the address of the PML4 table). It then uses the value of bits 38:30 (also 0) to find address X again and to store that address in the PDPTE-cache entry.

— Any PDE-cache entry associated with linear addresses with 0 in bits 47:21 contains address X for similar reasons.

— Any TLB entry for page number 0 (associated with linear addresses with 0 in bits 47:12) translates to page frame X » 12 for similar reasons.

The same PML4E contributes its address X to all these cache entries because the self-referencing nature of the entry causes it to be used as a PML4E, a PDPTE, a PDE, and a PTE.

4.10.4 Invalidation of TLBs and Paging-Structure Caches

As noted in Section 4.10.2 and Section 4.10.3, the processor may create entries in the TLBs and the paging-structure caches when linear addresses are translated, and it may retain these entries even after the paging structures used to create them have been modified. To ensure that linear-address translation uses the modified paging structures, software should take action to invalidate any cached entries that may contain information that has since been modified.

4.10.4.1 Operations that Invalidate TLBs and Paging-Structure Caches

The following instructions invalidate entries in the TLBs and the paging-structure caches:

- INVLPG. This instruction takes a single operand, which is a linear address. The instruction invalidates any TLB entries that are for a page number corresponding to the linear address and that are associated with the current PCID. It also invalidates any global TLB entries with that page number, regardless of PCID (see Section 4.10.2.4).[1] INVLPG also invalidates all entries in all paging-structure caches associated with the current PCID, regardless of the linear addresses to which they correspond.
- INVPCID. The operation of this instruction is based on instruction operands, called the INVPCID type and the INVPCID descriptor. Four INVPCID types are currently defined:
  — Individual-address. If the INVPCID type is 0, the logical processor invalidates mappings—except global translations—associated with the PCID specified in the INVPCID descriptor and that would be used to translate the linear address specified in the INVPCID descriptor.[2] (The instruction may also invalidate global translations, as well as mappings associated with other PCIDs and for other linear addresses.)
  — Single-context. If the INVPCID type is 1, the logical processor invalidates all mappings—except global translations—associated with the PCID specified in the INVPCID descriptor. (The instruction may also invalidate global translations, as well as mappings associated with other PCIDs.)
  — All-context, including globals. If the INVPCID type is 2, the logical processor invalidates mappings—including global translations—associated with all PCIDs.
  — All-context. If the INVPCID type is 3, the logical processor invalidates mappings—except global translations—associated with all PCIDs. (The instruction may also invalidate global translations.)

  See Chapter 3 of the *Intel 64 and IA-32 Architecture Software Developer's Manual, Volume 2A* for details of the INVPCID instruction.
- MOV to CR0. The instruction invalidates all TLB entries (including global entries) and all entries in all paging-structure caches (for all PCIDs) if it changes the value of CR0.PG from 1 to 0.
- MOV to CR3. The behavior of the instruction depends on the value of CR4.PCIDE:

1. If the paging structures map the linear address using a page larger than 4 KBytes and there are multiple TLB entries for that page (see Section 4.10.2.3), the instruction invalidates all of them.
2. If the paging structures map the linear address using a page larger than 4 KBytes and there are multiple TLB entries for that page (see Section 4.10.2.3), the instruction invalidates all of them.

  - If CR4.PCIDE = 0, the instruction invalidates all TLB entries associated with PCID 000H except those for global pages. It also invalidates all entries in all paging-structure caches associated with PCID 000H.
  - If CR4.PCIDE = 1 and bit 63 of the instruction's source operand is 0, the instruction invalidates all TLB entries associated with the PCID specified in bits 11:0 of the instruction's source operand except those for global pages. It also invalidates all entries in all paging-structure caches associated with that PCID. It is not required to invalidate entries in the TLBs and paging-structure caches that are associated with other PCIDs.
  - If CR4.PCIDE = 1 and bit 63 of the instruction's source operand is 1, the instruction is not required to invalidate any TLB entries or entries in paging-structure caches.
- MOV to CR4. The behavior of the instruction depends on the bits being modified:
  - The instruction invalidates all TLB entries (including global entries) and all entries in all paging-structure caches (for all PCIDs) if (1) it changes the value of CR4.PGE;[1] or (2) it changes the value of the CR4.PCIDE from 1 to 0.
  - The instruction invalidates all TLB entries and all entries in all paging-structure caches for the current PCID if (1) it changes the value of CR4.PAE; or (2) it changes the value of CR4.SMEP from 0 to 1.
- Task switch. If a task switch changes the value of CR3, it invalidates all TLB entries associated with PCID 000H except those for global pages. It also invalidates all entries in all paging-structure caches associated with PCID 000H.[2]
- VMX transitions. See Section 4.11.1.

The processor is always free to invalidate additional entries in the TLBs and paging-structure caches. The following are some examples:

- INVLPG may invalidate TLB entries for pages other than the one corresponding to its linear-address operand. It may invalidate TLB entries and paging-structure-cache entries associated with PCIDs other than the current PCID.
- INVPCID may invalidate TLB entries for pages other than the one corresponding to the specified linear address. It may invalidate TLB entries and paging-structure-cache entries associated with PCIDs other than the specified PCID.
- MOV to CR0 may invalidate TLB entries even if CR0.PG is not changing. For example, this may occur if either CR0.CD or CR0.NW is modified.
- MOV to CR3 may invalidate TLB entries for global pages. If CR4.PCIDE = 1 and bit 63 of the instruction's source operand is 0, it may invalidate TLB entries and entries in the paging-structure caches associated with PCIDs other than the PCID it is establishing. It may invalidate entries if CR4.PCIDE = 1 and bit 63 of the instruction's source operand is 1.
- MOV to CR4 may invalidate TLB entries when changing CR4.PSE or when changing CR4.SMEP from 1 to 0.
- On a processor supporting Hyper-Threading Technology, invalidations performed on one logical processor may invalidate entries in the TLBs and paging-structure caches used by other logical processors.

(Other instructions and operations may invalidate entries in the TLBs and the paging-structure caches, but the instructions identified above are recommended.)

In addition to the instructions identified above, page faults invalidate entries in the TLBs and paging-structure caches. In particular, a page-fault exception resulting from an attempt to use a linear address will invalidate any TLB entries that are for a page number corresponding to that linear address and that are associated with the current PCID. It also invalidates all entries in the paging-structure caches that would be used for that linear address and that are associated with the current PCID.[3] These invalidations ensure that the page-fault exception will not recur (if the faulting instruction is re-executed) if it would not be caused by the contents of the paging structures

1. If CR4.PGE is changing from 0 to 1, there were no global TLB entries before the execution; if CR4.PGE is changing from 1 to 0, there will be no global TLB entries after the execution.
2. Task switches do not occur in IA-32e mode and thus cannot occur with 4-level paging. Since CR4.PCIDE can be set only with 4-level paging, task switches occur only with CR4.PCIDE = 0.
3. Unlike INVLPG, page faults need not invalidate **all** entries in the paging-structure caches, only those that would be used to translate the faulting linear address.

in memory (and if, therefore, it resulted from cached entries that were not invalidated after the paging structures were modified in memory).

As noted in Section 4.10.2, some processors may choose to cache multiple smaller-page TLB entries for a translation specified by the paging structures to use a page larger than 4 KBytes. There is no way for software to be aware that multiple translations for smaller pages have been used for a large page. The INVLPG instruction and page faults provide the same assurances that they provide when a single TLB entry is used: they invalidate all TLB entries corresponding to the translation specified by the paging structures.

4.10.4.2 Recommended Invalidation

The following items provide some recommendations regarding when software should perform invalidations:

- If software modifies a paging-structure entry that maps a page (rather than referencing another paging structure), it should execute INVLPG for any linear address with a page number whose translation uses that paging-structure entry.[1]

  (If the paging-structure entry may be used in the translation of different page numbers — see Section 4.10.3.3 — software should execute INVLPG for linear addresses with each of those page numbers; alternatively, it could use MOV to CR3 or MOV to CR4.)
- If software modifies a paging-structure entry that references another paging structure, it may use one of the following approaches depending upon the types and number of translations controlled by the modified entry:
  - Execute INVLPG for linear addresses with each of the page numbers with translations that would use the entry. However, if no page numbers that would use the entry have translations (e.g., because the P flags are 0 in all entries in the paging structure referenced by the modified entry), it remains necessary to execute INVLPG at least once.
  - Execute MOV to CR3 if the modified entry controls no global pages.
  - Execute MOV to CR4 to modify CR4.PGE.
- If CR4.PCIDE = 1 and software modifies a paging-structure entry that does not map a page or in which the G flag (bit 8) is 0, additional steps are required if the entry may be used for PCIDs other than the current one. Any one of the following suffices:
  - Execute MOV to CR4 to modify CR4.PGE, either immediately or before again using any of the affected PCIDs. For example, software could use different (previously unused) PCIDs for the processes that used the affected PCIDs.
  - For each affected PCID, execute MOV to CR3 to make that PCID current (and to load the address of the appropriate PML4 table). If the modified entry controls no global pages and bit 63 of the source operand to MOV to CR3 was 0, no further steps are required. Otherwise, execute INVLPG for linear addresses with each of the page numbers with translations that would use the entry; if no page numbers that would use the entry have translations, execute INVLPG at least once.
- If software using PAE paging modifies a PDPTE, it should reload CR3 with the register's current value to ensure that the modified PDPTE is loaded into the corresponding PDPTE register (see Section 4.4.1).
- If the nature of the paging structures is such that a single entry may be used for multiple purposes (see Section 4.10.3.3), software should perform invalidations for all of these purposes. For example, if a single entry might serve as both a PDE and PTE, it may be necessary to execute INVLPG with two (or more) linear addresses, one that uses the entry as a PDE and one that uses it as a PTE. (Alternatively, software could use MOV to CR3 or MOV to CR4.)
- As noted in Section 4.10.2, the TLBs may subsequently contain multiple translations for the address range if software modifies the paging structures so that the page size used for a 4-KByte range of linear addresses changes. A reference to a linear address in the address range may use any of these translations.

  Software wishing to prevent this uncertainty should not write to a paging-structure entry in a way that would change, for any linear address, both the page size and either the page frame, access rights, or other attributes. It can instead use the following algorithm: first clear the P flag in the relevant paging-structure entry (e.g.,

1. One execution of INVLPG is sufficient even for a page with size greater than 4 KBytes.

PDE); then invalidate any translations for the affected linear addresses (see above); and then modify the relevant paging-structure entry to set the P flag and establish modified translation(s) for the new page size.

- Software should clear bit 63 of the source operand to a MOV to CR3 instruction that establishes a PCID that had been used earlier for a different linear-address space (e.g., with a different value in bits 51:12 of CR3). This ensures invalidation of any information that may have been cached for the previous linear-address space.

  This assumes that both linear-address spaces use the same global pages and that it is thus not necessary to invalidate any global TLB entries. If that is not the case, software should invalidate those entries by executing MOV to CR4 to modify CR4.PGE.

4.10.4.3 Optional Invalidation

The following items describe cases in which software may choose not to invalidate and the potential consequences of that choice:

- If a paging-structure entry is modified to change the P flag from 0 to 1, no invalidation is necessary. This is because no TLB entry or paging-structure cache entry is created with information from a paging-structure entry in which the P flag is 0.[1]
- If a paging-structure entry is modified to change the accessed flag from 0 to 1, no invalidation is necessary (assuming that an invalidation was performed the last time the accessed flag was changed from 1 to 0). This is because no TLB entry or paging-structure cache entry is created with information from a paging-structure entry in which the accessed flag is 0.
- If a paging-structure entry is modified to change the R/W flag from 0 to 1, failure to perform an invalidation may result in a "spurious" page-fault exception (e.g., in response to an attempted write access) but no other adverse behavior. Such an exception will occur at most once for each affected linear address (see Section 4.10.4.1).
- If CR4.SMEP = 0 and a paging-structure entry is modified to change the U/S flag from 0 to 1, failure to perform an invalidation may result in a "spurious" page-fault exception (e.g., in response to an attempted user-mode access) but no other adverse behavior. Such an exception will occur at most once for each affected linear address (see Section 4.10.4.1).
- If a paging-structure entry is modified to change the XD flag from 1 to 0, failure to perform an invalidation may result in a "spurious" page-fault exception (e.g., in response to an attempted instruction fetch) but no other adverse behavior. Such an exception will occur at most once for each affected linear address (see Section 4.10.4.1).
- If a paging-structure entry is modified to change the accessed flag from 1 to 0, failure to perform an invalidation may result in the processor not setting that bit in response to a subsequent access to a linear address whose translation uses the entry. Software cannot interpret the bit being clear as an indication that such an access has not occurred.
- If software modifies a paging-structure entry that identifies the final physical address for a linear address (either a PTE or a paging-structure entry in which the PS flag is 1) to change the dirty flag from 1 to 0, failure to perform an invalidation may result in the processor not setting that bit in response to a subsequent write to a linear address whose translation uses the entry. Software cannot interpret the bit being clear as an indication that such a write has not occurred.
- The read of a paging-structure entry in translating an address being used to fetch an instruction may appear to execute before an earlier write to that paging-structure entry if there is no serializing instruction between the write and the instruction fetch. Note that the invalidating instructions identified in Section 4.10.4.1 are all serializing instructions.
- Section 4.10.3.3 describes situations in which a single paging-structure entry may contain information cached in multiple entries in the paging-structure caches. Because all entries in these caches are invalidated by any execution of INVLPG, it is not necessary to follow the modification of such a paging-structure entry by executing INVLPG multiple times solely for the purpose of invalidating these multiple cached entries. (It may be necessary to do so to invalidate multiple TLB entries.)

1. If it is also the case that no invalidation was performed the last time the P flag was changed from 1 to 0, the processor may use a TLB entry or paging-structure cache entry that was created when the P flag had earlier been 1.

4.10.4.4 Delayed Invalidation

Required invalidations may be delayed under some circumstances. Software developers should understand that, between the modification of a paging-structure entry and execution of the invalidation instruction recommended in Section 4.10.4.2, the processor may use translations based on either the old value or the new value of the paging-structure entry. The following items describe some of the potential consequences of delayed invalidation:

- If a paging-structure entry is modified to change the P flag from 1 to 0, an access to a linear address whose translation is controlled by this entry may or may not cause a page-fault exception.
- If a paging-structure entry is modified to change the R/W flag from 0 to 1, write accesses to linear addresses whose translation is controlled by this entry may or may not cause a page-fault exception.
- If a paging-structure entry is modified to change the U/S flag from 0 to 1, user-mode accesses to linear addresses whose translation is controlled by this entry may or may not cause a page-fault exception.
- If a paging-structure entry is modified to change the XD flag from 1 to 0, instruction fetches from linear addresses whose translation is controlled by this entry may or may not cause a page-fault exception.

As noted in Section 9.1.1, an x87 instruction or an SSE instruction that accesses data larger than a quadword may be implemented using multiple memory accesses. If such an instruction stores to memory and invalidation has been delayed, some of the accesses may complete (writing to memory) while another causes a page-fault exception.[1] In this case, the effects of the completed accesses may be visible to software even though the overall instruction caused a fault.

In some cases, the consequences of delayed invalidation may not affect software adversely. For example, when freeing a portion of the linear-address space (by marking paging-structure entries "not present"), invalidation using INVLPG may be delayed if software does not re-allocate that portion of the linear-address space or the memory that had been associated with it. However, because of speculative execution (or errant software), there may be accesses to the freed portion of the linear-address space before the invalidations occur. In this case, the following can happen:

- Reads can occur to the freed portion of the linear-address space. Therefore, invalidation should not be delayed for an address range that has read side effects.
- The processor may retain entries in the TLBs and paging-structure caches for an extended period of time. Software should not assume that the processor will not use entries associated with a linear address simply because time has passed.
- As noted in Section 4.10.3.1, the processor may create an entry in a paging-structure cache even if there are no translations for any linear address that might use that entry. Thus, if software has marked "not present" all entries in a page table, the processor may subsequently create a PDE-cache entry for the PDE that references that page table (assuming that the PDE itself is marked "present").
- If software attempts to write to the freed portion of the linear-address space, the processor might not generate a page fault. (Such an attempt would likely be the result of a software error.) For that reason, the page frames previously associated with the freed portion of the linear-address space should not be reallocated for another purpose until the appropriate invalidations have been performed.

4.10.5 Propagation of Paging-Structure Changes to Multiple Processors

As noted in Section 4.10.4, software that modifies a paging-structure entry may need to invalidate entries in the TLBs and paging-structure caches that were derived from the modified entry before it was modified. In a system containing more than one logical processor, software must account for the fact that there may be entries in the TLBs and paging-structure caches of logical processors other than the one used to modify the paging-structure entry. The process of propagating the changes to a paging-structure entry is commonly referred to as "TLB shootdown."

TLB shootdown can be done using memory-based semaphores and/or interprocessor interrupts (IPI). The following items describe a simple but inefficient example of a TLB shootdown algorithm for processors supporting the Intel-64 and IA-32 architectures:

1. If the accesses are to different pages, this may occur even if invalidation has not been delayed.

1. Begin barrier: Stop all but one logical processor; that is, cause all but one to execute the HLT instruction or to enter a spin loop.
2. Allow the active logical processor to change the necessary paging-structure entries.
3. Allow all logical processors to perform invalidations appropriate to the modifications to the paging-structure entries.
4. Allow all logical processors to resume normal operation.

Alternative, performance-optimized, TLB shootdown algorithms may be developed; however, software developers must take care to ensure that the following conditions are met:

- All logical processors that are using the paging structures that are being modified must participate and perform appropriate invalidations after the modifications are made.
- If the modifications to the paging-structure entries are made before the barrier or if there is no barrier, the operating system must ensure one of the following: (1) that the affected linear-address range is not used between the time of modification and the time of invalidation; or (2) that it is prepared to deal with the consequences of the affected linear-address range being used during that period. For example, if the operating system does not allow pages being freed to be reallocated for another purpose until after the required invalidations, writes to those pages by errant software will not unexpectedly modify memory that is in use.
- Software must be prepared to deal with reads, instruction fetches, and prefetch requests to the affected linear-address range that are a result of speculative execution that would never actually occur in the executed code path.

When multiple logical processors are using the same linear-address space at the same time, they must coordinate before any request to modify the paging-structure entries that control that linear-address space. In these cases, the barrier in the TLB shootdown routine may not be required. For example, when freeing a range of linear addresses, some other mechanism can assure no logical processor is using that range before the request to free it is made. In this case, a logical processor freeing the range can clear the P flags in the PTEs associated with the range, free the physical page frames associated with the range, and then signal the other logical processors using that linear-address space to perform the necessary invalidations. All the affected logical processors must complete their invalidations before the linear-address range and the physical page frames previously associated with that range can be reallocated.

4.11 INTERACTIONS WITH VIRTUAL-MACHINE EXTENSIONS (VMX)

The architecture for virtual-machine extensions (VMX) includes features that interact with paging. Section 4.11.1 discusses ways in which VMX-specific control transfers, called VMX transitions specially affect paging. Section 4.11.2 gives an overview of VMX features specifically designed to support address translation.

4.11.1 VMX Transitions

The VMX architecture defines two control transfers called **VM entries** and **VM exits**; collectively, these are called **VMX transitions**. VM entries and VM exits are described in detail in Chapter 27 and Chapter 28, respectively, in the *Intel® 64 and IA-32 Architectures Software Developer's Manual, Volume 3C*. The following items identify paging-related details:

- VMX transitions modify the CR0 and CR4 registers and the IA32_EFER MSR concurrently. For this reason, they allow transitions between paging modes that would not otherwise be possible:
  - VM entries allow transitions from 4-level paging directly to either 32-bit paging or PAE paging.
  - VM exits allow transitions from either 32-bit paging or PAE paging directly to 4-level paging or 5-level paging.
- VMX transitions that result in PAE paging load the PDPTE registers (see Section 4.4.1) as follows:
  - VM entries load the PDPTE registers either from the physical address being loaded into CR3 or from the virtual-machine control structure (VMCS); see Section 27.3.2.4.
  - VM exits load the PDPTE registers from the physical address being loaded into CR3; see Section 28.5.4.

- VMX transitions invalidate the TLBs and paging-structure caches based on certain control settings. See Section 27.3.2.5 and Section 28.5.5 in the *Intel® 64 and IA-32 Architectures Software Developer's Manual, Volume 3C*.

4.11.2 VMX Support for Address Translation

Chapter 29, "VMX Support for Address Translation," in the *Intel® 64 and IA-32 Architectures Software Developer's Manual, Volume 3C* describe two features of the virtual-machine extensions (VMX) that interact directly with paging. These are **virtual-processor identifiers** (**VPIDs**) and the **extended page table** mechanism (**EPT**).

VPIDs provide a way for software to identify to the processor the address spaces for different "virtual processors." The processor may use this identification to maintain concurrently information for multiple address spaces in its TLBs and paging-structure caches, even when non-zero PCIDs are not being used. See Section 29.1 for details.

When EPT is in use, the addresses in the paging-structures are not used as physical addresses to access memory and memory-mapped I/O. Instead, they are treated as **guest-physical** addresses and are translated through a set of EPT paging structures to produce physical addresses. EPT can also specify its own access rights and memory typing; these are used on conjunction with those specified in this chapter. See Section 29.3 for more information.

Both VPIDs and EPT may change the way that a processor maintains information in TLBs and paging structure caches and the ways in which software can manage that information. Some of the behaviors documented in Section 4.10 may change. See Section 29.4 for details.

4.12 USING PAGING FOR VIRTUAL MEMORY

With paging, portions of the linear-address space need not be mapped to the physical-address space; data for the unmapped addresses can be stored externally (e.g., on disk). This method of mapping the linear-address space is referred to as virtual memory or demand-paged virtual memory.

Paging divides the linear address space into fixed-size pages that can be mapped into the physical-address space and/or external storage. When a program (or task) references a linear address, the processor uses paging to translate the linear address into a corresponding physical address if such an address is defined.

If the page containing the linear address is not currently mapped into the physical-address space, the processor generates a page-fault exception as described in Section 4.7. The handler for page-fault exceptions typically directs the operating system or executive to load data for the unmapped page from external storage into physical memory (perhaps writing a different page from physical memory out to external storage in the process) and to map it using paging (by updating the paging structures). When the page has been loaded into physical memory, a return from the exception handler causes the instruction that generated the exception to be restarted.

Paging differs from segmentation through its use of fixed-size pages. Unlike segments, which usually are the same size as the code or data structures they hold, pages have a fixed size. If segmentation is the only form of address translation used, a data structure present in physical memory will have all of its parts in memory. If paging is used, a data structure can be partly in memory and partly in disk storage.

4.13 MAPPING SEGMENTS TO PAGES

The segmentation and paging mechanisms provide support for a wide variety of approaches to memory management. When segmentation and paging are combined, segments can be mapped to pages in several ways. To implement a flat (unsegmented) addressing environment, for example, all the code, data, and stack modules can be mapped to one or more large segments (up to 4-GBytes) that share same range of linear addresses (see Figure 3-2 in Section 3.2.2). Here, segments are essentially invisible to applications and the operating-system or executive. If paging is used, the paging mechanism can map a single linear-address space (contained in a single segment) into virtual memory. Alternatively, each program (or task) can have its own large linear-address space (contained in its own segment), which is mapped into virtual memory through its own paging structures.

Segments can be smaller than the size of a page. If one of these segments is placed in a page which is not shared with another segment, the extra memory is wasted. For example, a small data structure, such as a 1-Byte sema-

phore, occupies 4 KBytes if it is placed in a page by itself. If many semaphores are used, it is more efficient to pack them into a single page.

The Intel-64 and IA-32 architectures do not enforce correspondence between the boundaries of pages and segments. A page can contain the end of one segment and the beginning of another. Similarly, a segment can contain the end of one page and the beginning of another.

Memory-management software may be simpler and more efficient if it enforces some alignment between page and segment boundaries. For example, if a segment which can fit in one page is placed in two pages, there may be twice as much paging overhead to support access to that segment.

One approach to combining paging and segmentation that simplifies memory-management software is to give each segment its own page table, as shown in Figure 4-13. This convention gives the segment a single entry in the page directory, and this entry provides the access control information for paging the entire segment.

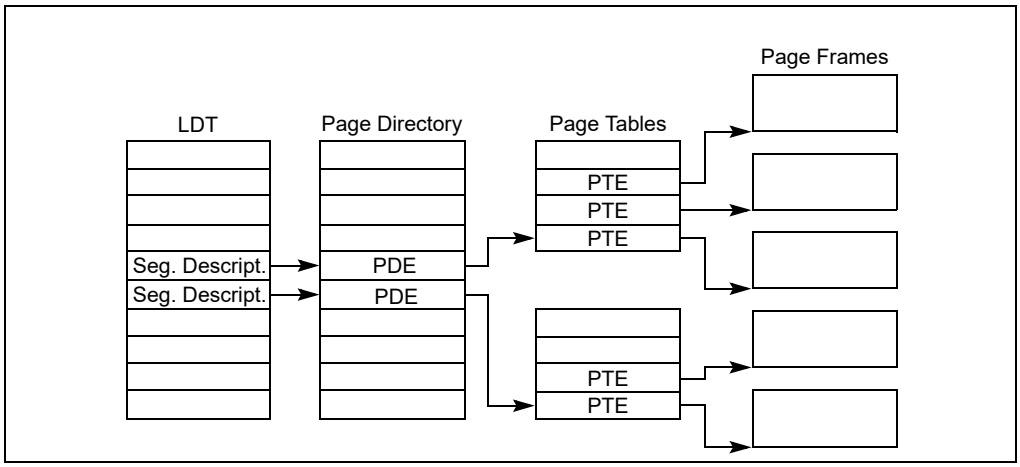

Figure 4-13. Memory Management Convention That Assigns a Page Table to Each Segment

CHAPTER 5
PROTECTION

In protected mode, the Intel 64 and IA-32 architectures provide a protection mechanism that operates at both the segment level and the page level. This protection mechanism provides the ability to limit access to certain segments or pages based on privilege levels (four privilege levels for segments and two privilege levels for pages). For example, critical operating-system code and data can be protected by placing them in more privileged segments than those that contain applications code. The processor's protection mechanism will then prevent application code from accessing the operating-system code and data in any but a controlled, defined manner.

Segment and page protection can be used at all stages of software development to assist in localizing and detecting design problems and bugs. It can also be incorporated into end-products to offer added robustness to operating systems, utilities software, and applications software.

When the protection mechanism is used, each memory reference is checked to verify that it satisfies various protection checks. All checks are made before the memory cycle is started; any violation results in an exception. Because checks are performed in parallel with address translation, there is no performance penalty. The protection checks that are performed fall into the following categories:

- Limit checks.
- Type checks.
- Privilege level checks.
- Restriction of addressable domain.
- Restriction of procedure entry-points.
- Restriction of instruction set.

All protection violation results in an exception being generated. See Chapter 6, "Interrupt and Exception Handling," for an explanation of the exception mechanism. This chapter describes the protection mechanism and the violations which lead to exceptions.

The following sections describe the protection mechanism available in protected mode. See Chapter 21, "8086 Emulation," for information on protection in real-address and virtual-8086 mode.

5.1 ENABLING AND DISABLING SEGMENT AND PAGE PROTECTION

Setting the PE flag in register CR0 causes the processor to switch to protected mode, which in turn enables the segment-protection mechanism. Once in protected mode, there is no control bit for turning the protection mechanism on or off. The part of the segment-protection mechanism that is based on privilege levels can essentially be disabled while still in protected mode by assigning a privilege level of 0 (most privileged) to all segment selectors and segment descriptors. This action disables the privilege level protection barriers between segments, but other protection checks such as limit checking and type checking are still carried out.

Page-level protection is automatically enabled when paging is enabled (by setting the PG flag in register CR0). Here again there is no mode bit for turning off page-level protection once paging is enabled. However, page-level protection can be disabled by performing the following operations:

- Clear the WP flag in control register CR0.
- Set the read/write (R/W) and user/supervisor (U/S) flags for each page-directory and page-table entry.

This action makes each page a writable, user page, which in effect disables page-level protection.

5.2 FIELDS AND FLAGS USED FOR SEGMENT-LEVEL AND PAGE-LEVEL PROTECTION

The processor's protection mechanism uses the following fields and flags in the system data structures to control access to segments and pages:

- **Descriptor type (S) flag —** (Bit 12 in the second doubleword of a segment descriptor.) Determines if the segment descriptor is for a system segment or a code or data segment.
- **Type field** — (Bits 8 through 11 in the second doubleword of a segment descriptor.) Determines the type of code, data, or system segment.
- **Limit field** — (Bits 0 through 15 of the first doubleword and bits 16 through 19 of the second doubleword of a segment descriptor.) Determines the size of the segment, along with the G flag and E flag (for data segments).
- **G flag —** (Bit 23 in the second doubleword of a segment descriptor.) Determines the size of the segment, along with the limit field and E flag (for data segments).
- **E flag —** (Bit 10 in the second doubleword of a data-segment descriptor.) Determines the size of the segment, along with the limit field and G flag.
- **Descriptor privilege level (DPL) field** — (Bits 13 and 14 in the second doubleword of a segment descriptor.) Determines the privilege level of the segment.
- **Requested privilege level (RPL) field** — (Bits 0 and 1 of any segment selector.) Specifies the requested privilege level of a segment selector.
- **Current privilege level (CPL) field** — (Bits 0 and 1 of the CS segment register.) Indicates the privilege level of the currently executing program or procedure. The term current privilege level (CPL) refers to the setting of this field.
- **User/supervisor (U/S) flag** — (Bit 2 of paging-structure entries.) Determines the type of page: user or supervisor.
- **Read/write (R/W) flag** — (Bit 1 of paging-structure entries.) Determines the type of access allowed to a page: read-only or read/write.
- **Execute-disable (XD) flag** — (Bit 63 of certain paging-structure entries.) Determines the type of access allowed to a page: executable or not-executable.

Figure 5-1 shows the location of the various fields and flags in the data-, code-, and system-segment descriptors; Figure 3-6 shows the location of the RPL (or CPL) field in a segment selector (or the CS register); and Chapter 4 identifies the locations of the U/S, R/W, and XD flags in the paging-structure entries.

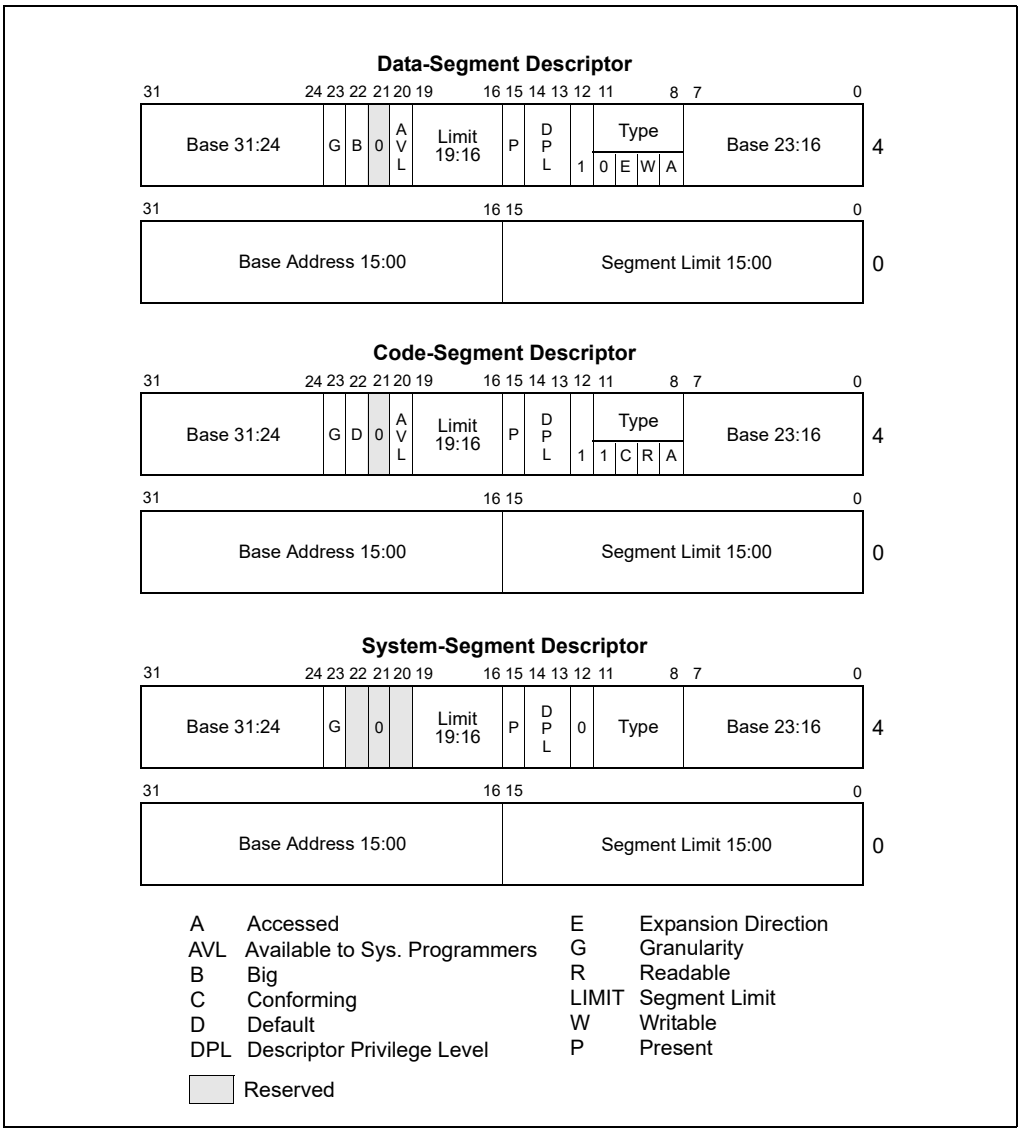

Figure 5-1. Descriptor Fields Used for Protection

Many different styles of protection schemes can be implemented with these fields and flags. When the operating system creates a descriptor, it places values in these fields and flags in keeping with the particular protection style chosen for an operating system or executive. Application programs do not generally access or modify these fields and flags.

The following sections describe how the processor uses these fields and flags to perform the various categories of checks described in the introduction to this chapter.

5.2.1 Code-Segment Descriptor in 64-bit Mode

Code segments continue to exist in 64-bit mode even though, for address calculations, the segment base is treated as zero. Some code-segment (CS) descriptor content (the base address and limit fields) is ignored; the remaining fields function normally (except for the readable bit in the type field).

Code segment descriptors and selectors are needed in IA-32e mode to establish the processor's operating mode and execution privilege-level. The usage is as follows:

- IA-32e mode uses a previously unused bit in the CS descriptor. Bit 53 is defined as the 64-bit (L) flag and is used to select between 64-bit mode and compatibility mode when IA-32e mode is active (IA32_EFER.LMA = 1). See Figure 5-2.
  - — If CS.L = 0 and IA-32e mode is active, the processor is running in compatibility mode. In this case, CS.D selects the default size for data and addresses. If CS.D = 0, the default data and address size is 16 bits. If CS.D = 1, the default data and address size is 32 bits.
  - — If CS.L = 1 and IA-32e mode is active, the only valid setting is CS.D = 0. This setting indicates a default operand size of 32 bits and a default address size of 64 bits. The CS.L = 1 and CS.D = 1 bit combination is reserved for future use and a #GP fault will be generated on an attempt to use a code segment with these bits set in IA-32e mode.
- In IA-32e mode, the CS descriptor's DPL is used for execution privilege checks (as in legacy 32-bit mode).

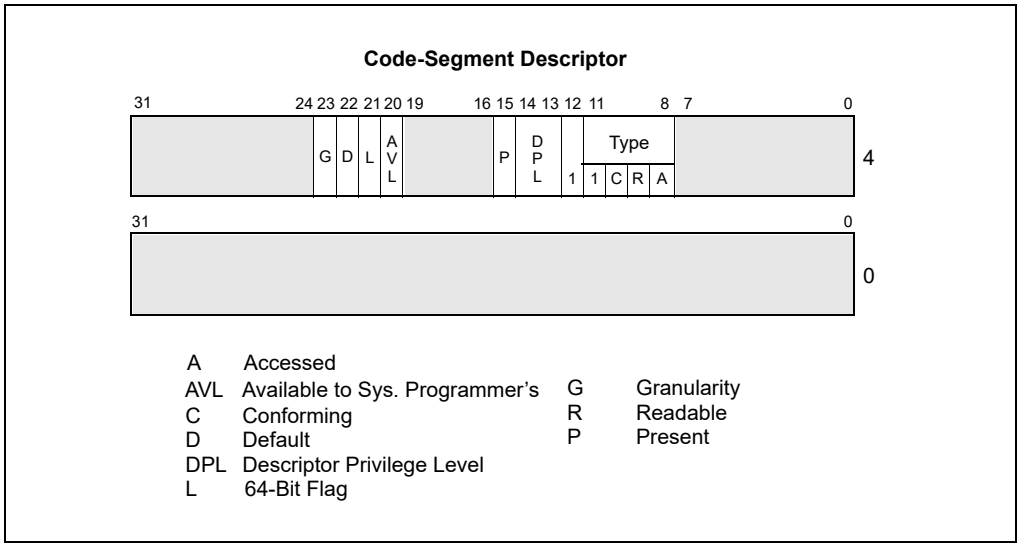

Figure 5-2. Descriptor Fields with Flags used in IA-32e Mode

5.3 LIMIT CHECKING

The limit field of a segment descriptor prevents programs or procedures from addressing memory locations outside the segment. The effective value of the limit depends on the setting of the G (granularity) flag (see Figure 5-1). For data segments, the limit also depends on the E (expansion direction) flag and the B (default stack pointer size and/or upper bound) flag. The E flag is one of the bits in the type field when the segment descriptor is for a data-segment type.

When the G flag is clear (byte granularity), the effective limit is the value of the 20-bit limit field in the segment descriptor. Here, the limit ranges from 0 to FFFFFH (1 MByte). When the G flag is set (4-KByte page granularity), the processor scales the value in the limit field by a factor of 2^{12} (4 KBytes). In this case, the effective limit ranges from FFFH (4 KBytes) to FFFFFFFFH (4 GBytes). Note that when scaling is used (G flag is set), the lower 12 bits of a segment offset (address) are not checked against the limit; for example, note that if the segment limit is 0, offsets 0 through FFFH are still valid.

For all types of segments except expand-down data segments, the effective limit is the last address that is allowed to be accessed in the segment, which is one less than the size, in bytes, of the segment. The processor causes a general-protection exception (or, if the segment is SS, a stack-fault exception) any time an attempt is made to access the following addresses in a segment:

- A byte at an offset greater than the effective limit
- A word at an offset greater than the (effective-limit – 1)
- A doubleword at an offset greater than the (effective-limit – 3)
- A quadword at an offset greater than the (effective-limit – 7)

- A double quadword at an offset greater than the (effective limit – 15)

When the effective limit is FFFFFFFFH (4 GBytes), these accesses may or may not cause the indicated exceptions. Behavior is implementation-specific and may vary from one execution to another.

For expand-down data segments, the segment limit has the same function but is interpreted differently. Here, the effective limit specifies the last address that is not allowed to be accessed within the segment; the range of valid offsets is from (effective-limit + 1) to FFFFFFFFH if the B flag is set and from (effective-limit + 1) to FFFFH if the B flag is clear. An expand-down segment has maximum size when the segment limit is 0.

Limit checking catches programming errors such as runaway code, runaway subscripts, and invalid pointer calculations. These errors are detected when they occur, so identification of the cause is easier. Without limit checking, these errors could overwrite code or data in another segment.

In addition to checking segment limits, the processor also checks descriptor table limits. The GDTR and IDTR registers contain 16-bit limit values that the processor uses to prevent programs from selecting a segment descriptors outside the respective descriptor tables. The LDTR and task registers contain 32-bit segment limit value (read from the segment descriptors for the current LDT and TSS, respectively). The processor uses these segment limits to prevent accesses beyond the bounds of the current LDT and TSS. See Section 3.5.1, "Segment Descriptor Tables," for more information on the GDT and LDT limit fields; see Section 6.10, "Interrupt Descriptor Table (IDT)," for more information on the IDT limit field; and see Section 8.2.4, "Task Register," for more information on the TSS segment limit field.

5.3.1 Limit Checking in 64-bit Mode

In 64-bit mode, the processor does not perform runtime limit checking on code or data segments. However, the processor does check descriptor-table limits.

5.4 TYPE CHECKING

Segment descriptors contain type information in two places:

- The S (descriptor type) flag.
- The type field.

The processor uses this information to detect programming errors that result in an attempt to use a segment or gate in an incorrect or unintended manner.

The S flag indicates whether a descriptor is a system type or a code or data type. The type field provides 4 additional bits for use in defining various types of code, data, and system descriptors. Table 3-1 shows the encoding of the type field for code and data descriptors; Table 3-2 shows the encoding of the field for system descriptors.

The processor examines type information at various times while operating on segment selectors and segment descriptors. The following list gives examples of typical operations where type checking is performed (this list is not exhaustive):

- **When a segment selector is loaded into a segment register** — Certain segment registers can contain only certain descriptor types, for example:
  - The CS register only can be loaded with a selector for a code segment.
  - Segment selectors for code segments that are not readable or for system segments cannot be loaded into data-segment registers (DS, ES, FS, and GS).
  - Only segment selectors of writable data segments can be loaded into the SS register.
- When a segment selector is loaded into the LDTR or task register — For example:
  - The LDTR can only be loaded with a selector for an LDT.
  - The task register can only be loaded with a segment selector for a TSS.
- **When instructions access segments whose descriptors are already loaded into segment registers** — Certain segments can be used by instructions only in certain predefined ways, for example:
  - No instruction may write into an executable segment.

  - No instruction may write into a data segment if it is not writable.
  - No instruction may read an executable segment unless the readable flag is set.
- **When an instruction operand contains a segment selector** — Certain instructions can access segments or gates of only a particular type, for example:
  - A far CALL or far JMP instruction can only access a segment descriptor for a conforming code segment, nonconforming code segment, call gate, task gate, or TSS.
  - The LLDT instruction must reference a segment descriptor for an LDT.
  - The LTR instruction must reference a segment descriptor for a TSS.
  - The LAR instruction must reference a segment or gate descriptor for an LDT, TSS, call gate, task gate, code segment, or data segment.
  - The LSL instruction must reference a segment descriptor for a LDT, TSS, code segment, or data segment.
  - IDT entries must be interrupt, trap, or task gates.
- **During certain internal operations** — For example:
  - On a far call or far jump (executed with a far CALL or far JMP instruction), the processor determines the type of control transfer to be carried out (call or jump to another code segment, a call or jump through a gate, or a task switch) by checking the type field in the segment (or gate) descriptor pointed to by the segment (or gate) selector given as an operand in the CALL or JMP instruction. If the descriptor type is for a code segment or call gate, a call or jump to another code segment is indicated; if the descriptor type is for a TSS or task gate, a task switch is indicated.
  - On a call or jump through a call gate (or on an interrupt- or exception-handler call through a trap or interrupt gate), the processor automatically checks that the segment descriptor being pointed to by the gate is for a code segment.
  - On a call or jump to a new task through a task gate (or on an interrupt- or exception-handler call to a new task through a task gate), the processor automatically checks that the segment descriptor being pointed to by the task gate is for a TSS.
  - On a call or jump to a new task by a direct reference to a TSS, the processor automatically checks that the segment descriptor being pointed to by the CALL or JMP instruction is for a TSS.
  - On return from a nested task (initiated by an IRET instruction), the processor checks that the previous task link field in the current TSS points to a TSS.

5.4.1 Null Segment Selector Checking

Attempting to load a null segment selector (see Section 3.4.2, "Segment Selectors") into the CS or SS segment register generates a general-protection exception (#GP). A null segment selector can be loaded into the DS, ES, FS, or GS register, but any attempt to access a segment through one of these registers when it is loaded with a null segment selector results in a #GP exception being generated. Loading unused data-segment registers with a null segment selector is a useful method of detecting accesses to unused segment registers and/or preventing unwanted accesses to data segments.

5.4.1.1 NULL Segment Checking in 64-bit Mode

In 64-bit mode, the processor does not perform runtime checking on NULL segment selectors. The processor does not cause a #GP fault when an attempt is made to access memory where the referenced segment register has a NULL segment selector.

5.5 PRIVILEGE LEVELS

The processor's segment-protection mechanism recognizes 4 privilege levels, numbered from 0 to 3. The greater numbers mean lesser privileges. Figure 5-3 shows how these levels of privilege can be interpreted as rings of protection.

The center (reserved for the most privileged code, data, and stacks) is used for the segments containing the critical software, usually the kernel of an operating system. Outer rings are used for less critical software. (Systems that use only 2 of the 4 possible privilege levels should use levels 0 and 3.)

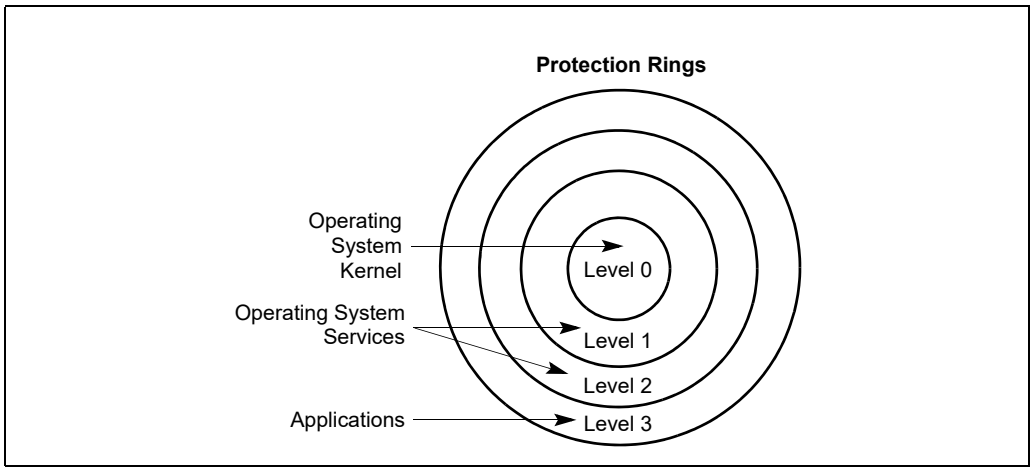

Figure 5-3. Protection Rings

The processor uses privilege levels to prevent a program or task operating at a lesser privilege level from accessing a segment with a greater privilege, except under controlled situations. When the processor detects a privilege level violation, it generates a general-protection exception (#GP).

To carry out privilege-level checks between code segments and data segments, the processor recognizes the following three types of privilege levels:

- **Current privilege level (CPL)** — The CPL is the privilege level of the currently executing program or task. It is stored in bits 0 and 1 of the CS and SS segment registers. Normally, the CPL is equal to the privilege level of the code segment from which instructions are being fetched. The processor changes the CPL when program control is transferred to a code segment with a different privilege level. The CPL is treated slightly differently when accessing conforming code segments. Conforming code segments can be accessed from any privilege level that is equal to or numerically greater (less privileged) than the DPL of the conforming code segment. Also, the CPL is not changed when the processor accesses a conforming code segment that has a different privilege level than the CPL.
- **Descriptor privilege level (DPL)** — The DPL is the privilege level of a segment or gate. It is stored in the DPL field of the segment or gate descriptor for the segment or gate. When the currently executing code segment attempts to access a segment or gate, the DPL of the segment or gate is compared to the CPL and RPL of the segment or gate selector (as described later in this section). The DPL is interpreted differently, depending on the type of segment or gate being accessed:
  - **Data segment** — The DPL indicates the numerically highest privilege level that a program or task can have to be allowed to access the segment. For example, if the DPL of a data segment is 1, only programs running at a CPL of 0 or 1 can access the segment.
  - **Nonconforming code segment (without using a call gate)** — The DPL indicates the privilege level that a program or task must be at to access the segment. For example, if the DPL of a nonconforming code segment is 0, only programs running at a CPL of 0 can access the segment.
  - **Call gate** — The DPL indicates the numerically highest privilege level that the currently executing program or task can be at and still be able to access the call gate. (This is the same access rule as for a data segment.)
  - **Conforming code segment and nonconforming code segment accessed through a call gate** — The DPL indicates the numerically lowest privilege level that a program or task can have to be allowed to access the segment. For example, if the DPL of a conforming code segment is 2, programs running at a CPL of 0 or 1 cannot access the segment.

  - **TSS** — The DPL indicates the numerically highest privilege level that the currently executing program or task can be at and still be able to access the TSS. (This is the same access rule as for a data segment.)

- **Requested privilege level (RPL)** — The RPL is an override privilege level that is assigned to segment selectors. It is stored in bits 0 and 1 of the segment selector. The processor checks the RPL along with the CPL to determine if access to a segment is allowed. Even if the program or task requesting access to a segment has sufficient privilege to access the segment, access is denied if the RPL is not of sufficient privilege level. That is, if the RPL of a segment selector is numerically greater than the CPL, the RPL overrides the CPL, and vice versa. The RPL can be used to ensure that privileged code does not access a segment on behalf of an application program unless the program itself has access privileges for that segment. See Section 5.10.4, "Checking Caller Access Privileges (ARPL Instruction)," for a detailed description of the purpose and typical use of the RPL.

Privilege levels are checked when the segment selector of a segment descriptor is loaded into a segment register. The checks used for data access differ from those used for transfers of program control among code segments; therefore, the two kinds of accesses are considered separately in the following sections.

5.6 PRIVILEGE LEVEL CHECKING WHEN ACCESSING DATA SEGMENTS

To access operands in a data segment, the segment selector for the data segment must be loaded into the data-segment registers (DS, ES, FS, or GS) or into the stack-segment register (SS). (Segment registers can be loaded with the MOV, POP, LDS, LES, LFS, LGS, and LSS instructions.) Before the processor loads a segment selector into a segment register, it performs a privilege check (see Figure 5-4) by comparing the privilege levels of the currently running program or task (the CPL), the RPL of the segment selector, and the DPL of the segment's segment descriptor. The processor loads the segment selector into the segment register if the DPL is numerically greater than or equal to both the CPL and the RPL. Otherwise, a general-protection fault is generated and the segment register is not loaded.

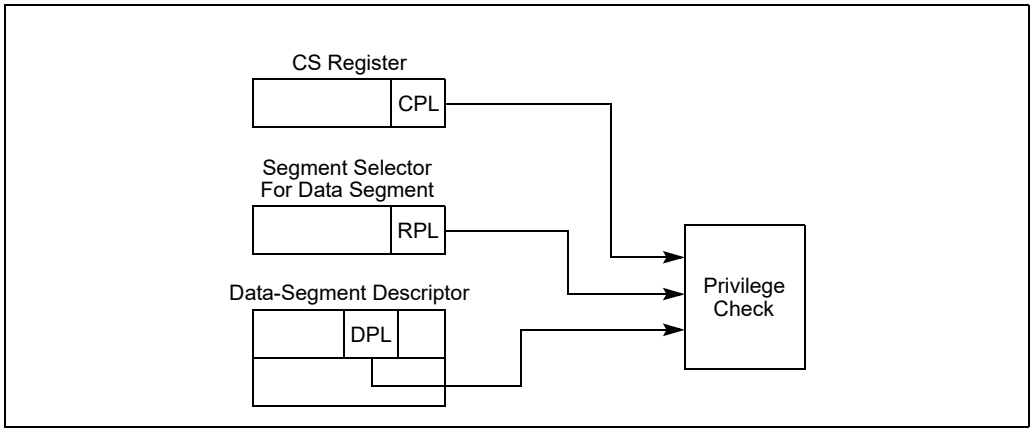

Figure 5-4. Privilege Check for Data Access

Figure 5-5 shows four procedures (located in codes segments A, B, C, and D), each running at different privilege levels and each attempting to access the same data segment.

1. The procedure in code segment A is able to access data segment E using segment selector E1, because the CPL of code segment A and the RPL of segment selector E1 are equal to the DPL of data segment E.
2. The procedure in code segment B is able to access data segment E using segment selector E2, because the CPL of code segment B and the RPL of segment selector E2 are both numerically lower than (more privileged) than the DPL of data segment E. A code segment B procedure can also access data segment E using segment selector E1.
3. The procedure in code segment C is not able to access data segment E using segment selector E3 (dotted line), because the CPL of code segment C and the RPL of segment selector E3 are both numerically greater than (less privileged) than the DPL of data segment E. Even if a code segment C procedure were to use segment selector

E1 or E2, such that the RPL would be acceptable, it still could not access data segment E because its CPL is not privileged enough.

4. The procedure in code segment D should be able to access data segment E because code segment D's CPL is numerically less than the DPL of data segment E. However, the RPL of segment selector E3 (which the code segment D procedure is using to access data segment E) is numerically greater than the DPL of data segment E, so access is not allowed. If the code segment D procedure were to use segment selector E1 or E2 to access the data segment, access would be allowed.

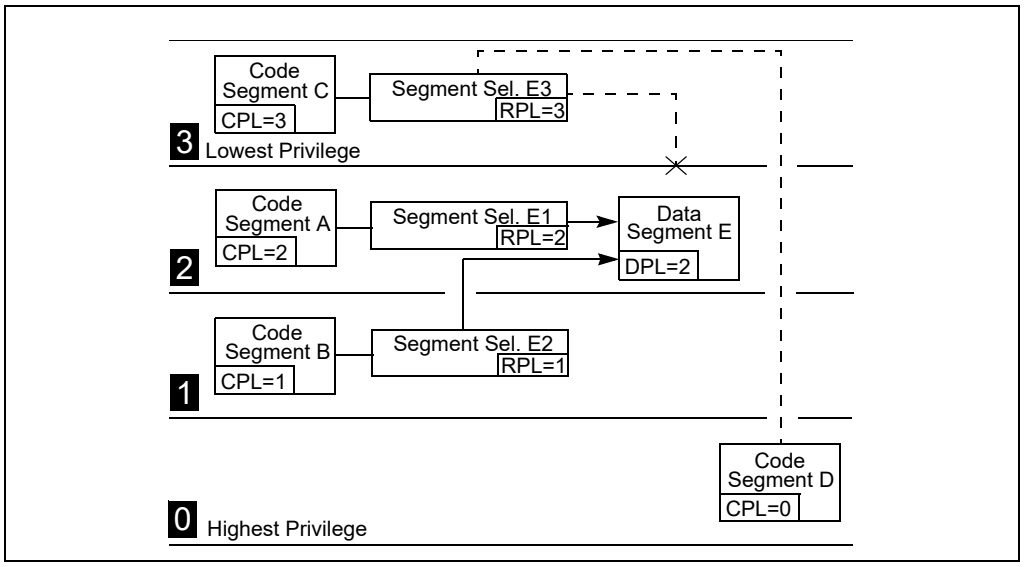

Figure 5-5. Examples of Accessing Data Segments From Various Privilege Levels

As demonstrated in the previous examples, the addressable domain of a program or task varies as its CPL changes. When the CPL is 0, data segments at all privilege levels are accessible; when the CPL is 1, only data segments at privilege levels 1 through 3 are accessible; when the CPL is 3, only data segments at privilege level 3 are accessible.

The RPL of a segment selector can always override the addressable domain of a program or task. When properly used, RPLs can prevent problems caused by accidental (or intensional) use of segment selectors for privileged data segments by less privileged programs or procedures.

It is important to note that the RPL of a segment selector for a data segment is under software control. For example, an application program running at a CPL of 3 can set the RPL for a data- segment selector to 0. With the RPL set to 0, only the CPL checks, not the RPL checks, will provide protection against deliberate, direct attempts to violate privilege-level security for the data segment. To prevent these types of privilege-level-check violations, a program or procedure can check access privileges whenever it receives a data-segment selector from another procedure (see Section 5.10.4, "Checking Caller Access Privileges (ARPL Instruction)").

5.6.1 Accessing Data in Code Segments

In some instances it may be desirable to access data structures that are contained in a code segment. The following methods of accessing data in code segments are possible:

- Load a data-segment register with a segment selector for a nonconforming, readable, code segment.
- Load a data-segment register with a segment selector for a conforming, readable, code segment.
- Use a code-segment override prefix (CS) to read a readable, code segment whose selector is already loaded in the CS register.

The same rules for accessing data segments apply to method 1. Method 2 is always valid because the privilege level of a conforming code segment is effectively the same as the CPL, regardless of its DPL. Method 3 is always valid because the DPL of the code segment selected by the CS register is the same as the CPL.

5.7 PRIVILEGE LEVEL CHECKING WHEN LOADING THE SS REGISTER

Privilege level checking also occurs when the SS register is loaded with the segment selector for a stack segment. Here all privilege levels related to the stack segment must match the CPL; that is, the CPL, the RPL of the stack-segment selector, and the DPL of the stack-segment descriptor must be the same. If the RPL and DPL are not equal to the CPL, a general-protection exception (#GP) is generated.

5.8 PRIVILEGE LEVEL CHECKING WHEN TRANSFERRING PROGRAM CONTROL BETWEEN CODE SEGMENTS

To transfer program control from one code segment to another, the segment selector for the destination code segment must be loaded into the code-segment register (CS). As part of this loading process, the processor examines the segment descriptor for the destination code segment and performs various limit, type, and privilege checks. If these checks are successful, the CS register is loaded, program control is transferred to the new code segment, and program execution begins at the instruction pointed to by the EIP register.

Program control transfers are carried out with the JMP, CALL, RET, SYSENTER, SYSEXIT, SYSCALL, SYSRET, INT *n*, and IRET instructions, as well as by the exception and interrupt mechanisms. Exceptions, interrupts, and the IRET instruction are special cases discussed in Chapter 6, "Interrupt and Exception Handling." This chapter discusses only the JMP, CALL, RET, SYSENTER, SYSEXIT, SYSCALL, and SYSRET instructions.

A JMP or CALL instruction can reference another code segment in any of four ways:

- The target operand contains the segment selector for the target code segment.
- The target operand points to a call-gate descriptor, which contains the segment selector for the target code segment.
- The target operand points to a TSS, which contains the segment selector for the target code segment.
- The target operand points to a task gate, which points to a TSS, which in turn contains the segment selector for the target code segment.

The following sections describe first two types of references. See Section 8.3, "Task Switching," for information on transferring program control through a task gate and/or TSS.

The SYSENTER and SYSEXIT instructions are special instructions for making fast calls to and returns from operating system or executive procedures. These instructions are discussed in Section 5.8.7, "Performing Fast Calls to System Procedures with the SYSENTER and SYSEXIT Instructions."

The SYCALL and SYSRET instructions are special instructions for making fast calls to and returns from operating system or executive procedures in 64-bit mode. These instructions are discussed in Section 5.8.8, "Fast System Calls in 64-Bit Mode."

5.8.1 Direct Calls or Jumps to Code Segments

The near forms of the JMP, CALL, and RET instructions transfer program control within the current code segment, so privilege-level checks are not performed. The far forms of the JMP, CALL, and RET instructions transfer control to other code segments, so the processor does perform privilege-level checks.

When transferring program control to another code segment without going through a call gate, the processor examines four kinds of privilege level and type information (see Figure 5-6):

- The CPL. (Here, the CPL is the privilege level of the calling code segment; that is, the code segment that contains the procedure that is making the call or jump.)

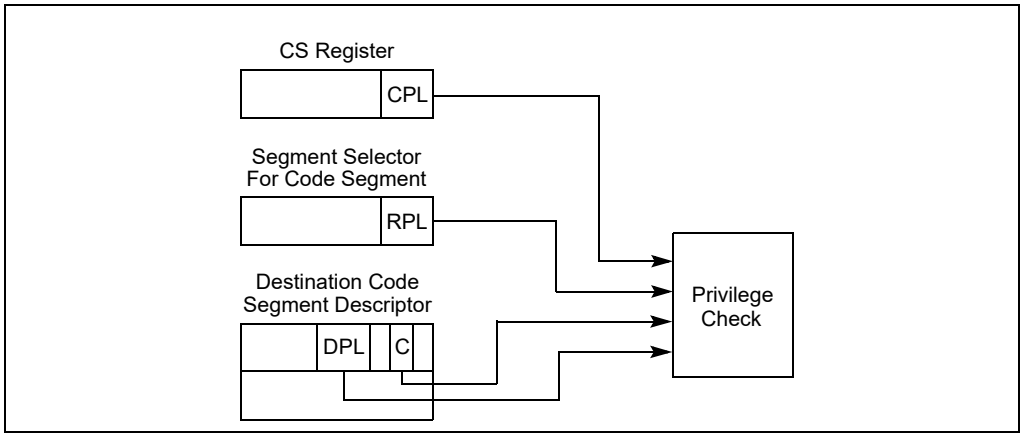

Figure 5-6. Privilege Check for Control Transfer Without Using a Gate

- The DPL of the segment descriptor for the destination code segment that contains the called procedure.
- The RPL of the segment selector of the destination code segment.
- The conforming (C) flag in the segment descriptor for the destination code segment, which determines whether the segment is a conforming (C flag is set) or nonconforming (C flag is clear) code segment. See Section 3.4.5.1, "Code- and Data-Segment Descriptor Types," for more information about this flag.

The rules that the processor uses to check the CPL, RPL, and DPL depends on the setting of the C flag, as described in the following sections.

5.8.1.1 Accessing Nonconforming Code Segments

When accessing nonconforming code segments, the CPL of the calling procedure must be equal to the DPL of the destination code segment; otherwise, the processor generates a general-protection exception (#GP). For example in Figure 5-7:

- Code segment C is a nonconforming code segment. A procedure in code segment A can call a procedure in code segment C (using segment selector C1) because they are at the same privilege level (CPL of code segment A is equal to the DPL of code segment C).
- A procedure in code segment B cannot call a procedure in code segment C (using segment selector C2 or C1) because the two code segments are at different privilege levels.

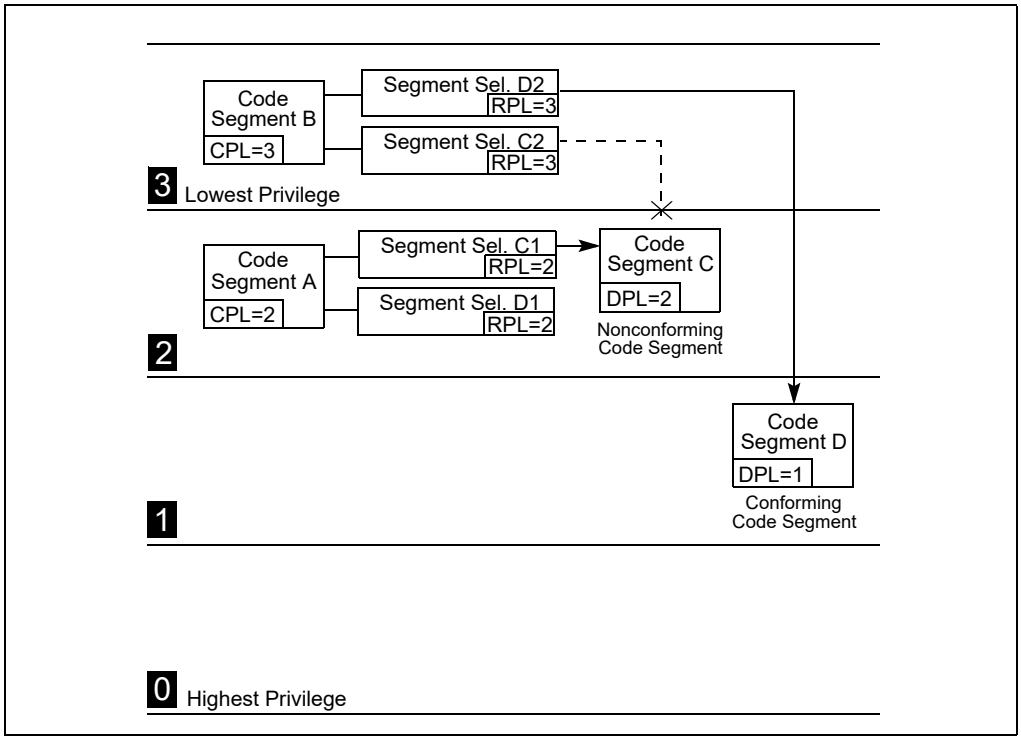

Figure 5-7. Examples of Accessing Conforming and Nonconforming Code Segments From Various Privilege Levels

The RPL of the segment selector that points to a nonconforming code segment has a limited effect on the privilege check. The RPL must be numerically less than or equal to the CPL of the calling procedure for a successful control transfer to occur. So, in the example in Figure 5-7, the RPLs of segment selectors C1 and C2 could legally be set to 0, 1, or 2, but not to 3.

When the segment selector of a nonconforming code segment is loaded into the CS register, the privilege level field is not changed; that is, it remains at the CPL (which is the privilege level of the calling procedure). This is true, even if the RPL of the segment selector is different from the CPL.

5.8.1.2 Accessing Conforming Code Segments

When accessing conforming code segments, the CPL of the calling procedure may be numerically equal to or greater than (less privileged) the DPL of the destination code segment; the processor generates a general-protection exception (#GP) only if the CPL is less than the DPL. (The segment selector RPL for the destination code segment is not checked if the segment is a conforming code segment.)

In the example in Figure 5-7, code segment D is a conforming code segment. Therefore, calling procedures in both code segment A and B can access code segment D (using either segment selector D1 or D2, respectively), because they both have CPLs that are greater than or equal to the DPL of the conforming code segment. **For conforming code segments, the DPL represents the numerically lowest privilege level that a calling procedure may be at to successfully make a call to the code segment.**

(Note that segments selectors D1 and D2 are identical except for their respective RPLs. But since RPLs are not checked when accessing conforming code segments, the two segment selectors are essentially interchangeable.)

When program control is transferred to a conforming code segment, the CPL does not change, even if the DPL of the destination code segment is less than the CPL. This situation is the only one where the CPL may be different from the DPL of the current code segment. Also, since the CPL does not change, no stack switch occurs.

Conforming segments are used for code modules such as math libraries and exception handlers, which support applications but do not require access to protected system facilities. These modules are part of the operating system or executive software, but they can be executed at numerically higher privilege levels (less privileged levels). Keeping the CPL at the level of a calling code segment when switching to a conforming code segment

prevents an application program from accessing nonconforming code segments while at the privilege level (DPL) of a conforming code segment and thus prevents it from accessing more privileged data.

Most code segments are nonconforming. For these segments, program control can be transferred only to code segments at the same level of privilege, unless the transfer is carried out through a call gate, as described in the following sections.

5.8.2 Gate Descriptors

To provide controlled access to code segments with different privilege levels, the processor provides special set of descriptors called gate descriptors. There are four kinds of gate descriptors:

- Call gates
- Trap gates
- Interrupt gates
- Task gates

Task gates are used for task switching and are discussed in Chapter 8, "Task Management". Trap and interrupt gates are special kinds of call gates used for calling exception and interrupt handlers. The are described in Chapter 6, "Interrupt and Exception Handling." This chapter is concerned only with call gates.

5.8.3 Call Gates

Call gates facilitate controlled transfers of program control between different privilege levels. They are typically used only in operating systems or executives that use the privilege-level protection mechanism. Call gates are also useful for transferring program control between 16-bit and 32-bit code segments, as described in Section 22.4, "Transferring Control Among Mixed-Size Code Segments."

Figure 5-8 shows the format of a call-gate descriptor. A call-gate descriptor may reside in the GDT or in an LDT, but not in the interrupt descriptor table (IDT). It performs six functions:

- It specifies the code segment to be accessed.
- It defines an entry point for a procedure in the specified code segment.
- It specifies the privilege level required for a caller trying to access the procedure.

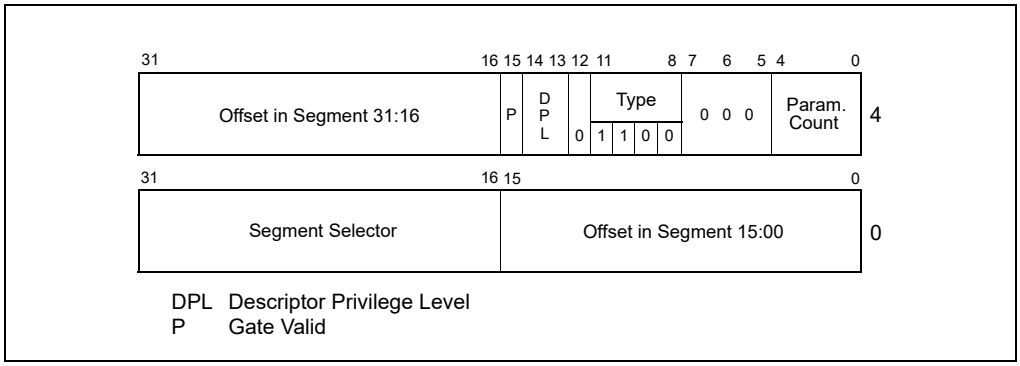

Figure 5-8. Call-Gate Descriptor

- If a stack switch occurs, it specifies the number of optional parameters to be copied between stacks.
- It defines the size of values to be pushed onto the target stack: 16-bit gates force 16-bit pushes and 32-bit gates force 32-bit pushes.
- It specifies whether the call-gate descriptor is valid.

The segment selector field in a call gate specifies the code segment to be accessed. The offset field specifies the entry point in the code segment. This entry point is generally to the first instruction of a specific procedure. The DPL field indicates the privilege level of the call gate, which in turn is the privilege level required to access the selected

procedure through the gate. The P flag indicates whether the call-gate descriptor is valid. (The presence of the code segment to which the gate points is indicated by the P flag in the code segment's descriptor.) The parameter count field indicates the number of parameters to copy from the calling procedures stack to the new stack if a stack switch occurs (see Section 5.8.5, "Stack Switching"). The parameter count specifies the number of words for 16-bit call gates and doublewords for 32-bit call gates.

Note that the P flag in a gate descriptor is normally always set to 1. If it is set to 0, a not present (#NP) exception is generated when a program attempts to access the descriptor. The operating system can use the P flag for special purposes. For example, it could be used to track the number of times the gate is used. Here, the P flag is initially set to 0 causing a trap to the not-present exception handler. The exception handler then increments a counter and sets the P flag to 1, so that on returning from the handler, the gate descriptor will be valid.

5.8.3.1 IA-32e Mode Call Gates

Call-gate descriptors in 32-bit mode provide a 32-bit offset for the instruction pointer (EIP); 64-bit extensions double the size of 32-bit mode call gates in order to store 64-bit instruction pointers (RIP). See Figure 5-9:

- The first eight bytes (bytes 7:0) of a 64-bit mode call gate are similar but not identical to legacy 32-bit mode call gates. The parameter-copy-count field has been removed.
- Bytes 11:8 hold the upper 32 bits of the target-segment offset in canonical form. A general-protection exception (#GP) is generated if software attempts to use a call gate with a target offset that is not in canonical form.
- 16-byte descriptors may reside in the same descriptor table with 16-bit and 32-bit descriptors. A type field, used for consistency checking, is defined in bits 12:8 of the 64-bit descriptor's highest dword (cleared to zero). A general-protection exception (#GP) results if an attempt is made to access the upper half of a 64-bit mode descriptor as a 32-bit mode descriptor.

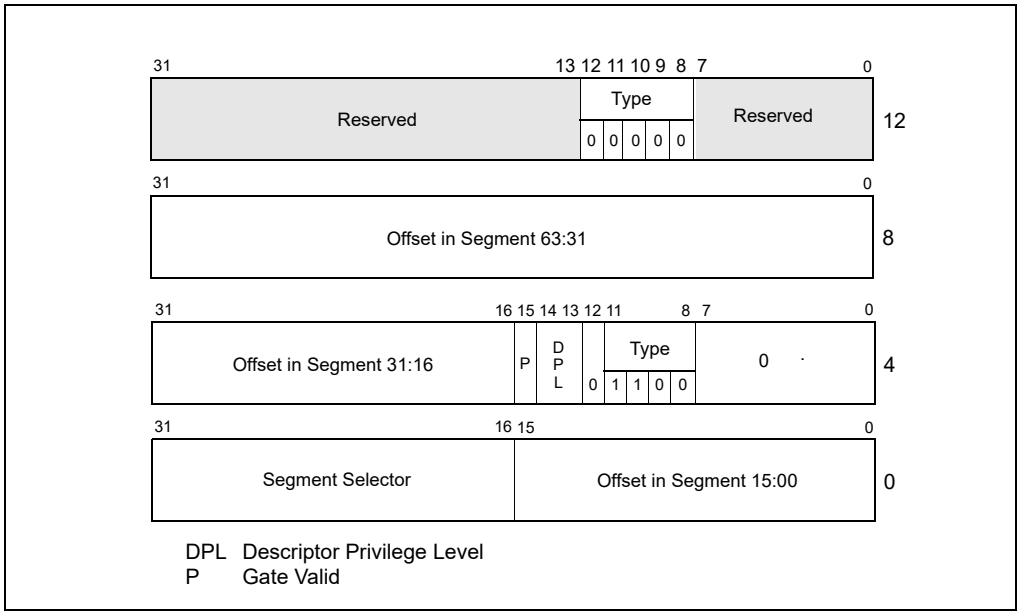

Figure 5-9. Call-Gate Descriptor in IA-32e Mode

- Target code segments referenced by a 64-bit call gate must be 64-bit code segments (CS.L = 1, CS.D = 0). If not, the reference generates a general-protection exception, #GP (CS selector).
- Only 64-bit mode call gates can be referenced in IA-32e mode (64-bit mode and compatibility mode). The legacy 32-bit mode call gate type (0CH) is redefined in IA-32e mode as a 64-bit call-gate type; no 32-bit call-gate type exists in IA-32e mode.

- If a far call references a 16-bit call gate type (04H) in IA-32e mode, a general-protection exception (#GP) is generated.

When a call references a 64-bit mode call gate, actions taken are identical to those taken in 32-bit mode, with the following exceptions:

- Stack pushes are made in eight-byte increments.
- A 64-bit RIP is pushed onto the stack.
- Parameter copying is not performed.

Use a matching far-return instruction size for correct operation (returns from 64-bit calls must be performed with a 64-bit operand-size return to process the stack correctly).

5.8.4 Accessing a Code Segment Through a Call Gate

To access a call gate, a far pointer to the gate is provided as a target operand in a CALL or JMP instruction. The segment selector from this pointer identifies the call gate (see Figure 5-10); the offset from the pointer is required, but not used or checked by the processor. (The offset can be set to any value.)

When the processor has accessed the call gate, it uses the segment selector from the call gate to locate the segment descriptor for the destination code segment. (This segment descriptor can be in the GDT or the LDT.) It then combines the base address from the code-segment descriptor with the offset from the call gate to form the linear address of the procedure entry point in the code segment.

As shown in Figure 5-11, four different privilege levels are used to check the validity of a program control transfer through a call gate:

- The CPL (current privilege level).
- The RPL (requestor's privilege level) of the call gate's selector.
- The DPL (descriptor privilege level) of the call gate descriptor.
- The DPL of the segment descriptor of the destination code segment.

The C flag (conforming) in the segment descriptor for the destination code segment is also checked.

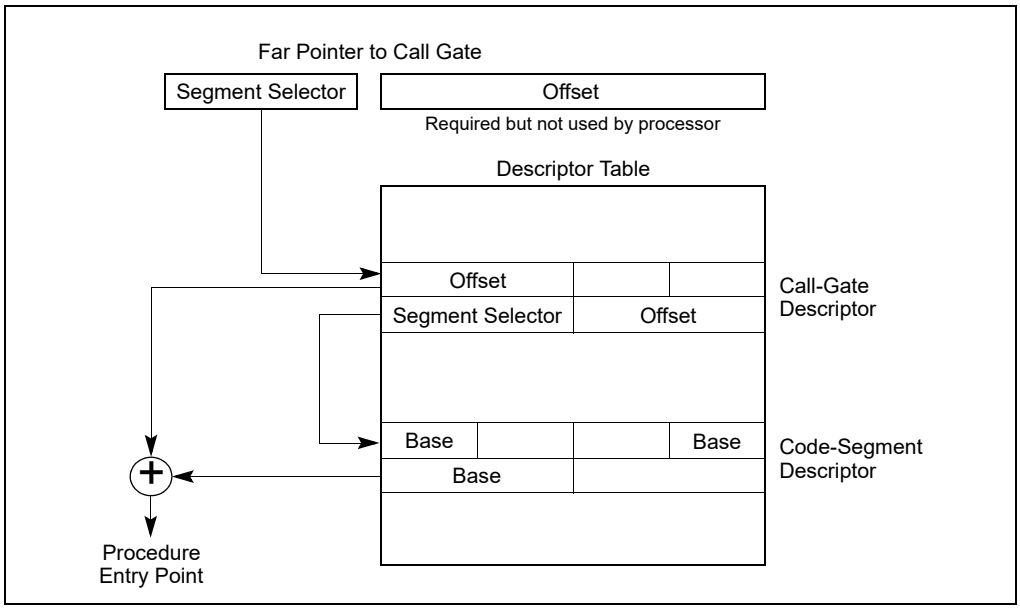

Figure 5-10. Call-Gate Mechanism

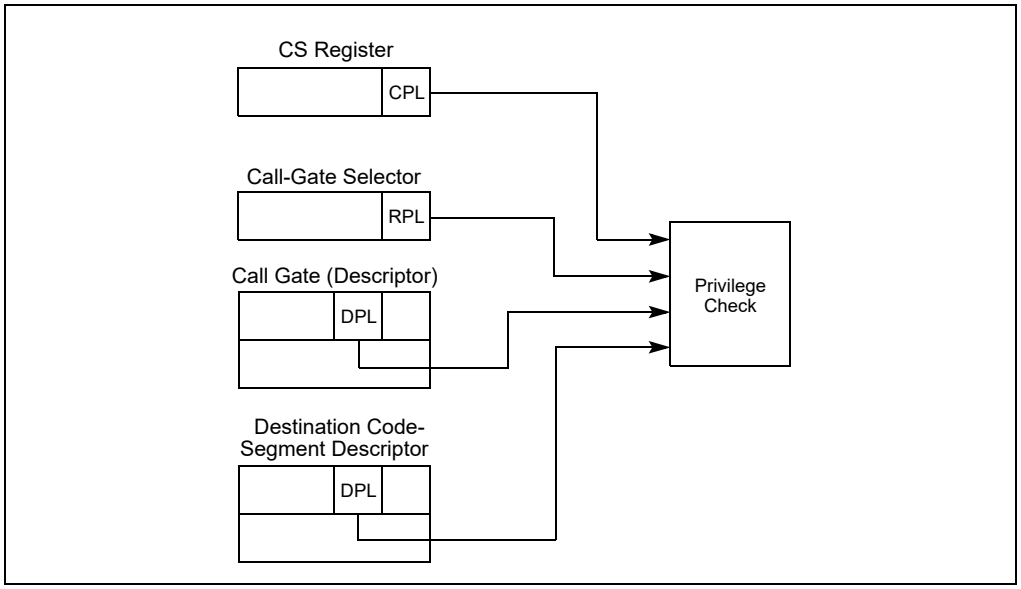

Figure 5-11. Privilege Check for Control Transfer with Call Gate

The privilege checking rules are different depending on whether the control transfer was initiated with a CALL or a JMP instruction, as shown in Table 5-1.

Table 5-1. Privilege Check Rules for Call Gates

Instruction	Privilege Check Rules
CALL	CPL ≤ call gate DPL; RPL ≤ call gate DPL Destination conforming code segment DPL ≤ CPL Destination nonconforming code segment DPL ≤ CPL
JMP	CPL ≤ call gate DPL; RPL ≤ call gate DPL Destination conforming code segment DPL ≤ CPL Destination nonconforming code segment DPL = CPL

The DPL field of the call-gate descriptor specifies the numerically highest privilege level from which a calling procedure can access the call gate; that is, to access a call gate, the CPL of a calling procedure must be equal to or less than the DPL of the call gate. For example, in Figure 5-15, call gate A has a DPL of 3. So calling procedures at all CPLs (0 through 3) can access this call gate, which includes calling procedures in code segments A, B, and C. Call gate B has a DPL of 2, so only calling procedures at a CPL or 0, 1, or 2 can access call gate B, which includes calling procedures in code segments B and C. The dotted line shows that a calling procedure in code segment A cannot access call gate B.

The RPL of the segment selector to a call gate must satisfy the same test as the CPL of the calling procedure; that is, the RPL must be less than or equal to the DPL of the call gate. In the example in Figure 5-15, a calling procedure in code segment C can access call gate B using gate selector B2 or B1, but it could not use gate selector B3 to access call gate B.

If the privilege checks between the calling procedure and call gate are successful, the processor then checks the DPL of the code-segment descriptor against the CPL of the calling procedure. Here, the privilege check rules vary between CALL and JMP instructions. Only CALL instructions can use call gates to transfer program control to more privileged (numerically lower privilege level) nonconforming code segments; that is, to nonconforming code segments with a DPL less than the CPL. A JMP instruction can use a call gate only to transfer program control to a nonconforming code segment with a DPL equal to the CPL. CALL and JMP instruction can both transfer program control to a more privileged conforming code segment; that is, to a conforming code segment with a DPL less than or equal to the CPL.

If a call is made to a more privileged (numerically lower privilege level) nonconforming destination code segment, the CPL is lowered to the DPL of the destination code segment and a stack switch occurs (see Section 5.8.5, "Stack Switching"). If a call or jump is made to a more privileged conforming destination code segment, the CPL is not changed and no stack switch occurs.

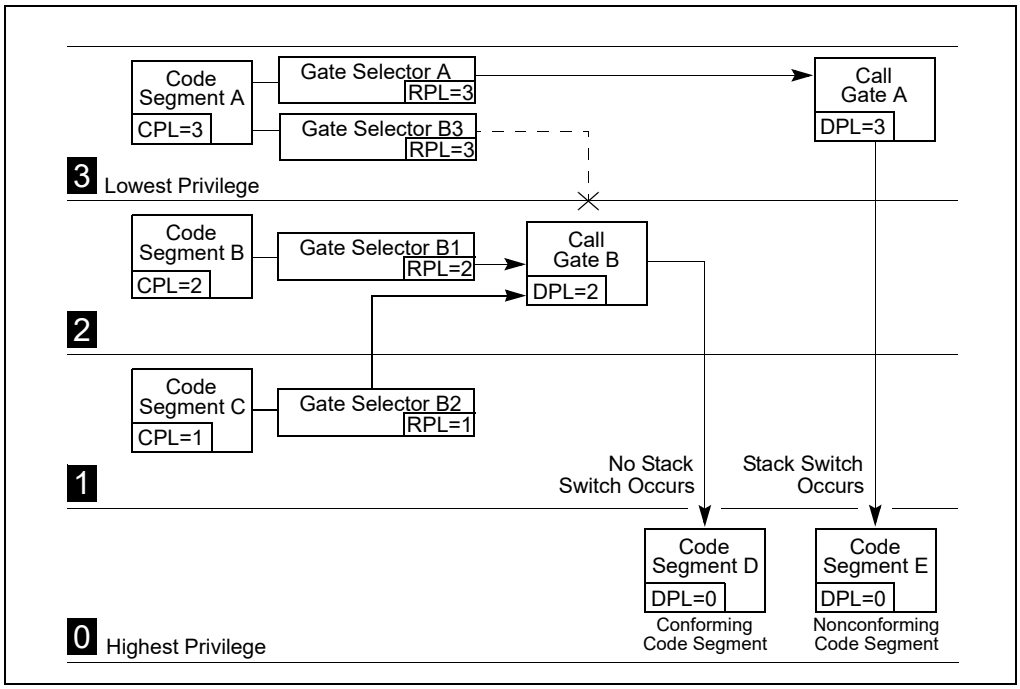

Figure 5-12. Example of Accessing Call Gates At Various Privilege Levels

Call gates allow a single code segment to have procedures that can be accessed at different privilege levels. For example, an operating system located in a code segment may have some services which are intended to be used by both the operating system and application software (such as procedures for handling character I/O). Call gates for these procedures can be set up that allow access at all privilege levels (0 through 3). More privileged call gates (with DPLs of 0 or 1) can then be set up for other operating system services that are intended to be used only by the operating system (such as procedures that initialize device drivers).

5.8.5 Stack Switching

Whenever a call gate is used to transfer program control to a more privileged nonconforming code segment (that is, when the DPL of the nonconforming destination code segment is less than the CPL), the processor automatically switches to the stack for the destination code segment's privilege level. This stack switching is carried out to prevent more privileged procedures from crashing due to insufficient stack space. It also prevents less privileged procedures from interfering (by accident or intent) with more privileged procedures through a shared stack.

Each task must define up to 4 stacks: one for applications code (running at privilege level 3) and one for each of the privilege levels 2, 1, and 0 that are used. (If only two privilege levels are used [3 and 0], then only two stacks must be defined.) Each of these stacks is located in a separate segment and is identified with a segment selector and an offset into the stack segment (a stack pointer).

The segment selector and stack pointer for the privilege level 3 stack is located in the SS and ESP registers, respectively, when privilege-level-3 code is being executed and is automatically stored on the called procedure's stack when a stack switch occurs.

Pointers to the privilege level 0, 1, and 2 stacks are stored in the TSS for the currently running task (see Figure 8-2). Each of these pointers consists of a segment selector and a stack pointer (loaded into the ESP register). These initial pointers are strictly read-only values. The processor does not change them while the task is running. They are used only to create new stacks when calls are made to more privileged levels (numerically lower

privilege levels). These stacks are disposed of when a return is made from the called procedure. The next time the procedure is called, a new stack is created using the initial stack pointer. (The TSS does not specify a stack for privilege level 3 because the processor does not allow a transfer of program control from a procedure running at a CPL of 0, 1, or 2 to a procedure running at a CPL of 3, except on a return.)

The operating system is responsible for creating stacks and stack-segment descriptors for all the privilege levels to be used and for loading initial pointers for these stacks into the TSS. Each stack must be read/write accessible (as specified in the type field of its segment descriptor) and must contain enough space (as specified in the limit field) to hold the following items:

- The contents of the SS, ESP, CS, and EIP registers for the calling procedure.
- The parameters and temporary variables required by the called procedure.
- The EFLAGS register and error code, when implicit calls are made to an exception or interrupt handler.

The stack will need to require enough space to contain many frames of these items, because procedures often call other procedures, and an operating system may support nesting of multiple interrupts. Each stack should be large enough to allow for the worst case nesting scenario at its privilege level.

(If the operating system does not use the processor's multitasking mechanism, it still must create at least one TSS for this stack-related purpose.)

When a procedure call through a call gate results in a change in privilege level, the processor performs the following steps to switch stacks and begin execution of the called procedure at a new privilege level:

1. Uses the DPL of the destination code segment (the new CPL) to select a pointer to the new stack (segment selector and stack pointer) from the TSS.
2. Reads the segment selector and stack pointer for the stack to be switched to from the current TSS. Any limit violations detected while reading the stack-segment selector, stack pointer, or stack-segment descriptor cause an invalid TSS (#TS) exception to be generated.
3. Checks the stack-segment descriptor for the proper privileges and type and generates an invalid TSS (#TS) exception if violations are detected.
4. Temporarily saves the current values of the SS and ESP registers.
5. Loads the segment selector and stack pointer for the new stack in the SS and ESP registers.
6. Pushes the temporarily saved values for the SS and ESP registers (for the calling procedure) onto the new stack (see Figure 5-13).
7. Copies the number of parameter specified in the parameter count field of the call gate from the calling procedure's stack to the new stack. If the count is 0, no parameters are copied.
8. Pushes the return instruction pointer (the current contents of the CS and EIP registers) onto the new stack.
9. Loads the segment selector for the new code segment and the new instruction pointer from the call gate into the CS and EIP registers, respectively, and begins execution of the called procedure.

See the description of the CALL instruction in Chapter 3, *Instruction Set Reference*, in the *IA-32 Intel Architecture Software Developer's Manual, Volume 2*, for a detailed description of the privilege level checks and other protection checks that the processor performs on a far call through a call gate.

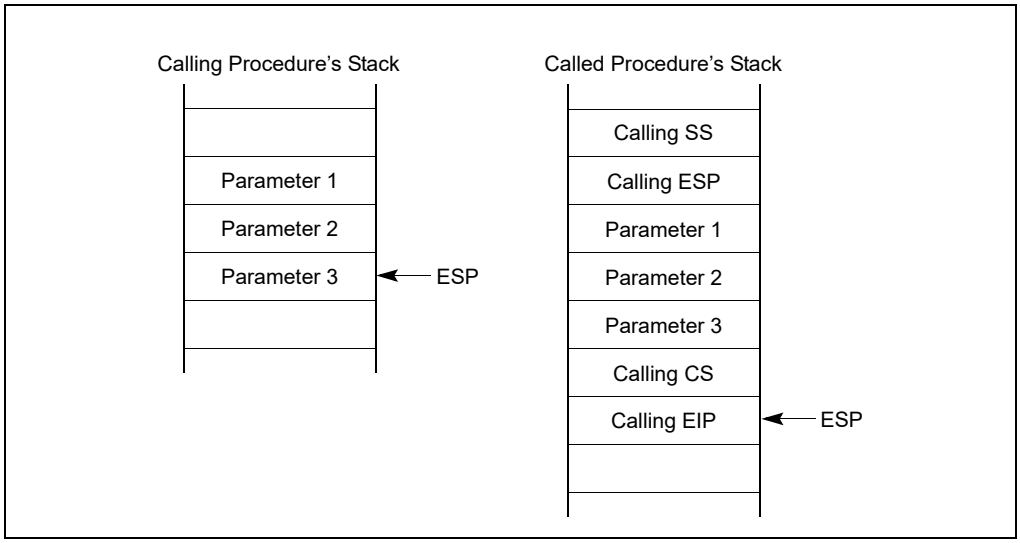

Figure 5-13. Stack Switching During an Interprivilege-Level Call

The parameter count field in a call gate specifies the number of data items (up to 31) that the processor should copy from the calling procedure's stack to the stack of the called procedure. If more than 31 data items need to be passed to the called procedure, one of the parameters can be a pointer to a data structure, or the saved contents of the SS and ESP registers may be used to access parameters in the old stack space. The size of the data items passed to the called procedure depends on the call gate size, as described in Section 5.8.3, "Call Gates."

5.8.5.1 Stack Switching in 64-bit Mode

Although protection-check rules for call gates are unchanged from 32-bit mode, stack-switch changes in 64-bit mode are different.

When stacks are switched as part of a 64-bit mode privilege-level change through a call gate, a new SS (stack segment) descriptor is not loaded; 64-bit mode only loads an inner-level RSP from the TSS. The new SS is forced to NULL and the SS selector's RPL field is forced to the new CPL. The new SS is set to NULL in order to handle nested far transfers (far CALL, INTn, interrupts, and exceptions). The old SS and RSP are saved on the new stack.

On a subsequent far RET, the old SS is popped from the stack and loaded into the SS register. See Table 5-2.

Table 5-2. 64-Bit-Mode Stack Layout After Far CALL with CPL Change

32-bit Mode				IA-32e mode	
Old SS Selector	+12			+24	Old SS Selector
Old ESP	+8			+16	Old RSP
CS Selector	+4			+8	Old CS Selector
EIP	0	**ESP**	**RSP**	0	RIP
< 4 Bytes >					< 8 Bytes >

In 64-bit mode, stack operations resulting from a privilege-level-changing far call or far return are eight-bytes wide and change the RSP by eight. The mode does not support the automatic parameter-copy feature found in 32-bit mode. The call-gate count field is ignored. Software can access the old stack, if necessary, by referencing the old stack-segment selector and stack pointer saved on the new process stack.

In 64-bit mode, far RET is allowed to load a NULL SS under certain conditions. If the target mode is 64-bit mode and the target CPL ≠ 3, IRET allows SS to be loaded with a NULL selector. If the called procedure itself is interrupted, the NULL SS is pushed on the stack frame. On the subsequent far RET, the NULL SS on the stack acts as a flag to tell the processor not to load a new SS descriptor.

5.8.6 Returning from a Called Procedure

The RET instruction can be used to perform a near return, a far return at the same privilege level, and a far return to a different privilege level. This instruction is intended to execute returns from procedures that were called with a CALL instruction. It does not support returns from a JMP instruction, because the JMP instruction does not save a return instruction pointer on the stack.

A near return only transfers program control within the current code segment; therefore, the processor performs only a limit check. When the processor pops the return instruction pointer from the stack into the EIP register, it checks that the pointer does not exceed the limit of the current code segment.

On a far return at the same privilege level, the processor pops both a segment selector for the code segment being returned to and a return instruction pointer from the stack. Under normal conditions, these pointers should be valid, because they were pushed on the stack by the CALL instruction. However, the processor performs privilege checks to detect situations where the current procedure might have altered the pointer or failed to maintain the stack properly.

A far return that requires a privilege-level change is only allowed when returning to a less privileged level (that is, the DPL of the return code segment is numerically greater than the CPL). The processor uses the RPL field from the CS register value saved for the calling procedure (see Figure 5-13) to determine if a return to a numerically higher privilege level is required. If the RPL is numerically greater (less privileged) than the CPL, a return across privilege levels occurs.

The processor performs the following steps when performing a far return to a calling procedure (see Figures 6-2 and 6-4 in the *Intel® 64 and IA-32 Architectures Software Developer's Manual, Volume 1*, for an illustration of the stack contents prior to and after a return):

1. Checks the RPL field of the saved CS register value to determine if a privilege level change is required on the return.
2. Loads the CS and EIP registers with the values on the called procedure's stack. (Type and privilege level checks are performed on the code-segment descriptor and RPL of the code- segment selector.)
3. (If the RET instruction includes a parameter count operand and the return requires a privilege level change.) Adds the parameter count (in bytes obtained from the RET instruction) to the current ESP register value (after popping the CS and EIP values), to step past the parameters on the called procedure's stack. The resulting value in the ESP register points to the saved SS and ESP values for the calling procedure's stack. (Note that the byte count in the RET instruction must be chosen to match the parameter count in the call gate that the calling procedure referenced when it made the original call multiplied by the size of the parameters.)
4. (If the return requires a privilege level change.) Loads the SS and ESP registers with the saved SS and ESP values and switches back to the calling procedure's stack. The SS and ESP values for the called procedure's stack are discarded. Any limit violations detected while loading the stack-segment selector or stack pointer cause a general-protection exception (#GP) to be generated. The new stack-segment descriptor is also checked for type and privilege violations.
5. (If the RET instruction includes a parameter count operand.) Adds the parameter count (in bytes obtained from the RET instruction) to the current ESP register value, to step past the parameters on the calling procedure's stack. The resulting ESP value is not checked against the limit of the stack segment. If the ESP value is beyond the limit, that fact is not recognized until the next stack operation.
6. (If the return requires a privilege level change.) Checks the contents of the DS, ES, FS, and GS segment registers. If any of these registers refer to segments whose DPL is less than the new CPL (excluding conforming code segments), the segment register is loaded with a null segment selector.

See the description of the RET instruction in Chapter 4 of the *Intel® 64 and IA-32 Architectures Software Developer's Manual, Volume 2B*, for a detailed description of the privilege level checks and other protection checks that the processor performs on a far return.

5.8.7 Performing Fast Calls to System Procedures with the SYSENTER and SYSEXIT Instructions

The SYSENTER and SYSEXIT instructions were introduced into the IA-32 architecture in the Pentium II processors for the purpose of providing a fast (low overhead) mechanism for calling operating system or executive procedures.

SYSENTER is intended for use by user code running at privilege level 3 to access operating system or executive procedures running at privilege level 0. SYSEXIT is intended for use by privilege level 0 operating system or executive procedures for fast returns to privilege level 3 user code. SYSENTER can be executed from privilege levels 3, 2, 1, or 0; SYSEXIT can only be executed from privilege level 0.

The SYSENTER and SYSEXIT instructions are companion instructions, but they do not constitute a call/return pair. This is because SYSENTER does not save any state information for use by SYSEXIT on a return.

The target instruction and stack pointer for these instructions are not specified through instruction operands. Instead, they are specified through parameters entered in MSRs and general-purpose registers.

For SYSENTER, target fields are generated using the following sources:

- **Target code segment** — Reads this from IA32_SYSENTER_CS.
- **Target instruction** — Reads this from IA32_SYSENTER_EIP.
- **Stack segment** — Computed by adding 8 to the value in IA32_SYSENTER_CS.
- **Stack pointer** — Reads this from the IA32_SYSENTER_ESP.

For SYSEXIT, target fields are generated using the following sources:

- **Target code segment** — Computed by adding 16 to the value in the IA32_SYSENTER_CS.
- **Target instruction** — Reads this from EDX.
- **Stack segment** — Computed by adding 24 to the value in IA32_SYSENTER_CS.
- **Stack pointer** — Reads this from ECX.

The SYSENTER and SYSEXIT instructions perform "fast" calls and returns because they force the processor into a predefined privilege level 0 state when SYSENTER is executed and into a predefined privilege level 3 state when SYSEXIT is executed. By forcing predefined and consistent processor states, the number of privilege checks ordinarily required to perform a far call to another privilege levels are greatly reduced. Also, by predefining the target context state in MSRs and general-purpose registers eliminates all memory accesses except when fetching the target code.

Any additional state that needs to be saved to allow a return to the calling procedure must be saved explicitly by the calling procedure or be predefined through programming conventions.

5.8.7.1 SYSENTER and SYSEXIT Instructions in IA-32e Mode

For Intel 64 processors, the SYSENTER and SYSEXIT instructions are enhanced to allow fast system calls from user code running at privilege level 3 (in compatibility mode or 64-bit mode) to 64-bit executive procedures running at privilege level 0. IA32_SYSENTER_EIP MSR and IA32_SYSENTER_ESP MSR are expanded to hold 64-bit addresses. If IA-32e mode is inactive, only the lower 32-bit addresses stored in these MSRs are used. The WRMSR instruction ensures that the addresses stored in these MSRs are canonical. Note that, in 64-bit mode, IA32_SYSENTER_CS must not contain a NULL selector.

When SYSENTER transfers control, the following fields are generated and bits set:

- **Target code segment** — Reads non-NULL selector from IA32_SYSENTER_CS.
- **New CS attributes** — CS base = 0, CS limit = FFFFFFFFH.
- **Target instruction** — Reads 64-bit canonical address from IA32_SYSENTER_EIP.
- **Stack segment** — Computed by adding 8 to the value from IA32_SYSENTER_CS.
- **Stack pointer** — Reads 64-bit canonical address from IA32_SYSENTER_ESP.
- **New SS attributes** — SS base = 0, SS limit = FFFFFFFFH.

When the SYSEXIT instruction transfers control to 64-bit mode user code using REX.W, the following fields are generated and bits set:

- **Target code segment** — Computed by adding 32 to the value in IA32_SYSENTER_CS.
- **New CS attributes** — L-bit = 1 (go to 64-bit mode).
- **Target instruction** — Reads 64-bit canonical address in RDX.
- **Stack segment** — Computed by adding 40 to the value of IA32_SYSENTER_CS.

- **Stack pointer** — Update RSP using 64-bit canonical address in RCX.

When SYSEXIT transfers control to compatibility mode user code when the operand size attribute is 32 bits, the following fields are generated and bits set:

- **Target code segment** — Computed by adding 16 to the value in IA32_SYSENTER_CS.
- **New CS attributes** — L-bit = 0 (go to compatibility mode).
- **Target instruction** — Fetch the target instruction from 32-bit address in EDX.
- **Stack segment** — Computed by adding 24 to the value in IA32_SYSENTER_CS.
- **Stack pointer** — Update ESP from 32-bit address in ECX.

5.8.8 Fast System Calls in 64-Bit Mode

The SYSCALL and SYSRET instructions are designed for operating systems that use a flat memory model (segmentation is not used). The instructions, along with SYSENTER and SYSEXIT, are suited for IA-32e mode operation. SYSCALL and SYSRET, however, are not supported in compatibility mode (or in protected mode). Use CPUID to check if SYSCALL and SYSRET are available (CPUID.80000001H.EDX[bit 11] = 1).

SYSCALL is intended for use by user code running at privilege level 3 to access operating system or executive procedures running at privilege level 0. SYSRET is intended for use by privilege level 0 operating system or executive procedures for fast returns to privilege level 3 user code.

Stack pointers for SYSCALL/SYSRET are not specified through model specific registers. The clearing of bits in RFLAGS is programmable rather than fixed. SYSCALL/SYSRET save and restore the RFLAGS register.

For SYSCALL, the processor saves RFLAGS into R11 and the RIP of the next instruction into RCX; it then gets the privilege-level 0 target code segment, instruction pointer, stack segment, and flags as follows:

- **Target code segment** — Reads a non-NULL selector from IA32_STAR[47:32].
- **Target instruction pointer** — Reads a 64-bit address from IA32_LSTAR. (The WRMSR instruction ensures that the value of the IA32_LSTAR MSR is canonical.)
- **Stack segment** — Computed by adding 8 to the value in IA32_STAR[47:32].
- **Flags** — The processor sets RFLAGS to the logical-AND of its current value with the complement of the value in the IA32_FMASK MSR.

When SYSRET transfers control to 64-bit mode user code using REX.W, the processor gets the privilege level 3 target code segment, instruction pointer, stack segment, and flags as follows:

- **Target code segment** — Reads a non-NULL selector from IA32_STAR[63:48] + 16.
- **Target instruction pointer** — Copies the value in RCX into RIP.
- **Stack segment** — IA32_STAR[63:48] + 8.
- **EFLAGS** — Loaded from R11.

When SYSRET transfers control to 32-bit mode user code using a 32-bit operand size, the processor gets the privilege level 3 target code segment, instruction pointer, stack segment, and flags as follows:

- **Target code segment** — Reads a non-NULL selector from IA32_STAR[63:48].
- **Target instruction pointer** — Copies the value in ECX into EIP.
- **Stack segment** — IA32_STAR[63:48] + 8.
- **EFLAGS** — Loaded from R11.

It is the responsibility of the OS to ensure the descriptors in the GDT/LDT correspond to the selectors loaded by SYSCALL/SYSRET (consistent with the base, limit, and attribute values forced by the instructions).

See Figure 5-14 for the layout of IA32_STAR, IA32_LSTAR, and IA32_FMASK.

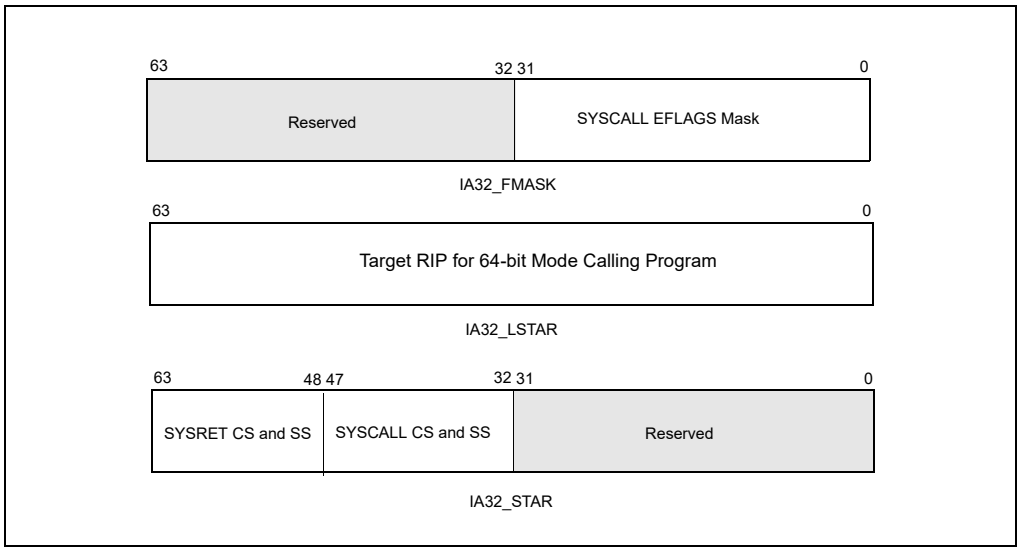

Figure 5-14. MSRs Used by SYSCALL and SYSRET

The SYSCALL instruction does not save the stack pointer, and the SYSRET instruction does not restore it. It is likely that the OS system-call handler will change the stack pointer from the user stack to the OS stack. If so, it is the responsibility of software first to save the user stack pointer. This might be done by user code, prior to executing SYSCALL, or by the OS system-call handler after SYSCALL.

Because the SYSRET instruction does not modify the stack pointer, it is necessary for software to switch back to the user stack. The OS may load the user stack pointer (if it was saved after SYSCALL) before executing SYSRET; alternatively, user code may load the stack pointer (if it was saved before SYSCALL) after receiving control from SYSRET.

If the OS loads the stack pointer before executing SYSRET, it must ensure that the handler of any interrupt or exception delivered between restoring the stack pointer and successful execution of SYSRET is not invoked with the user stack. It can do so using approaches such as the following:

- External interrupts. The OS can prevent an external interrupt from being delivered by clearing EFLAGS.IF before loading the user stack pointer.
- Nonmaskable interrupts (NMIs). The OS can ensure that the NMI handler is invoked with the correct stack by using the interrupt stack table (IST) mechanism for gate 2 (NMI) in the IDT (see Section 6.14.5, “Interrupt Stack Table”).
- General-protection exceptions (#GP). The SYSRET instruction generates #GP(0) if the value of RCX is not canonical. The OS can address this possibility using one or more of the following approaches:
  - — Confirming that the value of RCX is canonical before executing SYSRET.
  - — Using paging to ensure that the SYSCALL instruction will never save a non-canonical value into RCX.
  - — Using the IST mechanism for gate 13 (#GP) in the IDT.

5.9 PRIVILEGED INSTRUCTIONS

Some of the system instructions (called “privileged instructions”) are protected from use by application programs. The privileged instructions control system functions (such as the loading of system registers). They can be executed only when the CPL is 0 (most privileged). If one of these instructions is executed when the CPL is not 0, a general-protection exception (#GP) is generated. The following system instructions are privileged instructions:

- LGDT — Load GDT register.
- LLDT — Load LDT register.

- LTR — Load task register.
- LIDT — Load IDT register.
- MOV (control registers) — Load and store control registers.
- LMSW — Load machine status word.
- CLTS — Clear task-switched flag in register CR0.
- MOV (debug registers) — Load and store debug registers.
- INVD — Invalidate cache, without writeback.
- WBINVD — Invalidate cache, with writeback.
- INVLPG —Invalidate TLB entry.
- HLT— Halt processor.
- RDMSR — Read Model-Specific Registers.
- WRMSR —Write Model-Specific Registers.
- RDPMC — Read Performance-Monitoring Counter.
- RDTSC — Read Time-Stamp Counter.

Some of the privileged instructions are available only in the more recent families of Intel 64 and IA-32 processors (see Section 23.13, "New Instructions In the Pentium and Later IA-32 Processors").

The PCE and TSD flags in register CR4 (bits 4 and 2, respectively) enable the RDPMC and RDTSC instructions, respectively, to be executed at any CPL.

5.10 POINTER VALIDATION

When operating in protected mode, the processor validates all pointers to enforce protection between segments and maintain isolation between privilege levels. Pointer validation consists of the following checks:

1. Checking access rights to determine if the segment type is compatible with its use.
2. Checking read/write rights.
3. Checking if the pointer offset exceeds the segment limit.
4. Checking if the supplier of the pointer is allowed to access the segment.
5. Checking the offset alignment.

The processor automatically performs first, second, and third checks during instruction execution. Software must explicitly request the fourth check by issuing an ARPL instruction. The fifth check (offset alignment) is performed automatically at privilege level 3 if alignment checking is turned on. Offset alignment does not affect isolation of privilege levels.

5.10.1 Checking Access Rights (LAR Instruction)

When the processor accesses a segment using a far pointer, it performs an access rights check on the segment descriptor pointed to by the far pointer. This check is performed to determine if type and privilege level (DPL) of the segment descriptor are compatible with the operation to be performed. For example, when making a far call in protected mode, the segment-descriptor type must be for a conforming or nonconforming code segment, a call gate, a task gate, or a TSS. Then, if the call is to a nonconforming code segment, the DPL of the code segment must be equal to the CPL, and the RPL of the code segment's segment selector must be less than or equal to the DPL. If type or privilege level are found to be incompatible, the appropriate exception is generated.

To prevent type incompatibility exceptions from being generated, software can check the access rights of a segment descriptor using the LAR (load access rights) instruction. The LAR instruction specifies the segment selector for the segment descriptor whose access rights are to be checked and a destination register. The instruction then performs the following operations:

1. Check that the segment selector is not null.

2. Checks that the segment selector points to a segment descriptor that is within the descriptor table limit (GDT or LDT).
3. Checks that the segment descriptor is a code, data, LDT, call gate, task gate, or TSS segment-descriptor type.
4. If the segment is not a conforming code segment, checks if the segment descriptor is visible at the CPL (that is, if the CPL and the RPL of the segment selector are less than or equal to the DPL).
5. If the privilege level and type checks pass, loads the second doubleword of the segment descriptor into the destination register (masked by the value 00FXFF00H, where X indicates that the corresponding 4 bits are undefined) and sets the ZF flag in the EFLAGS register. If the segment selector is not visible at the current privilege level or is an invalid type for the LAR instruction, the instruction does not modify the destination register and clears the ZF flag.

Once loaded in the destination register, software can perform additional checks on the access rights information.

5.10.2 Checking Read/Write Rights (VERR and VERW Instructions)

When the processor accesses any code or data segment it checks the read/write privileges assigned to the segment to verify that the intended read or write operation is allowed. Software can check read/write rights using the VERR (verify for reading) and VERW (verify for writing) instructions. Both these instructions specify the segment selector for the segment being checked. The instructions then perform the following operations:

1. Check that the segment selector is not null.
2. Checks that the segment selector points to a segment descriptor that is within the descriptor table limit (GDT or LDT).
3. Checks that the segment descriptor is a code or data-segment descriptor type.
4. If the segment is not a conforming code segment, checks if the segment descriptor is visible at the CPL (that is, if the CPL and the RPL of the segment selector are less than or equal to the DPL).
5. Checks that the segment is readable (for the VERR instruction) or writable (for the VERW) instruction.

The VERR instruction sets the ZF flag in the EFLAGS register if the segment is visible at the CPL and readable; the VERW sets the ZF flag if the segment is visible and writable. (Code segments are never writable.) The ZF flag is cleared if any of these checks fail.

5.10.3 Checking That the Pointer Offset Is Within Limits (LSL Instruction)

When the processor accesses any segment it performs a limit check to ensure that the offset is within the limit of the segment. Software can perform this limit check using the LSL (load segment limit) instruction. Like the LAR instruction, the LSL instruction specifies the segment selector for the segment descriptor whose limit is to be checked and a destination register. The instruction then performs the following operations:

1. Check that the segment selector is not null.
2. Checks that the segment selector points to a segment descriptor that is within the descriptor table limit (GDT or LDT).
3. Checks that the segment descriptor is a code, data, LDT, or TSS segment-descriptor type.
4. If the segment is not a conforming code segment, checks if the segment descriptor is visible at the CPL (that is, if the CPL and the RPL of the segment selector less than or equal to the DPL).
5. If the privilege level and type checks pass, loads the unscrambled limit (the limit scaled according to the setting of the G flag in the segment descriptor) into the destination register and sets the ZF flag in the EFLAGS register. If the segment selector is not visible at the current privilege level or is an invalid type for the LSL instruction, the instruction does not modify the destination register and clears the ZF flag.

Once loaded in the destination register, software can compare the segment limit with the offset of a pointer.

5.10.4 Checking Caller Access Privileges (ARPL Instruction)

The requestor's privilege level (RPL) field of a segment selector is intended to carry the privilege level of a calling procedure (the calling procedure's CPL) to a called procedure. The called procedure then uses the RPL to determine if access to a segment is allowed. The RPL is said to "weaken" the privilege level of the called procedure to that of the RPL.

Operating-system procedures typically use the RPL to prevent less privileged application programs from accessing data located in more privileged segments. When an operating-system procedure (the called procedure) receives a segment selector from an application program (the calling procedure), it sets the segment selector's RPL to the privilege level of the calling procedure. Then, when the operating system uses the segment selector to access its associated segment, the processor performs privilege checks using the calling procedure's privilege level (stored in the RPL) rather than the numerically lower privilege level (the CPL) of the operating-system procedure. The RPL thus ensures that the operating system does not access a segment on behalf of an application program unless that program itself has access to the segment.

Figure 5-15 shows an example of how the processor uses the RPL field. In this example, an application program (located in code segment A) possesses a segment selector (segment selector D1) that points to a privileged data structure (that is, a data structure located in a data segment D at privilege level 0).

The application program cannot access data segment D, because it does not have sufficient privilege, but the operating system (located in code segment C) can. So, in an attempt to access data segment D, the application program executes a call to the operating system and passes segment selector D1 to the operating system as a parameter on the stack. Before passing the segment selector, the (well behaved) application program sets the RPL of the segment selector to its current privilege level (which in this example is 3). If the operating system attempts to access data segment D using segment selector D1, the processor compares the CPL (which is now 0 following the call), the RPL of segment selector D1, and the DPL of data segment D (which is 0). Since the RPL is greater than the DPL, access to data segment D is denied. The processor's protection mechanism thus protects data segment D from access by the operating system, because application program's privilege level (represented by the RPL of segment selector B) is greater than the DPL of data segment D.

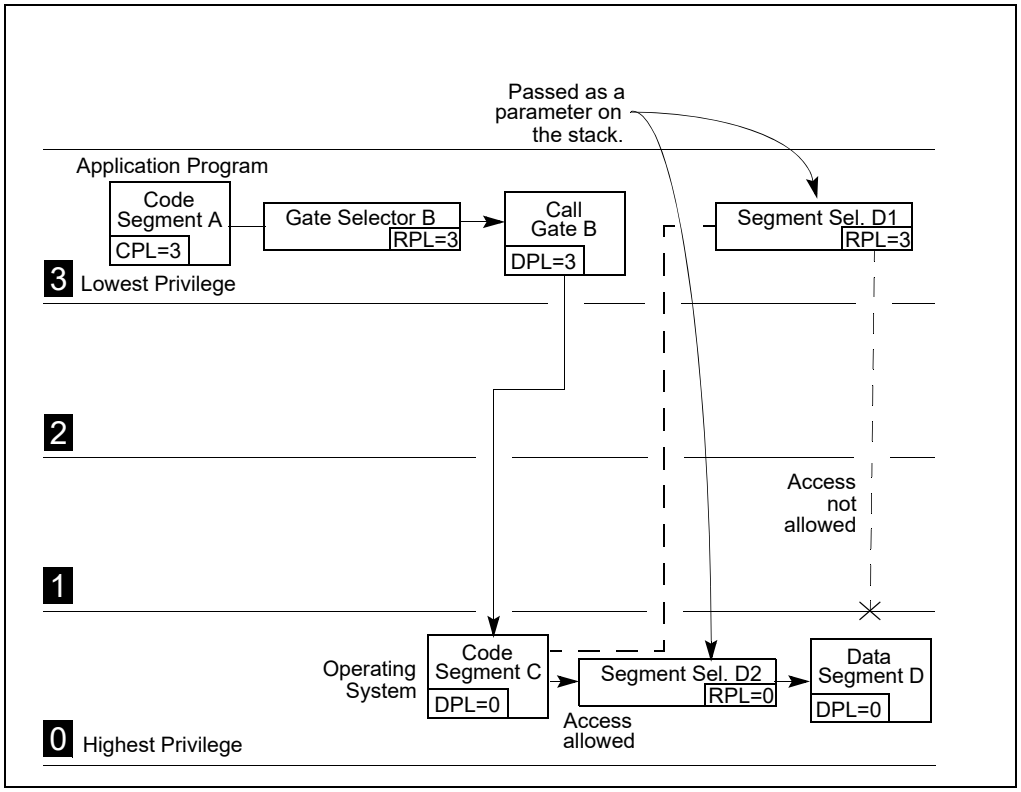

Figure 5-15. Use of RPL to Weaken Privilege Level of Called Procedure

Now assume that instead of setting the RPL of the segment selector to 3, the application program sets the RPL to 0 (segment selector D2). The operating system can now access data segment D, because its CPL and the RPL of segment selector D2 are both equal to the DPL of data segment D.

Because the application program is able to change the RPL of a segment selector to any value, it can potentially use a procedure operating at a numerically lower privilege level to access a protected data structure. This ability to lower the RPL of a segment selector breaches the processor's protection mechanism.

Because a called procedure cannot rely on the calling procedure to set the RPL correctly, operating-system procedures (executing at numerically lower privilege-levels) that receive segment selectors from numerically higher privilege-level procedures need to test the RPL of the segment selector to determine if it is at the appropriate level. The ARPL (adjust requested privilege level) instruction is provided for this purpose. This instruction adjusts the RPL of one segment selector to match that of another segment selector.

The example in Figure 5-15 demonstrates how the ARPL instruction is intended to be used. When the operating-system receives segment selector D2 from the application program, it uses the ARPL instruction to compare the RPL of the segment selector with the privilege level of the application program (represented by the code-segment selector pushed onto the stack). If the RPL is less than application program's privilege level, the ARPL instruction changes the RPL of the segment selector to match the privilege level of the application program (segment selector D1). Using this instruction thus prevents a procedure running at a numerically higher privilege level from accessing numerically lower privilege-level (more privileged) segments by lowering the RPL of a segment selector.

Note that the privilege level of the application program can be determined by reading the RPL field of the segment selector for the application-program's code segment. This segment selector is stored on the stack as part of the call to the operating system. The operating system can copy the segment selector from the stack into a register for use as an operand for the ARPL instruction.

5.10.5 Checking Alignment

When the CPL is 3, alignment of memory references can be checked by setting the AM flag in the CR0 register and the AC flag in the EFLAGS register. Unaligned memory references generate alignment exceptions (#AC). The processor does not generate alignment exceptions when operating at privilege level 0, 1, or 2. See Table 6-7 for a description of the alignment requirements when alignment checking is enabled.

5.11 PAGE-LEVEL PROTECTION

Page-level protection can be used alone or applied to segments. When page-level protection is used with the flat memory model, it allows supervisor code and data (the operating system or executive) to be protected from user code and data (application programs). It also allows pages containing code to be write protected. When the segment- and page-level protection are combined, page-level read/write protection allows more protection granularity within segments.

With page-level protection (as with segment-level protection) each memory reference is checked to verify that protection checks are satisfied. All checks are made before the memory cycle is started, and any violation prevents the cycle from starting and results in a page-fault exception being generated. Because checks are performed in parallel with address translation, there is no performance penalty.

The processor performs two page-level protection checks:

- Restriction of addressable domain (supervisor and user modes).
- Page type (read only or read/write).

Violations of either of these checks results in a page-fault exception being generated. See Chapter 6, "Interrupt 14—Page-Fault Exception (#PF)," for an explanation of the page-fault exception mechanism. This chapter describes the protection violations which lead to page-fault exceptions.

5.11.1 Page-Protection Flags

Protection information for pages is contained in two flags in a paging-structure entry (see Chapter 4): the read/write flag (bit 1) and the user/supervisor flag (bit 2). The protection checks use the flags in all paging structures.

5.11.2 Restricting Addressable Domain

The page-level protection mechanism allows restricting access to pages based on two privilege levels:

- Supervisor mode (U/S flag is 0)—(Most privileged) For the operating system or executive, other system software (such as device drivers), and protected system data (such as page tables).
- User mode (U/S flag is 1)—(Least privileged) For application code and data.

The segment privilege levels map to the page privilege levels as follows. If the processor is currently operating at a CPL of 0, 1, or 2, it is in supervisor mode; if it is operating at a CPL of 3, it is in user mode. When the processor is in supervisor mode, it can access all pages; when in user mode, it can access only user-level pages. (Note that the WP flag in control register CR0 modifies the supervisor permissions, as described in Section 5.11.3, "Page Type.")

Note that to use the page-level protection mechanism, code and data segments must be set up for at least two segment-based privilege levels: level 0 for supervisor code and data segments and level 3 for user code and data segments. (In this model, the stacks are placed in the data segments.) To minimize the use of segments, a flat memory model can be used (see Section 3.2.1, "Basic Flat Model").

Here, the user and supervisor code and data segments all begin at address zero in the linear address space and overlay each other. With this arrangement, operating-system code (running at the supervisor level) and application code (running at the user level) can execute as if there are no segments. Protection between operating-system and application code and data is provided by the processor's page-level protection mechanism.

5.11.3 Page Type

The page-level protection mechanism recognizes two page types:

- Read-only access (R/W flag is 0).
- Read/write access (R/W flag is 1).

When the processor is in supervisor mode and the WP flag in register CR0 is clear (its state following reset initialization), all pages are both readable and writable (write-protection is ignored). When the processor is in user mode, it can write only to user-mode pages that are read/write accessible. User-mode pages which are read/write or read-only are readable; supervisor-mode pages are neither readable nor writable from user mode. A page-fault exception is generated on any attempt to violate the protection rules.

Starting with the P6 family, Intel processors allow user-mode pages to be write-protected against supervisor-mode access. Setting CR0.WP = 1 enables supervisor-mode sensitivity to write protected pages. If CR0.WP = 1, read-only pages are not writable from any privilege level. This supervisor write-protect feature is useful for implementing a "copy-on-write" strategy used by some operating systems, such as UNIX*, for task creation (also called forking or spawning). When a new task is created, it is possible to copy the entire address space of the parent task. This gives the child task a complete, duplicate set of the parent's segments and pages. An alternative copy-on-write strategy saves memory space and time by mapping the child's segments and pages to the same segments and pages used by the parent task. A private copy of a page gets created only when one of the tasks writes to the page. By using the WP flag and marking the shared pages as read-only, the supervisor can detect an attempt to write to a page, and can copy the page at that time.

5.11.4 Combining Protection of Both Levels of Page Tables

For any one page, the protection attributes of its page-directory entry (first-level page table) may differ from those of its page-table entry (second-level page table). The processor checks the protection for a page in both its page-directory and the page-table entries. Table 5-3 shows the protection provided by the possible combinations of protection attributes when the WP flag is clear.

5.11.5 Overrides to Page Protection

The following types of memory accesses are checked as if they are privilege-level 0 accesses, regardless of the CPL at which the processor is currently operating:

- Access to segment descriptors in the GDT, LDT, or IDT.
- Access to an inner-privilege-level stack during an inter-privilege-level call or a call to in exception or interrupt handler, when a change of privilege level occurs.

5.12 COMBINING PAGE AND SEGMENT PROTECTION

When paging is enabled, the processor evaluates segment protection first, then evaluates page protection. If the processor detects a protection violation at either the segment level or the page level, the memory access is not carried out and an exception is generated. If an exception is generated by segmentation, no paging exception is generated.

Page-level protections cannot be used to override segment-level protection. For example, a code segment is by definition not writable. If a code segment is paged, setting the R/W flag for the pages to read-write does not make the pages writable. Attempts to write into the pages will be blocked by segment-level protection checks.

Page-level protection can be used to enhance segment-level protection. For example, if a large read-write data segment is paged, the page-protection mechanism can be used to write-protect individual pages.

Table 5-3. Combined Page-Directory and Page-Table Protection

Page-Directory Entry		Page-Table Entry		Combined Effect	
Privilege	**Access Type**	**Privilege**	**Access Type**	**Privilege**	**Access Type**
User	Read-Only	User	Read-Only	User	Read-Only
User	Read-Only	User	Read-Write	User	Read-Only
User	Read-Write	User	Read-Only	User	Read-Only
User	Read-Write	User	Read-Write	User	Read/Write
User	Read-Only	Supervisor	Read-Only	Supervisor	Read/Write*
User	Read-Only	Supervisor	Read-Write	Supervisor	Read/Write*
User	Read-Write	Supervisor	Read-Only	Supervisor	Read/Write*
User	Read-Write	Supervisor	Read-Write	Supervisor	Read/Write
Supervisor	Read-Only	User	Read-Only	Supervisor	Read/Write*
Supervisor	Read-Only	User	Read-Write	Supervisor	Read/Write*
Supervisor	Read-Write	User	Read-Only	Supervisor	Read/Write*
Supervisor	Read-Write	User	Read-Write	Supervisor	Read/Write
Supervisor	Read-Only	Supervisor	Read-Only	Supervisor	Read/Write*
Supervisor	Read-Only	Supervisor	Read-Write	Supervisor	Read/Write*
Supervisor	Read-Write	Supervisor	Read-Only	Supervisor	Read/Write*
Supervisor	Read-Write	Supervisor	Read-Write	Supervisor	Read/Write

NOTE:

* If CR0.WP = 1, access type is determined by the R/W flags of the page-directory and page-table entries. IF CR0.WP = 0, supervisor privilege permits read-write access.

5.13 PAGE-LEVEL PROTECTION AND EXECUTE-DISABLE BIT

In addition to page-level protection offered by the U/S and R/W flags, paging structures used with PAE paging, 4-level paging,[1] and 5-level paging provide the execute-disable bit (see Chapter 4, "Paging"). This bit offers additional protection for data pages.

An Intel 64 or IA-32 processor with the execute-disable bit capability can prevent data pages from being used by malicious software to execute code. This capability is provided in:

- 32-bit protected mode with PAE enabled.
- IA-32e mode.

While the execute-disable bit capability does not introduce new instructions, it does require operating systems to use a PAE-enabled environment and establish a page-granular protection policy for memory pages.

If the execute-disable bit of a memory page is set, that page can be used only as data. An attempt to execute code from a memory page with the execute-disable bit set causes a page-fault exception.

The execute-disable capability is not supported with 32-bit paging. Existing page-level protection mechanisms (see Section 5.11, "Page-Level Protection") continue to apply to memory pages independent of the execute-disable setting.

5.13.1 Detecting and Enabling the Execute-Disable Capability

Software can detect the presence of the execute-disable capability using the CPUID instruction. CPUID.80000001H:EDX.NX [bit 20] = 1 indicates the capability is available.

If the capability is available, software can enable it by setting IA32_EFER.NXE[bit 11] to 1. IA32_EFER is available if CPUID.80000001H.EDX[bit 20 or 29] = 1.

If the execute-disable capability is not available, a write to set IA32_EFER.NXE produces a #GP exception. See Table 5-4.

Table 5-4. Extended Feature Enable MSR (IA32_EFER)

63:12	11	10	9	8	7:1	0
Reserved	Execute-disable bit enable (NXE)	IA-32e mode active (LMA)	Reserved	IA-32e mode enable (LME)	Reserved	SysCall enable (SCE)

5.13.2 Execute-Disable Page Protection

The execute-disable bit in the paging structures enhances page protection for data pages. Instructions cannot be fetched from a memory page if IA32_EFER.NXE =1 and the execute-disable bit is set in any of the paging-structure entries used to map the page. Table 5-5 lists the valid usage of a page in relation to the value of execute-disable bit (bit 63) of the corresponding entry in each level of the paging structures. Execute-disable protection can be activated using the execute-disable bit at any level of the paging structure, irrespective of the corresponding entry in other levels. When execute-disable protection is not activated, the page can be used as code or data.

1. Earlier versions of this manual used the term "IA-32e paging" to identify 4-level paging.

Table 5-5. Page Level Protection Matrix with Execute-Disable Bit Capability with 4-Level Paging

Execute Disable Bit Value (Bit 63)				Valid Usage
PML4	PDP	PDE	PTE	
Bit 63 = 1	*	*	*	Data
*	Bit 63 = 1	*	*	Data
*	*	Bit 63 = 1	*	Data
*	*	*	Bit 63 = 1	Data
Bit 63 = 0	Bit 63 = 0	Bit 63 = 0	Bit 63 = 0	Data/Code

NOTES:

* Value not checked.

In legacy PAE-enabled mode, Table 5-6 and Table 5-7 show the effect of setting the execute-disable bit for code and data pages.

Table 5-6. 4-KByte Page Level Protection Matrix with Execute-Disable Bit Capability with PAE Paging

Execute Disable Bit Value (Bit 63)		Valid Usage
PDE	PTE	
Bit 63 = 1	*	Data
*	Bit 63 = 1	Data
Bit 63 = 0	Bit 63 = 0	Data/Code

NOTE:

* Value not checked.

Table 5-7. 2-MByte Page Level Protection with Execute-Disable Bit Capability with PAE Paging

Execute Disable Bit Value (Bit 63)	Valid Usage
PDE	
Bit 63 = 1	Data
Bit 63 = 0	Data/Code

5.13.3 Reserved Bit Checking

The processor enforces reserved bit checking in paging data structure entries. The bits being checked varies with paging mode and may vary with the size of physical address space.

Table 5-8 shows the reserved bits that are checked when the execute disable bit capability is enabled (CR4.PAE = 1 and IA32_EFER.NXE = 1). Table 5-8 and Table 5-9 show the following paging modes:

- Non-PAE 4-KByte paging: 4-KByte-page only paging (CR4.PAE = 0, CR4.PSE = 0).
- PSE36: 4-KByte and 4-MByte pages (CR4.PAE = 0, CR4.PSE = 1).
- PAE: 4-KByte and 2-MByte pages (CR4.PAE = 1, CR4.PSE = X).

The reserved bit checking depends on the physical address size supported by the implementation, which is reported in CPUID.80000008H. See the table note.

Table 5-8. Page Level Protection Matrix with Execute-Disable Bit Capability Enabled

Mode	Paging Mode	Check Bits
32-bit	4-KByte paging (non-PAE)	No reserved bits checked
	PSE36 - PDE, 4-MByte page	Bit [21]
	PSE36 - PDE, 4-KByte page	No reserved bits checked
	PSE36 - PTE	No reserved bits checked
	PAE - PDP table entry	Bits [63:MAXPHYADDR] & [8:5] & [2:1] *
	PAE - PDE, 2-MByte page	Bits [62:MAXPHYADDR] & [20:13] *
	PAE - PDE, 4-KByte page	Bits [62:MAXPHYADDR] *
	PAE - PTE	Bits [62:MAXPHYADDR] *
64-bit	PML5E	Bits [51:MAXPHYADDR] *
	PML4E	Bits [51:MAXPHYADDR] *
	PDPTE	Bits [51:MAXPHYADDR] *
	PDE, 2-MByte page	Bits [51:MAXPHYADDR] & [20:13] *
	PDE, 4-KByte page	Bits [51:MAXPHYADDR] *
	PTE	Bits [51:MAXPHYADDR] *

NOTES:

* MAXPHYADDR is the maximum physical address size and is indicated by CPUID.80000008H:EAX[bits 7-0].

If execute disable bit capability is not enabled or not available, reserved bit checking in 64-bit mode includes bit 63 and additional bits. This and reserved bit checking for legacy 32-bit paging modes are shown in Table 5-10.

Table 5-9. Reserved Bit Checking WIth Execute-Disable Bit Capability Not Enabled

Mode	Paging Mode	Check Bits
32-bit	KByte paging (non-PAE)	No reserved bits checked
	PSE36 - PDE, 4-MByte page	Bit [21]
	PSE36 - PDE, 4-KByte page	No reserved bits checked
	PSE36 - PTE	No reserved bits checked
	PAE - PDP table entry	Bits [63:MAXPHYADDR] & [8:5] & [2:1]*
	PAE - PDE, 2-MByte page	Bits [63:MAXPHYADDR] & [20:13]*
	PAE - PDE, 4-KByte page	Bits [63:MAXPHYADDR]*
	PAE - PTE	Bits [63:MAXPHYADDR]*
64-bit	PML5E	Bit [63], bits [51:MAXPHYADDR]*
	PML4E	Bit [63], bits [51:MAXPHYADDR]*
	PDPTE	Bit [63], bits [51:MAXPHYADDR]*
	PDE, 2-MByte page	Bit [63], bits [51:MAXPHYADDR] & [20:13]*
	PDE, 4-KByte page	Bit [63], bits [51:MAXPHYADDR]*
	PTE	Bit [63], bits [51:MAXPHYADDR]*

NOTES:

* MAXPHYADDR is the maximum physical address size and is indicated by CPUID.80000008H:EAX[bits 7-0].

5.13.4 Exception Handling

When execute disable bit capability is enabled (IA32_EFER.NXE = 1), conditions for a page fault to occur include the same conditions that apply to an Intel 64 or IA-32 processor without execute disable bit capability plus the

following new condition: an instruction fetch to a linear address that translates to physical address in a memory page that has the execute-disable bit set.

An Execute Disable Bit page fault can occur at all privilege levels. It can occur on any instruction fetch, including (but not limited to): near branches, far branches, CALL/RET/INT/IRET execution, sequential instruction fetches, and task switches. The execute-disable bit in the page translation mechanism is checked only when:

- IA32_EFER.NXE = 1.
- The instruction translation look-aside buffer (ITLB) is loaded with a page that is not already present in the ITLB.

CHAPTER 6
INTERRUPT AND EXCEPTION HANDLING

This chapter describes the interrupt and exception-handling mechanism when operating in protected mode on an Intel 64 or IA-32 processor. Most of the information provided here also applies to interrupt and exception mechanisms used in real-address, virtual-8086 mode, and 64-bit mode.

Chapter 21, "8086 Emulation," describes information specific to interrupt and exception mechanisms in real-address and virtual-8086 mode. Section 6.14, "Exception and Interrupt Handling in 64-bit Mode," describes information specific to interrupt and exception mechanisms in IA-32e mode and 64-bit sub-mode.

6.1 INTERRUPT AND EXCEPTION OVERVIEW

Interrupts and exceptions are events that indicate that a condition exists somewhere in the system, the processor, or within the currently executing program or task that requires the attention of a processor. They typically result in a forced transfer of execution from the currently running program or task to a special software routine or task called an interrupt handler or an exception handler. The action taken by a processor in response to an interrupt or exception is referred to as servicing or handling the interrupt or exception.

Interrupts occur at random times during the execution of a program, in response to signals from hardware. System hardware uses interrupts to handle events external to the processor, such as requests to service peripheral devices. Software can also generate interrupts by executing the INT *n* instruction.

Exceptions occur when the processor detects an error condition while executing an instruction, such as division by zero. The processor detects a variety of error conditions including protection violations, page faults, and internal machine faults. The machine-check architecture of the Pentium 4, Intel Xeon, P6 family, and Pentium processors also permits a machine-check exception to be generated when internal hardware errors and bus errors are detected.

When an interrupt is received or an exception is detected, the currently running procedure or task is suspended while the processor executes an interrupt or exception handler. When execution of the handler is complete, the processor resumes execution of the interrupted procedure or task. The resumption of the interrupted procedure or task happens without loss of program continuity, unless recovery from an exception was not possible or an interrupt caused the currently running program to be terminated.

This chapter describes the processor's interrupt and exception-handling mechanism, when operating in protected mode. A description of the exceptions and the conditions that cause them to be generated is given at the end of this chapter.

6.2 EXCEPTION AND INTERRUPT VECTORS

To aid in handling exceptions and interrupts, each architecturally defined exception and each interrupt condition requiring special handling by the processor is assigned a unique identification number, called a vector number. The processor uses the vector number assigned to an exception or interrupt as an index into the interrupt descriptor table (IDT). The table provides the entry point to an exception or interrupt handler (see Section 6.10, "Interrupt Descriptor Table (IDT)").

The allowable range for vector numbers is 0 to 255. Vector numbers in the range 0 through 31 are reserved by the Intel 64 and IA-32 architectures for architecture-defined exceptions and interrupts. Not all of the vector numbers in this range have a currently defined function. The unassigned vector numbers in this range are reserved. Do not use the reserved vector numbers.

Vector numbers in the range 32 to 255 are designated as user-defined interrupts and are not reserved by the Intel 64 and IA-32 architecture. These interrupts are generally assigned to external I/O devices to enable those devices to send interrupts to the processor through one of the external hardware interrupt mechanisms (see Section 6.3, "Sources of Interrupts").

Table 6-1 shows vector number assignments for architecturally defined exceptions and for the NMI interrupt. This table gives the exception type (see Section 6.5, "Exception Classifications") and indicates whether an error code is saved on the stack for the exception. The source of each predefined exception and the NMI interrupt is also given.

6.3 SOURCES OF INTERRUPTS

The processor receives interrupts from two sources:

- External (hardware generated) interrupts.
- Software-generated interrupts.

6.3.1 External Interrupts

External interrupts are received through pins on the processor or through the local APIC. The primary interrupt pins on Pentium 4, Intel Xeon, P6 family, and Pentium processors are the LINT[1:0] pins, which are connected to the local APIC (see Chapter 11, "Advanced Programmable Interrupt Controller (APIC)"). When the local APIC is enabled, the LINT[1:0] pins can be programmed through the APIC's local vector table (LVT) to be associated with any of the processor's exception or interrupt vectors.

When the local APIC is global/hardware disabled, these pins are configured as INTR and NMI pins, respectively. Asserting the INTR pin signals the processor that an external interrupt has occurred. The processor reads from the system bus the interrupt vector number provided by an external interrupt controller, such as an 8259A (see Section 6.2, "Exception and Interrupt Vectors"). Asserting the NMI pin signals a non-maskable interrupt (NMI), which is assigned to interrupt vector 2.

Table 6-1. Protected-Mode Exceptions and Interrupts

Vector	Mnemonic	Description	Type	Error Code	Source
0	#DE	Divide Error	Fault	No	DIV and IDIV instructions.
1	#DB	Debug Exception	Fault/ Trap	No	Instruction, data, and I/O breakpoints; single-step; and others.
2	—	NMI Interrupt	Interrupt	No	Nonmaskable external interrupt.
3	#BP	Breakpoint	Trap	No	INT3 instruction.
4	#OF	Overflow	Trap	No	INTO instruction.
5	#BR	BOUND Range Exceeded	Fault	No	BOUND instruction.
6	#UD	Invalid Opcode (Undefined Opcode)	Fault	No	UD instruction or reserved opcode.
7	#NM	Device Not Available (No Math Coprocessor)	Fault	No	Floating-point or WAIT/FWAIT instruction.
8	#DF	Double Fault	Abort	Yes (zero)	Any instruction that can generate an exception, an NMI, or an INTR.
9		Coprocessor Segment Overrun (reserved)	Fault	No	Floating-point instruction.[1]
10	#TS	Invalid TSS	Fault	Yes	Task switch or TSS access.
11	#NP	Segment Not Present	Fault	Yes	Loading segment registers or accessing system segments.
12	#SS	Stack-Segment Fault	Fault	Yes	Stack operations and SS register loads.
13	#GP	General Protection	Fault	Yes	Any memory reference and other protection checks.
14	#PF	Page Fault	Fault	Yes	Any memory reference.

Table 6-1. Protected-Mode Exceptions and Interrupts (Contd.)

Vector	Mnemonic	Description	Type	Error Code	Source
15	—	(Intel reserved. Do not use.)		No	
16	#MF	x87 FPU Floating-Point Error (Math Fault)	Fault	No	x87 FPU floating-point or WAIT/FWAIT instruction.
17	#AC	Alignment Check	Fault	Yes (Zero)	Any data reference in memory.[2]
18	#MC	Machine Check	Abort	No	Error codes (if any) and source are model dependent.[3]
19	#XM	SIMD Floating-Point Exception	Fault	No	SSE/SSE2/SSE3 floating-point instructions[4]
20	#VE	Virtualization Exception	Fault	No	EPT violations[5]
21	#CP	Control Protection Exception	Fault	Yes	RET, IRET, RSTORSSP, and SETSSBSY instructions can generate this exception. When CET indirect branch tracking is enabled, this exception can be generated due to a missing ENDBRANCH instruction at target of an indirect call or jump.
22-31	—	Intel reserved. Do not use.			
32-255	—	User Defined (Non-reserved) Interrupts	Interrupt		External interrupt or INT *n* instruction.

NOTES:

1. Processors after the Intel386 processor do not generate this exception.
2. This exception was introduced in the Intel486 processor.
3. This exception was introduced in the Pentium processor and enhanced in the P6 family processors.
4. This exception was introduced in the Pentium III processor.
5. This exception can occur only on processors that support the 1-setting of the "EPT-violation #VE" VM-execution control.

The processor's local APIC is normally connected to a system-based I/O APIC. Here, external interrupts received at the I/O APIC's pins can be directed to the local APIC through the system bus (Pentium 4, Intel Core Duo, Intel Core 2, Intel Atom, and Intel Xeon processors) or the APIC serial bus (P6 family and Pentium processors). The I/O APIC determines the vector number of the interrupt and sends this number to the local APIC. When a system contains multiple processors, processors can also send interrupts to one another by means of the system bus (Pentium 4, Intel Core Duo, Intel Core 2, Intel Atom, and Intel Xeon processors) or the APIC serial bus (P6 family and Pentium processors).

The LINT[1:0] pins are not available on the Intel486 processor and earlier Pentium processors that do not contain an on-chip local APIC. These processors have dedicated NMI and INTR pins. With these processors, external interrupts are typically generated by a system-based interrupt controller (8259A), with the interrupts being signaled through the INTR pin.

Note that several other pins on the processor can cause a processor interrupt to occur. However, these interrupts are not handled by the interrupt and exception mechanism described in this chapter. These pins include the RESET#, FLUSH#, STPCLK#, SMI#, R/S#, and INIT# pins. Whether they are included on a particular processor is implementation dependent. Pin functions are described in the data books for the individual processors. The SMI# pin is described in Chapter 32, "System Management Mode."

6.3.2 Maskable Hardware Interrupts

Any external interrupt that is delivered to the processor by means of the INTR pin or through the local APIC is called a maskable hardware interrupt. Maskable hardware interrupts that can be delivered through the INTR pin include

all IA-32 architecture defined interrupt vectors from 0 through 255; those that can be delivered through the local APIC include interrupt vectors 16 through 255.

The IF flag in the EFLAGS register permits all maskable hardware interrupts to be masked as a group (see Section 6.8.1, "Masking Maskable Hardware Interrupts"). Note that when interrupts 0 through 15 are delivered through the local APIC, the APIC indicates the receipt of an illegal vector.

6.3.3 Software-Generated Interrupts

The INT *n* instruction permits interrupts to be generated from within software by supplying an interrupt vector number as an operand. For example, the INT 35 instruction forces an implicit call to the interrupt handler for interrupt 35.

Any of the interrupt vectors from 0 to 255 can be used as a parameter in this instruction. If the processor's predefined NMI vector is used, however, the response of the processor will not be the same as it would be from an NMI interrupt generated in the normal manner. If vector number 2 (the NMI vector) is used in this instruction, the NMI interrupt handler is called, but the processor's NMI-handling hardware is not activated.

Interrupts generated in software with the INT *n* instruction cannot be masked by the IF flag in the EFLAGS register.

6.4 SOURCES OF EXCEPTIONS

The processor receives exceptions from three sources:

- Processor-detected program-error exceptions.
- Software-generated exceptions.
- Machine-check exceptions.

6.4.1 Program-Error Exceptions

The processor generates one or more exceptions when it detects program errors during the execution in an application program or the operating system or executive. Intel 64 and IA-32 architectures define a vector number for each processor-detectable exception. Exceptions are classified as **faults**, **traps**, and **aborts** (see Section 6.5, "Exception Classifications").

6.4.2 Software-Generated Exceptions

The INTO, INT1, INT3, and BOUND instructions permit exceptions to be generated in software. These instructions allow checks for exception conditions to be performed at points in the instruction stream. For example, INT3 causes a breakpoint exception to be generated.

The INT *n* instruction can be used to emulate exceptions in software; but there is a limitation.[1] If INT *n* provides a vector for one of the architecturally-defined exceptions, the processor generates an interrupt to the correct vector (to access the exception handler) but does not push an error code on the stack. This is true even if the associated hardware-generated exception normally produces an error code. The exception handler will still attempt to pop an error code from the stack while handling the exception. Because no error code was pushed, the handler will pop off and discard the EIP instead (in place of the missing error code). This sends the return to the wrong location.

6.4.3 Machine-Check Exceptions

The P6 family and Pentium processors provide both internal and external machine-check mechanisms for checking the operation of the internal chip hardware and bus transactions. These mechanisms are implementation depen-

1. The INT *n* instruction has opcode CD following by an immediate byte encoding the value of *n*. In contrast, INT1 has opcode F1 and INT3 has opcode CC.

dent. When a machine-check error is detected, the processor signals a machine-check exception (vector 18) and returns an error code.

See Chapter 6, "Interrupt 18—Machine-Check Exception (#MC)" and Chapter 16, "Machine-Check Architecture," for more information about the machine-check mechanism.

6.5 EXCEPTION CLASSIFICATIONS

Exceptions are classified as **faults**, **traps**, or **aborts** depending on the way they are reported and whether the instruction that caused the exception can be restarted without loss of program or task continuity.

- **Faults** — A fault is an exception that can generally be corrected and that, once corrected, allows the program to be restarted with no loss of continuity. When a fault is reported, the processor restores the machine state to the state prior to the beginning of execution of the faulting instruction. The return address (saved contents of the CS and EIP registers) for the fault handler points to the faulting instruction, rather than to the instruction following the faulting instruction.
- **Traps** — A trap is an exception that is reported immediately following the execution of the trapping instruction. Traps allow execution of a program or task to be continued without loss of program continuity. The return address for the trap handler points to the instruction to be executed after the trapping instruction.
- **Aborts** — An abort is an exception that does not always report the precise location of the instruction causing the exception and does not allow a restart of the program or task that caused the exception. Aborts are used to report severe errors, such as hardware errors and inconsistent or illegal values in system tables.

NOTE

One exception subset normally reported as a fault is not restartable. Such exceptions result in loss of some processor state. For example, executing a POPAD instruction where the stack frame crosses over the end of the stack segment causes a fault to be reported. In this situation, the exception handler sees that the instruction pointer (CS:EIP) has been restored as if the POPAD instruction had not been executed. However, internal processor state (the general-purpose registers) will have been modified. Such cases are considered programming errors. An application causing this class of exceptions should be terminated by the operating system.

6.6 PROGRAM OR TASK RESTART

To allow the restarting of program or task following the handling of an exception or an interrupt, all exceptions (except aborts) are guaranteed to report exceptions on an instruction boundary. All interrupts are guaranteed to be taken on an instruction boundary.

For fault-class exceptions, the return instruction pointer (saved when the processor generates an exception) points to the faulting instruction. So, when a program or task is restarted following the handling of a fault, the faulting instruction is restarted (re-executed). Restarting the faulting instruction is commonly used to handle exceptions that are generated when access to an operand is blocked. The most common example of this type of fault is a page-fault exception (#PF) that occurs when a program or task references an operand located on a page that is not in memory. When a page-fault exception occurs, the exception handler can load the page into memory and resume execution of the program or task by restarting the faulting instruction. To ensure that the restart is handled transparently to the currently executing program or task, the processor saves the necessary registers and stack pointers to allow a restart to the state prior to the execution of the faulting instruction.

For trap-class exceptions, the return instruction pointer points to the instruction following the trapping instruction. If a trap is detected during an instruction which transfers execution, the return instruction pointer reflects the transfer. For example, if a trap is detected while executing a JMP instruction, the return instruction pointer points to the destination of the JMP instruction, not to the next address past the JMP instruction. All trap exceptions allow program or task restart with no loss of continuity. For example, the overflow exception is a trap exception. Here, the return instruction pointer points to the instruction following the INTO instruction that tested EFLAGS.OF (overflow) flag. The trap handler for this exception resolves the overflow condition. Upon return from the trap handler, program or task execution continues at the instruction following the INTO instruction.

The abort-class exceptions do not support reliable restarting of the program or task. Abort handlers are designed to collect diagnostic information about the state of the processor when the abort exception occurred and then shut down the application and system as gracefully as possible.

Interrupts rigorously support restarting of interrupted programs and tasks without loss of continuity. The return instruction pointer saved for an interrupt points to the next instruction to be executed at the instruction boundary where the processor took the interrupt. If the instruction just executed has a repeat prefix, the interrupt is taken at the end of the current iteration with the registers set to execute the next iteration.

The ability of a P6 family processor to speculatively execute instructions does not affect the taking of interrupts by the processor. Interrupts are taken at instruction boundaries located during the retirement phase of instruction execution; so they are always taken in the "in-order" instruction stream. See Chapter 2, "Intel® 64 and IA-32 Architectures," in the *Intel® 64 and IA-32 Architectures Software Developer's Manual, Volume 1*, for more information about the P6 family processors' microarchitecture and its support for out-of-order instruction execution.

Note that the Pentium processor and earlier IA-32 processors also perform varying amounts of prefetching and preliminary decoding. With these processors as well, exceptions and interrupts are not signaled until actual "in-order" execution of the instructions. For a given code sample, the signaling of exceptions occurs uniformly when the code is executed on any family of IA-32 processors (except where new exceptions or new opcodes have been defined).

6.7 NONMASKABLE INTERRUPT (NMI)

The nonmaskable interrupt (NMI) can be generated in either of two ways:

- External hardware asserts the NMI pin.
- The processor receives a message on the system bus (Pentium 4, Intel Core Duo, Intel Core 2, Intel Atom, and Intel Xeon processors) or the APIC serial bus (P6 family and Pentium processors) with a delivery mode NMI.

When the processor receives a NMI from either of these sources, the processor handles it immediately by calling the NMI handler pointed to by interrupt vector number 2. The processor also invokes certain hardware conditions to ensure that no other interrupts, including NMI interrupts, are received until the NMI handler has completed executing (see Section 6.7.1, "Handling Multiple NMIs").

Also, when an NMI is received from either of the above sources, it cannot be masked by the IF flag in the EFLAGS register.

It is possible to issue a maskable hardware interrupt (through the INTR pin) to vector 2 to invoke the NMI interrupt handler; however, this interrupt will not truly be an NMI interrupt. A true NMI interrupt that activates the processor's NMI-handling hardware can only be delivered through one of the mechanisms listed above.

6.7.1 Handling Multiple NMIs

While an NMI interrupt handler is executing, the processor blocks delivery of subsequent NMIs until the next execution of the IRET instruction. This blocking of NMIs prevents nested execution of the NMI handler. It is recommended that the NMI interrupt handler be accessed through an interrupt gate to disable maskable hardware interrupts (see Section 6.8.1, "Masking Maskable Hardware Interrupts").

An execution of the IRET instruction unblocks NMIs even if the instruction causes a fault. For example, if the IRET instruction executes with EFLAGS.VM = 1 and IOPL of less than 3, a general-protection exception is generated (see Section 21.2.7, "Sensitive Instructions"). In such a case, NMIs are unmasked before the exception handler is invoked.

6.8 ENABLING AND DISABLING INTERRUPTS

The processor inhibits the generation of some interrupts, depending on the state of the processor and of the IF and RF flags in the EFLAGS register, as described in the following sections.

6.8.1 Masking Maskable Hardware Interrupts

The IF flag can disable the servicing of maskable hardware interrupts received on the processor's INTR pin or through the local APIC (see Section 6.3.2, "Maskable Hardware Interrupts"). When the IF flag is clear, the processor inhibits interrupts delivered to the INTR pin or through the local APIC from generating an internal interrupt request; when the IF flag is set, interrupts delivered to the INTR or through the local APIC pin are processed as normal external interrupts.

The IF flag does not affect non-maskable interrupts (NMIs) delivered to the NMI pin or delivery mode NMI messages delivered through the local APIC, nor does it affect processor generated exceptions. As with the other flags in the EFLAGS register, the processor clears the IF flag in response to a hardware reset.

The fact that the group of maskable hardware interrupts includes the reserved interrupt and exception vectors 0 through 32 can potentially cause confusion. Architecturally, when the IF flag is set, an interrupt for any of the vectors from 0 through 32 can be delivered to the processor through the INTR pin and any of the vectors from 16 through 32 can be delivered through the local APIC. The processor will then generate an interrupt and call the interrupt or exception handler pointed to by the vector number. So for example, it is possible to invoke the page-fault handler through the INTR pin (by means of vector 14); however, this is not a true page-fault exception. It is an interrupt. As with the INT *n* instruction (see Section 6.4.2, "Software-Generated Exceptions"), when an interrupt is generated through the INTR pin to an exception vector, the processor does not push an error code on the stack, so the exception handler may not operate correctly.

The IF flag can be set or cleared with the STI (set interrupt-enable flag) and CLI (clear interrupt-enable flag) instructions, respectively. These instructions may be executed only if the CPL is equal to or less than the IOPL. A general-protection exception (#GP) is generated if they are executed when the CPL is greater than the IOPL.[1] If IF = 0, maskable hardware interrupts remain inhibited on the instruction boundary following an execution of STI.[2] The inhibition ends after delivery of another event (e.g., exception) or the execution of the next instruction.

The IF flag is also affected by the following operations:

- The PUSHF instruction stores all flags on the stack, where they can be examined and modified. The POPF instruction can be used to load the modified flags back into the EFLAGS register.
- Task switches and the POPF and IRET instructions load the EFLAGS register; therefore, they can be used to modify the setting of the IF flag.
- When an interrupt is handled through an interrupt gate, the IF flag is automatically cleared, which disables maskable hardware interrupts. (If an interrupt is handled through a trap gate, the IF flag is not cleared.)

See the descriptions of the CLI, STI, PUSHF, POPF, and IRET instructions in Chapter 3, "Instruction Set Reference, A-L," in the *Intel® 64 and IA-32 Architectures Software Developer's Manual, Volume 2A*, and Chapter 4, "Instruction Set Reference, M-U," in the *Intel® 64 and IA-32 Architectures Software Developer's Manual, Volume 2B*, for a detailed description of the operations these instructions are allowed to perform on the IF flag.

6.8.2 Masking Instruction Breakpoints

The RF (resume) flag in the EFLAGS register controls the response of the processor to instruction-breakpoint conditions (see the description of the RF flag in Section 2.3, "System Flags and Fields in the EFLAGS Register").

When set, it prevents an instruction breakpoint from generating a debug exception (#DB); when clear, instruction breakpoints will generate debug exceptions. The primary function of the RF flag is to prevent the processor from going into a debug exception loop on an instruction-breakpoint. See Section 18.3.1.1, "Instruction-Breakpoint Exception Condition," for more information on the use of this flag.

As noted in Section 6.8.3, execution of the MOV or POP instruction to load the SS register suppresses any instruction breakpoint on the next instruction (just as if EFLAGS.RF were 1).

---

1. The effect of the IOPL on these instructions is modified slightly when the virtual mode extension is enabled by setting the VME flag in control register CR4: see Section 21.3, "Interrupt and Exception Handling in Virtual-8086 Mode." Behavior is also impacted by the PVI flag: see Section 21.4, "Protected-Mode Virtual Interrupts."
2. Nonmaskable interrupts and system-management interrupts may also be inhibited on the instruction boundary following such an execution of STI.

6.8.3 Masking Exceptions and Interrupts When Switching Stacks

To switch to a different stack segment, software often uses a pair of instructions, for example:

```
MOV SS, AX
MOV ESP, StackTop
```

(Software might also use the POP instruction to load SS and ESP.)

If an interrupt or exception occurs after the new SS segment descriptor has been loaded but before the ESP register has been loaded, these two parts of the logical address into the stack space are inconsistent for the duration of the interrupt or exception handler (assuming that delivery of the interrupt or exception does not itself load a new stack pointer).

To account for this situation, the processor prevents certain events from being delivered after execution of a MOV to SS instruction or a POP to SS instruction. The following items provide details:

- Any instruction breakpoint on the next instruction is suppressed (as if EFLAGS.RF were 1).
- Any data breakpoint on the MOV to SS instruction or POP to SS instruction is inhibited until the instruction boundary following the next instruction.
- Any single-step trap that would be delivered following the MOV to SS instruction or POP to SS instruction (because EFLAGS.TF is 1) is suppressed.
- The suppression and inhibition ends after delivery of an exception or the execution of the next instruction.
- If a sequence of consecutive instructions each loads the SS register (using MOV or POP), only the first is guaranteed to inhibit or suppress events in this way.

Intel recommends that software use the LSS instruction to load the SS register and ESP together. The problem identified earlier does not apply to LSS, and the LSS instruction does not inhibit events as detailed above.

6.9 PRIORITIZATION OF CONCURRENT EVENTS

If more than one event is pending at an instruction boundary (between execution of instructions), the processor services them in a predictable order. Table 6-2 shows the priority among classes of event sources.

Table 6-2. Priority Among Concurrent Events

Priority	Description
1 (Highest)	Hardware Reset and Machine Checks - RESET - Machine Check (#MC)
2	Trap on Task Switch - T flag in TSS is set (#DB)
3	External Hardware Interventions - FLUSH - STOPCLK - SMI - INIT
4	Traps on the Previous Instruction - Trap-class Debug Exceptions (#DB due to TF flag set or data/I-O breakpoint)
5	Nonmaskable Interrupts (NMI) [1]
6	Maskable Hardware Interrupts [1]
7	Fault-class Debug Exceptions (#DB due to instruction breakpoint)

Table 6-2. Priority Among Concurrent Events (Contd.)

Priority	Description
8	Faults from Fetching Next Instruction - Code-Segment Limit Violation (#GP) - Code Page Fault (#PF)
9 (Lowest)	Faults from Decoding the Next Instruction - Control protection exception due to missing ENDBRANCH at target of an indirect call or jump (#CP) - Instruction length > 15 bytes (#GP) - Invalid Opcode (#UD) - Coprocessor Not Available (#NM)

NOTE

1. The Intel® 486 processor and earlier processors group nonmaskable and maskable interrupts in the same priority class.

The processor first services a pending event from the class which has the highest priority, transferring execution to the first instruction of the handler. Lower priority exceptions are discarded; lower priority interrupts are held pending. Discarded exceptions may be re-generated when the event handler returns execution to the point in the program or task where the original event occurred. While the priority among the classes listed in Table 6-2 is consistent across processor implementations, the priority of events within a class is implementation-dependent and may vary from processor to processor.

Table 6-2 specifies the prioritization of events that may be pending at an instruction boundary. It does not specify the prioritization of faults that arise during instruction execution or event delivery (these include #BR, #TS, #NP, #SS, #GP, #PF, #AC, #MF, #XM, #VE, or #CP). It also does not apply to the events generated by the "Call to Interrupt Procedure" instructions (INT n, INTO, INT3, and INT1), as these events are integral to the execution of those instructions and do not occur between instructions.

6.10 INTERRUPT DESCRIPTOR TABLE (IDT)

The interrupt descriptor table (IDT) associates each exception or interrupt vector with a gate descriptor for the procedure or task used to service the associated exception or interrupt. Like the GDT and LDTs, the IDT is an array of 8-byte descriptors (in protected mode). Unlike the GDT, the first entry of the IDT may contain a descriptor. To form an index into the IDT, the processor scales the exception or interrupt vector by eight (the number of bytes in a gate descriptor). Because there are only 256 interrupt or exception vectors, the IDT need not contain more than 256 descriptors. It can contain fewer than 256 descriptors, because descriptors are required only for the interrupt and exception vectors that may occur. All empty descriptor slots in the IDT should have the present flag for the descriptor set to 0.

The base addresses of the IDT should be aligned on an 8-byte boundary to maximize performance of cache line fills. The limit value is expressed in bytes and is added to the base address to get the address of the last valid byte. A limit value of 0 results in exactly 1 valid byte. Because IDT entries are always eight bytes long, the limit should always be one less than an integral multiple of eight (that is, 8N – 1).

The IDT may reside anywhere in the linear address space. As shown in Figure 6-1, the processor locates the IDT using the IDTR register. This register holds both a 32-bit base address and 16-bit limit for the IDT.

The LIDT (load IDT register) and SIDT (store IDT register) instructions load and store the contents of the IDTR register, respectively. The LIDT instruction loads the IDTR register with the base address and limit held in a memory operand. This instruction can be executed only when the CPL is 0. It normally is used by the initialization code of an operating system when creating an IDT. An operating system also may use it to change from one IDT to another. The SIDT instruction copies the base and limit value stored in IDTR to memory. This instruction can be executed at any privilege level.

If a vector references a descriptor beyond the limit of the IDT, a general-protection exception (#GP) is generated.

NOTE

Because interrupts are delivered to the processor core only once, an incorrectly configured IDT could result in incomplete interrupt handling and/or the blocking of interrupt delivery.

IA-32 architecture rules need to be followed for setting up IDTR base/limit/access fields and each field in the gate descriptors. The same apply for the Intel 64 architecture. This includes implicit referencing of the destination code segment through the GDT or LDT and accessing the stack.

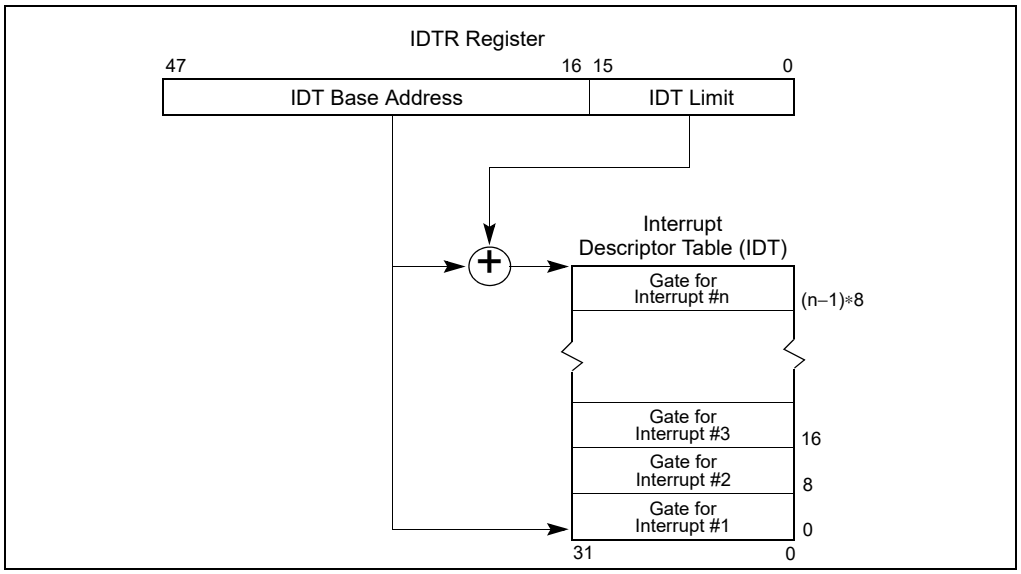

Figure 6-1. Relationship of the IDTR and IDT

6.11 IDT DESCRIPTORS

The IDT may contain any of three kinds of gate descriptors:

- Task-gate descriptor
- Interrupt-gate descriptor
- Trap-gate descriptor

Figure 6-2 shows the formats for the task-gate, interrupt-gate, and trap-gate descriptors. The format of a task gate used in an IDT is the same as that of a task gate used in the GDT or an LDT (see Section 8.2.5, “Task-Gate Descriptor”). The task gate contains the segment selector for a TSS for an exception and/or interrupt handler task.

Interrupt and trap gates are very similar to call gates (see Section 5.8.3, “Call Gates”). They contain a far pointer (segment selector and offset) that the processor uses to transfer program execution to a handler procedure in an exception- or interrupt-handler code segment. These gates differ in the way the processor handles the IF flag in the EFLAGS register (see Section 6.12.1.3, “Flag Usage By Exception- or Interrupt-Handler Procedure”).

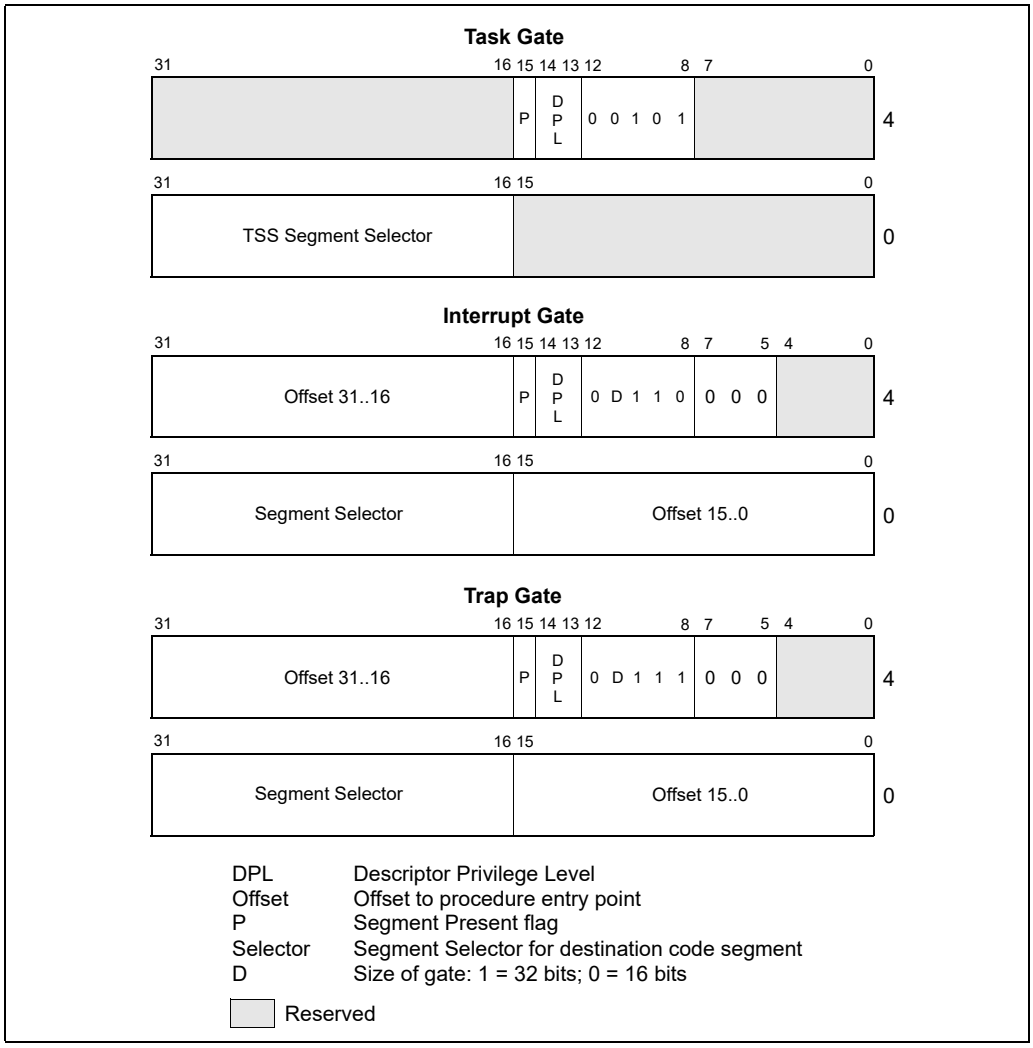

Figure 6-2. IDT Gate Descriptors

6.12 EXCEPTION AND INTERRUPT HANDLING

The processor handles calls to exception- and interrupt-handlers similar to the way it handles calls with a CALL instruction to a procedure or a task. When responding to an exception or interrupt, the processor uses the exception or interrupt vector as an index to a descriptor in the IDT. If the index points to an interrupt gate or trap gate, the processor calls the exception or interrupt handler in a manner similar to a CALL to a call gate (see Section 5.8.2, “Gate Descriptors,” through Section 5.8.6, “Returning from a Called Procedure”). If index points to a task gate, the processor executes a task switch to the exception- or interrupt-handler task in a manner similar to a CALL to a task gate (see Section 8.3, “Task Switching”).

6.12.1 Exception- or Interrupt-Handler Procedures

An interrupt gate or trap gate references an exception- or interrupt-handler procedure that runs in the context of the currently executing task (see Figure 6-3). The segment selector for the gate points to a segment descriptor for an executable code segment in either the GDT or the current LDT. The offset field of the gate descriptor points to the beginning of the exception- or interrupt-handling procedure.

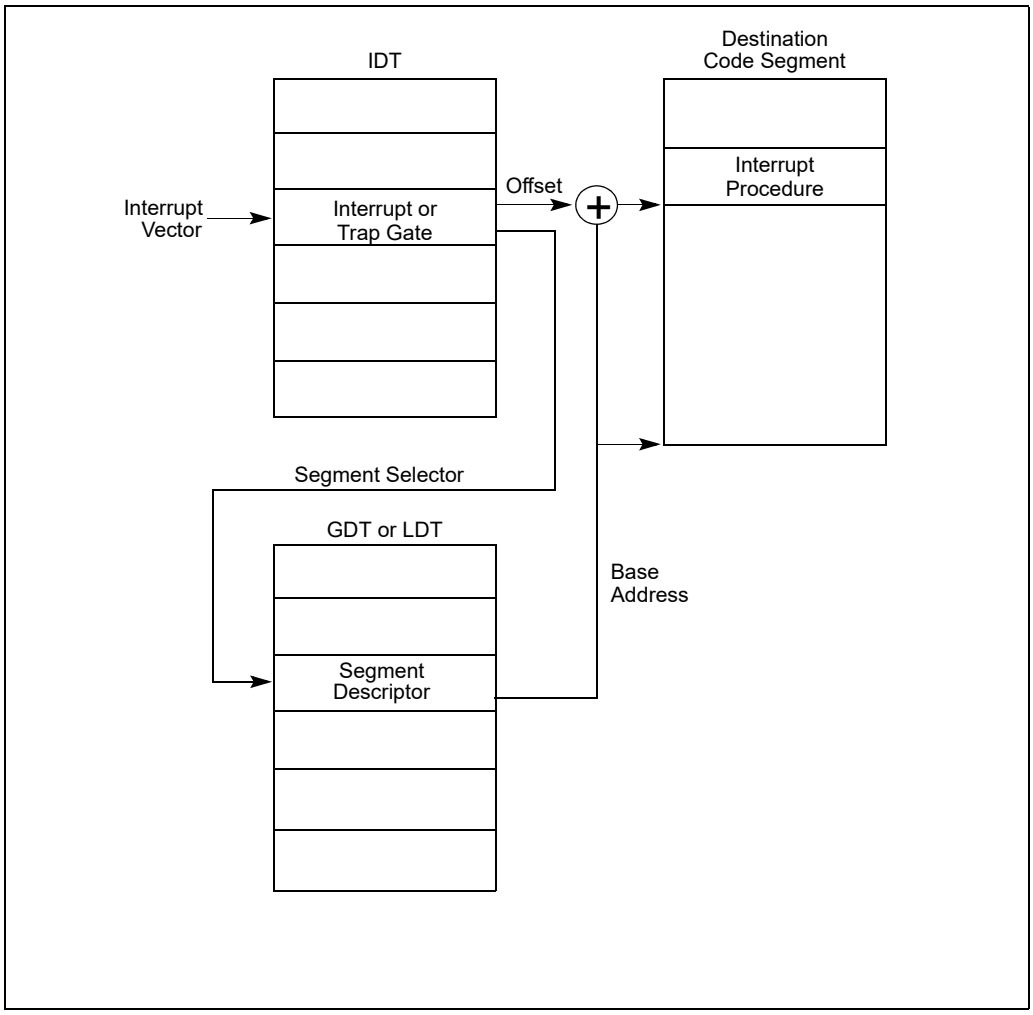

Figure 6-3. Interrupt Procedure Call

When the processor performs a call to the exception- or interrupt-handler procedure:

- If the handler procedure is going to be executed at a numerically lower privilege level, a stack switch occurs. When the stack switch occurs:
  a. The segment selector and stack pointer for the stack to be used by the handler are obtained from the TSS for the currently executing task. On this new stack, the processor pushes the stack segment selector and stack pointer of the interrupted procedure.
  b. The processor then saves the current state of the EFLAGS, CS, and EIP registers on the new stack (see Figure 6-4).
  c. If an exception causes an error code to be saved, it is pushed on the new stack after the EIP value.
- If the handler procedure is going to be executed at the same privilege level as the interrupted procedure:
  a. The processor saves the current state of the EFLAGS, CS, and EIP registers on the current stack (see Figure 6-4).
  b. If an exception causes an error code to be saved, it is pushed on the current stack after the EIP value.

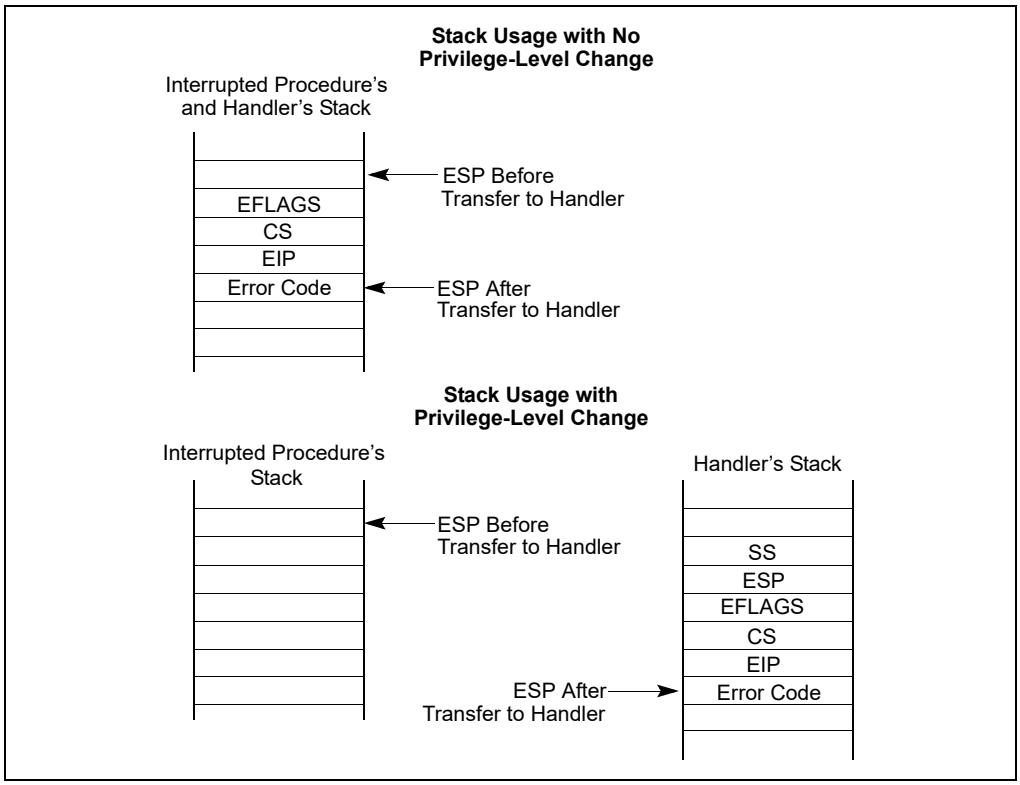

Figure 6-4. Stack Usage on Transfers to Interrupt and Exception-Handling Routines

To return from an exception- or interrupt-handler procedure, the handler must use the IRET (or IRETD) instruction. The IRET instruction is similar to the RET instruction except that it restores the saved flags into the EFLAGS register. The IOPL field of the EFLAGS register is restored only if the CPL is 0. The IF flag is changed only if the CPL is less than or equal to the IOPL. See Chapter 3, "Instruction Set Reference, A-L," of the *Intel® 64 and IA-32 Architectures Software Developer's Manual, Volume 2A*, for a description of the complete operation performed by the IRET instruction.

If a stack switch occurred when calling the handler procedure, the IRET instruction switches back to the interrupted procedure's stack on the return.

6.12.1.1 Shadow Stack Usage on Transfers to Interrupt and Exception Handling Routines

When the processor performs a call to the exception- or interrupt-handler procedure:

- If the handler procedure is going to be execute at a numerically lower privilege level, a shadow stack switch occurs. When the shadow stack switch occurs:
  a. On a transfer from privilege level 3, if shadow stacks are enabled at privilege level 3 then the SSP is saved to the IA32_PL3_SSP MSR.
  b. If shadow stacks are enabled at the privilege level where the handler will execute then the shadow stack for the handler is obtained from one of the following MSRs based on the privilege level at which the handler executes.
     - IA32_PL2_SSP if handler executes at privilege level 2.
     - IA32_PL1_SSP if handler executes at privilege level 1.
     - IA32_PL0_SSP if handler executes at privilege level 0.
  c. The SSP obtained is then verified to ensure it points to a valid supervisory shadow stack that is not currently active by verifying a supervisor shadow stack token at the address pointed to by the SSP. The operations performed to verify and acquire the supervisor shadow stack token by making it busy are as described in Section 17.2.3 of the *Intel® 64 and IA-32 Architectures Software Developer's Manual, Volume 1*.
  d. On this new shadow stack, the processor pushes the CS, LIP (CS.base + EIP), and SSP of the interrupted procedure if the interrupted procedure was executing at privilege level less than 3; see Figure 6-5.[1]
- If the handler procedure is going to be executed at the same privilege level as the interrupted procedure and shadow stacks are enabled at current privilege level:
  a. The processor saves the current state of the CS, LIP (CS.base + EIP), and SSP registers on the current shadow stack; see Figure 6-5.

1. If any of these pushes leads to an exception or a VM exit, the supervisor shadow-stack token remains busy.

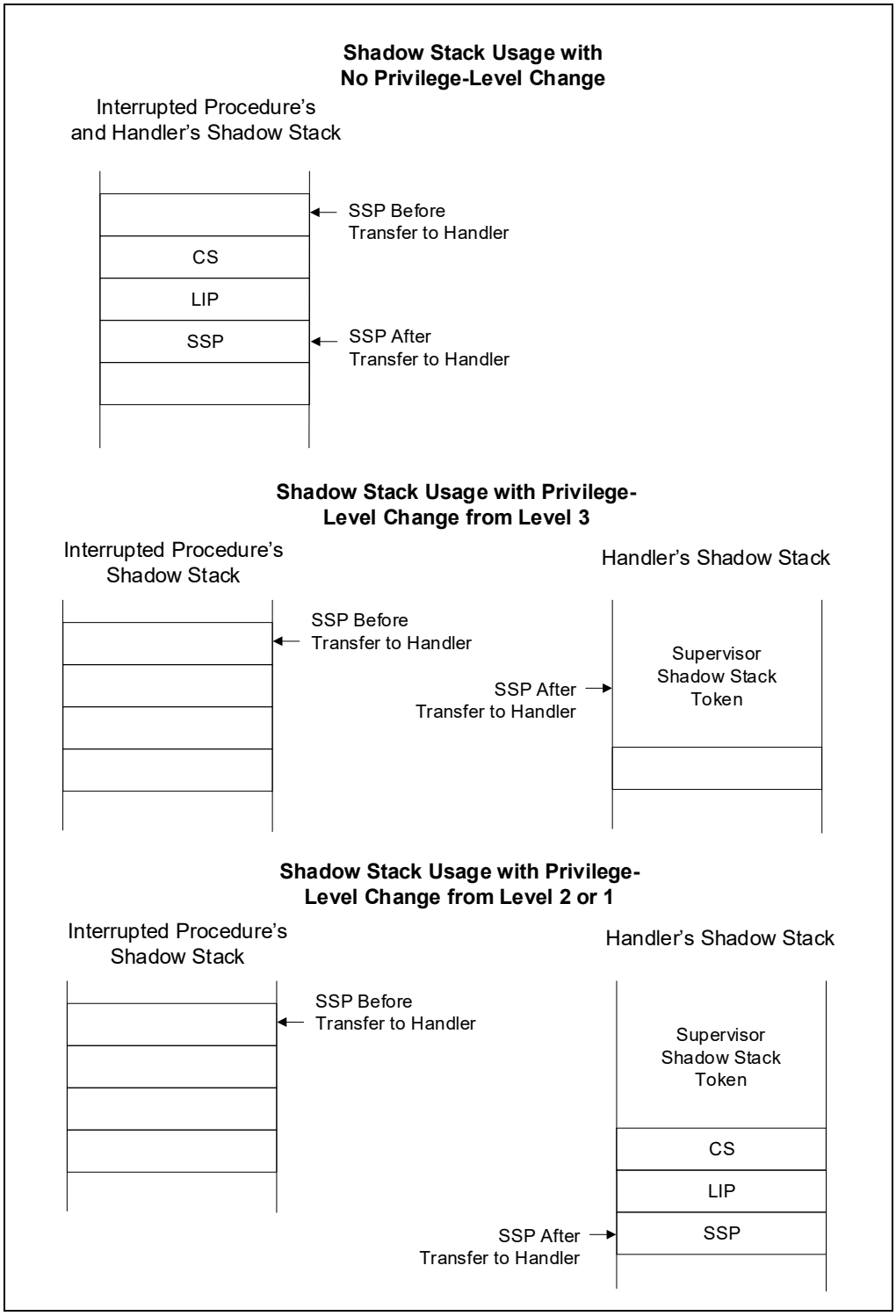

Figure 6-5. Shadow Stack Usage on Transfers to Interrupt and Exception-Handling Routines

To return from an exception- or interrupt-handler procedure, the handler must use the IRET (or IRETD) instruction.

When executing a return from an interrupt or exception handler from the same privilege level as the interrupted procedure, the processor performs these actions to enforce return address protection:

- Restores the CS and EIP registers to their values prior to the interrupt or exception.

If shadow stack is enabled:

— Compares the values on shadow stack at address SSP+8 (the LIP) and SSP+16 (the CS) to the CS and (CS.base + EIP) popped from the stack and causes a control protection exception (#CP(FAR-RET/IRET)) if they do not match.

— Pops the top-of-stack value (the SSP prior to the interrupt or exception) from shadow stack into SSP register.

When executing a return from an interrupt or exception handler from a different privilege level than the interrupted procedure, the processor performs the actions below.

- If shadow stack is enabled at current privilege level:
  - — If SSP is not aligned to 8 bytes then causes a control protection exception (#CP(FAR-RET/IRET)).
  - — If privilege level of the procedure being returned to is less than 3 (returning to supervisor mode):
    - Compares the values on shadow stack at address SSP+8 (the LIP) and SSP+16 (the CS) to the CS and (CS.base + EIP) popped from the stack and causes a control protection exception (#CP(FAR-RET/IRET)) if they do not match.
    - Temporarily saves the top-of-stack value (the SSP of the procedure being returned to) internally.
  - — If a busy supervisor shadow stack token is present at address SSP+24, then marks the token free using operations described in section Section 17.2.3 of the *Intel® 64 and IA-32 Architectures Software Developer's Manual, Volume 1*.
  - — If the privilege level of the procedure being returned to is less than 3 (returning to supervisor mode), restores the SSP register from the internally saved value.
  - — If the privilege level of the procedure being returned to is 3 (returning to user mode) and shadow stack is enabled at privilege level 3, then restores the SSP register with value of IA32_PL3_SSP MSR.

6.12.1.2 Protection of Exception- and Interrupt-Handler Procedures

The privilege-level protection for exception- and interrupt-handler procedures is similar to that used for ordinary procedure calls when called through a call gate (see Section 5.8.4, "Accessing a Code Segment Through a Call Gate"). The processor does not permit transfer of execution to an exception- or interrupt-handler procedure in a less privileged code segment (numerically greater privilege level) than the CPL.

An attempt to violate this rule results in a general-protection exception (#GP). The protection mechanism for exception- and interrupt-handler procedures is different in the following ways:

- Because interrupt and exception vectors have no RPL, the RPL is not checked on implicit calls to exception and interrupt handlers.
- The processor checks the DPL of the interrupt or trap gate only if an exception or interrupt is generated with an INT *n*, INT3, or INTO instruction.[1] Here, the CPL must be less than or equal to the DPL of the gate. This restriction prevents application programs or procedures running at privilege level 3 from using a software interrupt to access critical exception handlers, such as the page-fault handler, providing that those handlers are placed in more privileged code segments (numerically lower privilege level). For hardware-generated interrupts and processor-detected exceptions, the processor ignores the DPL of interrupt and trap gates.

Because exceptions and interrupts generally do not occur at predictable times, these privilege rules effectively impose restrictions on the privilege levels at which exception and interrupt- handling procedures can run. Either of the following techniques can be used to avoid privilege-level violations.

- The exception or interrupt handler can be placed in a conforming code segment. This technique can be used for handlers that only need to access data available on the stack (for example, divide error exceptions). If the handler needs data from a data segment, the data segment needs to be accessible from privilege level 3, which would make it unprotected.
- The handler can be placed in a nonconforming code segment with privilege level 0. This handler would always run, regardless of the CPL that the interrupted program or task is running at.

1. This check is not performed by execution of the INT1 instruction (opcode F1); it would be performed by execution of INT 1 (opcode CD 01).

6.12.1.3 Flag Usage By Exception- or Interrupt-Handler Procedure

When accessing an exception or interrupt handler through either an interrupt gate or a trap gate, the processor clears the TF flag in the EFLAGS register after it saves the contents of the EFLAGS register on the stack. (On calls to exception and interrupt handlers, the processor also clears the VM, RF, and NT flags in the EFLAGS register, after they are saved on the stack.) Clearing the TF flag prevents instruction tracing from affecting interrupt response and ensures that no single-step exception will be delivered after delivery to the handler. A subsequent IRET instruction restores the TF (and VM, RF, and NT) flags to the values in the saved contents of the EFLAGS register on the stack.

The only difference between an interrupt gate and a trap gate is the way the processor handles the IF flag in the EFLAGS register. When accessing an exception- or interrupt-handling procedure through an interrupt gate, the processor clears the IF flag to prevent other interrupts from interfering with the current interrupt handler. A subsequent IRET instruction restores the IF flag to its value in the saved contents of the EFLAGS register on the stack. Accessing a handler procedure through a trap gate does not affect the IF flag.

6.12.2 Interrupt Tasks

When an exception or interrupt handler is accessed through a task gate in the IDT, a task switch results. Handling an exception or interrupt with a separate task offers several advantages:

- The entire context of the interrupted program or task is saved automatically.
- A new TSS permits the handler to use a new privilege level 0 stack when handling the exception or interrupt. If an exception or interrupt occurs when the current privilege level 0 stack is corrupted, accessing the handler through a task gate can prevent a system crash by providing the handler with a new privilege level 0 stack.
- The handler can be further isolated from other tasks by giving it a separate address space. This is done by giving it a separate LDT.

The disadvantage of handling an interrupt with a separate task is that the amount of machine state that must be saved on a task switch makes it slower than using an interrupt gate, resulting in increased interrupt latency.

A task gate in the IDT references a TSS descriptor in the GDT (see Figure 6-6). A switch to the handler task is handled in the same manner as an ordinary task switch (see Section 8.3, “Task Switching”). The link back to the interrupted task is stored in the previous task link field of the handler task’s TSS. If an exception caused an error code to be generated, this error code is copied to the stack of the new task.

When exception- or interrupt-handler tasks are used in an operating system, there are actually two mechanisms that can be used to dispatch tasks: the software scheduler (part of the operating system) and the hardware scheduler (part of the processor's interrupt mechanism). The software scheduler needs to accommodate interrupt tasks that may be dispatched when interrupts are enabled.

NOTE

Because IA-32 architecture tasks are not re-entrant, an interrupt-handler task must disable interrupts between the time it completes handling the interrupt and the time it executes the IRET instruction. This action prevents another interrupt from occurring while the interrupt task's TSS is still marked busy, which would cause a general-protection (#GP) exception.

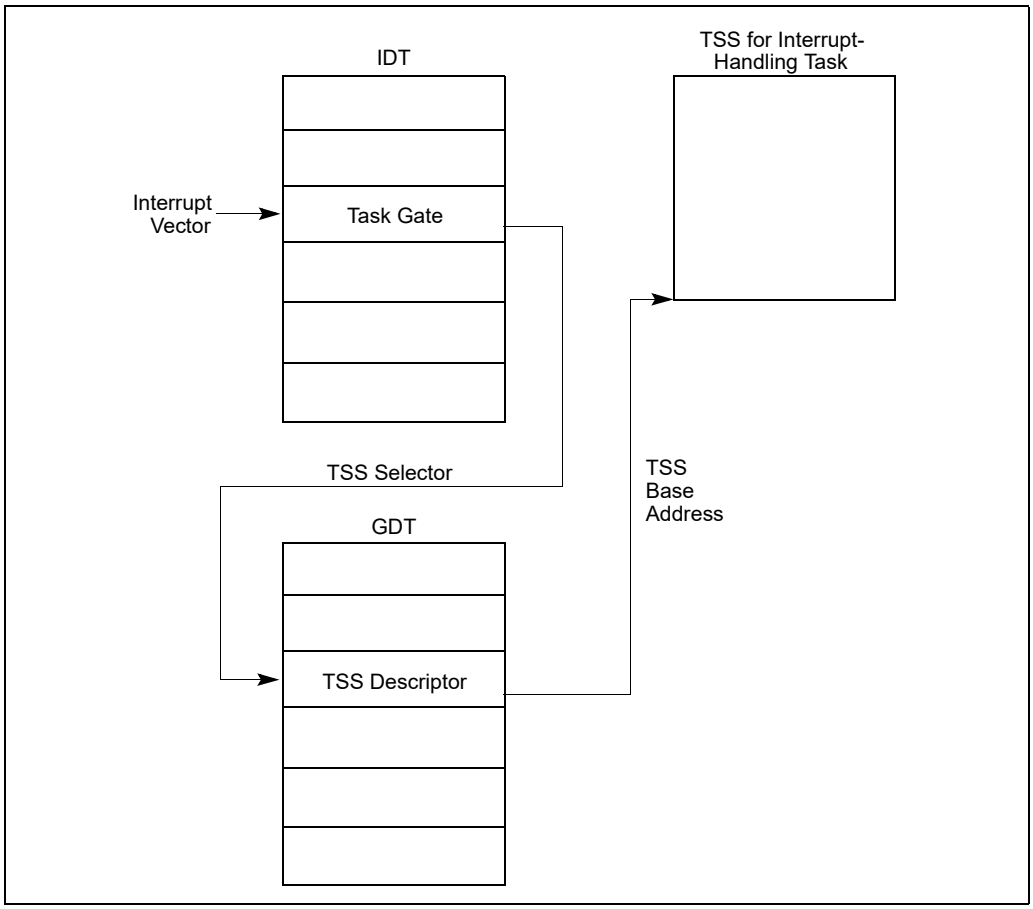

Figure 6-6. Interrupt Task Switch

6.13 ERROR CODE

When an exception condition is related to a specific segment selector or IDT vector, the processor pushes an error code onto the stack of the exception handler (whether it is a procedure or task). The error code has the format shown in Figure 6-7. The error code resembles a segment selector; however, instead of a TI flag and RPL field, the error code contains 3 flags:

EXT — **External event (bit 0)** — When set, indicates that the exception occurred during delivery of an event external to the program, such as an interrupt or an earlier exception.[1] The bit is cleared if the exception occurred during delivery of a software interrupt (INT *n*, INT3, or INTO).

IDT — **Descriptor location (bit 1)** — When set, indicates that the index portion of the error code refers to a gate descriptor in the IDT; when clear, indicates that the index refers to a descriptor in the GDT or the current LDT.

TI — **GDT/LDT (bit 2)** — Only used when the IDT flag is clear. When set, the TI flag indicates that the index portion of the error code refers to a segment or gate descriptor in the LDT; when clear, it indicates that the index refers to a descriptor in the current GDT.

1. The bit is also set if the exception occurred during delivery of INT1.

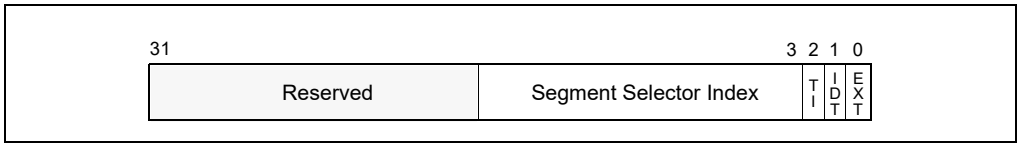

Figure 6-7. Error Code

The segment selector index field provides an index into the IDT, GDT, or current LDT to the segment or gate selector being referenced by the error code. In some cases the error code is null (all bits are clear except possibly EXT). A null error code indicates that the error was not caused by a reference to a specific segment or that a null segment selector was referenced in an operation.

The format of the error code is different for page-fault exceptions (#PF). See the "Interrupt 14—Page-Fault Exception (#PF)" section in this chapter.

The format of the error code is different for control protection exceptions (#CP). See the "Interrupt 21—Control Protection Exception (#CP)" section in this chapter.

The error code is pushed on the stack as a doubleword or word (depending on the default interrupt, trap, or task gate size). To keep the stack aligned for doubleword pushes, the upper half of the error code is reserved. Note that the error code is not popped when the IRET instruction is executed to return from an exception handler, so the handler must remove the error code before executing a return.

Error codes are not pushed on the stack for exceptions that are generated externally (with the INTR or LINT[1:0] pins) or the INT *n* instruction, even if an error code is normally produced for those exceptions.

6.14 EXCEPTION AND INTERRUPT HANDLING IN 64-BIT MODE

In 64-bit mode, interrupt and exception handling is similar to what has been described for non-64-bit modes. The following are the exceptions:

- All interrupt handlers pointed by the IDT are in 64-bit code (this does not apply to the SMI handler).
- The size of interrupt-stack pushes is fixed at 64 bits; and the processor uses 8-byte, zero extended stores.
- The stack pointer (SS:RSP) is pushed unconditionally on interrupts. In legacy modes, this push is conditional and based on a change in current privilege level (CPL).
- The new SS is set to NULL if there is a change in CPL.
- IRET behavior changes.
- There is a new interrupt stack-switch mechanism and a new interrupt shadow stack-switch mechanism.
- The alignment of interrupt stack frame is different.

6.14.1 64-Bit Mode IDT

Interrupt and trap gates are 16 bytes in length to provide a 64-bit offset for the instruction pointer (RIP). The 64-bit RIP referenced by interrupt-gate descriptors allows an interrupt service routine to be located anywhere in the linear-address space. See Figure 6-8.

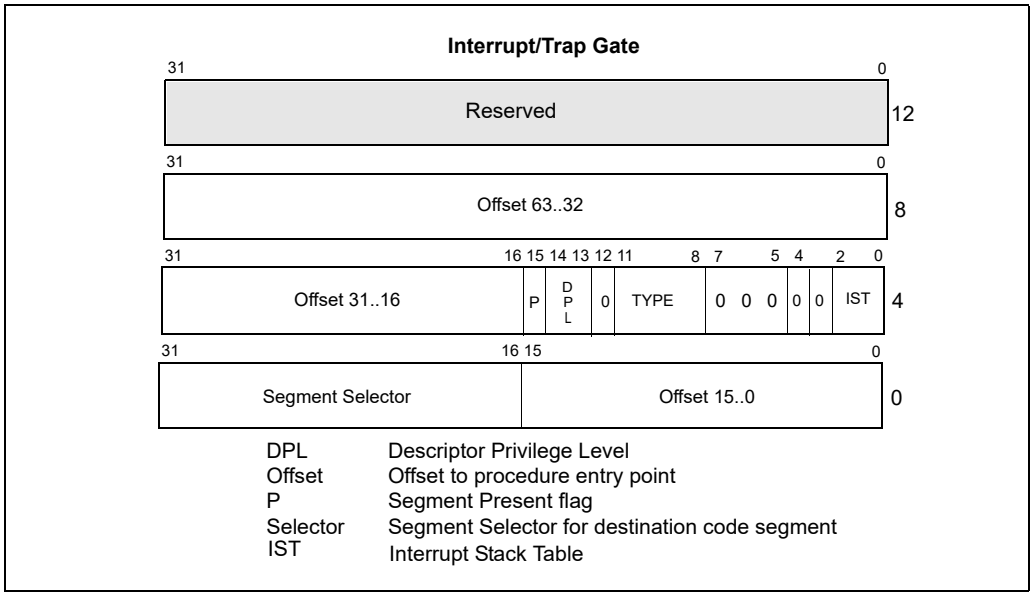

Figure 6-8. 64-Bit IDT Gate Descriptors

In 64-bit mode, the IDT index is formed by scaling the interrupt vector by 16. The first eight bytes (bytes 7:0) of a 64-bit mode interrupt gate are similar but not identical to legacy 32-bit interrupt gates. The type field (bits 11:8 in bytes 7:4) is described in Table 3-2. The Interrupt Stack Table (IST) field (bits 4:0 in bytes 7:4) is used by the stack switching mechanisms described in Section 6.14.5, "Interrupt Stack Table." Bytes 11:8 hold the upper 32 bits of the target RIP (interrupt segment offset) in canonical form. A general-protection exception (#GP) is generated if software attempts to reference an interrupt gate with a target RIP that is not in canonical form.

The target code segment referenced by the interrupt gate must be a 64-bit code segment (CS.L = 1, CS.D = 0). If the target is not a 64-bit code segment, a general-protection exception (#GP) is generated with the IDT vector number reported as the error code.

Only 64-bit interrupt and trap gates can be referenced in IA-32e mode (64-bit mode and compatibility mode). Legacy 32-bit interrupt or trap gate types (0EH or 0FH) are redefined in IA-32e mode as 64-bit interrupt and trap gate types. No 32-bit interrupt or trap gate type exists in IA-32e mode. If a reference is made to a 16-bit interrupt or trap gate (06H or 07H), a general-protection exception (#GP(0)) is generated.

6.14.2 64-Bit Mode Stack Frame

In legacy mode, the size of an IDT entry (16 bits or 32 bits) determines the size of interrupt-stack-frame pushes. SS:ESP is pushed only on a CPL change. In 64-bit mode, the size of interrupt stack-frame pushes is fixed at eight bytes. This is because only 64-bit mode gates can be referenced. 64-bit mode also pushes SS:RSP unconditionally, rather than only on a CPL change.

When shadow stacks are enabled at the interrupt handler's privilege level and the interrupted procedure was not executing at a privilege level 3, then the processor pushes the CS:LIP:SSP of the interrupted procedure on the shadow stack of the interrupt handler (where LIP is the linear address of the return address).

Aside from error codes, pushing SS:RSP unconditionally presents operating systems with a consistent interrupt-stackframe size across all interrupts. Interrupt service-routine entry points that handle interrupts generated by the INTn instruction or external INTR# signal can push an additional error code place-holder to maintain consistency.

In legacy mode, the stack pointer may be at any alignment when an interrupt or exception causes a stack frame to be pushed. This causes the stack frame and succeeding pushes done by an interrupt handler to be at arbitrary alignments. In IA-32e mode, the RSP is aligned to a 16-byte boundary before pushing the stack frame. The stack frame itself is aligned on a 16-byte boundary when the interrupt handler is called. The processor can arbitrarily realign the new RSP on interrupts because the previous (possibly unaligned) RSP is unconditionally saved on the newly aligned stack. The previous RSP will be automatically restored by a subsequent IRET.

Aligning the stack permits exception and interrupt frames to be aligned on a 16-byte boundary before interrupts are re-enabled. This allows the stack to be formatted for optimal storage of 16-byte XMM registers, which enables the interrupt handler to use faster 16-byte aligned loads and stores (MOVAPS rather than MOVUPS) to save and restore XMM registers.

Although the RSP alignment is always performed when LMA = 1, it is only of consequence for the kernel-mode case where there is no stack switch or IST used. For a stack switch or IST, the OS would have presumably put suitably aligned RSP values in the TSS.

6.14.3 IRET in IA-32e Mode

In IA-32e mode, IRET executes with an 8-byte operand size. There is nothing that forces this requirement. The stack is formatted in such a way that for actions where IRET is required, the 8-byte IRET operand size works correctly.

Because interrupt stack-frame pushes are always eight bytes in IA-32e mode, an IRET must pop eight byte items off the stack. This is accomplished by preceding the IRET with a 64-bit operand-size prefix. The size of the pop is determined by the address size of the instruction. The SS/ESP/RSP size adjustment is determined by the stack size.

IRET pops SS:RSP unconditionally off the interrupt stack frame only when it is executed in 64-bit mode. In compatibility mode, IRET pops SS:RSP off the stack only if there is a CPL change. This allows legacy applications to execute properly in compatibility mode when using the IRET instruction. 64-bit interrupt service routines that exit with an IRET unconditionally pop SS:RSP off of the interrupt stack frame, even if the target code segment is running in 64-bit mode or at CPL = 0. This is because the original interrupt always pushes SS:RSP.

When shadow stacks are enabled and the target privilege level is not 3, the CS:LIP from the shadow stack frame is compared to the return linear address formed by CS:EIP from the stack. If they do not match then the processor caused a control protection exception (#CP(FAR-RET/IRET)), else the processor pops the SSP of the interrupted procedure from the shadow stack. If the target privilege level is 3 and shadow stacks are enabled at privilege level 3, then the SSP for the interrupted procedure is restored from the IA32_PL3_SSP MSR.

In IA-32e mode, IRET is allowed to load a NULL SS under certain conditions. If the target mode is 64-bit mode and the target CPL ≠ 3, IRET allows SS to be loaded with a NULL selector. As part of the stack switch mechanism, an interrupt or exception sets the new SS to NULL, instead of fetching a new SS selector from the TSS and loading the corresponding descriptor from the GDT or LDT. The new SS selector is set to NULL in order to properly handle returns from subsequent nested far transfers. If the called procedure itself is interrupted, the NULL SS is pushed on the stack frame. On the subsequent IRET, the NULL SS on the stack acts as a flag to tell the processor not to load a new SS descriptor.

6.14.4 Stack Switching in IA-32e Mode

The IA-32 architecture provides a mechanism to automatically switch stack frames in response to an interrupt. The 64-bit extensions of Intel 64 architecture implement a modified version of the legacy stack-switching mechanism and an alternative stack-switching mechanism called the interrupt stack table (IST).

In IA-32 modes, the legacy IA-32 stack-switch mechanism is unchanged. In IA-32e mode, the legacy stack-switch mechanism is modified. When stacks are switched as part of a 64-bit mode privilege-level change (resulting from an interrupt), a new SS descriptor is not loaded. IA-32e mode loads only an inner-level RSP from the TSS. The new SS selector is forced to NULL and the SS selector's RPL field is set to the new CPL. The new SS is set to NULL in order to handle nested far transfers (far CALL, INT, interrupts, and exceptions). The old SS and RSP are saved on the new stack (Figure 6-9). On the subsequent IRET, the old SS is popped from the stack and loaded into the SS register.

In summary, a stack switch in IA-32e mode works like the legacy stack switch, except that a new SS selector is not loaded from the TSS. Instead, the new SS is forced to NULL.

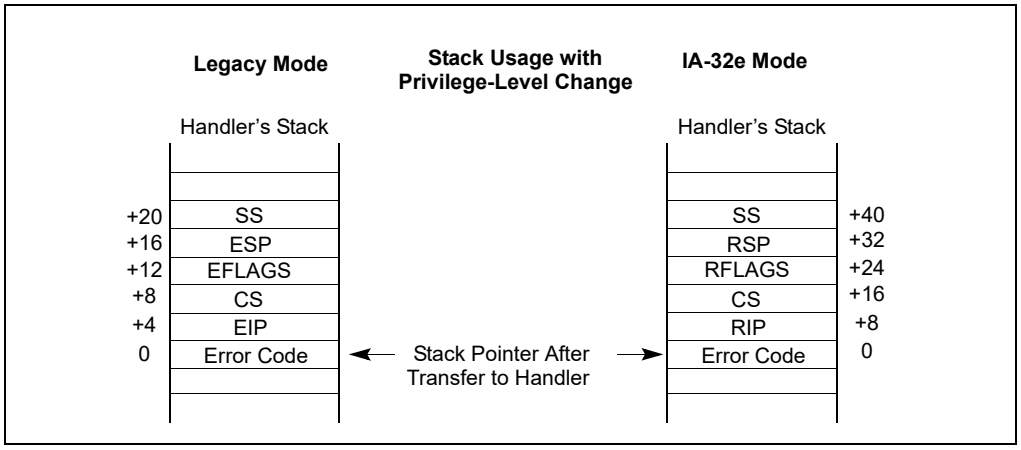

Figure 6-9. IA-32e Mode Stack Usage After Privilege Level Change

6.14.5 Interrupt Stack Table

In IA-32e mode, a new interrupt stack table (IST) mechanism is available as an alternative to the modified legacy stack-switching mechanism described above. This mechanism unconditionally switches stacks when it is enabled. It can be enabled on an individual interrupt-vector basis using a field in the IDT entry. This means that some interrupt vectors can use the modified legacy mechanism and others can use the IST mechanism.

The IST mechanism is only available in IA-32e mode. It is part of the 64-bit mode TSS. The motivation for the IST mechanism is to provide a method for specific interrupts (such as NMI, double-fault, and machine-check) to always execute on a known good stack. In legacy mode, interrupts can use the task-switch mechanism to set up a known-good stack by accessing the interrupt service routine through a task gate located in the IDT. However, the legacy task-switch mechanism is not supported in IA-32e mode.

The IST mechanism provides up to seven IST pointers in the TSS. The pointers are referenced by an interrupt-gate descriptor in the interrupt-descriptor table (IDT); see Figure 6-8. The gate descriptor contains a 3-bit IST index field that provides an offset into the IST section of the TSS. Using the IST mechanism, the processor loads the value pointed by an IST pointer into the RSP.

When an interrupt occurs, the new SS selector is forced to NULL and the SS selector's RPL field is set to the new CPL. The old SS, RSP, RFLAGS, CS, and RIP are pushed onto the new stack. Interrupt processing then proceeds as normal. If the IST index is zero, the modified legacy stack-switching mechanism described above is used.

To support this stack-switching mechanism with shadow stacks enabled, the processor provides an MSR, IA32_INTERRUPT_SSP_TABLE, to program the linear address of a table of seven shadow stack pointers that are selected using the IST index from the gate descriptor. To switch to a shadow stack selected from the interrupt shadow stack table pointed to by the IA32_INTERRUPT_SSP_TABLE, the processor requires that the shadow stack addresses programmed into this table point to a supervisor shadow stack token; see Figure 6-10.

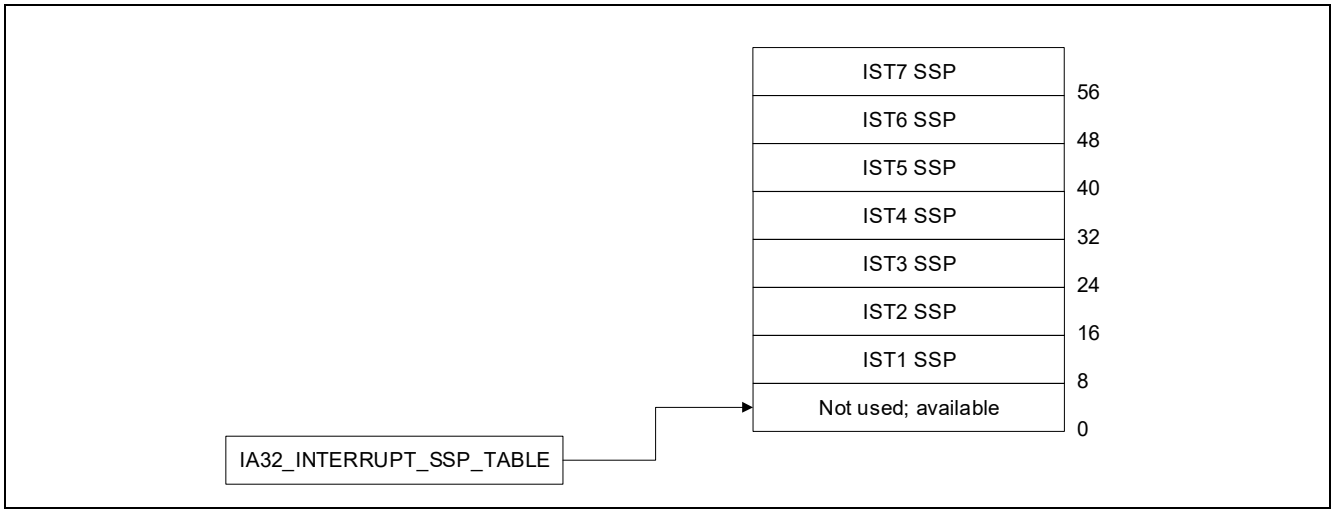

Figure 6-10. Interrupt Shadow Stack Table

6.15 EXCEPTION AND INTERRUPT REFERENCE

The following sections describe conditions which generate exceptions and interrupts. They are arranged in the order of vector numbers. The information contained in these sections are as follows:

- **Exception Class** — Indicates whether the exception class is a fault, trap, or abort type. Some exceptions can be either a fault or trap type, depending on when the error condition is detected. (This section is not applicable to interrupts.)
- **Description** — Gives a general description of the purpose of the exception or interrupt type. It also describes how the processor handles the exception or interrupt.
- **Exception Error Code** — Indicates whether an error code is saved for the exception. If one is saved, the contents of the error code are described. (This section is not applicable to interrupts.)
- **Saved Instruction Pointer** — Describes which instruction the saved (or return) instruction pointer points to. It also indicates whether the pointer can be used to restart a faulting instruction.
- **Program State Change** — Describes the effects of the exception or interrupt on the state of the currently running program or task and the possibilities of restarting the program or task without loss of continuity.

Interrupt 0—Divide Error Exception (#DE)

Exception Class Fault.

Description

Indicates the divisor operand for a DIV or IDIV instruction is 0 or that the result cannot be represented in the number of bits specified for the destination operand.

Exception Error Code

None.

Saved Instruction Pointer

Saved contents of CS and EIP registers point to the instruction that generated the exception.

Program State Change

A program-state change does not accompany the divide error, because the exception occurs before the faulting instruction is executed.

Interrupt 1—Debug Exception (#DB)

Exception Class **Trap or Fault. The exception handler can distinguish between traps or faults by examining the contents of DR6 and the other debug registers.**

Description

Indicates that one or more of several debug-exception conditions has been detected. Whether the exception is a fault or a trap depends on the condition (see Table 6-3). See Chapter 18, "Debug, Branch Profile, TSC, and Intel® Resource Director Technology (Intel® RDT) Features," for detailed information about the debug exceptions.

Table 6-3. Debug Exception Conditions and Corresponding Exception Classes

Exception Condition	Exception Class
Instruction fetch breakpoint	Fault
Data read or write breakpoint	Trap
I/O read or write breakpoint	Trap
General detect condition (in conjunction with in-circuit emulation)	Fault
Single-step	Trap
Task-switch	Trap
Execution of INT1[1]	Trap

NOTES:

1. Hardware vendors may use the INT1 instruction for hardware debug. For that reason, Intel recommends software vendors instead use the INT3 instruction for software breakpoints.

Exception Error Code

None. An exception handler can examine the debug registers to determine which condition caused the exception.

Saved Instruction Pointer

Fault — Saved contents of CS and EIP registers point to the instruction that generated the exception.

Trap — Saved contents of CS and EIP registers point to the instruction following the instruction that generated the exception.

Program State Change

Fault — A program-state change does not accompany the debug exception, because the exception occurs before the faulting instruction is executed. The program can resume normal execution upon returning from the debug exception handler.

Trap — A program-state change does accompany the debug exception, because the instruction or task switch being executed is allowed to complete before the exception is generated. However, the new state of the program is not corrupted and execution of the program can continue reliably.

The following items detail the treatment of debug exceptions on the instruction boundary following execution of the MOV or the POP instruction that loads the SS register:

- If EFLAGS.TF is 1, no single-step trap is generated.
- If the instruction encounters a data breakpoint, the resulting debug exception is delivered after completion of the instruction after the MOV or POP. This occurs even if the next instruction is INT *n*, INT3, or INTO.
- Any instruction breakpoint on the instruction after the MOV or POP is suppressed (as if EFLAGS.RF were 1).

Any debug exception inside an RTM region causes a transactional abort and, by default, redirects control flow to the fallback instruction address. If advanced debugging of RTM transactional regions has been enabled, any transactional abort due to a debug exception instead causes execution to roll back to just before the XBEGIN instruction

and then delivers a #DB. See Section 16.3.7, "RTM-Enabled Debugger Support," of *Intel® 64 and IA-32 Architectures Software Developer's Manual, Volume 1*.

Interrupt 2—NMI Interrupt

Exception Class Not applicable.

Description

The nonmaskable interrupt (NMI) is generated externally by asserting the processor's NMI pin or through an NMI request set by the I/O APIC to the local APIC. This interrupt causes the NMI interrupt handler to be called.

Exception Error Code

Not applicable.

Saved Instruction Pointer

The processor always takes an NMI interrupt on an instruction boundary. The saved contents of CS and EIP registers point to the next instruction to be executed at the point the interrupt is taken. See Section 6.5, "Exception Classifications," for more information about when the processor takes NMI interrupts.

Program State Change

The instruction executing when an NMI interrupt is received is completed before the NMI is generated. A program or task can thus be restarted upon returning from an interrupt handler without loss of continuity, provided the interrupt handler saves the state of the processor before handling the interrupt and restores the processor's state prior to a return.

Interrupt 3—Breakpoint Exception (#BP)

Exception Class Trap.

Description

Indicates that a breakpoint instruction (INT3, opcode CC) was executed, causing a breakpoint trap to be generated. Typically, a debugger sets a breakpoint by replacing the first opcode byte of an instruction with the opcode for the INT3 instruction. (The INT3 instruction is one byte long, which makes it easy to replace an opcode in a code segment in RAM with the breakpoint opcode.) The operating system or a debugging tool can use a data segment mapped to the same physical address space as the code segment to place an INT3 instruction in places where it is desired to call the debugger.

With the P6 family, Pentium, Intel486, and Intel386 processors, it is more convenient to set breakpoints with the debug registers. (See Section 18.3.2, "Breakpoint Exception (#BP)—Interrupt Vector 3," for information about the breakpoint exception.) If more breakpoints are needed beyond what the debug registers allow, the INT3 instruction can be used.

Any breakpoint exception inside an RTM region causes a transactional abort and, by default, redirects control flow to the fallback instruction address. If advanced debugging of RTM transactional regions has been enabled, any transactional abort due to a break exception instead causes execution to roll back to just before the XBEGIN instruction and then delivers a **debug exception** (#DB) — **not** a breakpoint exception. See Section 16.3.7, "RTM-Enabled Debugger Support," of *Intel® 64 and IA-32 Architectures Software Developer's Manual, Volume 1*.

A breakpoint exception can also be generated by executing the INT *n* instruction with an operand of 3. The action of this instruction (INT 3) is slightly different than that of the INT3 instruction (see "INT n/INTO/INT3/INT1—Call to Interrupt Procedure" in Chapter 3 of the *Intel® 64 and IA-32 Architectures Software Developer's Manual, Volume 2A*).

Exception Error Code

None.

Saved Instruction Pointer

Saved contents of CS and EIP registers point to the instruction following the INT3 instruction.

Program State Change

Even though the EIP points to the instruction following the breakpoint instruction, the state of the program is essentially unchanged because the INT3 instruction does not affect any register or memory locations. The debugger can thus resume the suspended program by replacing the INT3 instruction that caused the breakpoint with the original opcode and decrementing the saved contents of the EIP register. Upon returning from the debugger, program execution resumes with the replaced instruction.

Interrupt 4—Overflow Exception (#OF)

Exception Class Trap.

Description

Indicates that an overflow trap occurred when an INTO instruction was executed. The INTO instruction checks the state of the OF flag in the EFLAGS register. If the OF flag is set, an overflow trap is generated.

Some arithmetic instructions (such as the ADD and SUB) perform both signed and unsigned arithmetic. These instructions set the OF and CF flags in the EFLAGS register to indicate signed overflow and unsigned overflow, respectively. When performing arithmetic on signed operands, the OF flag can be tested directly or the INTO instruction can be used. The benefit of using the INTO instruction is that if the overflow exception is detected, an exception handler can be called automatically to handle the overflow condition.

Exception Error Code

None.

Saved Instruction Pointer

The saved contents of CS and EIP registers point to the instruction following the INTO instruction.

Program State Change

Even though the EIP points to the instruction following the INTO instruction, the state of the program is essentially unchanged because the INTO instruction does not affect any register or memory locations. The program can thus resume normal execution upon returning from the overflow exception handler.

Interrupt 5—BOUND Range Exceeded Exception (#BR)

Exception Class Fault.

Description

Indicates that a BOUND-range-exceeded fault occurred when a BOUND instruction was executed. The BOUND instruction checks that a signed array index is within the upper and lower bounds of an array located in memory. If the array index is not within the bounds of the array, a BOUND-range-exceeded fault is generated.

Exception Error Code

None.

Saved Instruction Pointer

The saved contents of CS and EIP registers point to the BOUND instruction that generated the exception.

Program State Change

A program-state change does not accompany the bounds-check fault, because the operands for the BOUND instruction are not modified. Returning from the BOUND-range-exceeded exception handler causes the BOUND instruction to be restarted.

Interrupt 6—Invalid Opcode Exception (#UD)

Exception Class Fault.

Description

Indicates that the processor did one of the following things:

- Attempted to execute an invalid or reserved opcode.
- Attempted to execute an instruction with an operand type that is invalid for its accompanying opcode; for example, the source operand for a LES instruction is not a memory location.
- Attempted to execute an MMX or SSE/SSE2/SSE3 instruction on an Intel 64 or IA-32 processor that does not support the MMX technology or SSE/SSE2/SSE3/SSSE3 extensions, respectively. CPUID feature flags MMX (bit 23), SSE (bit 25), SSE2 (bit 26), SSE3 (ECX, bit 0), SSSE3 (ECX, bit 9) indicate support for these extensions.
- Attempted to execute an MMX instruction or SSE/SSE2/SSE3/SSSE3 SIMD instruction (with the exception of the MOVNTI, PAUSE, PREFETCH*h*, SFENCE, LFENCE, MFENCE, CLFLUSH, MONITOR, and MWAIT instructions) when the EM flag in control register CR0 is set (1).
- Attempted to execute an SSE/SE2/SSE3/SSSE3 instruction when the OSFXSR bit in control register CR4 is clear (0). Note this does not include the following SSE/SSE2/SSE3 instructions: MASKMOVQ, MOVNTQ, MOVNTI, PREFETCH*h*, SFENCE, LFENCE, MFENCE, and CLFLUSH; or the 64-bit versions of the PAVGB, PAVGW, PEXTRW, PINSRW, PMAXSW, PMAXUB, PMINSW, PMINUB, PMOVMSKB, PMULHUW, PSADBW, PSHUFW, PADDQ, PSUBQ, PALIGNR, PABSB, PABSD, PABSW, PHADDD, PHADDSW, PHADDW, PHSUBD, PHSUBSW, PHSUBW, PMADDUBSM, PMULHRSW, PSHUFB, PSIGNB, PSIGND, and PSIGNW.
- Attempted to execute an SSE/SSE2/SSE3/SSSE3 instruction on an Intel 64 or IA-32 processor that caused a SIMD floating-point exception when the OSXMMEXCPT bit in control register CR4 is clear (0).
- Executed a UD0, UD1 or UD2 instruction. Note that even though it is the execution of the UD0, UD1 or UD2 instruction that causes the invalid opcode exception, the saved instruction pointer will still points at the UD0, UD1 or UD2 instruction.
- Detected a LOCK prefix that precedes an instruction that may not be locked or one that may be locked but the destination operand is not a memory location.
- Attempted to execute an LLDT, SLDT, LTR, STR, LSL, LAR, VERR, VERW, or ARPL instruction while in real-address or virtual-8086 mode.
- Attempted to execute the RSM instruction when not in SMM mode.

In Intel 64 and IA-32 processors that implement out-of-order execution microarchitectures, this exception is not generated until an attempt is made to retire the result of executing an invalid instruction; that is, decoding and speculatively attempting to execute an invalid opcode does not generate this exception. Likewise, in the Pentium processor and earlier IA-32 processors, this exception is not generated as the result of prefetching and preliminary decoding of an invalid instruction. (See Section 6.5, "Exception Classifications," for general rules for taking of interrupts and exceptions.)

The opcodes D6 and F1 are undefined opcodes reserved by the Intel 64 and IA-32 architectures. These opcodes, even though undefined, do not generate an invalid opcode exception.

Exception Error Code

None.

Saved Instruction Pointer

The saved contents of CS and EIP registers point to the instruction that generated the exception.

Program State Change

A program-state change does not accompany an invalid-opcode fault, because the invalid instruction is not executed.

Interrupt 7—Device Not Available Exception (#NM)

Exception Class Fault.

Description

Indicates one of the following things:

The device-not-available exception is generated by either of three conditions:

- The processor executed an x87 FPU floating-point instruction while the EM flag in control register CR0 was set (1). See the paragraph below for the special case of the WAIT/FWAIT instruction.
- The processor executed a WAIT/FWAIT instruction while the MP and TS flags of register CR0 were set, regardless of the setting of the EM flag.
- The processor executed an x87 FPU, MMX, or SSE/SSE2/SSE3 instruction (with the exception of MOVNTI, PAUSE, PREFETCH*h*, SFENCE, LFENCE, MFENCE, and CLFLUSH) while the TS flag in control register CR0 was set and the EM flag is clear.

The EM flag is set when the processor does not have an internal x87 FPU floating-point unit. A device-not-available exception is then generated each time an x87 FPU floating-point instruction is encountered, allowing an exception handler to call floating-point instruction emulation routines.

The TS flag indicates that a context switch (task switch) has occurred since the last time an x87 floating-point, MMX, or SSE/SSE2/SSE3 instruction was executed; but that the context of the x87 FPU, XMM, and MXCSR registers were not saved. When the TS flag is set and the EM flag is clear, the processor generates a device-not-available exception each time an x87 floating-point, MMX, or SSE/SSE2/SSE3 instruction is encountered (with the exception of the instructions listed above). The exception handler can then save the context of the x87 FPU, XMM, and MXCSR registers before it executes the instruction. See Section 2.5, "Control Registers," for more information about the TS flag.

The MP flag in control register CR0 is used along with the TS flag to determine if WAIT or FWAIT instructions should generate a device-not-available exception. It extends the function of the TS flag to the WAIT and FWAIT instructions, giving the exception handler an opportunity to save the context of the x87 FPU before the WAIT or FWAIT instruction is executed. The MP flag is provided primarily for use with the Intel 286 and Intel386 DX processors. For programs running on the Pentium 4, Intel Xeon, P6 family, Pentium, or Intel486 DX processors, or the Intel 487 SX coprocessors, the MP flag should always be set; for programs running on the Intel486 SX processor, the MP flag should be clear.

Exception Error Code

None.

Saved Instruction Pointer

The saved contents of CS and EIP registers point to the floating-point instruction or the WAIT/FWAIT instruction that generated the exception.

Program State Change

A program-state change does not accompany a device-not-available fault, because the instruction that generated the exception is not executed.

If the EM flag is set, the exception handler can then read the floating-point instruction pointed to by the EIP and call the appropriate emulation routine.

If the MP and TS flags are set or the TS flag alone is set, the exception handler can save the context of the x87 FPU, clear the TS flag, and continue execution at the interrupted floating-point or WAIT/FWAIT instruction.

Interrupt 8—Double Fault Exception (#DF)

Exception Class Abort.

Description

Indicates that the processor detected a second exception while calling an exception handler for a prior exception. Normally, when the processor detects another exception while trying to call an exception handler, the two exceptions can be handled serially. If, however, the processor cannot handle them serially, it signals the double-fault exception. To determine when two faults need to be signalled as a double fault, the processor divides the exceptions into three classes: benign exceptions, contributory exceptions, and page faults (see Table 6-4).

Table 6-4. Interrupt and Exception Classes

Class	Vector Number	Description
Benign Exceptions and Interrupts	1 2 3 4 5 6 7 9 16 17 18 19 All All	Debug NMI Interrupt Breakpoint Overflow BOUND Range Exceeded Invalid Opcode Device Not Available Coprocessor Segment Overrun Floating-Point Error Alignment Check Machine Check SIMD floating-point INT *n* INTR
Contributory Exceptions	0 10 11 12 13 21	Divide Error Invalid TSS Segment Not Present Stack Fault General Protection Control Protection
Page Faults	14 20	Page Fault Virtualization Exception

Table 6-5 shows the various combinations of exception classes that cause a double fault to be generated. A double-fault exception falls in the abort class of exceptions. The program or task cannot be restarted or resumed. The double-fault handler can be used to collect diagnostic information about the state of the machine and/or, when possible, to shut the application and/or system down gracefully or restart the system.

A segment or page fault may be encountered while prefetching instructions; however, this behavior is outside the domain of Table 6-5. Any further faults generated while the processor is attempting to transfer control to the appropriate fault handler could still lead to a double-fault sequence.

Table 6-5. Conditions for Generating a Double Fault

First Exception	Second Exception		
	Benign	**Contributory**	**Page Fault**
Benign	Handle Exceptions Serially	Handle Exceptions Serially	Handle Exceptions Serially
Contributory	Handle Exceptions Serially	Generate a Double Fault	Handle Exceptions Serially
Page Fault	Handle Exceptions Serially	Generate a Double Fault	Generate a Double Fault
Double Fault	Handle Exceptions Serially	Enter Shutdown Mode	Enter Shutdown Mode

If another contributory or page fault exception occurs while attempting to call the double-fault handler, the processor enters shutdown mode. This mode is similar to the state following execution of an HLT instruction. In this mode, the processor stops executing instructions until an NMI interrupt, SMI interrupt, hardware reset, or INIT# is received. The processor generates a special bus cycle to indicate that it has entered shutdown mode. Software designers may need to be aware of the response of hardware when it goes into shutdown mode. For example, hardware may turn on an indicator light on the front panel, generate an NMI interrupt to record diagnostic information, invoke reset initialization, generate an INIT initialization, or generate an SMI. If any events are pending during shutdown, they will be handled after an wake event from shutdown is processed (for example, A20M# interrupts).

If a shutdown occurs while the processor is executing an NMI interrupt handler, then only a hardware reset can restart the processor. Likewise, if the shutdown occurs while executing in SMM, a hardware reset must be used to restart the processor.

Exception Error Code

Zero. The processor always pushes an error code of 0 onto the stack of the double-fault handler.

Saved Instruction Pointer

The saved contents of CS and EIP registers are undefined.

Program State Change

A program-state following a double-fault exception is undefined. The program or task cannot be resumed or restarted. The only available action of the double-fault exception handler is to collect all possible context information for use in diagnostics and then close the application and/or shut down or reset the processor.

If the double fault occurs when any portion of the exception handling machine state is corrupted, the handler cannot be invoked and the processor must be reset.

Interrupt 9—Coprocessor Segment Overrun

Exception Class

Abort. (Intel reserved; do not use. Recent IA-32 processors do not generate this exception.)

Description

Indicates that an Intel386 CPU-based systems with an Intel 387 math coprocessor detected a page or segment violation while transferring the middle portion of an Intel 387 math coprocessor operand. The P6 family, Pentium, and Intel486 processors do not generate this exception; instead, this condition is detected with a general protection exception (#GP), interrupt 13.

Exception Error Code

None.

Saved Instruction Pointer

The saved contents of CS and EIP registers point to the instruction that generated the exception.

Program State Change

A program-state following a coprocessor segment-overrun exception is undefined. The program or task cannot be resumed or restarted. The only available action of the exception handler is to save the instruction pointer and reinitialize the x87 FPU using the FNINIT instruction.

Interrupt 10—Invalid TSS Exception (#TS)

Exception Class Fault.

Description

Indicates that there was an error related to a TSS. Such an error might be detected during a task switch or during the execution of instructions that use information from a TSS. Table 6-6 shows the conditions that cause an invalid TSS exception to be generated.

Table 6-6. Invalid TSS Conditions

Error Code Index	Invalid Condition
TSS segment selector index	The TSS segment limit is less than 67H for 32-bit TSS or less than 2CH for 16-bit TSS.
TSS segment selector index	During an IRET task switch, the TI flag in the TSS segment selector indicates the LDT.
TSS segment selector index	During an IRET task switch, the TSS segment selector exceeds descriptor table limit.
TSS segment selector index	During an IRET task switch, the busy flag in the TSS descriptor indicates an inactive task.
TSS segment selector index	During a task switch, an attempt to access data in a TSS results in a limit violation or canonical fault.
TSS segment selector index	During an IRET task switch, the backlink is a NULL selector.
TSS segment selector index	During an IRET task switch, the backlink points to a descriptor which is not a busy TSS.
TSS segment selector index	The new TSS descriptor is beyond the GDT limit.
TSS segment selector index	The new TSS selector is null on an attempt to lock the new TSS.
TSS segment selector index	The new TSS selector has the TI bit set on an attempt to lock the new TSS.
TSS segment selector index	The new TSS descriptor is not an available TSS descriptor on an attempt to lock the new TSS.
LDT segment selector index	LDT not valid or not present.
Stack segment selector index	The stack segment selector exceeds descriptor table limit.
Stack segment selector index	The stack segment selector is NULL.
Stack segment selector index	The stack segment descriptor is a non-data segment.
Stack segment selector index	The stack segment is not writable.
Stack segment selector index	The stack segment DPL ≠ CPL.
Stack segment selector index	The stack segment selector RPL ≠ CPL.
Code segment selector index	The code segment selector exceeds descriptor table limit.
Code segment selector index	The code segment selector is NULL.
Code segment selector index	The code segment descriptor is not a code segment type.
Code segment selector index	The nonconforming code segment DPL ≠ CPL.
Code segment selector index	The conforming code segment DPL is greater than CPL.
Data segment selector index	The data segment selector exceeds the descriptor table limit.
Data segment selector index	The data segment descriptor is not a readable code or data type.
Data segment selector index	The data segment descriptor is a nonconforming code type and RPL > DPL.
Data segment selector index	The data segment descriptor is a nonconforming code type and CPL > DPL.
TSS segment selector index	The TSS segment descriptor/upper descriptor is beyond the GDT segment limit.
TSS segment selector index	The TSS segment descriptor is not an available TSS type.
TSS segment selector index	The TSS segment descriptor is an available 286 TSS type in IA-32e mode.

Table 6-6. Invalid TSS Conditions (Contd.)

Error Code Index	Invalid Condition
TSS segment selector index	The TSS segment upper descriptor is not the correct type.
TSS segment selector index	The TSS segment descriptor contains a non-canonical base.

This exception can generated either in the context of the original task or in the context of the new task (see Section 8.3, "Task Switching"). Until the processor has completely verified the presence of the new TSS, the exception is generated in the context of the original task. Once the existence of the new TSS is verified, the task switch is considered complete. Any invalid-TSS conditions detected after this point are handled in the context of the new task. (A task switch is considered complete when the task register is loaded with the segment selector for the new TSS and, if the switch is due to a procedure call or interrupt, the previous task link field of the new TSS references the old TSS.)

The invalid-TSS handler must be a task called using a task gate. Handling this exception inside the faulting TSS context is not recommended because the processor state may not be consistent.

Exception Error Code

An error code containing the segment selector index for the segment descriptor that caused the violation is pushed onto the stack of the exception handler. If the EXT flag is set, it indicates that the exception was caused by an event external to the currently running program (for example, if an external interrupt handler using a task gate attempted a task switch to an invalid TSS).

Saved Instruction Pointer

If the exception condition was detected before the task switch was carried out, the saved contents of CS and EIP registers point to the instruction that invoked the task switch. If the exception condition was detected after the task switch was carried out, the saved contents of CS and EIP registers point to the first instruction of the new task.

Program State Change

The ability of the invalid-TSS handler to recover from the fault depends on the error condition than causes the fault. See Section 8.3, "Task Switching," for more information on the task switch process and the possible recovery actions that can be taken.

If an invalid TSS exception occurs during a task switch, it can occur before or after the commit-to-new-task point. If it occurs before the commit point, no program state change occurs. If it occurs after the commit point (when the segment descriptor information for the new segment selectors have been loaded in the segment registers), the processor will load all the state information from the new TSS before it generates the exception. During a task switch, the processor first loads all the segment registers with segment selectors from the TSS, then checks their contents for validity. If an invalid TSS exception is discovered, the remaining segment registers are loaded but not checked for validity and therefore may not be usable for referencing memory. The invalid TSS handler should not rely on being able to use the segment selectors found in the CS, SS, DS, ES, FS, and GS registers without causing another exception. The exception handler should load all segment registers before trying to resume the new task; otherwise, general-protection exceptions (#GP) may result later under conditions that make diagnosis more difficult. The Intel recommended way of dealing situation is to use a task for the invalid TSS exception handler. The task switch back to the interrupted task from the invalid-TSS exception-handler task will then cause the processor to check the registers as it loads them from the TSS.

Interrupt 11—Segment Not Present (#NP)

Exception Class Fault.

Description

Indicates that the present flag of a segment or gate descriptor is clear. The processor can generate this exception during any of the following operations:

- While attempting to load CS, DS, ES, FS, or GS registers. [Detection of a not-present segment while loading the SS register causes a stack fault exception (#SS) to be generated.] This situation can occur while performing a task switch.
- While attempting to load the LDTR using an LLDT instruction. Detection of a not-present LDT while loading the LDTR during a task switch operation causes an invalid-TSS exception (#TS) to be generated.
- When executing the LTR instruction and the TSS is marked not present.
- While attempting to use a gate descriptor or TSS that is marked segment-not-present, but is otherwise valid.

An operating system typically uses the segment-not-present exception to implement virtual memory at the segment level. If the exception handler loads the segment and returns, the interrupted program or task resumes execution.

A not-present indication in a gate descriptor, however, does not indicate that a segment is not present (because gates do not correspond to segments). The operating system may use the present flag for gate descriptors to trigger exceptions of special significance to the operating system.

A contributory exception or page fault that subsequently referenced a not-present segment would cause a double fault (#DF) to be generated instead of #NP.

Exception Error Code

An error code containing the segment selector index for the segment descriptor that caused the violation is pushed onto the stack of the exception handler. If the EXT flag is set, it indicates that the exception resulted from either:

- an external event (NMI or INTR) that caused an interrupt, which subsequently referenced a not-present segment
- a benign exception that subsequently referenced a not-present segment

The IDT flag is set if the error code refers to an IDT entry. This occurs when the IDT entry for an interrupt being serviced references a not-present gate. Such an event could be generated by an INT instruction or a hardware interrupt.

Saved Instruction Pointer

The saved contents of CS and EIP registers normally point to the instruction that generated the exception. If the exception occurred while loading segment descriptors for the segment selectors in a new TSS, the CS and EIP registers point to the first instruction in the new task. If the exception occurred while accessing a gate descriptor, the CS and EIP registers point to the instruction that invoked the access (for example a CALL instruction that references a call gate).

Program State Change

If the segment-not-present exception occurs as the result of loading a register (CS, DS, SS, ES, FS, GS, or LDTR), a program-state change does accompany the exception because the register is not loaded. Recovery from this exception is possible by simply loading the missing segment into memory and setting the present flag in the segment descriptor.

If the segment-not-present exception occurs while accessing a gate descriptor, a program-state change does not accompany the exception. Recovery from this exception is possible merely by setting the present flag in the gate descriptor.

If a segment-not-present exception occurs during a task switch, it can occur before or after the commit-to-new-task point (see Section 8.3, “Task Switching”). If it occurs before the commit point, no program state change

occurs. If it occurs after the commit point, the processor will load all the state information from the new TSS (without performing any additional limit, present, or type checks) before it generates the exception. The segment-not-present exception handler should not rely on being able to use the segment selectors found in the CS, SS, DS, ES, FS, and GS registers without causing another exception. (See the Program State Change description for "Interrupt 10—Invalid TSS Exception (#TS)" in this chapter for additional information on how to handle this situation.)

Interrupt 12—Stack Fault Exception (#SS)

Exception Class Fault.

Description

Indicates that one of the following stack related conditions was detected:

- A limit violation is detected during an operation that refers to the SS register. Operations that can cause a limit violation include stack-oriented instructions such as POP, PUSH, CALL, RET, IRET, ENTER, and LEAVE, as well as other memory references which implicitly or explicitly use the SS register (for example, MOV AX, [BP+6] or MOV AX, SS:[EAX+6]). The ENTER instruction generates this exception when there is not enough stack space for allocating local variables.
- A not-present stack segment is detected when attempting to load the SS register. This violation can occur during the execution of a task switch, a CALL instruction to a different privilege level, a return to a different privilege level, an LSS instruction, or a MOV or POP instruction to the SS register.
- A canonical violation is detected in 64-bit mode during an operation that reference memory using the stack pointer register containing a non-canonical memory address.

Recovery from this fault is possible by either extending the limit of the stack segment (in the case of a limit violation) or loading the missing stack segment into memory (in the case of a not-present violation.

In the case of a canonical violation that was caused intentionally by software, recovery is possible by loading the correct canonical value into RSP. Otherwise, a canonical violation of the address in RSP likely reflects some register corruption in the software.

Exception Error Code

If the exception is caused by a not-present stack segment or by overflow of the new stack during an inter-privilege-level call, the error code contains a segment selector for the segment that caused the exception. Here, the exception handler can test the present flag in the segment descriptor pointed to by the segment selector to determine the cause of the exception. For a normal limit violation (on a stack segment already in use) the error code is set to 0.

Saved Instruction Pointer

The saved contents of CS and EIP registers generally point to the instruction that generated the exception. However, when the exception results from attempting to load a not-present stack segment during a task switch, the CS and EIP registers point to the first instruction of the new task.

Program State Change

A program-state change does not generally accompany a stack-fault exception, because the instruction that generated the fault is not executed. Here, the instruction can be restarted after the exception handler has corrected the stack fault condition.

If a stack fault occurs during a task switch, it occurs after the commit-to-new-task point (see Section 8.3, “Task Switching”). Here, the processor loads all the state information from the new TSS (without performing any additional limit, present, or type checks) before it generates the exception. The stack fault handler should thus not rely on being able to use the segment selectors found in the CS, SS, DS, ES, FS, and GS registers without causing another exception. The exception handler should check all segment registers before trying to resume the new task; otherwise, general protection faults may result later under conditions that are more difficult to diagnose. (See the Program State Change description for “Interrupt 10—Invalid TSS Exception (#TS)” in this chapter for additional information on how to handle this situation.)

Interrupt 13—General Protection Exception (#GP)

Exception Class Fault.

Description

Indicates that the processor detected one of a class of protection violations called "general-protection violations." The conditions that cause this exception to be generated comprise all the protection violations that do not cause other exceptions to be generated (such as, invalid-TSS, segment-not-present, stack-fault, or page-fault exceptions). The following conditions cause general-protection exceptions to be generated:

- Exceeding the segment limit when accessing the CS, DS, ES, FS, or GS segments.
- Exceeding the segment limit when referencing a descriptor table (except during a task switch or a stack switch).
- Transferring execution to a segment that is not executable.
- Writing to a code segment or a read-only data segment.
- Reading from an execute-only code segment.
- Loading the SS register with a segment selector for a read-only segment (unless the selector comes from a TSS during a task switch, in which case an invalid-TSS exception occurs).
- Loading the SS, DS, ES, FS, or GS register with a segment selector for a system segment.
- Loading the DS, ES, FS, or GS register with a segment selector for an execute-only code segment.
- Loading the SS register with the segment selector of an executable segment or a null segment selector.
- Loading the CS register with a segment selector for a data segment or a null segment selector.
- Accessing memory using the DS, ES, FS, or GS register when it contains a null segment selector.
- Switching to a busy task during a call or jump to a TSS.
- Using a segment selector on a non-IRET task switch that points to a TSS descriptor in the current LDT. TSS descriptors can only reside in the GDT. This condition causes a #TS exception during an IRET task switch.
- Violating any of the privilege rules described in Chapter 5, "Protection."
- Exceeding the instruction length limit of 15 bytes (this only can occur when redundant prefixes are placed before an instruction).
- Loading the CR0 register with a set PG flag (paging enabled) and a clear PE flag (protection disabled).
- Loading the CR0 register with a set NW flag and a clear CD flag.
- Referencing an entry in the IDT (following an interrupt or exception) that is not an interrupt, trap, or task gate.
- Attempting to access an interrupt or exception handler through an interrupt or trap gate from virtual-8086 mode when the handler's code segment DPL is greater than 0.
- Attempting to write a 1 into a reserved bit of CR4.
- Attempting to execute a privileged instruction when the CPL is not equal to 0 (see Section 5.9, "Privileged Instructions," for a list of privileged instructions).
- Attempting to execute SGDT, SIDT, SLDT, SMSW, or STR when CR4.UMIP = 1 and the CPL is not equal to 0.
- Writing to a reserved bit in an MSR.
- Accessing a gate that contains a null segment selector.
- Executing the INT *n* instruction when the CPL is greater than the DPL of the referenced interrupt, trap, or task gate.
- The segment selector in a call, interrupt, or trap gate does not point to a code segment.
- The segment selector operand in the LLDT instruction is a local type (TI flag is set) or does not point to a segment descriptor of the LDT type.
- The segment selector operand in the LTR instruction is local or points to a TSS that is not available.
- The target code-segment selector for a call, jump, or return is null.

- If the PAE and/or PSE flag in control register CR4 is set and the processor detects any reserved bits in a page-directory-pointer-table entry set to 1. These bits are checked during a write to control registers CR0, CR3, or CR4 that causes a reloading of the page-directory-pointer-table entry.
- Attempting to write a non-zero value into the reserved bits of the MXCSR register.
- Executing an SSE/SSE2/SSE3 instruction that attempts to access a 128-bit memory location that is not aligned on a 16-byte boundary when the instruction requires 16-byte alignment. This condition also applies to the stack segment.

A program or task can be restarted following any general-protection exception. If the exception occurs while attempting to call an interrupt handler, the interrupted program can be restartable, but the interrupt may be lost.

Exception Error Code

The processor pushes an error code onto the exception handler's stack. If the fault condition was detected while loading a segment descriptor, the error code contains a segment selector to or IDT vector number for the descriptor; otherwise, the error code is 0. The source of the selector in an error code may be any of the following:

- An operand of the instruction.
- A selector from a gate which is the operand of the instruction.
- A selector from a TSS involved in a task switch.
- IDT vector number.

Saved Instruction Pointer

The saved contents of CS and EIP registers point to the instruction that generated the exception.

Program State Change

In general, a program-state change does not accompany a general-protection exception, because the invalid instruction or operation is not executed. An exception handler can be designed to correct all of the conditions that cause general-protection exceptions and restart the program or task without any loss of program continuity.

If a general-protection exception occurs during a task switch, it can occur before or after the commit-to-new-task point (see Section 8.3, “Task Switching”). If it occurs before the commit point, no program state change occurs. If it occurs after the commit point, the processor will load all the state information from the new TSS (without performing any additional limit, present, or type checks) before it generates the exception. The general-protection exception handler should thus not rely on being able to use the segment selectors found in the CS, SS, DS, ES, FS, and GS registers without causing another exception. (See the Program State Change description for “Interrupt 10—Invalid TSS Exception (#TS)” in this chapter for additional information on how to handle this situation.)

General Protection Exception in 64-bit Mode

The following conditions cause general-protection exceptions in 64-bit mode:

- If the memory address is in a non-canonical form.
- If a segment descriptor memory address is in non-canonical form.
- If the target offset in a destination operand of a call or jmp is in a non-canonical form.
- If a code segment or 64-bit call gate overlaps non-canonical space.
- If the code segment descriptor pointed to by the selector in the 64-bit gate doesn't have the L-bit set and the D-bit clear.
- If the EFLAGS.NT bit is set in IRET.
- If the stack segment selector of IRET is null when going back to compatibility mode.
- If the stack segment selector of IRET is null going back to CPL3 and 64-bit mode.
- If a null stack segment selector RPL of IRET is not equal to CPL going back to non-CPL3 and 64-bit mode.
- If the proposed new code segment descriptor of IRET has both the D-bit and the L-bit set.

- If the segment descriptor pointed to by the segment selector in the destination operand is a code segment and it has both the D-bit and the L-bit set.
- If the segment descriptor from a 64-bit call gate is in non-canonical space.
- If the DPL from a 64-bit call-gate is less than the CPL or than the RPL of the 64-bit call-gate.
- If the type field of the upper 64 bits of a 64-bit call gate is not 0.
- If an attempt is made to load a null selector in the SS register in compatibility mode.
- If an attempt is made to load null selector in the SS register in CPL3 and 64-bit mode.
- If an attempt is made to load a null selector in the SS register in non-CPL3 and 64-bit mode where RPL is not equal to CPL.
- If an attempt is made to clear CR0.PG while IA-32e mode is enabled.
- If an attempt is made to set a reserved bit in CR3, CR4 or CR8.

Interrupt 14—Page-Fault Exception (#PF)

Exception Class Fault.

Description

Indicates that, with paging enabled (the PG flag in the CR0 register is set), the processor detected one of the following conditions while using the page-translation mechanism to translate a linear address to a physical address:

- The P (present) flag in a page-directory or page-table entry needed for the address translation is clear, indicating that a page table or the page containing the operand is not present in physical memory.
- The procedure does not have sufficient privilege to access the indicated page (that is, a procedure running in user mode attempts to access a supervisor-mode page). If the SMAP flag is set in CR4, a page fault may also be triggered by code running in supervisor mode that tries to access data at a user-mode address. If either the PKE flag or the PKS flag is set in CR4, the protection-key rights registers may cause page faults on data accesses to linear addresses with certain protection keys.
- Code running in user mode attempts to write to a read-only page. If the WP flag is set in CR0, the page fault will also be triggered by code running in supervisor mode that tries to write to a read-only page.
- An instruction fetch to a linear address that translates to a physical address in a memory page with the execute-disable bit set (for information about the execute-disable bit, see Chapter 4, "Paging"). If the SMEP flag is set in CR4, a page fault will also be triggered by code running in supervisor mode that tries to fetch an instruction from a user-mode address.
- One or more reserved bits in paging-structure entry are set to 1. See description below of RSVD error code flag.
- A shadow-stack access is made to a page that is not a shadow-stack page. See Section 17.2, "Shadow Stacks" in the *Intel® 64 and IA-32 Architectures Software Developer's Manual, Volume 1* and Chapter 4.6, "Access Rights."
- An enclave access violates one of the specified access-control requirements. See Section 35.3, "Access-control Requirements" and Section 35.20, "Enclave Page Cache Map (EPCM)" in Chapter 35, "Enclave Access Control and Data Structures." In this case, the exception is called an **SGX-induced page fault**. The processor uses the error code (below) to distinguish SGX-induced page faults from ordinary page faults.

The exception handler can recover from page-not-present conditions and restart the program or task without any loss of program continuity. It can also restart the program or task after a privilege violation, but the problem that caused the privilege violation may be uncorrectable.

See also: Section 4.7, "Page-Fault Exceptions."

Exception Error Code

Yes (special format). The processor provides the page-fault handler with two items of information to aid in diagnosing the exception and recovering from it:

- An error code on the stack. The error code for a page fault has a format different from that for other exceptions (see Figure 6-11). The processor establishes the bits in the error code as follows:
  - P flag (bit 0).
    This flag is 0 if there is no translation for the linear address because the P flag was 0 in one of the paging-structure entries used to translate that address.
  - W/R (bit 1).
    If the access causing the page-fault exception was a write, this flag is 1; otherwise, it is 0. This flag describes the access causing the page-fault exception, not the access rights specified by paging.
  - U/S (bit 2).
    If a user-mode access caused the page-fault exception, this flag is 1; it is 0 if a supervisor-mode access did so. This flag describes the access causing the page-fault exception, not the access rights specified by paging.

— RSVD flag (bit 3).
This flag is 1 if there is no translation for the linear address because a reserved bit was set in one of the paging-structure entries used to translate that address.

— I/D flag (bit 4).
This flag is 1 if the access causing the page-fault exception was an instruction fetch. This flag describes the access causing the page-fault exception, not the access rights specified by paging.

— PK flag (bit 5).
This flag is 1 if the access causing the page-fault exception was a data access to a linear address with a protection key for which the protection-key rights registers disallow access.

— SS (bit 6).
If the access causing the page-fault exception was a shadow-stack access (including shadow-stack accesses in enclave mode), this flag is 1; otherwise, it is 0. This flag describes the access causing the page-fault exception, not the access rights specified by paging.

— HLAT (bit 7).
This flag is 1 if there is no translation for the linear address using HLAT paging because, in one of the paging-structure entries used to translate that address, either the P flag was 0 or a reserved bit was set. An error code will set this flag only if it clears bit 0 or sets bit 3. This flag will not be set by a page fault resulting from a violation of access rights, nor for one encountered during ordinary paging, including the case in which there has been a restart of HLAT paging.

— SGX flag (bit 15).
This flag is 1 if the exception is unrelated to paging and resulted from violation of SGX-specific access-control requirements. Because such a violation can occur only if there is no ordinary page fault, this flag is set only if the P flag (bit 0) is 1 and the RSVD flag (bit 3) and the PK flag (bit 5) are both 0.

See Section 4.6, “Access Rights” and Section 4.7, “Page-Fault Exceptions” for more information about page-fault exceptions and the error codes that they produce.

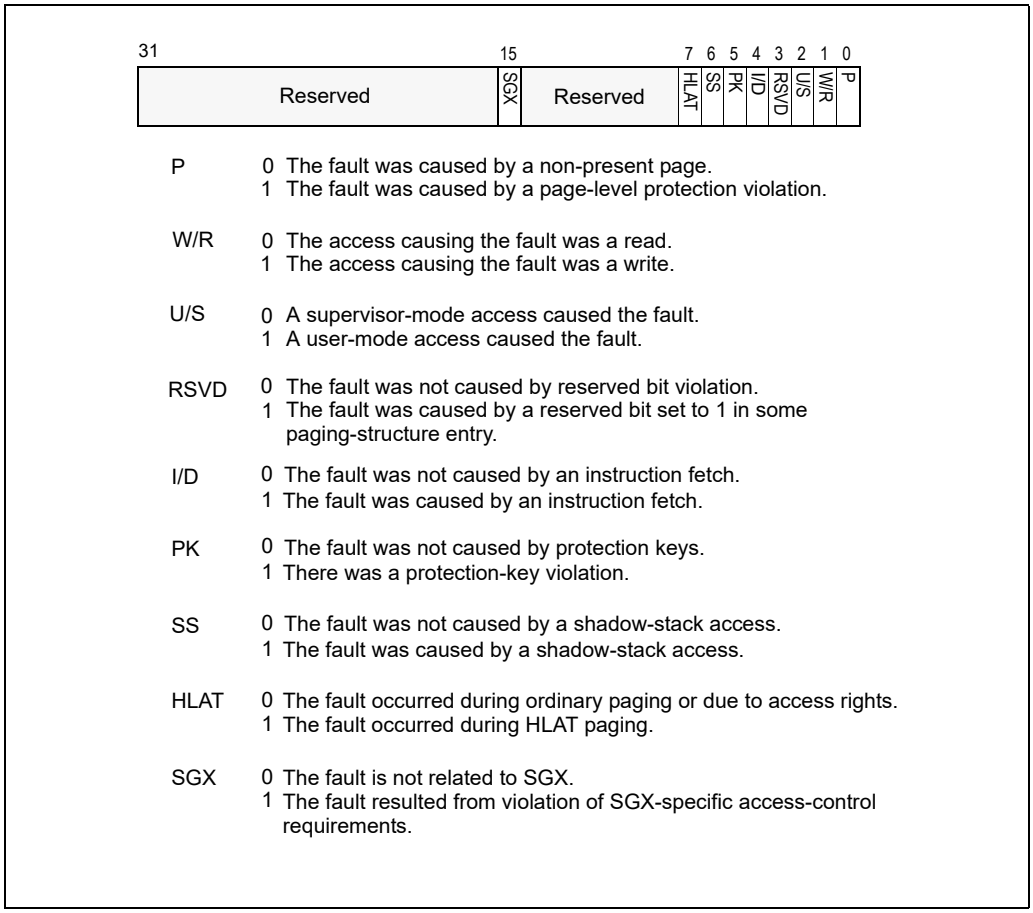

Figure 6-11. Page-Fault Error Code

- The contents of the CR2 register. The processor loads the CR2 register with the 32-bit linear address that generated the exception. The page-fault handler can use this address to locate the corresponding page directory and page-table entries. Another page fault can potentially occur during execution of the page-fault handler; the handler should save the contents of the CR2 register before a second page fault can occur.[1] If a page fault is caused by a page-level protection violation, the access flag in the page-directory entry is set when the fault occurs. The behavior of IA-32 processors regarding the access flag in the corresponding page-table entry is model specific and not architecturally defined.

Saved Instruction Pointer

The saved contents of CS and EIP registers generally point to the instruction that generated the exception. If the page-fault exception occurred during a task switch, the CS and EIP registers may point to the first instruction of the new task (as described in the following "Program State Change" section).

Program State Change

A program-state change does not normally accompany a page-fault exception, because the instruction that causes the exception to be generated is not executed. After the page-fault exception handler has corrected the violation (for example, loaded the missing page into memory), execution of the program or task can be resumed.

1. Processors update CR2 whenever a page fault is detected. If a second page fault occurs while an earlier page fault is being delivered, the faulting linear address of the second fault will overwrite the contents of CR2 (replacing the previous address). These updates to CR2 occur even if the page fault results in a double fault or occurs during the delivery of a double fault.

When a page-fault exception is generated during a task switch, the program-state may change, as follows. During a task switch, a page-fault exception can occur during any of following operations:

- While writing the state of the original task into the TSS of that task.
- While reading the GDT to locate the TSS descriptor of the new task.
- While reading the TSS of the new task.
- While reading segment descriptors associated with segment selectors from the new task.
- While reading the LDT of the new task to verify the segment registers stored in the new TSS.

In the last two cases the exception occurs in the context of the new task. The instruction pointer refers to the first instruction of the new task, not to the instruction which caused the task switch (or the last instruction to be executed, in the case of an interrupt). If the design of the operating system permits page faults to occur during task-switches, the page-fault handler should be called through a task gate.

If a page fault occurs during a task switch, the processor will load all the state information from the new TSS (without performing any additional limit, present, or type checks) before it generates the exception. The page-fault handler should thus not rely on being able to use the segment selectors found in the CS, SS, DS, ES, FS, and GS registers without causing another exception. (See the Program State Change description for "Interrupt 10—Invalid TSS Exception (#TS)" in this chapter for additional information on how to handle this situation.)

Additional Exception-Handling Information

Special care should be taken to ensure that an exception that occurs during an explicit stack switch does not cause the processor to use an invalid stack pointer (SS:ESP). Software written for 16-bit IA-32 processors often use a pair of instructions to change to a new stack, for example:

```
MOV SS, AX
MOV SP, StackTop
```

When executing this code on one of the 32-bit IA-32 processors, it is possible to get a page fault, general-protection fault (#GP), or alignment check fault (#AC) after the segment selector has been loaded into the SS register but before the ESP register has been loaded. At this point, the two parts of the stack pointer (SS and ESP) are inconsistent. The new stack segment is being used with the old stack pointer.

The processor does not use the inconsistent stack pointer if the exception handler switches to a well defined stack (that is, the handler is a task or a more privileged procedure). However, if the exception handler is called at the same privilege level and from the same task, the processor will attempt to use the inconsistent stack pointer.

In systems that handle page-fault, general-protection, or alignment check exceptions within the faulting task (with trap or interrupt gates), software executing at the same privilege level as the exception handler should initialize a new stack by using the LSS instruction rather than a pair of MOV instructions, as described earlier in this note. When the exception handler is running at privilege level 0 (the normal case), the problem is limited to procedures or tasks that run at privilege level 0, typically the kernel of the operating system.

Interrupt 16—x87 FPU Floating-Point Error (#MF)

Exception Class Fault.

Description

Indicates that the x87 FPU has detected a floating-point error. The NE flag in the register CR0 must be set for an interrupt 16 (floating-point error exception) to be generated. (See Section 2.5, "Control Registers," for a detailed description of the NE flag.)

NOTE

SIMD floating-point exceptions (#XM) are signaled through interrupt 19.

While executing x87 FPU instructions, the x87 FPU detects and reports six types of floating-point error conditions:

- Invalid operation (#I)
  - — Stack overflow or underflow (#IS)
  - — Invalid arithmetic operation (#IA)
- Divide-by-zero (#Z)
- Denormalized operand (#D)
- Numeric overflow (#O)
- Numeric underflow (#U)
- Inexact result (precision) (#P)

Each of these error conditions represents an x87 FPU exception type, and for each of exception type, the x87 FPU provides a flag in the x87 FPU status register and a mask bit in the x87 FPU control register. If the x87 FPU detects a floating-point error and the mask bit for the exception type is set, the x87 FPU handles the exception automatically by generating a predefined (default) response and continuing program execution. The default responses have been designed to provide a reasonable result for most floating-point applications.

If the mask for the exception is clear and the NE flag in register CR0 is set, the x87 FPU does the following:

1. Sets the necessary flag in the FPU status register.
2. Waits until the next "waiting" x87 FPU instruction or WAIT/FWAIT instruction is encountered in the program's instruction stream.
3. Generates an internal error signal that cause the processor to generate a floating-point exception (#MF).

Prior to executing a waiting x87 FPU instruction or the WAIT/FWAIT instruction, the x87 FPU checks for pending x87 FPU floating-point exceptions (as described in step 2 above). Pending x87 FPU floating-point exceptions are ignored for "non-waiting" x87 FPU instructions, which include the FNINIT, FNCLEX, FNSTSW, FNSTSW AX, FNSTCW, FNSTENV, and FNSAVE instructions. Pending x87 FPU exceptions are also ignored when executing the state management instructions FXSAVE and FXRSTOR.

All of the x87 FPU floating-point error conditions can be recovered from. The x87 FPU floating-point-error exception handler can determine the error condition that caused the exception from the settings of the flags in the x87 FPU status word. See "Software Exception Handling" in Chapter 8 of the *Intel® 64 and IA-32 Architectures Software Developer's Manual, Volume 1*, for more information on handling x87 FPU floating-point exceptions.

Exception Error Code

None. The x87 FPU provides its own error information.

Saved Instruction Pointer

The saved contents of CS and EIP registers point to the floating-point or WAIT/FWAIT instruction that was about to be executed when the floating-point-error exception was generated. This is not the faulting instruction in which the error condition was detected. The address of the faulting instruction is contained in the x87 FPU instruction pointer

register. See Section 8.1.8, "x87 FPU Instruction and Data (Operand) Pointers" in Chapter 8 of the *Intel® 64 and IA-32 Architectures Software Developer's Manual, Volume 1*, for more information about information the FPU saves for use in handling floating-point-error exceptions.

Program State Change

A program-state change generally accompanies an x87 FPU floating-point exception because the handling of the exception is delayed until the next waiting x87 FPU floating-point or WAIT/FWAIT instruction following the faulting instruction. The x87 FPU, however, saves sufficient information about the error condition to allow recovery from the error and re-execution of the faulting instruction if needed.

In situations where non- x87 FPU floating-point instructions depend on the results of an x87 FPU floating-point instruction, a WAIT or FWAIT instruction can be inserted in front of a dependent instruction to force a pending x87 FPU floating-point exception to be handled before the dependent instruction is executed. See "x87 FPU Exception Synchronization" in Chapter 8 of the *Intel® 64 and IA-32 Architectures Software Developer's Manual, Volume 1*, for more information about synchronization of x87 floating-point-error exceptions.

Interrupt 17—Alignment Check Exception (#AC)

Exception Class Fault.

Description

Indicates that the processor detected an unaligned memory operand when alignment checking was enabled. Alignment checks are only carried out in data (or stack) accesses (not in code fetches or system segment accesses). An example of an alignment-check violation is a word stored at an odd byte address, or a doubleword stored at an address that is not an integer multiple of 4. Table 6-7 lists the alignment requirements various data types recognized by the processor.

Table 6-7. Alignment Requirements by Data Type

Data Type	Address Must Be Divisible By
Word	2
Doubleword	4
Single precision floating-point (32-bits)	4
Double precision floating-point (64-bits)	8
Double extended precision floating-point (80-bits)	8
Quadword	8
Double quadword	16
Segment Selector	2
32-bit Far Pointer	2
48-bit Far Pointer	4
32-bit Pointer	4
GDTR, IDTR, LDTR, or Task Register Contents	4
FSTENV/FLDENV Save Area	4 or 2, depending on operand size
FSAVE/FRSTOR Save Area	4 or 2, depending on operand size
Bit String	2 or 4 depending on the operand-size attribute.

Note that the alignment check exception (#AC) is generated only for data types that must be aligned on word, doubleword, and quadword boundaries. A general-protection exception (#GP) is generated 128-bit data types that are not aligned on a 16-byte boundary.

To enable alignment checking, the following conditions must be true:

- AM flag in CR0 register is set.
- AC flag in the EFLAGS register is set.
- The CPL is 3 (including virtual-8086 mode).

Alignment-check exceptions (#AC) are generated only when operating at privilege level 3 (user mode). Memory references that default to privilege level 0, such as segment descriptor loads, do not generate alignment-check exceptions, even when caused by a memory reference made from privilege level 3.

Storing the contents of the GDTR, IDTR, LDTR, or task register in memory while at privilege level 3 can generate an alignment-check exception. Although application programs do not normally store these registers, the fault can be avoided by aligning the information stored on an even word-address.

The FXSAVE/XSAVE and FXRSTOR/XRSTOR instructions save and restore a 512-byte data structure, the first byte of which must be aligned on a 16-byte boundary. If the alignment-check exception (#AC) is enabled when executing these instructions (and CPL is 3), a misaligned memory operand can cause either an alignment-check exception or a general-protection exception (#GP) depending on the processor implementation (see "FXSAVE-Save x87 FPU, MMX, SSE, and SSE2 State" and "FXRSTOR-Restore x87 FPU, MMX, SSE, and SSE2 State" in Chapter 3

of the *Intel® 64 and IA-32 Architectures Software Developer's Manual, Volume 2A*; see "*XSAVE—Save Processor Extended States*" and "*XRSTOR—Restore Processor Extended States*" in Chapter 6 of the *Intel® 64 and IA-32 Architectures Software Developer's Manual, Volume 2D*).

The MOVDQU, MOVUPS, and MOVUPD instructions perform 128-bit unaligned loads or stores. The LDDQU instructions loads 128-bit unaligned data. They do not generate general-protection exceptions (#GP) when operands are not aligned on a 16-byte boundary. If alignment checking is enabled, alignment-check exceptions (#AC) may or may not be generated depending on processor implementation when data addresses are not aligned on an 8-byte boundary.

FSAVE and FRSTOR instructions can generate unaligned references, which can cause alignment-check faults. These instructions are rarely needed by application programs.

Exception Error Code

Yes. The error code is null; all bits are clear except possibly bit 0 — EXT; see Section 6.13. EXT is set if the #AC is recognized during delivery of an event other than a software interrupt (see "INT n/INTO/INT3/INT1—Call to Interrupt Procedure" in Chapter 3 of the *Intel® 64 and IA-32 Architectures Software Developer's Manual, Volume 2A)*.

Saved Instruction Pointer

The saved contents of CS and EIP registers point to the instruction that generated the exception.

Program State Change

A program-state change does not accompany an alignment-check fault, because the instruction is not executed.

Interrupt 18—Machine-Check Exception (#MC)

Exception Class Abort.

Description

Indicates that the processor detected an internal machine error or a bus error, or that an external agent detected a bus error. The machine-check exception is model-specific, available on the Pentium and later generations of processors. The implementation of the machine-check exception is different between different processor families, and these implementations may not be compatible with future Intel 64 or IA-32 processors. (Use the CPUID instruction to determine whether this feature is present.)

Bus errors detected by external agents are signaled to the processor on dedicated pins: the BINIT# and MCERR# pins on the Pentium 4, Intel Xeon, and P6 family processors and the BUSCHK# pin on the Pentium processor. When one of these pins is enabled, asserting the pin causes error information to be loaded into machine-check registers and a machine-check exception is generated.

The machine-check exception and machine-check architecture are discussed in detail in Chapter 16, "Machine-Check Architecture." Also, see the data books for the individual processors for processor-specific hardware information.

Exception Error Code

None. Error information is provided by machine-check MSRs.

Saved Instruction Pointer

For the Pentium 4 and Intel Xeon processors, the saved contents of extended machine-check state registers are directly associated with the error that caused the machine-check exception to be generated (see Section 16.3.1.2, "IA32_MCG_STATUS MSR," and Section 16.3.2.6, "IA32_MCG Extended Machine Check State MSRs").

For the P6 family processors, if the EIPV flag in the MCG_STATUS MSR is set, the saved contents of CS and EIP registers are directly associated with the error that caused the machine-check exception to be generated; if the flag is clear, the saved instruction pointer may not be associated with the error (see Section 16.3.1.2, "IA32_MCG_STATUS MSR").

For the Pentium processor, contents of the CS and EIP registers may not be associated with the error.

Program State Change

The machine-check mechanism is enabled by setting the MCE flag in control register CR4.

For the Pentium 4, Intel Xeon, P6 family, and Pentium processors, a program-state change always accompanies a machine-check exception, and an abort class exception is generated. For abort exceptions, information about the exception can be collected from the machine-check MSRs, but the program cannot generally be restarted.

If the machine-check mechanism is not enabled (the MCE flag in control register CR4 is clear), a machine-check exception causes the processor to enter the shutdown state.

Interrupt 19—SIMD Floating-Point Exception (#XM)

Exception Class Fault.

Description

Indicates the processor has detected an SSE/SSE2/SSE3 SIMD floating-point exception. The appropriate status flag in the MXCSR register must be set and the particular exception unmasked for this interrupt to be generated.

There are six classes of numeric exception conditions that can occur while executing an SSE/ SSE2/SSE3 SIMD floating-point instruction:

- Invalid operation (#I)
- Divide-by-zero (#Z)
- Denormal operand (#D)
- Numeric overflow (#O)
- Numeric underflow (#U)
- Inexact result (Precision) (#P)

The invalid operation, divide-by-zero, and denormal-operand exceptions are pre-computation exceptions; that is, they are detected before any arithmetic operation occurs. The numeric underflow, numeric overflow, and inexact result exceptions are post-computational exceptions.

See "SIMD Floating-Point Exceptions" in Chapter 11 of the *Intel® 64 and IA-32 Architectures Software Developer's Manual, Volume 1*, for additional information about the SIMD floating-point exception classes.

When a SIMD floating-point exception occurs, the processor does either of the following things:

- It handles the exception automatically by producing the most reasonable result and allowing program execution to continue undisturbed. This is the response to masked exceptions.
- It generates a SIMD floating-point exception, which in turn invokes a software exception handler. This is the response to unmasked exceptions.

Each of the six SIMD floating-point exception conditions has a corresponding flag bit and mask bit in the MXCSR register. If an exception is masked (the corresponding mask bit in the MXCSR register is set), the processor takes an appropriate automatic default action and continues with the computation. If the exception is unmasked (the corresponding mask bit is clear) and the operating system supports SIMD floating-point exceptions (the OSXMMEXCPT flag in control register CR4 is set), a software exception handler is invoked through a SIMD floating-point exception. If the exception is unmasked and the OSXMMEXCPT bit is clear (indicating that the operating system does not support unmasked SIMD floating-point exceptions), an invalid opcode exception (#UD) is signaled instead of a SIMD floating-point exception.

Note that because SIMD floating-point exceptions are precise and occur immediately, the situation does not arise where an x87 FPU instruction, a WAIT/FWAIT instruction, or another SSE/SSE2/SSE3 instruction will catch a pending unmasked SIMD floating-point exception.

In situations where a SIMD floating-point exception occurred while the SIMD floating-point exceptions were masked (causing the corresponding exception flag to be set) and the SIMD floating-point exception was subsequently unmasked, then no exception is generated when the exception is unmasked.

When SSE/SSE2/SSE3 SIMD floating-point instructions operate on packed operands (made up of two or four sub-operands), multiple SIMD floating-point exception conditions may be detected. If no more than one exception condition is detected for one or more sets of sub-operands, the exception flags are set for each exception condition detected. For example, an invalid exception detected for one sub-operand will not prevent the reporting of a divide-by-zero exception for another sub-operand. However, when two or more exceptions conditions are generated for one sub-operand, only one exception condition is reported, according to the precedences shown in Table 6-8. This exception precedence sometimes results in the higher priority exception condition being reported and the lower priority exception conditions being ignored.

Table 6-8. SIMD Floating-Point Exceptions Priority

Priority	Description
1 (Highest)	Invalid operation exception due to SNaN operand (or any NaN operand for maximum, minimum, or certain compare and convert operations).
2	QNaN operand[1].
3	Any other invalid operation exception not mentioned above or a divide-by-zero exception[2].
4	Denormal operand exception[2].
5	Numeric overflow and underflow exceptions possibly in conjunction with the inexact result exception[2].
6 (Lowest)	Inexact result exception.

NOTES:

1. Though a QNaN this is not an exception, the handling of a QNaN operand has precedence over lower priority exceptions. For example, a QNaN divided by zero results in a QNaN, not a divide-by-zero- exception.
2. If masked, then instruction execution continues, and a lower priority exception can occur as well.

Exception Error Code

None.

Saved Instruction Pointer

The saved contents of CS and EIP registers point to the SSE/SSE2/SSE3 instruction that was executed when the SIMD floating-point exception was generated. This is the faulting instruction in which the error condition was detected.

Program State Change

A program-state change does not accompany a SIMD floating-point exception because the handling of the exception is immediate unless the particular exception is masked. The available state information is often sufficient to allow recovery from the error and re-execution of the faulting instruction if needed.

Interrupt 20—Virtualization Exception (#VE)

Exception Class Fault.

Description

Indicates that the processor detected an EPT violation in VMX non-root operation. Not all EPT violations cause virtualization exceptions. See Section 26.5.7.2 for details.

The exception handler can recover from EPT violations and restart the program or task without any loss of program continuity. In some cases, however, the problem that caused the EPT violation may be uncorrectable.

Exception Error Code

None.

Saved Instruction Pointer

The saved contents of CS and EIP registers generally point to the instruction that generated the exception.

Program State Change

A program-state change does not normally accompany a virtualization exception, because the instruction that causes the exception to be generated is not executed. After the virtualization exception handler has corrected the violation (for example, by executing the EPTP-switching VM function), execution of the program or task can be resumed.

Additional Exception-Handling Information

The processor saves information about virtualization exceptions in the virtualization-exception information area. See Section 26.5.7.2 for details.

Interrupt 21—Control Protection Exception (#CP)

Exception Class Fault.

Description

Indicates a control flow transfer attempt violated the control flow enforcement technology constraints.

Exception Error Code

Yes (special format). The processor provides the control protection exception handler with following information through the error code on the stack.

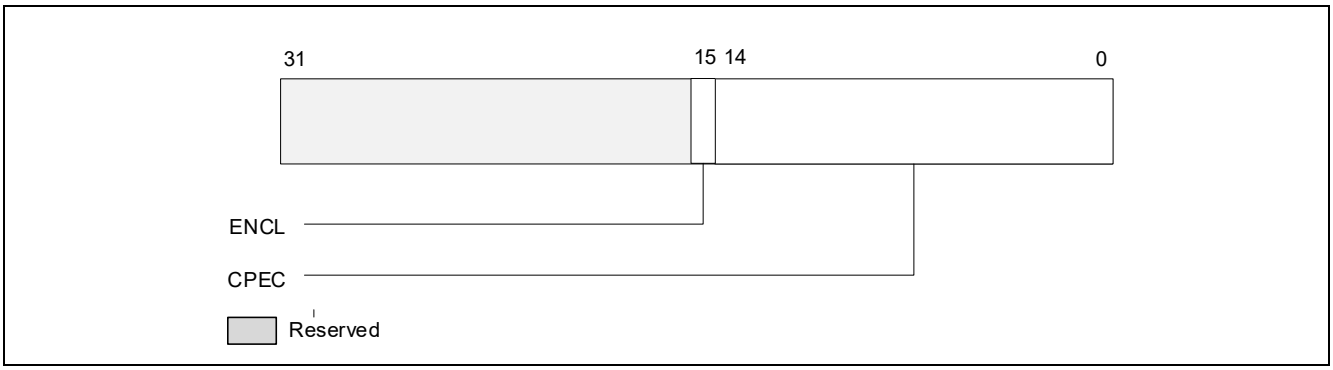

Figure 6-12. Exception Error Code Information

- Bit 14:0 - CPEC
  - 1 - NEAR-RET: Indicates the #CP was caused by a near RET instruction.
  - 2 - FAR-RET/IRET: Indicates the #CP was caused by a FAR RET or IRET instruction.
  - 3 - ENDBRANCH: indicates the #CP was due to missing ENDBRANCH at target of an indirect call or jump instruction.
  - 4 - RSTORSSP: Indicates the #CP was caused by a shadow-stack-restore token check failure in the RSTORSSP instruction.
  - 5- SETSSBSY: Indicates #CP was caused by a supervisor shadow stack token check failure in the SETSSBSY instruction.
- Bit 15 (ENCL) of the error code, if set to 1, indicates the #CP occurred during enclave execution.

Saved Instruction Pointer

The saved contents of the CS and EIP registers generally point to the instruction that generated the exception.

Program State Change

A program-state change does not normally accompany a control protection exception, because the instruction that causes the exception to be generated is not executed.

When a control protection exception is generated during a task switch, the program-state may change as follows. During a task switch, a control protection exception can occur during any of following operations:

- If task switch is initiated by IRET, CS and LIP stored on old task shadow stack do not match CS and LIP of new task (where LIP is the linear address of the return address).
- If task switch is initiated by IRET and SSP of new task loaded from shadow stack of old task (if new task CPL is < 3), OR the SSP from IA32_PL3_SSP (if new task CPL = 3) is not aligned to 4 bytes or is a value beyond 4GB.

In these cases the exception occurs in the context of the new task. The instruction pointer refers to the first instruction of the new task, not to the instruction which caused the task switch (or the last instruction to be executed, in the case of an interrupt). If the design of the operating system permits control protection faults to occur during task-switches, the control protection fault handler should be called through a task gate.

Interrupts 32 to 255—User Defined Interrupts

Exception Class Not applicable.

Description

Indicates that the processor did one of the following things:

- Executed an INT *n* instruction where the instruction operand is one of the vector numbers from 32 through 255.
- Responded to an interrupt request at the INTR pin or from the local APIC when the interrupt vector number associated with the request is from 32 through 255.

Exception Error Code

Not applicable.

Saved Instruction Pointer

The saved contents of CS and EIP registers point to the instruction that follows the INT *n* instruction or instruction following the instruction on which the INTR signal occurred.

Program State Change

A program-state change does not accompany interrupts generated by the INT *n* instruction or the INTR signal. The INT *n* instruction generates the interrupt within the instruction stream. When the processor receives an INTR signal, it commits all state changes for all previous instructions before it responds to the interrupt; so, program execution can resume upon returning from the interrupt handler.

CHAPTER 7
USER INTERRUPTS

7.1 INTRODUCTION

This chapter provides details of an architectural feature called **user interrupts**.

This feature defines user interrupts as new events in the architecture. User interrupts are delivered to software operating in 64-bit mode with CPL = 3 without any change to segmentation state. An individual user interrupt is identified by a 6-bit user-interrupt vector, which is pushed on the stack as part of user-interrupt delivery. The UIRET (user-interrupt return) instruction reverses user-interrupt delivery.

System software configures the user-interrupt architecture with MSRs. An operating system (OS) may update the content of some of these MSRs when switching between OS-managed threads.

One of these MSRs references a data structure called the **user posted-interrupt descriptor (UPID)**. User interrupts for an OS-managed thread can be posted in the UPID associated with that thread. Such user interrupts will be delivered after receipt of an ordinary interrupt (identified in the UPID) called a **user-interrupt notification**.[1]

System software can define operations to post user interrupts and to send user-interrupt notifications. In addition, the user-interrupt feature defines the SENDUIPI instruction, by which application software can send interprocessor user interrupts (user IPIs). An execution of SENDUIPI posts a user interrupt in a UPID and may send a user-interrupt notification.

(Platforms may include mechanisms to process external interrupts as either ordinary interrupts or user interrupts. Those processed as user interrupts would be posted in UPIDs and may result in user-interrupt notifications. Specifics of such mechanisms are outside of the scope of this manual.)

Section 7.2 explains how a processor enumerates support for user interrupts and how they are enabled by system software. Section 7.3 identifies the new processor state defined for user interrupts. Section 7.4 explains how a processor identifies and delivers user interrupts. Section 7.5 describes how a processor identifies and processes user-interrupt notifications. Section 7.6 enumerates new instructions that support management of user interrupts. Section 7.7 defines new support for user inter-processor interrupts (user IPIs).

7.2 ENUMERATION AND ENABLING

Software enables user interrupts by setting bit 25 (UINTR) in control register CR4. Setting CR4.UINTR enables user-interrupt delivery (Section 7.4.2), user-interrupt notification identification (Section 7.5.1), and the user-interrupt instructions (Section 7.6). It does not affect the accessibility of the user-interrupt MSRs (Section 7.3) by RDMSR, WRMSR or the XSAVE feature set.

Processor support for user interrupts is enumerated by CPUID.(EAX=7,ECX=0):EDX[5]. If this bit is set, software can set CR4.UINTR to 1 and can access the user-interrupt MSRs using RDMSR and WRMSR (see Section 7.3).

The user-interrupt feature is XSAVE-managed (see Section 13.5). This implies that aspects of the feature are enumerated as part of enumeration of the XSAVE feature set. See Section 13.5.11 for details.

7.3 USER-INTERRUPT STATE AND USER-INTERRUPT MSRS

The user-interrupt architecture defines the following new state. Some of this state can be accessed via the RDMSR and WRMSR instructions (through new user-interrupt MSRs detailed in Section 7.3.2) and some can be accessed using instructions described in Section 7.6.

1. For clarity, this chapter uses the term **ordinary interrupts** to refer to those events in the existing interrupt architecture, which are typically delivered to system software operating with CPL = 0.

7.3.1 User-Interrupt State

The following are the elements of the user-interrupt state (listed here independent of how they are accessed):

- **UIRR: user-interrupt request register.**

  This value includes one bit for each of the 64 user-interrupt vectors. If UIRR[i] = 1, a user interrupt with vector i is requesting service. The notation **UIRRV** is used to refer to the position of the most significant bit set in UIRR; if UIRR = 0, UIRRV = 0.

- **UIF: user-interrupt flag.**

  If UIF = 0, user-interrupt delivery is blocked; if UIF = 1, user interrupts may be delivered. User-interrupt delivery clears UIF, and the new UIRET instruction sets it. Section 7.6 defines other instructions for accessing UIF.

- **UIHANDLER: user-interrupt handler.**

  This is the linear address of the user-interrupt handler. User-interrupt delivery loads this address into RIP.

- **UISTACKADJUST: user-interrupt stack adjustment.**

  This value controls adjustment to the stack pointer (RSP) prior to user-interrupt delivery. It can be configured to load RSP with an alternate stack pointer or configured to prevent user-interrupt delivery from overwriting data above the current stack top.

  The value UISTACKADJUST must be canonical. If bit 0 is 1, user-interrupt delivery loads RSP with UISTACKADJUST; otherwise, it subtracts UISTACKADJUST from RSP. Either way, user-interrupt delivery then aligns RSP to a 16-byte boundary. See Section 7.4.2 for details.

- **UINV: user-interrupt notification vector.**

  This is the vector of the ordinary interrupts that are treated as user-interrupt notifications (Section 7.5.1). When the logical processor receives user-interrupt notification, it processes the user interrupts in the user posted-interrupt descriptor (UPID) referenced by UPIDADDR (see below and Section 7.5.2).

- **UPIDADDR: user posted-interrupt descriptor address.**

  This is the linear address of the UPID that the logical processor consults upon receiving an ordinary interrupt with vector UINV.

- **UITTADDR: user-interrupt target table address.**

  This is the linear address of user-interrupt target table (UITT), which the logical processor consults when software executes the SENDUIPI instruction (see Section 7.7).

- **UITTSZ: user-interrupt target table size.**

  This value is the highest index of a valid entry in the UITT (see Section 7.7).

7.3.2 User-Interrupt MSRs

Some of the state elements identified in Section 7.3.1 can be accessed as user-interrupt MSRs using the RDMSR and WRMSR instructions:

- IA32_UINTR_RR MSR (MSR address 985H). This MSR is an interface to UIRR (64 bits).

  Following a WRMSR to this MSR, the logical processor recognizes a pending user interrupt if and only if some bit is set in the MSR.

- IA32_UINTR_HANDLER MSR (MSR address 986H). This MSR is an interface to the UIHANDLER address. This is a linear address that must be canonical relative to the maximum linear-address width supported by the processor.[1] WRMSR to this MSR causes a general-protection fault (#GP) if its source operand does not meet this requirement.

- IA32_UINTR_STACKADJUST MSR (MSR address 987H). This MSR is an interface to the UISTACKADJUST value. This value includes a linear address that must be canonical relative to the maximum linear-address width supported by the processor. WRMSR to this MSR causes a #GP if its source operand does not meet this requirement.

1. CPUID.80000008H:EAX[15:8] enumerates the maximum linear-address width supported by the processor.

Bit 0 of this MSR corresponds to UISTACKADJUST[0], which controls how user-interrupt delivery updates the stack pointer. WRMSR may set it to either 0 or 1.

- IA32_UINTR_MISC MSR (MSR address 988H). This MSR is an interface to the UITTSZ and UINV values. The MSR has the following format:
  - — Bits 31:0 are UITTSZ.
  - — Bits 39:32 are UINV.
  - — Bits 63:40 are reserved. WRMSR causes a #GP if it would set any of those bits (if EDX[31:8] ≠ 000000H).

  Because this MSR will share an 8-byte portion of the XSAVE area with UIF (see Section 13.5.11 of *Intel® 64 and IA-32 Architectures Software Developer's Manual, Volume 1*), bit 63 of the MSR will never be used and will always be reserved.
- IA32_UINTR_PD MSR (MSR address 989H). This MSR is an interface to the UPIDADDR address. This is a linear address that must be canonical relative to the maximum linear-address width supported by the processor. WRMSR to this MSR causes a #GP if its source operand does not meet this requirement.

  Bits 5:0 of this MSR are reserved. WRMSR causes a #GP if it would set any of those bits (if EAX[5:0] ≠ 000000b).
- IA32_UINTR_TT MSR (MSR address 98AH). This MSR is an interface to the UITTADDR address (in addition, bit 0 enables SENDUIPI).

  Bit 63:4 of this MSR holds the current value of UITTADDR. This a linear address that must be canonical relative to the maximum linear-address width supported by the processor. WRMSR to this MSR causes a #GP if its source operand does not meet this requirement.

  Bits 3:1 of this MSR are reserved. WRMSR causes a #GP if it would set any of those bits (if EAX[3:1] ≠ 000b).

  Bit 0 of this MSR determines whether the SENDUIPI instruction is enabled. WRMSR may set it to either 0 or 1.

7.4 EVALUATION AND DELIVERY OF USER INTERRUPTS

A processor determines whether there is a user interrupt to deliver based on UIRR. Section 7.4.1 describes this recognition of pending user interrupts. Once a logical processor has recognized a pending user interrupt, it will deliver it on a subsequent instruction boundary by causing a control-flow change asynchronous to software execution. Section 7.4.2 details this process of user-interrupt delivery.

7.4.1 User-Interrupt Recognition

There is a user interrupt pending whenever UIRR ≠ 0.

Any instruction or operation that modifies UIRR updates the logical processor's recognition of a pending user interrupt. The following instructions and operations may do this:

- WRMSR to the IA32_UINTR_RR MSR (Section 7.3).
- XRSTORS of the user-interrupt state component.
- User-interrupt delivery (Section 7.4.2).
- User-interrupt notification processing (Section 7.5.2).
- VMX transitions that load the IA32_UINTR_RR MSR.

Each of these instructions or operations results in recognition of a pending user interrupt if it completes with UIRR ≠ 0; if it completes with UIRR = 0, no pending user interrupt is recognized.

Once recognized, a pending user interrupt may be delivered to software; see Section 7.4.2.

7.4.2 User-Interrupt Delivery

If CR4.UINTR = 1 and a user interrupt has been recognized (see Section 7.4.1), it will be delivered at an instruction boundary when the following conditions all hold: (1) UIF = 1; (2) there is no blocking by MOV SS or by POP SS[1]; (3) CPL = 3; (4) IA32_EFER.LMA = CS.L = 1 (the logical processor is in 64-bit mode); and (5) software is not executing inside an enclave.

User-interrupt delivery has priority just below that of ordinary interrupts. It wakes a logical processor from the states entered using the TPAUSE and UMWAIT instructions[2]; it does not wake a logical processor in the shutdown state or in the wait-for-SIPI state.

User-interrupt delivery does not change CPL (it occurs entirely with CPL = 3). The following pseudocode details the behavior of user-interrupt delivery:

```
IF UIHANDLER is not canonical in current paging mode
      THEN #GP(0);
FI;
holdRSP := RSP;
IF UISTACKADJUST[0] = 1
      THEN RSP := UISTACKADJUST;
      ELSE RSP := RSP – UISTACKADJUST;
FI;
RSP := RSP & ~FH;                  // force the stack to be 16-byte aligned
Push holdRSP;
Push RFLAGS;
Push RIP;
Push UIRRV;                        // 64-bit push; upper 58 bits pushed as 0
IF shadow stack is enabled for CPL = 3
      THEN ShadowStackPush RIP;
FI;
IF end-branch is enabled for CPL = 3
      THEN IA32_U_CET.TRACKER := WAIT_FOR_ENDBRANCH;
FI;
UIRR[Vector] := 0;
IF UIRR = 0
      THEN cease recognition of any pending user interrupt;
FI;
UIF := 0;
RFLAGS.TF := 0;
RFLAGS.RF := 0;
RIP := UIHANDLER;
```

If UISTACKADJUST[0] = 0, user-interrupt delivery decrements RSP by UISTACKADJUST; otherwise, it loads RSP with UISTACKADJUST. In either case, user-interrupt delivery aligns RSP to a 16-byte boundary by clearing RSP[3:0].

User-interrupt delivery that occurs during transactional execution causes transactional execution to abort and a transition to a non-transactional execution. The transactional abort loads EAX as it would had it been due to an ordinary interrupt. User-interrupt delivery occurs after the transactional abort.

---

1. Execution of the STI instruction does not block delivery of user interrupts for one instruction as it does ordinary interrupts. If a user interrupt is delivered immediately following execution of a STI instruction, ordinary interrupts are not blocked after delivery of the user interrupt.
2. User-interrupt delivery occurs only if CPL = 3. Since the HLT and MWAIT instructions can be executed only if CPL = 0, a user interrupt can never be delivered when a logical processor is an activity state that was entered using one of those instructions.

The stack accesses performed by user-interrupt delivery may incur faults (page faults, or stack faults due to canonicality violations). Before such a fault is delivered, RSP is restored to its original value (memory locations above the top of the stack may have been written). If such a fault produces an error code that uses the EXT bit, that bit will be cleared to 0.

If a fault occurs during user-interrupt delivery, UIRR is not updated and UIF is not cleared and, as a result, the logical processor continues to recognize that a user interrupt is pending, and user-interrupt delivery will normally recur after the fault is handled.

If the shadow-stack feature of control-flow enforcement technology (CET) is enabled for CPL = 3, user-interrupt delivery pushes the return instruction pointer on the shadow stack. If indirect-branch-tracking feature of CET is enabled, user-interrupt delivery transitions the indirect branch tracker to the WAIT_FOR_ENDBRANCH state; an ENDBR64 instruction is expected as first instruction of the user-interrupt handler.

User-interrupt delivery can be tracked by Architectural Last Branch Records (LBRs), Intel® Processor Trace (Intel® PT), and Performance Monitoring. For both Intel PT and LBRs, user-interrupt delivery is recorded in precisely the same manner as ordinary interrupt delivery. Hence for LBRs, user interrupts fall into the OTHER_BRANCH category, which implies that IA32_LBR_CTL.OTHER_BRANCH[bit 22] must be set to record user-interrupt delivery, and that the IA32_LBR_x_INFO.BR_TYPE field will indicate OTHER_BRANCH for any recorded user interrupt. For Intel PT, control flow tracing must be enabled by setting IA32_RTIT_CTL.BranchEn[bit 13].

User-interrupt delivery will also increment performance counters for which counting BR_INST_RETIRED.FAR_BRANCH is enabled. Some implementations may have dedicated events for counting user-interrupt delivery; see processor-specific event lists at https://download.01.org/perfmon/index/.

7.5 USER-INTERRUPT NOTIFICATION IDENTIFICATION AND PROCESSING

User-interrupt posting is the process by which a platform agent (or software operating on a CPU) records user interrupts in a **user posted-interrupt descriptor** (UPID) in memory. The platform agent (or software) may send an ordinary interrupt (called a **user-interrupt notification**) to the logical processor on which the target of the user interrupt is operating.

Table 7-1 gives the format of a UPID.

Table 7-1. Format of User Posted-Interrupt Descriptor — UPID

Bit Position(s)	Name	Description
0	Outstanding notification	If this bit is set, there is a notification outstanding for one or more user interrupts in PIR.
1	Suppress notification	If this bit is set, agents (including SENDUIPI) should not send notifications when posting user interrupts in this descriptor.
15:2	Reserved	User-interrupt notification processing ignores these bits; must be zero for SENDUIPI.
23:16	Notification vector	Used by agents sending user-interrupt notifications (including SENDUIPI).
31:24	Reserved	User-interrupt notification processing ignores these bits; must be zero for SENDUIPI.
63:32	Notification destination	Target physical APIC ID – used by SENDUIPI. In xAPIC mode, bits 47:40 are the 8-bit APIC ID. In x2APIC mode, the entire field forms the 32-bit APIC ID.
127:64	Posted-interrupt requests (PIR)	One bit for each user-interrupt vector. There is a user-interrupt request for a vector if the corresponding bit is 1.

The notation **PIR** (posted-interrupt requests) refers to the 64 posted-interrupt requests in a UPID.

If an ordinary interrupt arrives while CR4.UINTR = IA32_EFER.LMA = 1, the logical processor determines whether the interrupt is a user-interrupt notification. This process is called **user-interrupt notification identification** and is described in Section 7.5.1.

Once a logical processor has identified a user-interrupt notification, it copies user interrupts in the UPID's PIR into UIRR. This process is called **user-interrupt notification processing** and is described in Section 7.5.2.

A logical processor is not interruptible during either user-interrupt notification identification or user-interrupt notification processing or between those operations (when they occur in succession).

7.5.1 User-Interrupt Notification Identification

If CR4.UINTR = IA32_EFER.LMA = 1, a logical processor performs user-interrupt notification identification when it receives an ordinary interrupt. The following algorithm describes the response by the processor to an ordinary maskable interrupt when CR4.UINTR = IA32_EFER.LMA = 1[1]:

1. The local APIC is acknowledged; this provides the processor core with an interrupt vector, V.
2. If V = UINV, the logical processor continues to the next step. Otherwise, an interrupt with vector V is delivered normally through the IDT; the remainder of this algorithm does not apply and user-interrupt notification processing does not occur.
3. The processor writes zero to the EOI register in the local APIC; this dismisses the interrupt with vector V = UINV from the local APIC.

User-interrupt notification identification involves acknowledgment of the local APIC and thus occurs only when ordinary interrupts are not masked.

If user-interrupt notification identification completes step #3, the logical processor then performs user-interrupt notification processing as described in Section 7.5.2.

An ordinary interrupt that occurs during transactional execution causes the transactional execution to abort and transition to a non-transactional execution. This occurs before user-interrupt notification identification.

An ordinary interrupt that occurs while software is executing inside an enclave causes an asynchronous enclave exit (AEX). This AEX occurs before user-interrupt notification identification.

7.5.2 User-Interrupt Notification Processing

Once a logical processor has identified a user-interrupt notification, it performs **user-interrupt notification processing** using the UPID at the linear address in the IA32_UINTR_PD MSR.

The following algorithm describes user-interrupt notification processing:

1. The logical processor clears the outstanding-notification bit (bit 0) in the UPID. This is done atomically so as to leave the remainder of the descriptor unmodified.
2. The logical processor reads PIR (bits 127:64 of the UPID) into a temporary register and writes all zeros to PIR. This is done atomically so as to ensure that each bit cleared in PIR is set in the temporary register.
3. If any bit is set in the temporary register, the logical processor sets in UIRR each bit corresponding to a bit set in the temporary register (e.g., with a logical OR) and recognizes a pending user interrupt (if it has not already done so).

The logical processor performs the steps above in an uninterruptible manner. Steps #1 and #2 may be combined into a single atomic step. If step #3 leads to recognition of a user interrupt, the processor may deliver that user interrupt on the following instruction boundary (see Section 7.4.2).

Although user-interrupt notification processing may occur at any privilege level, all of the memory accesses in steps #1 and #2 are performed with supervisor privilege.

Step #1 and step #2 each access the UPID using a linear address and may therefore incur faults (page faults, or general-protection faults due to canonicality violations). If such a fault produces an error code that uses the EXT bit, that bit will be set to 1.

If a fault occurs during user-interrupt notification processing, updates to architectural state performed by the earlier user-interrupt notification identification (Section 7.5.1) remain committed and are not undone; if such a fault occurs at step #2 (if it is not performed atomically with step #1), any update to architectural state performed by step #1 also remains committed. System software is advised to prevent such faults (e.g., by ensuring that no

1. If the interrupt arrives between iterations of a REP-prefixed string instruction, the processor first updates state as follows: RIP is loaded to reference the string instruction; RCX, RSI, and RDI are updated as appropriate to reflect the iterations completed; and RFLAGS.RF is set to 1.

page fault occurs and that the linear address in the IA32_UINTR_PD MSR is canonical with respect to the paging mode in use).

If the user-interrupt notification identification that precedes user-interrupt notification processing occurred due to an ordinary interrupt that arrived while the logical processor was in the HLT state, the logical processor returns to the HLT state following user-interrupt notification processing.

7.6 USER-INTERRUPT INSTRUCTIONS

The user-interrupt feature defines instructions for control-flow transfer and access to new state. UIRET is an instruction to effect a return from a user-interrupt handler. CLUI, STUI, and TESTUI allow software to access UIF. SENDUIPI sends a user IPI. See *Intel® 64 and IA-32 Architectures Software Developer's Manual, Volumes 2A, 2B, 2C & 2D* for details on the instructions' operation.

The following items provide high-level overviews of the instructions:

- UIRET pops from the stack the state saved by user-interrupt delivery (see Section 7.4.2) and loads those values into the corresponding registers (software should pop the user-interrupt vector from the stack before executing UIRET). Because RIP is one of those registers, UIRET effect a return to the that point from which the user interrupt was delivered.
- CLUI clears UIF.
- STUI sets UIF.
- TESTUI copies UIF to RFLAGS.CF.
- SENDUIPI is discussed in Section 7.7.

7.7 USER IPIS

The SENDUIPI instruction sends a user interprocessor interrupt (IPI). The instruction uses a data structure called the user-interrupt target table (UITT). This table is located at the linear address UITTADDR and it comprises UITTSZ+1 16-byte entries (the values UITTADDR and UITTSZ are defined in Section 7.3.1). SENDUIPI uses the UITT entry (UITTE) indexed by the instruction's register operand. Each UITTE has the following format:

- Bit 0: V, a valid bit.
- Bits 7:1 are reserved and must be 0.
- Bits 15:8: UV, the user-interrupt vector (in the range 0–63, so bits 15:14 must be 0).
- Bits 63:16 are reserved.
- Bits 127:64: UPIDADDR, the linear address of a UPID (64-byte aligned, so bits 69:64 must be 0).

SENDUIPI sends a user interrupt by posting a user interrupt with vector V in the UPID referenced by UPIDADDR and then sending, as an ordinary IPI, any notification interrupt specified in that UPID. Details appear in *Intel® 64 and IA-32 Architectures Software Developer's Manual, Volumes 2A, 2B, 2C & 2D*.

CHAPTER 8
TASK MANAGEMENT

This chapter describes the IA-32 architecture's task management facilities. These facilities are only available when the processor is running in protected mode.

This chapter focuses on 32-bit tasks and the 32-bit TSS structure. For information on 16-bit tasks and the 16-bit TSS structure, see Section 8.6, "16-Bit Task-State Segment (TSS)." For information specific to task management in 64-bit mode, see Section 8.7, "Task Management in 64-bit Mode."

8.1 TASK MANAGEMENT OVERVIEW

A task is a unit of work that a processor can dispatch, execute, and suspend. It can be used to execute a program, a task or process, an operating-system service utility, an interrupt or exception handler, or a kernel or executive utility.

The IA-32 architecture provides a mechanism for saving the state of a task, for dispatching tasks for execution, and for switching from one task to another. When operating in protected mode, all processor execution takes place from within a task. Even simple systems must define at least one task. More complex systems can use the processor's task management facilities to support multitasking applications.

8.1.1 Task Structure

A task is made up of two parts: a task execution space and a task-state segment (TSS). The task execution space consists of a code segment, a stack segment, and one or more data segments (see Figure 8-1). If an operating system or executive uses the processor's privilege-level protection mechanism, the task execution space also provides a separate stack for each privilege level.

The TSS specifies the segments that make up the task execution space and provides a storage place for task state information. In multitasking systems, the TSS also provides a mechanism for linking tasks.

A task is identified by the segment selector for its TSS. When a task is loaded into the processor for execution, the segment selector, base address, limit, and segment descriptor attributes for the TSS are loaded into the task register (see Section 2.4.4, "Task Register (TR)").

If paging is implemented for the task, the base address of the page directory used by the task is loaded into control register CR3.

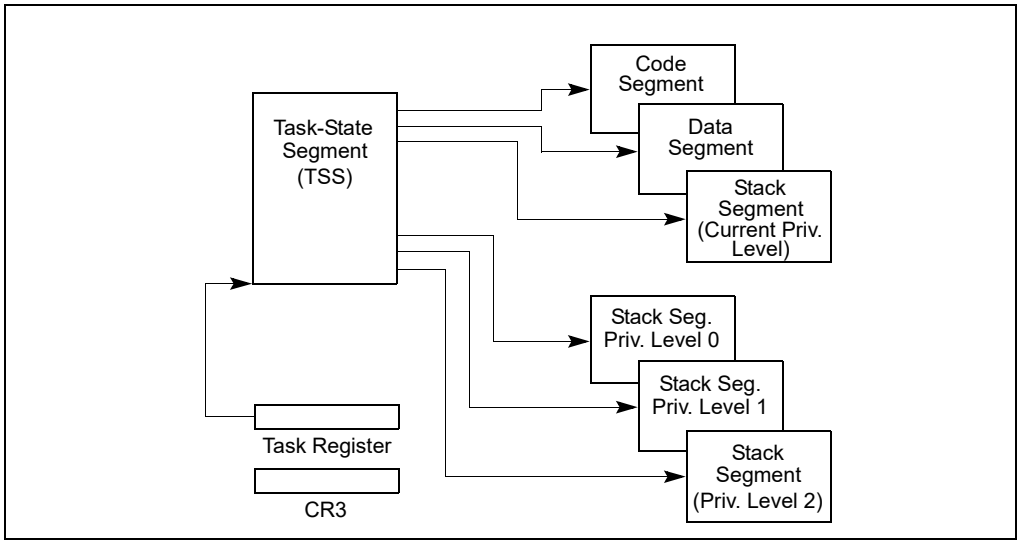

Figure 8-1. Structure of a Task

8.1.2 Task State

The following items define the state of the currently executing task:

- The task's current execution space, defined by the segment selectors in the segment registers (CS, DS, SS, ES, FS, and GS).
- The state of the general-purpose registers.
- The state of the EFLAGS register.
- The state of the EIP register.
- The state of control register CR3.
- The state of the task register.
- The state of the LDTR register.
- The I/O map base address and I/O map (contained in the TSS).
- Stack pointers to the privilege 0, 1, and 2 stacks (contained in the TSS).
- Link to previously executed task (contained in the TSS).
- The state of the shadow stack pointer (SSP).

Prior to dispatching a task, all of these items are contained in the task's TSS, except the state of the task register. Also, the complete contents of the LDTR register are not contained in the TSS, only the segment selector for the LDT.

8.1.3 Executing a Task

Software or the processor can dispatch a task for execution in one of the following ways:

- A explicit call to a task with the CALL instruction.
- A explicit jump to a task with the JMP instruction.
- An implicit call (by the processor) to an interrupt-handler task.
- An implicit call to an exception-handler task.
- A return (initiated with an IRET instruction) when the NT flag in the EFLAGS register is set.

All of these methods for dispatching a task identify the task to be dispatched with a segment selector that points to a task gate or the TSS for the task. When dispatching a task with a CALL or JMP instruction, the selector in the instruction may select the TSS directly or a task gate that holds the selector for the TSS. When dispatching a task

to handle an interrupt or exception, the IDT entry for the interrupt or exception must contain a task gate that holds the selector for the interrupt- or exception-handler TSS.

When a task is dispatched for execution, a task switch occurs between the currently running task and the dispatched task. During a task switch, the execution environment of the currently executing task (called the task's state or **context**) is saved in its TSS and execution of the task is suspended. The context for the dispatched task is then loaded into the processor and execution of that task begins with the instruction pointed to by the newly loaded EIP register. If the task has not been run since the system was last initialized, the EIP will point to the first instruction of the task's code; otherwise, it will point to the next instruction after the last instruction that the task executed when it was last active.

If the currently executing task (the calling task) called the task being dispatched (the called task), the TSS segment selector for the calling task is stored in the TSS of the called task to provide a link back to the calling task.

For all IA-32 processors, tasks are not recursive. A task cannot call or jump to itself.

Interrupts and exceptions can be handled with a task switch to a handler task. Here, the processor performs a task switch to handle the interrupt or exception and automatically switches back to the interrupted task upon returning from the interrupt-handler task or exception-handler task. This mechanism can also handle interrupts that occur during interrupt tasks.

As part of a task switch, the processor can also switch to another LDT, allowing each task to have a different logical-to-physical address mapping for LDT-based segments. The page-directory base register (CR3) also is reloaded on a task switch, allowing each task to have its own set of page tables. These protection facilities help isolate tasks and prevent them from interfering with one another.

If protection mechanisms are not used, the processor provides no protection between tasks. This is true even with operating systems that use multiple privilege levels for protection. A task running at privilege level 3 that uses the same LDT and page tables as other privilege-level-3 tasks can access code and corrupt data and the stack of other tasks.

Use of task management facilities for handling multitasking applications is optional. Multitasking can be handled in software, with each software defined task executed in the context of a single IA-32 architecture task.

If shadow stack is enabled, then the SSP of the task is located at the 4 bytes at offset 104 in the 32-bit TSS and is used by the processor to establish the SSP when a task switch occurs from a task associated with this TSS. Note that the processor does not write the SSP of the task initiating the task switch to the TSS of that task, and instead the SSP of the previous task is pushed onto the shadow stack of the new task.

8.2 TASK MANAGEMENT DATA STRUCTURES

The processor defines five data structures for handling task-related activities:

- Task-state segment (TSS).
- Task-gate descriptor.
- TSS descriptor.
- Task register.
- NT flag in the EFLAGS register.

When operating in protected mode, a TSS and TSS descriptor must be created for at least one task, and the segment selector for the TSS must be loaded into the task register (using the LTR instruction).

8.2.1 Task-State Segment (TSS)

The processor state information needed to restore a task is saved in a system segment called the task-state segment (TSS). Figure 8-2 shows the format of a TSS for tasks designed for 32-bit CPUs. The fields of a TSS are divided into two main categories: dynamic fields and static fields.

For information about 16-bit Intel 286 processor task structures, see Section 8.6, "16-Bit Task-State Segment (TSS)." For information about 64-bit mode task structures, see Section 8.7, "Task Management in 64-bit Mode."

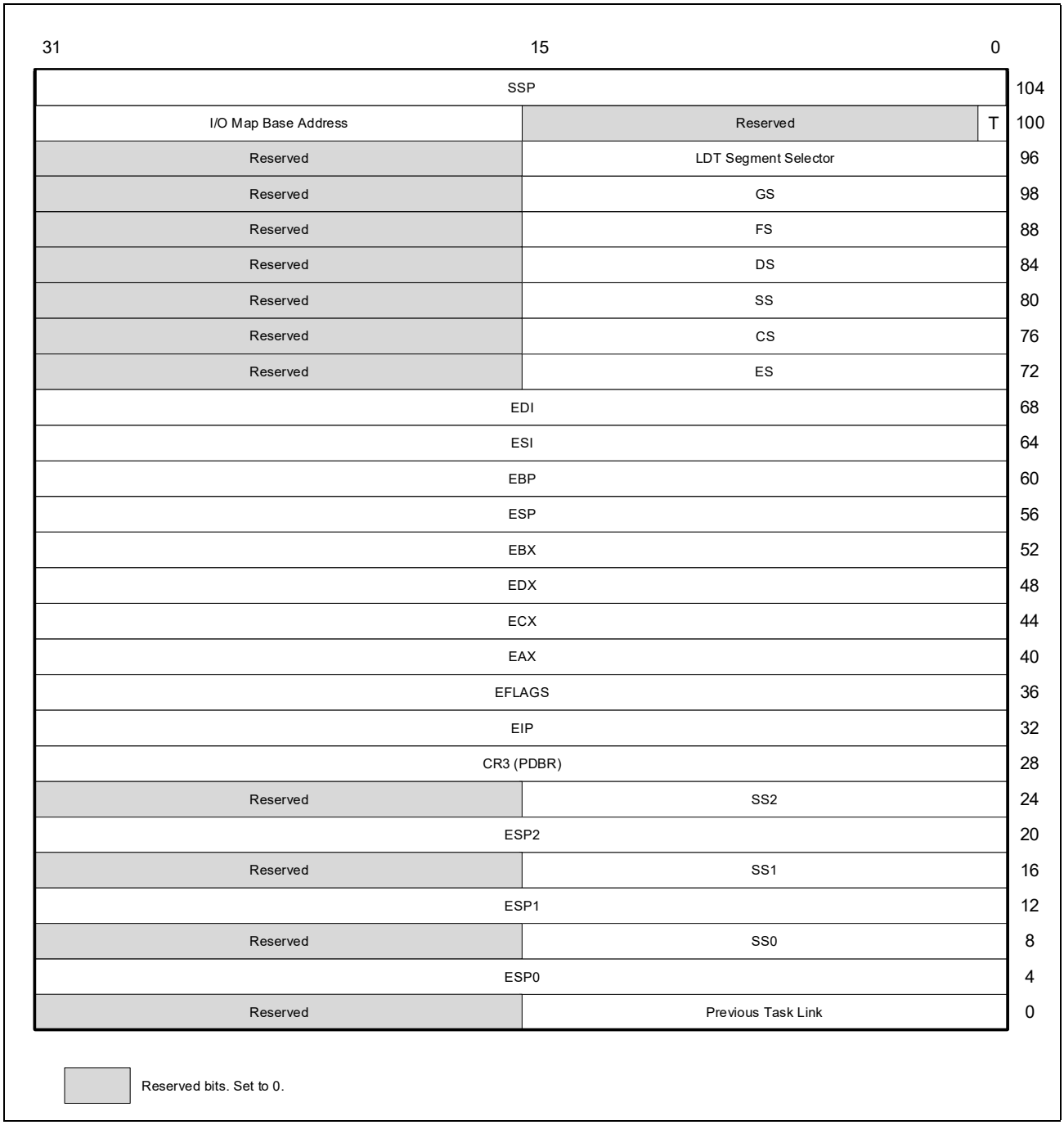

Figure 8-2. 32-Bit Task-State Segment (TSS)

The processor updates dynamic fields when a task is suspended during a task switch. The following are dynamic fields:

- **General-purpose register fields** — State of the EAX, ECX, EDX, EBX, ESP, EBP, ESI, and EDI registers prior to the task switch.
- **Segment selector fields** — Segment selectors stored in the ES, CS, SS, DS, FS, and GS registers prior to the task switch.
- **EFLAGS register field** — State of the EFLAGS register prior to the task switch.

- **EIP (instruction pointer) field** — State of the EIP register prior to the task switch.
- **Previous task link field** — Contains the segment selector for the TSS of the previous task (updated on a task switch that was initiated by a call, interrupt, or exception). This field (which is sometimes called the back link field) permits a task switch back to the previous task by using the IRET instruction.

The processor reads the static fields, but does not normally change them. These fields are set up when a task is created. The following are static fields:

- **LDT segment selector field** — Contains the segment selector for the task's LDT.
- **CR3 control register field** — Contains the base physical address of the page directory to be used by the task. Control register CR3 is also known as the page-directory base register (PDBR).
- **Privilege level-0, -1, and -2 stack pointer fields** — These stack pointers consist of a logical address made up of the segment selector for the stack segment (SS0, SS1, and SS2) and an offset into the stack (ESP0, ESP1, and ESP2). Note that the values in these fields are static for a particular task; whereas, the SS and ESP values will change if stack switching occurs within the task.
- **T (debug trap) flag (byte 100, bit 0)** — When set, the T flag causes the processor to raise a debug exception when a task switch to this task occurs (see Section 18.3.1.5, "Task-Switch Exception Condition").
- **I/O map base address field** — Contains a 16-bit offset from the base of the TSS to the I/O permission bit map and interrupt redirection bitmap. When present, these maps are stored in the TSS at higher addresses. The I/O map base address points to the beginning of the I/O permission bit map and the end of the interrupt redirection bit map. See Chapter 19, "Input/Output," in the *Intel® 64 and IA-32 Architectures Software Developer's Manual, Volume 1*, for more information about the I/O permission bit map. See Section 21.3, "Interrupt and Exception Handling in Virtual-8086 Mode," for a detailed description of the interrupt redirection bit map.
- **Shadow Stack Pointer (SSP)** — Contains task's shadow stack pointer. The shadow stack of the task should have a supervisor shadow stack token at the address pointed to by the task SSP (offset 104). This token will be verified and made busy when switching to that shadow stack using a CALL/JMP instruction, and made free when switching out of that task using an IRET instruction.

If paging is used:

- Pages corresponding to the previous task's TSS, the current task's TSS, and the descriptor table entries for each all should be marked as read/write.
- Task switches are carried out faster if the pages containing these structures are present in memory before the task switch is initiated.

8.2.2 TSS Descriptor

The TSS, like all other segments, is defined by a segment descriptor. Figure 8-3 shows the format of a TSS descriptor. TSS descriptors may only be placed in the GDT; they cannot be placed in an LDT or the IDT.

An attempt to access a TSS using a segment selector with its TI flag set (which indicates the current LDT) causes a general-protection exception (#GP) to be generated during CALLs and JMPs; it causes an invalid TSS exception (#TS) during IRETs. A general-protection exception is also generated if an attempt is made to load a segment selector for a TSS into a segment register.

The busy flag (B) in the type field indicates whether the task is busy. A busy task is currently running or suspended. A type field with a value of 1001B indicates an inactive task; a value of 1011B indicates a busy task. Tasks are not recursive. The processor uses the busy flag to detect an attempt to call a task whose execution has been interrupted. To ensure that there is only one busy flag is associated with a task, each TSS should have only one TSS descriptor that points to it.

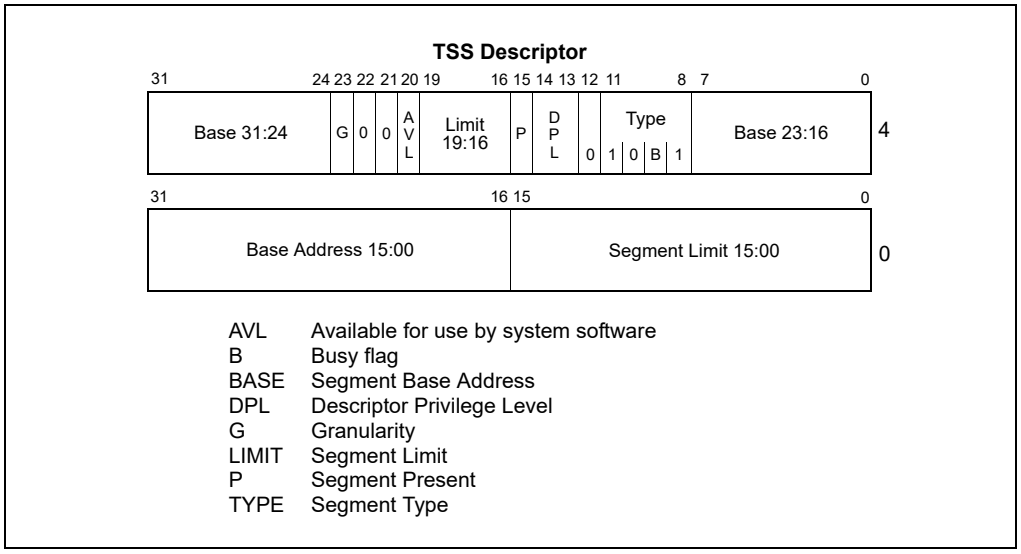

Figure 8-3. TSS Descriptor

The base, limit, and DPL fields and the granularity and present flags have functions similar to their use in data-segment descriptors (see Section 3.4.5, "Segment Descriptors"). When the G flag is 0 in a TSS descriptor for a 32-bit TSS, the limit field must have a value equal to or greater than 67H, one byte less than the minimum size of a TSS. Attempting to switch to a task whose TSS descriptor has a limit less than 67H generates an invalid-TSS exception (#TS). A larger limit is required if an I/O permission bit map is included or if the operating system stores additional data. The processor does not check for a limit greater than 67H on a task switch; however, it does check when accessing the I/O permission bit map or interrupt redirection bit map.

Any program or procedure with access to a TSS descriptor (that is, whose CPL is numerically equal to or less than the DPL of the TSS descriptor) can dispatch the task with a call or a jump.

In most systems, the DPLs of TSS descriptors are set to values less than 3, so that only privileged software can perform task switching. However, in multitasking applications, DPLs for some TSS descriptors may be set to 3 to allow task switching at the application (or user) privilege level.

8.2.3 TSS Descriptor in 64-bit mode

In 64-bit mode, task switching is not supported, but TSS descriptors still exist. The format of a 64-bit TSS is described in Section 8.7.

In 64-bit mode, the TSS descriptor is expanded to 16 bytes (see Figure 8-4). This expansion also applies to an LDT descriptor in 64-bit mode. Table 3-2 provides the encoding information for the segment type field.

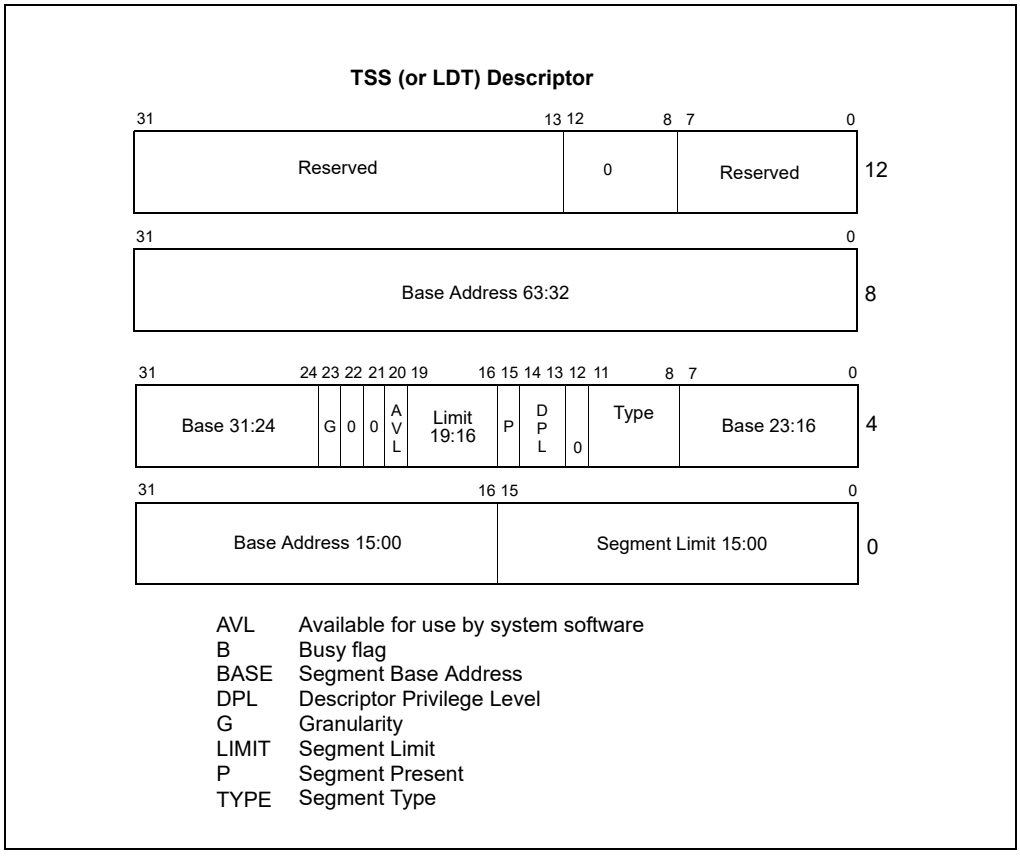

Figure 8-4. Format of TSS and LDT Descriptors in 64-bit Mode

8.2.4 Task Register

The task register holds the 16-bit segment selector and the entire segment descriptor (32-bit base address (64 bits in IA-32e mode), 16-bit segment limit, and descriptor attributes) for the TSS of the current task (see Figure 2-6). This information is copied from the TSS descriptor in the GDT for the current task. Figure 8-5 shows the path the processor uses to access the TSS (using the information in the task register).

The task register has a visible part (that can be read and changed by software) and an invisible part (maintained by the processor and is inaccessible by software). The segment selector in the visible portion points to a TSS descriptor in the GDT. The processor uses the invisible portion of the task register to cache the segment descriptor for the TSS. Caching these values in a register makes execution of the task more efficient. The LTR (load task register) and STR (store task register) instructions load and read the visible portion of the task register:

The LTR instruction loads a segment selector (source operand) into the task register that points to a TSS descriptor in the GDT. It then loads the invisible portion of the task register with information from the TSS descriptor. LTR is a privileged instruction that may be executed only when the CPL is 0. It's used during system initialization to put an initial value in the task register. Afterwards, the contents of the task register are changed implicitly when a task switch occurs.

The STR (store task register) instruction stores the visible portion of the task register in a general-purpose register or memory. This instruction can be executed by code running at any privilege level in order to identify the currently running task. However, it is normally used only by operating system software. (If CR4.UMIP = 1, STR can be executed only when CPL = 0.)

On power up or reset of the processor, segment selector and base address are set to the default value of 0; the limit is set to FFFFH.

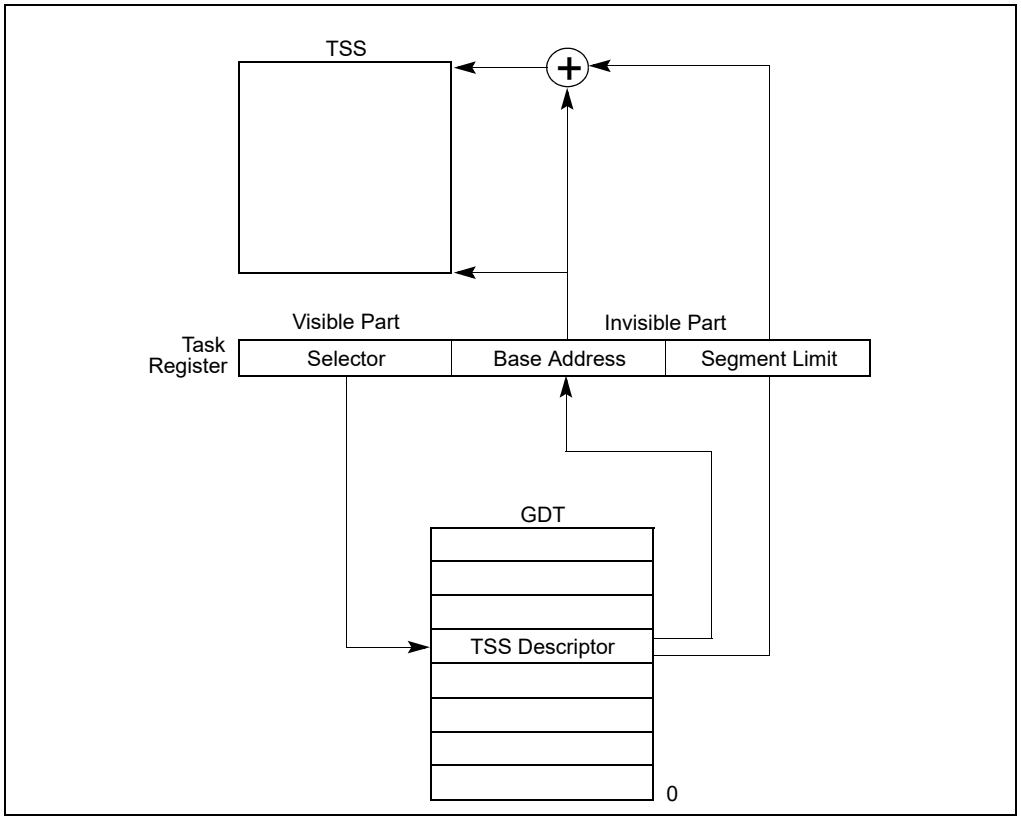

Figure 8-5. Task Register

8.2.5 Task-Gate Descriptor

A task-gate descriptor provides an indirect, protected reference to a task (see Figure 8-6). It can be placed in the GDT, an LDT, or the IDT. The TSS segment selector field in a task-gate descriptor points to a TSS descriptor in the GDT. The RPL in this segment selector is not used.

The DPL of a task-gate descriptor controls access to the TSS descriptor during a task switch. When a program or procedure makes a call or jump to a task through a task gate, the CPL and the RPL field of the gate selector pointing to the task gate must be less than or equal to the DPL of the task-gate descriptor. Note that when a task gate is used, the DPL of the destination TSS descriptor is not used.

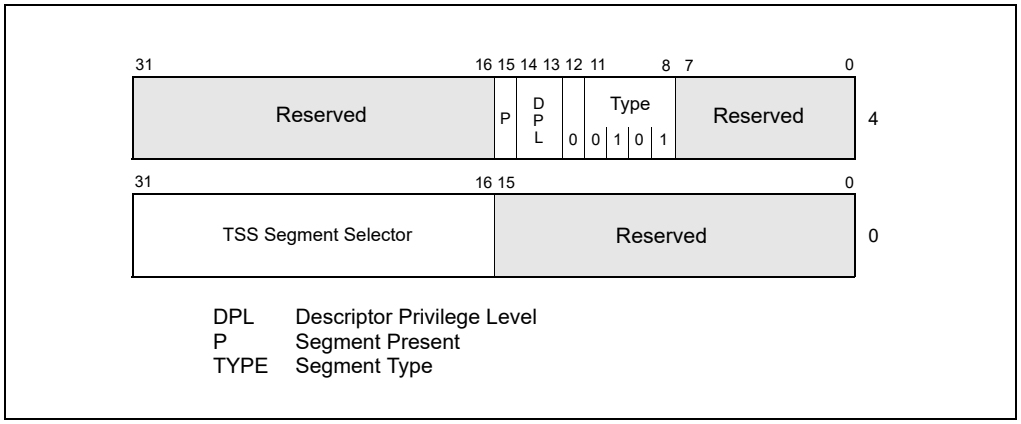

Figure 8-6. Task-Gate Descriptor

A task can be accessed either through a task-gate descriptor or a TSS descriptor. Both of these structures satisfy the following needs:

- **Need for a task to have only one busy fla**g — Because the busy flag for a task is stored in the TSS descriptor, each task should have only one TSS descriptor. There may, however, be several task gates that reference the same TSS descriptor.
- **Need to provide selective access to tasks** — Task gates fill this need, because they can reside in an LDT and can have a DPL that is different from the TSS descriptor's DPL. A program or procedure that does not have sufficient privilege to access the TSS descriptor for a task in the GDT (which usually has a DPL of 0) may be allowed access to the task through a task gate with a higher DPL. Task gates give the operating system greater latitude for limiting access to specific tasks.
- **Need for an interrupt or exception to be handled by an independent task** — Task gates may also reside in the IDT, which allows interrupts and exceptions to be handled by handler tasks. When an interrupt or exception vector points to a task gate, the processor switches to the specified task.

Figure 8-7 illustrates how a task gate in an LDT, a task gate in the GDT, and a task gate in the IDT can all point to the same task.

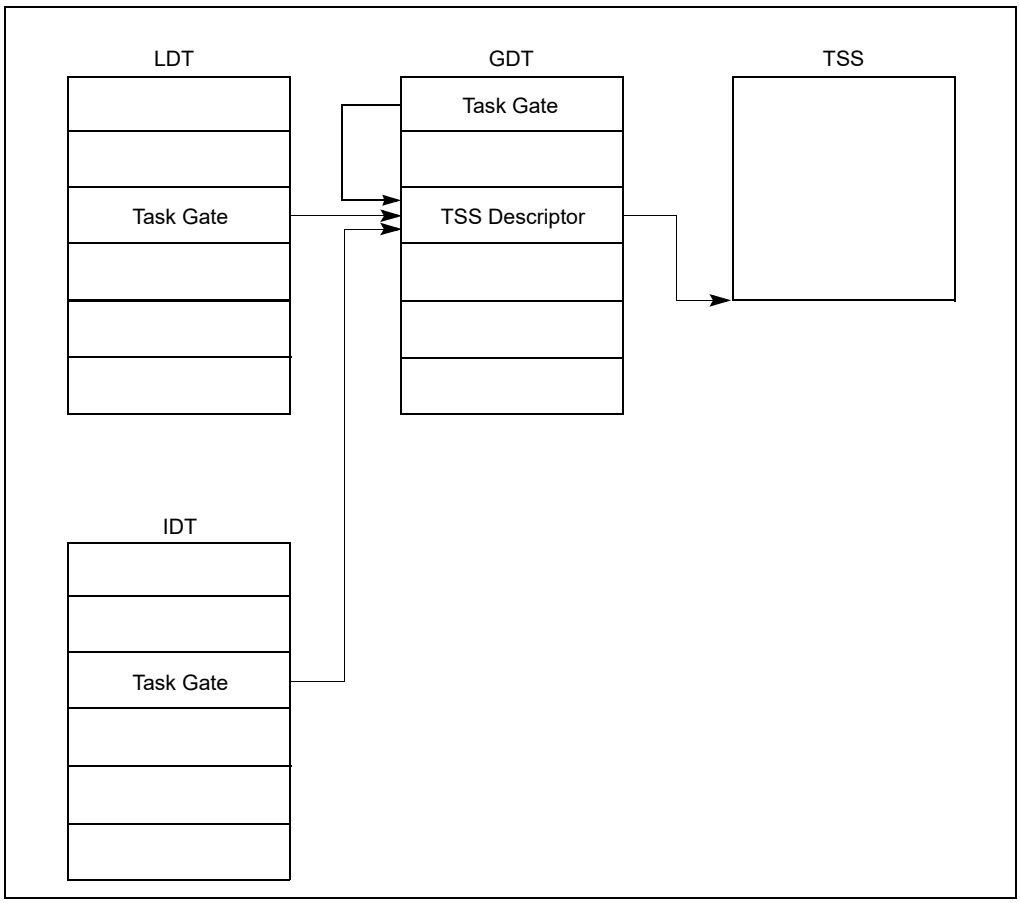

Figure 8-7. Task Gates Referencing the Same Task

8.3 TASK SWITCHING

The processor transfers execution to another task in one of four cases:

- The current program, task, or procedure executes a JMP or CALL instruction to a TSS descriptor in the GDT.
- The current program, task, or procedure executes a JMP or CALL instruction to a task-gate descriptor in the GDT or the current LDT.

- An interrupt or exception vector points to a task-gate descriptor in the IDT.
- The current task executes an IRET when the NT flag in the EFLAGS register is set.

JMP, CALL, and IRET instructions, as well as interrupts and exceptions, are all mechanisms for redirecting a program. The referencing of a TSS descriptor or a task gate (when calling or jumping to a task) or the state of the NT flag (when executing an IRET instruction) determines whether a task switch occurs.

The processor performs the following operations when switching to a new task:

1. Obtains the TSS segment selector for the new task as the operand of the JMP or CALL instruction, from a task gate, or from the previous task link field (for a task switch initiated with an IRET instruction).
2. Checks that the current (old) task is allowed to switch to the new task. Data-access privilege rules apply to JMP and CALL instructions. The CPL of the current (old) task and the RPL of the segment selector for the new task must be less than or equal to the DPL of the TSS descriptor or task gate being referenced. Exceptions, interrupts (except for those identified in the next sentence), and the IRET and INT1 instructions are permitted to switch tasks regardless of the DPL of the destination task-gate or TSS descriptor. For interrupts generated by the INT *n*, INT3, and INTO instructions, the DPL is checked and a general-protection exception (#GP) results if it is less than the CPL.[1]
3. Checks that the TSS descriptor of the new task is marked present and has a valid limit (greater than or equal to 67H). If the task switch was initiated by IRET and shadow stacks are enabled at the current CPL, then the SSP must be aligned to 8 bytes, else a #TS(current task TSS) fault is generated. If CR4.CET is 1, then the TSS must be a 32 bit TSS and the limit of the new task's TSS must be greater than or equal to 107 bytes, else a #TS(new task TSS) fault is generated.
4. Checks that the new task is available (call, jump, exception, or interrupt) or busy (IRET return).
5. Checks that the current (old) TSS, new TSS, and all segment descriptors used in the task switch are paged into system memory.
6. Saves the state of the current (old) task in the current task's TSS. The processor finds the base address of the current TSS in the task register and then copies the states of the following registers into the current TSS: all the general-purpose registers, segment selectors from the segment registers, the temporarily saved image of the EFLAGS register, and the instruction pointer register (EIP).
7. Loads the task register with the segment selector and descriptor for the new task's TSS.
8. If CET is enabled, the processor performs following shadow stack actions:

```
Read CS of new task from new task TSS
Read EFLAGS of new task from new task TSS
IF EFLAGS.VM = 1
    THEN
        new task CPL = 3;
    ELSE
        new task CPL = CS.RPL;
FI;
pushCsLipSsp = 0
IF task switch was initiated by CALL instruction, exception or interrupt
    IF shadow stack enabled at current CPL
        IF new task CPL < CPL and current task CPL = 3
            THEN
                IA32_PL3_SSP = SSP (* user ⟶ supervisor *)
            ELSE
                pushCsLipSsp = 1 (* no privilege change; supv ⟶ supv; supv ⟶ user *) tempSSP = SSP
```

1. The INT1 has opcode F1; the INT *n* instruction with *n*=1 has opcode CD 01.

```
                tempSsLIP =CSBASE + EIP
                tempSsCS = CS
            FI;
        FI;
    FI;
    verifyCsLIP = 0
    IF task switch was initiated by IRET
        IF shadow stacks enabled at current CPL
            IF (CPL of new Task = CPL of current Task) OR
                (CPL of new Task < 3 AND CPL of current Task < 3) OR
                (CPL or new Task < 3 AND CPL of current task = 3)
                    (* no privilege change or supervisor → supervisor or user → supervisor IRET *)
                    tempSsCS = shadow_stack_load 8 bytes from SSP+16;
                    tempSsLIP = shadow_stack_load 8 bytes from SSP+8;
                    tempSSP = shadow_stack_load 8 bytes from SSP;
                    SSP = SSP + 24;
                    verifyCsLIP = 1
            FI;
            // Clear busy flag on current shadow stack
             IF ( SSP & 0x07 == 0 )                    (* SSP must be aligned to 8B *)
                THEN
                    expected_token_value = (SSP & ~0x07) | BUSY_BIT;  (* busy - bit 0 - must be set*)
                    new_token_value      = SSP                        (* clear the busy bit *)
                    shadow_stack_lock_cmpxchg8b(SSP, new_token_value, expected_token_value)
            FI;
            SSP = 0
        FI;
    FI;
```

9. The TSS state is loaded into the processor. This includes the LDTR register, the PDBR (control register CR3), the EFLAGS register, the EIP register, the general-purpose registers, and the segment selectors. A fault during the load of this state may corrupt architectural state. (If paging is not enabled, a PDBR value is read from the new task's TSS, but it is not loaded into CR3.)
10. If the task switch was initiated with a JMP or IRET instruction, the processor clears the busy (B) flag in the current (old) task's TSS descriptor; if initiated with a CALL instruction, an exception, or an interrupt: the busy (B) flag is left set. (See Table 8-2.)
11. If the task switch was initiated with an IRET instruction, the processor clears the NT flag in a temporarily saved image of the EFLAGS register; if initiated with a CALL or JMP instruction, an exception, or an interrupt, the NT flag is left unchanged in the saved EFLAGS image.
12. If the task switch was initiated with a CALL instruction, an exception, or an interrupt, the processor will set the NT flag in the EFLAGS loaded from the new task. If initiated with an IRET instruction or JMP instruction, the NT flag will reflect the state of NT in the EFLAGS loaded from the new task (see Table 8-2).
13. If the task switch was initiated with a CALL instruction, JMP instruction, an exception, or an interrupt, the processor sets the busy (B) flag in the new task's TSS descriptor; if initiated with an IRET instruction, the busy (B) flag is left set.
14. The descriptors associated with the segment selectors are loaded and qualified. Any errors associated with this loading and qualification occur in the context of the new task and may corrupt architectural state.

15. If CET is enabled, the processor performs following shadow stack actions:

```
IF shadow stack enabled at current CPL OR indirect branch tracking at current CPL
        THEN
          IF EFLAGS.VM = 1
            THEN #TSS(new-Task-TSS);FI;
FI;
IF shadow stack enabled at current CPL
        IF task switch initiated by CALL instruction, JMP instruction, interrupt or exception (* switch stack *)
          new_SSP ← Load the 4 byte from offset 104 in the TSS
          // Verify new SSP to be legal
          IF new_SSP & 0x07 != 0
            THEN #TSS(New-Task-TSS); FI;
          expected_token_value = SSP;                  (* busy - bit 0 - must be clear *)
          new_token_value        = SSP | BUSY_BIT (* set the busy bit - bit 0*)
          IF shadow_stack_lock_cmpxchg8b(SSP, new_token_value,
                                                expected_token_value) != expected_token_value
            THEN #TSS(New-Task-TSS); FI;
          SSP = new_SSP
          IF pushCsLipSsp = 1 (* call, int, exception from user ⟶ user or supv ⟶ supv or supv ⟶ user *)
            Push tempSsCS, tempSsLip, tempSsSSP on shadow stack using 8B pushes[1]
          FI;
        FI;
FI;
IF task switch initiated by IRET
        IF verifyCsLIP = 1
          (* do 64 bit comparisons; CS zero padded to 64 bit; CSBASE+EIP zero padded to 64 bit *)
          IF tempSsCS and tempSsLIP do not match CS and CSBASE+EIP
            THEN #CP(FAR-RET/IRET); FI;
        FI;
        IF ShadowStackEnabled(CPL)
          THEN
            IF (verifyCsLIP == 0) tempSSP = IA32_PL3_SSP;
              IF tempSSP & 0x03 != 0 THEN #CP(FAR-RET/IRET) // verify aligned to 4 bytes
              IF tempSSP[63:32] != 0 THEN # CP(FAR-RET/IRET)
            SSP = tempSSP
        FI;
FI;
IF EndbranchEnabled(CPL)
        IF task switch initiated by CALL instruction, JMP instruction, interrupt or exception
          IF CPL = 3
            THEN
              IA32_U_CET.TRACKER = WAIT_FOR_ENDBRANCH
```

1. If any of these pushes leads to an exception or a VM exit, the supervisor shadow-stack token remains busy.

```
            IA32_U_CET.SUPPRESS = 0
        ELSE
            IA32_S_CET.TRACKER = WAIT_FOR_ENDBRANCH
            IA32_S_CET.SUPPRESS = 0
    FI;
  FI;
FI;
```

16. Begins executing the new task. (To an exception handler, the first instruction of the new task appears not to have been executed.)

NOTES

If all checks and saves have been carried out successfully, the processor commits to the task switch. If an unrecoverable error occurs in steps 1 through 8, the processor does not complete the task switch and ensures that the processor is returned to its state prior to the execution of the instruction that initiated the task switch.

If an unrecoverable error occurs in step 9, architectural state may be corrupted, but an attempt will be made to handle the error in the prior execution environment. If an unrecoverable error occurs after the commit point (in step 13), the processor completes the task switch (without performing additional access and segment availability checks) and generates the appropriate exception prior to beginning execution of the new task.

If exceptions occur after the commit point, the exception handler must finish the task switch itself before allowing the processor to begin executing the new task. See Chapter 6, "Interrupt 10—Invalid TSS Exception (#TS)," for more information about the affect of exceptions on a task when they occur after the commit point of a task switch.

The state of the currently executing task is always saved when a successful task switch occurs. If the task is resumed, execution starts with the instruction pointed to by the saved EIP value, and the registers are restored to the values they held when the task was suspended.

When switching tasks, the privilege level of the new task does not inherit its privilege level from the suspended task. The new task begins executing at the privilege level specified in the CPL field of the CS register, which is loaded from the TSS. Because tasks are isolated by their separate address spaces and TSSs and because privilege rules control access to a TSS, software does not need to perform explicit privilege checks on a task switch.

Table 8-1 shows the exception conditions that the processor checks for when switching tasks. It also shows the exception that is generated for each check if an error is detected and the segment that the error code references. (The order of the checks in the table is the order used in the P6 family processors. The exact order is model specific and may be different for other IA-32 processors.) Exception handlers designed to handle these exceptions may be subject to recursive calls if they attempt to reload the segment selector that generated the exception. The cause of the exception (or the first of multiple causes) should be fixed before reloading the selector.

Table 8-1. Exception Conditions Checked During a Task Switch

Condition Checked	Exception[1]	Error Code Reference[2]
Segment selector for a TSS descriptor references the GDT and is within the limits of the table.	#GP #TS (for IRET)	New Task's TSS
P bit is set in TSS descriptor.	#NP	New Task's TSS
TSS descriptor is not busy (for task switch initiated by a call, interrupt, or exception).	#GP (for JMP, CALL, INT)	Task's back-link TSS
TSS descriptor is not busy (for task switch initiated by an IRET instruction).	#TS (for IRET)	New Task's TSS
TSS segment limit greater than or equal to 108 (for 32-bit TSS) or 44 (for 16-bit TSS).	#TS	New Task's TSS

Table 8-1. Exception Conditions Checked During a Task Switch (Contd.)

Condition Checked	Exception[1]	Error Code Reference[2]
TSS segment limit greater than or equal to 108 (for 32-bit TSS) if CR4.CET = 1.[3]	#TS	New Task's TSS
If shadow stack enabled and SSP not aligned to 8 bytes (for task switch initiated by an IRET instruction).[3]	#TS	Current Task's TSS
Registers are loaded from the values in the TSS.		
LDT segment selector of new task is valid [4].	#TS	New Task's LDT
If code segment is non-conforming, its DPL should equal its RPL.	#TS	New Code Segment
If code segment is conforming, its DPL should be less than or equal to its RPL.	#TS	New Code Segment
SS segment selector is valid [2].	#TS	New Stack Segment
P bit is set in stack segment descriptor.	#SS	New Stack Segment
Stack segment DPL should equal CPL.	#TS	New stack segment
P bit is set in new task's LDT descriptor.	#TS	New Task's LDT
CS segment selector is valid [4].	#TS	New Code Segment
P bit is set in code segment descriptor.	#NP	New Code Segment
Stack segment DPL should equal its RPL.	#TS	New Stack Segment
DS, ES, FS, and GS segment selectors are valid [4].	#TS	New Data Segment
DS, ES, FS, and GS segments are readable.	#TS	New Data Segment
P bits are set in descriptors of DS, ES, FS, and GS segments.	#NP	New Data Segment
DS, ES, FS, and GS segment DPL greater than or equal to CPL (unless these are conforming segments).	#TS	New Data Segment
Shadow Stack Pointer in a task not aligned to 8 bytes (for task switch initiated by a call, interrupt, or exception).[3]	#TS	New Task's TSS
If EFLAGS.VM=1 and shadow stacks are enabled.[3]	#TS	New Task's TSS
Supervisor Shadow Stack Token verification failures (for task switch initiated by a call, interrupt, jump, or exception):[3]	#TS	New Task's TSS
- Busy bit already set.		
- Address in Shadow stack token does not match SSP value from TSS.		
If task switch initiated by IRET, CS and LIP stored on old task shadow stack does not match CS and LIP of new task.[3]	#CP	FAR-RET/IRET
If task switch initiated by IRET and SSP of new task loaded from shadow stack of old task (if new task CPL is < 3) OR the SSP from IA32_PL3_SSP (if new task CPL = 3) fails the following checks:[3]	#CP	FAR-RET/IRET
- Not aligned to 4 bytes.		
- Is beyond 4G.		

NOTES:

1. #NP is segment-not-present exception, #GP is general-protection exception, #TS is invalid-TSS exception, and #SS is stack-fault exception.
2. The error code contains an index to the segment descriptor referenced in this column.
3. Valid when CET is enabled.
4. A segment selector is valid if it is in a compatible type of table (GDT or LDT), occupies an address within the table's segment limit, and refers to a compatible type of descriptor (for example, a segment selector in the CS register only is valid when it points to a code-segment descriptor).

The TS (task switched) flag in the control register CR0 is set every time a task switch occurs. System software uses the TS flag to coordinate the actions of floating-point unit when generating floating-point exceptions with the rest of the processor. The TS flag indicates that the context of the floating-point unit may be different from that of the current task. See Section 2.5, "Control Registers", for a detailed description of the function and use of the TS flag.

8.4 TASK LINKING

The previous task link field of the TSS (sometimes called the "backlink") and the NT flag in the EFLAGS register are used to return execution to the previous task. EFLAGS.NT = 1 indicates that the currently executing task is nested within the execution of another task.

When a CALL instruction, an interrupt, or an exception causes a task switch: the processor copies the segment selector for the current TSS to the previous task link field of the TSS for the new task; it then sets EFLAGS.NT = 1. If software uses an IRET instruction to suspend the new task, the processor checks for EFLAGS.NT = 1; it then uses the value in the previous task link field to return to the previous task. See Figures 8-8.

When a JMP instruction causes a task switch, the new task is not nested. The previous task link field is not used and EFLAGS.NT = 0. Use a JMP instruction to dispatch a new task when nesting is not desired.

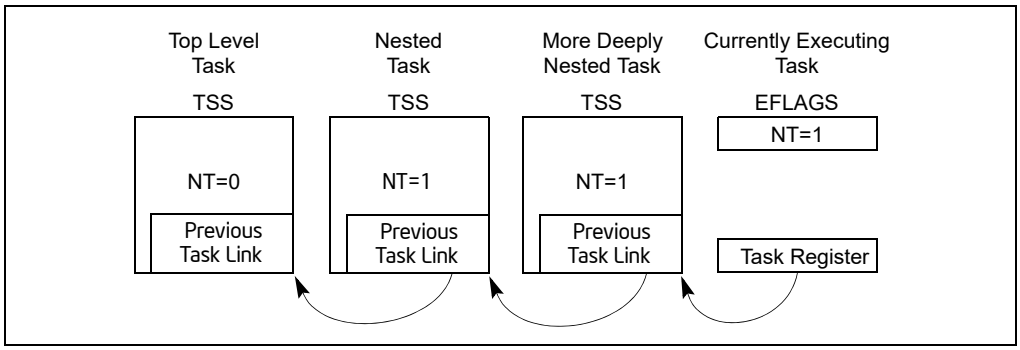

Figure 8-8. Nested Tasks

Table 8-2 shows the busy flag (in the TSS segment descriptor), the NT flag, the previous task link field, and TS flag (in control register CR0) during a task switch.

The NT flag may be modified by software executing at any privilege level. It is possible for a program to set the NT flag and execute an IRET instruction. This might randomly invoke the task specified in the previous link field of the current task's TSS. To keep such spurious task switches from succeeding, the operating system should initialize the previous task link field in every TSS that it creates to 0.

Table 8-2. Effect of a Task Switch on Busy Flag, NT Flag, Previous Task Link Field, and TS Flag

Flag or Field	Effect of JMP instruction	Effect of CALL Instruction or Interrupt	Effect of IRET Instruction
Busy (B) flag of new task.	Flag is set. Must have been clear before.	Flag is set. Must have been clear before.	No change. Must have been set.
Busy flag of old task.	Flag is cleared.	No change. Flag is currently set.	Flag is cleared.
NT flag of new task.	Set to value from TSS of new task.	Flag is set.	Set to value from TSS of new task.
NT flag of old task.	No change.	No change.	Flag is cleared.
Previous task link field of new task.	No change.	Loaded with selector for old task's TSS.	No change.
Previous task link field of old task.	No change.	No change.	No change.
TS flag in control register CR0.	Flag is set.	Flag is set.	Flag is set.

8.4.1 Use of Busy Flag To Prevent Recursive Task Switching

A TSS allows only one context to be saved for a task; therefore, once a task is called (dispatched), a recursive (or re-entrant) call to the task would cause the current state of the task to be lost. The busy flag in the TSS segment descriptor is provided to prevent re-entrant task switching and a subsequent loss of task state information. The processor manages the busy flag as follows:

1. When dispatching a task, the processor sets the busy flag of the new task.
2. If during a task switch, the current task is placed in a nested chain (the task switch is being generated by a CALL instruction, an interrupt, or an exception), the busy flag for the current task remains set.
3. When switching to the new task (initiated by a CALL instruction, interrupt, or exception), the processor generates a general-protection exception (#GP) if the busy flag of the new task is already set. If the task switch is initiated with an IRET instruction, the exception is not raised because the processor expects the busy flag to be set.
4. When a task is terminated by a jump to a new task (initiated with a JMP instruction in the task code) or by an IRET instruction in the task code, the processor clears the busy flag, returning the task to the "not busy" state.

The processor prevents recursive task switching by preventing a task from switching to itself or to any task in a nested chain of tasks. The chain of nested suspended tasks may grow to any length, due to multiple calls, interrupts, or exceptions. The busy flag prevents a task from being invoked if it is in this chain.

The busy flag may be used in multiprocessor configurations, because the processor follows a LOCK protocol (on the bus or in the cache) when it sets or clears the busy flag. This lock keeps two processors from invoking the same task at the same time. See Section 9.1.2.1, "Automatic Locking," for more information about setting the busy flag in a multiprocessor applications.

8.4.2 Modifying Task Linkages

In a uniprocessor system, in situations where it is necessary to remove a task from a chain of linked tasks, use the following procedure to remove the task:

1. Disable interrupts.
2. Change the previous task link field in the TSS of the pre-empting task (the task that suspended the task to be removed). It is assumed that the pre-empting task is the next task (newer task) in the chain from the task to be removed. Change the previous task link field to point to the TSS of the next oldest task in the chain or to an even older task in the chain.
3. Clear the busy (B) flag in the TSS segment descriptor for the task being removed from the chain. If more than one task is being removed from the chain, the busy flag for each task being remove must be cleared.
4. Enable interrupts.

In a multiprocessing system, additional synchronization and serialization operations must be added to this procedure to ensure that the TSS and its segment descriptor are both locked when the previous task link field is changed and the busy flag is cleared.

8.5 TASK ADDRESS SPACE

The address space for a task consists of the segments that the task can access. These segments include the code, data, stack, and system segments referenced in the TSS and any other segments accessed by the task code. The segments are mapped into the processor's linear address space, which is in turn mapped into the processor's physical address space (either directly or through paging).

The LDT segment field in the TSS can be used to give each task its own LDT. Giving a task its own LDT allows the task address space to be isolated from other tasks by placing the segment descriptors for all the segments associated with the task in the task's LDT.

It also is possible for several tasks to use the same LDT. This is a memory-efficient way to allow specific tasks to communicate with or control each other, without dropping the protection barriers for the entire system.

Because all tasks have access to the GDT, it also is possible to create shared segments accessed through segment descriptors in this table.

If paging is enabled, the CR3 register (PDBR) field in the TSS allows each task to have its own set of page tables for mapping linear addresses to physical addresses. Or, several tasks can share the same set of page tables.

8.5.1 Mapping Tasks to the Linear and Physical Address Spaces

Tasks can be mapped to the linear address space and physical address space in one of two ways:

- **One linear-to-physical address space mapping is shared among all tasks.** — When paging is not enabled, this is the only choice. Without paging, all linear addresses map to the same physical addresses. When paging is enabled, this form of linear-to-physical address space mapping is obtained by using one page directory for all tasks. The linear address space may exceed the available physical space if demand-paged virtual memory is supported.
- **Each task has its own linear address space that is mapped to the physical address space.** — This form of mapping is accomplished by using a different page directory for each task. Because the PDBR (control register CR3) is loaded on task switches, each task may have a different page directory.

The linear address spaces of different tasks may map to completely distinct physical addresses. If the entries of different page directories point to different page tables and the page tables point to different pages of physical memory, then the tasks do not share physical addresses.

With either method of mapping task linear address spaces, the TSSs for all tasks must lie in a shared area of the physical space, which is accessible to all tasks. This mapping is required so that the mapping of TSS addresses does not change while the processor is reading and updating the TSSs during a task switch. The linear address space mapped by the GDT also should be mapped to a shared area of the physical space; otherwise, the purpose of the GDT is defeated. Figure 8-9 shows how the linear address spaces of two tasks can overlap in the physical space by sharing page tables.

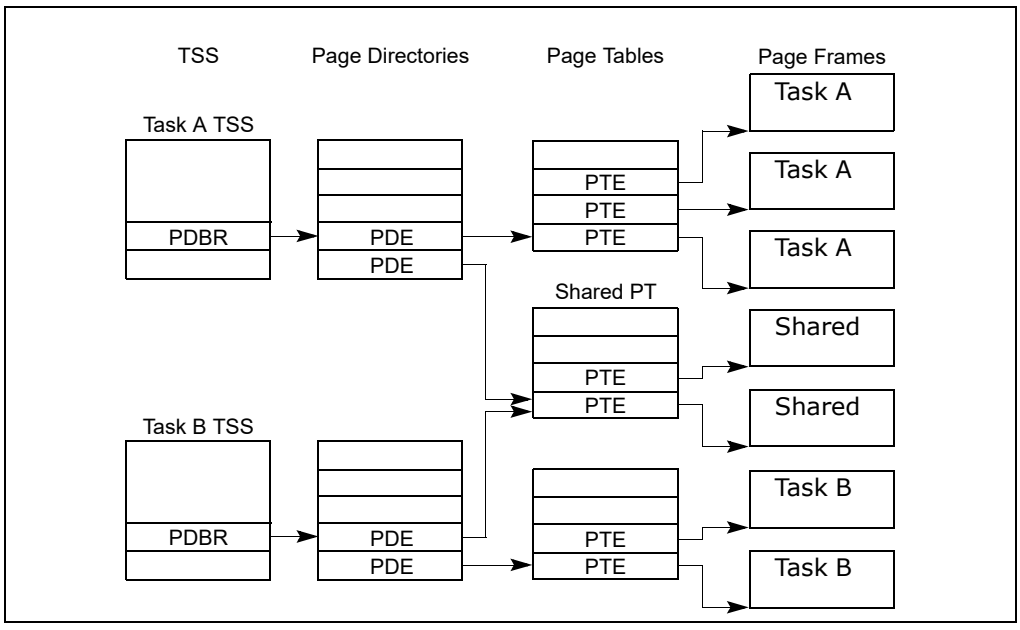

Figure 8-9. Overlapping Linear-to-Physical Mappings

8.5.2 Task Logical Address Space

To allow the sharing of data among tasks, use the following techniques to create shared logical-to-physical address-space mappings for data segments:

- **Through the segment descriptors in the GDT** — All tasks must have access to the segment descriptors in the GDT. If some segment descriptors in the GDT point to segments in the linear-address space that are mapped into an area of the physical-address space common to all tasks, then all tasks can share the data and code in those segments.
- **Through a shared LDT** — Two or more tasks can use the same LDT if the LDT fields in their TSSs point to the same LDT. If some segment descriptors in a shared LDT point to segments that are mapped to a common area of the physical address space, the data and code in those segments can be shared among the tasks that share the LDT. This method of sharing is more selective than sharing through the GDT, because the sharing can be limited to specific tasks. Other tasks in the system may have different LDTs that do not give them access to the shared segments.
- **Through segment descriptors in distinct LDTs that are mapped to common addresses in linear address space** — If this common area of the linear address space is mapped to the same area of the physical address space for each task, these segment descriptors permit the tasks to share segments. Such segment descriptors are commonly called aliases. This method of sharing is even more selective than those listed above, because, other segment descriptors in the LDTs may point to independent linear addresses which are not shared.

8.6 16-BIT TASK-STATE SEGMENT (TSS)

The 32-bit IA-32 processors also recognize a 16-bit TSS format like the one used in Intel 286 processors (see Figure 8-10). This format is supported for compatibility with software written to run on earlier IA-32 processors.

The following information is important to know about the 16-bit TSS.

- Do not use a 16-bit TSS to implement a virtual-8086 task.
- The valid segment limit for a 16-bit TSS is 2CH.
- The 16-bit TSS does not contain a field for the base address of the page directory, which is loaded into control register CR3. A separate set of page tables for each task is not supported for 16-bit tasks. If a 16-bit task is dispatched, the page-table structure for the previous task is used.
- The I/O base address is not included in the 16-bit TSS. None of the functions of the I/O map are supported.
- When task state is saved in a 16-bit TSS, the upper 16 bits of the EFLAGS register and the EIP register are lost.
- When the general-purpose registers are loaded or saved from a 16-bit TSS, the upper 16 bits of the registers are modified and not maintained.

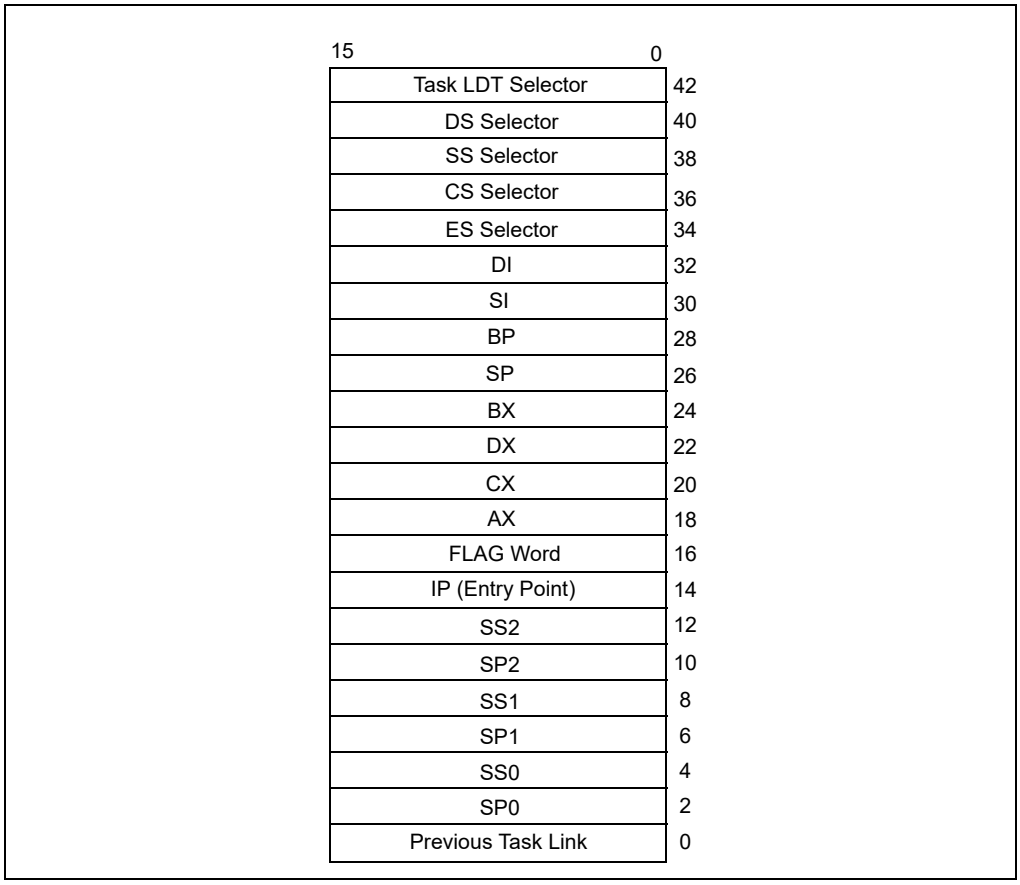

Figure 8-10. 16-Bit TSS Format

8.7 TASK MANAGEMENT IN 64-BIT MODE

In 64-bit mode, task structure and task state are similar to those in protected mode. However, the task switching mechanism available in protected mode is not supported in 64-bit mode. Task management and switching must be performed by software. The processor issues a general-protection exception (#GP) if the following is attempted in 64-bit mode:

- Control transfer to a TSS or a task gate using JMP, CALL, INT *n*, INT3, INTO, INT1, or interrupt.
- An IRET with EFLAGS.NT (nested task) set to 1.

Although hardware task-switching is not supported in 64-bit mode, a 64-bit task state segment (TSS) must exist. Figure 8-11 shows the format of a 64-bit TSS. The TSS holds information important to 64-bit mode and that is not directly related to the task-switch mechanism. This information includes:

- **RSPn** — The full 64-bit canonical forms of the stack pointers (RSP) for privilege levels 0-2.
- **ISTn** — The full 64-bit canonical forms of the interrupt stack table (IST) pointers.
- **I/O map base address** — The 16-bit offset to the I/O permission bit map from the 64-bit TSS base.

The operating system must create at least one 64-bit TSS after activating IA-32e mode. It must execute the LTR instruction (in 64-bit mode) to load the TR register with a pointer to the 64-bit TSS responsible for both 64-bit-mode programs and compatibility-mode programs.

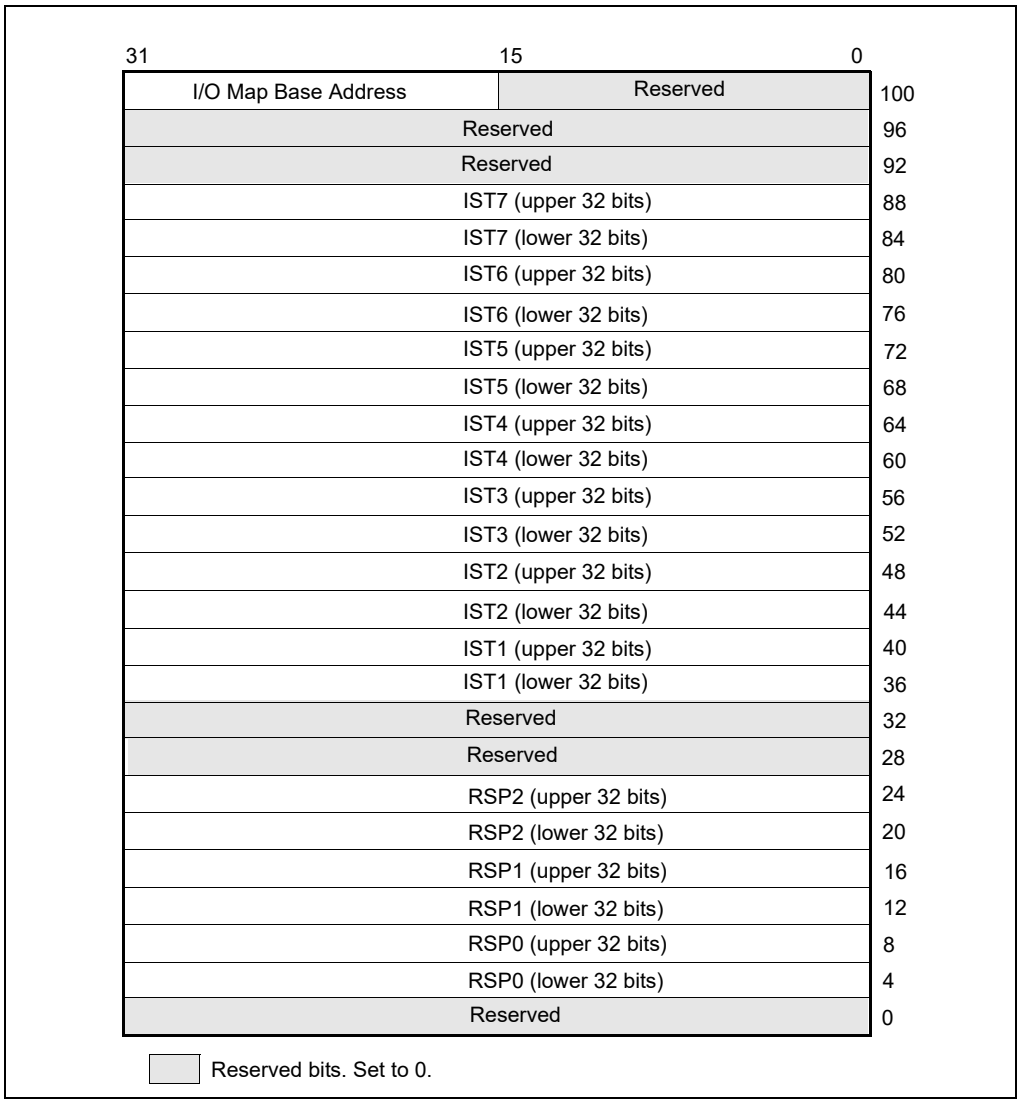

Figure 8-11. 64-Bit TSS Format

CHAPTER 9
MULTIPLE-PROCESSOR MANAGEMENT

The Intel 64 and IA-32 architectures provide mechanisms for managing and improving the performance of multiple processors connected to the same system bus. These include:

- Bus locking and/or cache coherency management for performing atomic operations on system memory.
- Serializing instructions.
- An advance programmable interrupt controller (APIC) located on the processor chip (see Chapter 11, "Advanced Programmable Interrupt Controller (APIC)"). This feature was introduced by the Pentium processor.
- A second-level cache (level 2, L2). For the Pentium 4, Intel Xeon, and P6 family processors, the L2 cache is included in the processor package and is tightly coupled to the processor. For the Pentium and Intel486 processors, pins are provided to support an external L2 cache.
- A third-level cache (level 3, L3). For Intel Xeon processors, the L3 cache is included in the processor package and is tightly coupled to the processor.
- Intel Hyper-Threading Technology. This extension to the Intel 64 and IA-32 architectures enables a single processor core to execute two or more threads concurrently (see Section 9.5, "Intel® Hyper-Threading Technology and Intel® Multi-Core Technology").

These mechanisms are particularly useful in symmetric-multiprocessing (SMP) systems. However, they can also be used when an Intel 64 or IA-32 processor and a special-purpose processor (such as a communications, graphics, or video processor) share the system bus.

These multiprocessing mechanisms have the following characteristics:

- To maintain system memory coherency — When two or more processors are attempting simultaneously to access the same address in system memory, some communication mechanism or memory access protocol must be available to promote data coherency and, in some instances, to allow one processor to temporarily lock a memory location.
- To maintain cache consistency — When one processor accesses data cached on another processor, it must not receive incorrect data. If it modifies data, all other processors that access that data must receive the modified data.
- To allow predictable ordering of writes to memory — In some circumstances, it is important that memory writes be observed externally in precisely the same order as programmed.
- To distribute interrupt handling among a group of processors — When several processors are operating in a system in parallel, it is useful to have a centralized mechanism for receiving interrupts and distributing them to available processors for servicing.
- To increase system performance by exploiting the multi-threaded and multi-process nature of contemporary operating systems and applications.

The caching mechanism and cache consistency of Intel 64 and IA-32 processors are discussed in Chapter 12. The APIC architecture is described in Chapter 11. Bus and memory locking, serializing instructions, memory ordering, and Intel Hyper-Threading Technology are discussed in the following sections.

9.1 LOCKED ATOMIC OPERATIONS

The 32-bit IA-32 processors support locked atomic operations on locations in system memory. These operations are typically used to manage shared data structures (such as semaphores, segment descriptors, system segments, or page tables) in which two or more processors may try simultaneously to modify the same field or flag. The processor uses three interdependent mechanisms for carrying out locked atomic operations:

- Guaranteed atomic operations.
- Bus locking, using the LOCK# signal and the LOCK instruction prefix.

- Cache coherency protocols that ensure that atomic operations can be carried out on cached data structures (cache lock); this mechanism is present in the Pentium 4, Intel Xeon, and P6 family processors.

These mechanisms are interdependent in the following ways. Certain basic memory transactions (such as reading or writing a byte in system memory) are always guaranteed to be handled atomically. That is, once started, the processor guarantees that the operation will be completed before another processor or bus agent is allowed access to the memory location. The processor also supports bus locking for performing selected memory operations (such as a read-modify-write operation in a shared area of memory) that typically need to be handled atomically, but are not automatically handled this way. Because frequently used memory locations are often cached in a processor's L1 or L2 caches, atomic operations can often be carried out inside a processor's caches without asserting the bus lock. Here the processor's cache coherency protocols ensure that other processors that are caching the same memory locations are managed properly while atomic operations are performed on cached memory locations.

NOTE

Where there are contested lock accesses, software may need to implement algorithms that ensure fair access to resources in order to prevent lock starvation. The hardware provides no resource that guarantees fairness to participating agents. It is the responsibility of software to manage the fairness of semaphores and exclusive locking functions.

The mechanisms for handling locked atomic operations have evolved with the complexity of IA-32 processors. More recent IA-32 processors (such as the Pentium 4, Intel Xeon, and P6 family processors) and Intel 64 provide a more refined locking mechanism than earlier processors. These mechanisms are described in the following sections.

9.1.1 Guaranteed Atomic Operations

The Intel486 processor (and newer processors since) guarantees that the following basic memory operations will always be carried out atomically:

- Reading or writing a byte.
- Reading or writing a word aligned on a 16-bit boundary.
- Reading or writing a doubleword aligned on a 32-bit boundary.

The Pentium processor (and newer processors since) guarantees that the following additional memory operations will always be carried out atomically:

- Reading or writing a quadword aligned on a 64-bit boundary.
- 16-bit accesses to uncached memory locations that fit within a 32-bit data bus.

The P6 family processors (and newer processors since) guarantee that the following additional memory operation will always be carried out atomically:

- Unaligned 16-, 32-, and 64-bit accesses to cached memory that fit within a cache line.

Processors that enumerate support for Intel® AVX (by setting the feature flag CPUID.01H:ECX.AVX[bit 28]) guarantee that the 16-byte memory operations performed by the following instructions will always be carried out atomically:

- MOVAPD, MOVAPS, and MOVDQA.
- VMOVAPD, VMOVAPS, and VMOVDQA when encoded with VEX.128.
- VMOVAPD, VMOVAPS, VMOVDQA32, and VMOVDQA64 when encoded with EVEX.128 and k0 (masking disabled).

(Note that these instructions require the linear addresses of their memory operands to be 16-byte aligned.)

Accesses to cacheable memory that are split across cache lines and page boundaries are not guaranteed to be atomic by the Intel Core 2 Duo, Intel Atom, Intel Core Duo, Pentium M, Pentium 4, Intel Xeon, P6 family, Pentium, and Intel486 processors. The Intel Core 2 Duo, Intel Atom, Intel Core Duo, Pentium M, Pentium 4, Intel Xeon, and P6 family processors provide bus control signals that permit external memory subsystems to make split accesses atomic; however, nonaligned data accesses will seriously impact the performance of the processor and should be avoided.

Except as noted above, an x87 instruction or an SSE instruction that accesses data larger than a quadword may be implemented using multiple memory accesses. If such an instruction stores to memory, some of the accesses may complete (writing to memory) while another causes the operation to fault for architectural reasons (e.g., due an page-table entry that is marked "not present"). In this case, the effects of the completed accesses may be visible to software even though the overall instruction caused a fault. If TLB invalidation has been delayed (see Section 4.10.4.4), such page faults may occur even if all accesses are to the same page.

9.1.2 Bus Locking

Intel 64 and IA-32 processors provide a LOCK# signal that is asserted automatically during certain critical memory operations to lock the system bus or equivalent link. While this output signal is asserted, requests from other processors or bus agents for control of the bus are blocked. Software can specify other occasions when the LOCK semantics are to be followed by prepending the LOCK prefix to an instruction.

In the case of the Intel386, Intel486, and Pentium processors, explicitly locked instructions will result in the assertion of the LOCK# signal. It is the responsibility of the hardware designer to make the LOCK# signal available in system hardware to control memory accesses among processors.

For the P6 and more recent processor families, if the memory area being accessed is cached internally in the processor, the LOCK# signal is generally not asserted; instead, locking is only applied to the processor's caches (see Section 9.1.4, "Effects of a LOCK Operation on Internal Processor Caches").

9.1.2.1 Automatic Locking

The operations on which the processor automatically follows the LOCK semantics are as follows:

- When executing an XCHG instruction that references memory.
- **When setting the B (busy) flag of a TSS descriptor** — The processor tests and sets the busy flag in the type field of the TSS descriptor when switching to a task. To ensure that two processors do not switch to the same task simultaneously, the processor follows the LOCK semantics while testing and setting this flag.
- **When updating segment descriptors** — When loading a segment descriptor, the processor will set the accessed flag in the segment descriptor if the flag is clear. During this operation, the processor follows the LOCK semantics so that the descriptor will not be modified by another processor while it is being updated. For this action to be effective, operating-system procedures that update descriptors should use the following steps:
  - Use a locked operation to modify the access-rights byte to indicate that the segment descriptor is not-present, and specify a value for the type field that indicates that the descriptor is being updated.
  - Update the fields of the segment descriptor. (This operation may require several memory accesses; therefore, locked operations cannot be used.)
  - Use a locked operation to modify the access-rights byte to indicate that the segment descriptor is valid and present.
- The Intel386 processor always updates the accessed flag in the segment descriptor, whether it is clear or not. The Pentium 4, Intel Xeon, P6 family, Pentium, and Intel486 processors only update this flag if it is not already set.
- **When updating page-directory and page-table entries** — When updating page-directory and page-table entries, the processor uses locked cycles to set the accessed and dirty flag in the page-directory and page-table entries.
- **Acknowledging interrupts** — After an interrupt request, an interrupt controller may use the data bus to send the interrupt's vector to the processor. The processor follows the LOCK semantics during this time to ensure that no other data appears on the data bus while the vector is being transmitted.

9.1.2.2 Software Controlled Bus Locking

To explicitly force the LOCK semantics, software can use the LOCK prefix with the following instructions when they are used to modify a memory location. An invalid-opcode exception (#UD) is generated when the LOCK prefix is used with any other instruction or when no write operation is made to memory (that is, when the destination operand is in a register).

- The bit test and modify instructions (BTS, BTR, and BTC).
- The exchange instructions (XADD, CMPXCHG, and CMPXCHG8B).
- The LOCK prefix is automatically assumed for XCHG instruction.
- The following single-operand arithmetic and logical instructions: INC, DEC, NOT, and NEG.
- The following two-operand arithmetic and logical instructions: ADD, ADC, SUB, SBB, AND, OR, and XOR.

A locked instruction is guaranteed to lock only the area of memory defined by the destination operand, but may be interpreted by the system as a lock for a larger memory area.

Software should access semaphores (shared memory used for signalling between multiple processors) using identical addresses and operand lengths. For example, if one processor accesses a semaphore using a word access, other processors should not access the semaphore using a byte access.

NOTE

Do not implement semaphores using the WC memory type. Do not perform non-temporal stores to a cache line containing a location used to implement a semaphore.

The integrity of a bus lock is not affected by the alignment of the memory field. The LOCK semantics are followed for as many bus cycles as necessary to update the entire operand. However, it is recommend that locked accesses be aligned on their natural boundaries for better system performance:

- Any boundary for an 8-bit access (locked or otherwise).
- 16-bit boundary for locked word accesses.
- 32-bit boundary for locked doubleword accesses.
- 64-bit boundary for locked quadword accesses.

Locked operations are atomic with respect to all other memory operations and all externally visible events. Only instruction fetch and page table accesses can pass locked instructions. Locked instructions can be used to synchronize data written by one processor and read by another processor.

For the P6 family processors, locked operations serialize all outstanding load and store operations (that is, wait for them to complete). This rule is also true for the Pentium 4 and Intel Xeon processors, with one exception. Load operations that reference weakly ordered memory types (such as the WC memory type) may not be serialized.

Locked instructions should not be used to ensure that data written can be fetched as instructions.

NOTE

The locked instructions for the current versions of the Pentium 4, Intel Xeon, P6 family, Pentium, and Intel486 processors allow data written to be fetched as instructions. However, Intel recommends that developers who require the use of self-modifying code use a different synchronizing mechanism, described in the following sections.

9.1.3 Handling Self- and Cross-Modifying Code

The act of a processor writing data into a currently executing code segment with the intent of executing that data as code is called **self-modifying code**. IA-32 processors exhibit model-specific behavior when executing self-modified code, depending upon how far ahead of the current execution pointer the code has been modified.

As processor microarchitectures become more complex and start to speculatively execute code ahead of the retirement point (as in P6 and more recent processor families), the rules regarding which code should execute, pre- or post-modification, become blurred. To write self-modifying code and ensure that it is compliant with current and future versions of the IA-32 architectures, use one of the following coding options:

```
(* OPTION 1 *)
Store modified code (as data) into code segment;
Jump to new code or an intermediate location;
Execute new code;
```

```
(* OPTION 2 *)
Store modified code (as data) into code segment;
Execute a serializing instruction; (* For example, CPUID instruction *)
Execute new code;
```

The use of one of these options is not required for programs intended to run on the Pentium or Intel486 processors, but are recommended to ensure compatibility with the P6 and more recent processor families.

Self-modifying code will execute at a lower level of performance than non-self-modifying or normal code. The degree of the performance deterioration will depend upon the frequency of modification and specific characteristics of the code.

The act of one processor writing data into the currently executing code segment of a second processor with the intent of having the second processor execute that data as code is called **cross-modifying code**. As with self-modifying code, IA-32 processors exhibit model-specific behavior when executing cross-modifying code, depending upon how far ahead of the executing processors current execution pointer the code has been modified.

To write cross-modifying code and ensure that it is compliant with current and future versions of the IA-32 architecture, the following processor synchronization algorithm must be implemented:

```
(* Action of Modifying Processor *)
Memory_Flag := 0; (* Set Memory_Flag to value other than 1 *)
Store modified code (as data) into code segment;
Memory_Flag := 1;

(* Action of Executing Processor *)
WHILE (Memory_Flag ≠ 1)
    Wait for code to update;
ELIHW;
Execute serializing instruction; (* For example, CPUID instruction *)
Begin executing modified code;
```

(The use of this option is not required for programs intended to run on the Intel486 processor, but is recommended to ensure compatibility with the Pentium 4, Intel Xeon, P6 family, and Pentium processors.)

Like self-modifying code, cross-modifying code will execute at a lower level of performance than non-cross-modifying (normal) code, depending upon the frequency of modification and specific characteristics of the code.

The restrictions on self-modifying code and cross-modifying code also apply to the Intel 64 architecture.

9.1.4 Effects of a LOCK Operation on Internal Processor Caches

For the Intel486 and Pentium processors, the LOCK# signal is always asserted on the bus during a LOCK operation, even if the area of memory being locked is cached in the processor.

For the P6 and more recent processor families, if the area of memory being locked during a LOCK operation is cached in the processor that is performing the LOCK operation as write-back memory and is completely contained in a cache line, the processor may not assert the LOCK# signal on the bus. Instead, it will modify the memory location internally and allow it's cache coherency mechanism to ensure that the operation is carried out atomically. This operation is called "cache locking." The cache coherency mechanism automatically prevents two or more processors that have cached the same area of memory from simultaneously modifying data in that area.

9.2 MEMORY ORDERING

The term **memory ordering** refers to the order in which the processor issues reads (loads) and writes (stores) through the system bus to system memory. The Intel 64 and IA-32 architectures support several memory-ordering models depending on the implementation of the architecture. For example, the Intel386 processor enforces **program ordering** (generally referred to as **strong ordering**), where reads and writes are issued on the system bus in the order they occur in the instruction stream under all circumstances.

To allow performance optimization of instruction execution, the IA-32 architecture allows departures from strong-ordering model called **processor ordering** in Pentium 4, Intel Xeon, and P6 family processors. These **processor-ordering** variations (called here the **memory-ordering model**) allow performance enhancing operations such as allowing reads to go ahead of buffered writes. The goal of any of these variations is to increase instruction execution speeds, while maintaining memory coherency, even in multiple-processor systems.

Section 9.2.1 and Section 9.2.2 describe the memory-ordering implemented by Intel486, Pentium, Intel Core 2 Duo, Intel Atom, Intel Core Duo, Pentium 4, Intel Xeon, and P6 family processors. Section 9.2.3 gives examples illustrating the behavior of the memory-ordering model on IA-32 and Intel-64 processors. Section 9.2.4 considers the special treatment of stores for string operations and Section 9.2.5 discusses how memory-ordering behavior may be modified through the use of specific instructions.

9.2.1 Memory Ordering in the Intel® Pentium® and Intel486™ Processors

The Pentium and Intel486 processors follow the processor-ordered memory model; however, they operate as strongly-ordered processors under most circumstances. Reads and writes always appear in programmed order at the system bus—except for the following situation where processor ordering is exhibited. Read misses are permitted to go ahead of buffered writes on the system bus when all the buffered writes are cache hits and, therefore, are not directed to the same address being accessed by the read miss.

In the case of I/O operations, both reads and writes always appear in programmed order.

Software intended to operate correctly in processor-ordered processors (such as the Pentium 4, Intel Xeon, and P6 family processors) should not depend on the relatively strong ordering of the Pentium or Intel486 processors. Instead, it should ensure that accesses to shared variables that are intended to control concurrent execution among processors are explicitly required to obey program ordering through the use of appropriate locking or serializing operations (see Section 9.2.5, "Strengthening or Weakening the Memory-Ordering Model").

9.2.2 Memory Ordering in P6 and More Recent Processor Families

The Intel Core 2 Duo, Intel Atom, Intel Core Duo, Pentium 4, and P6 family processors also use a processor-ordered memory-ordering model that can be further defined as "write ordered with store-buffer forwarding." This model can be characterized as follows.

In a single-processor system for memory regions defined as write-back cacheable, the memory-ordering model respects the following principles (**Note** the memory-ordering principles for single-processor and multiple-processor systems are written from the perspective of software executing on the processor, where the term "processor" refers to a logical processor. For example, a physical processor supporting multiple cores and/or Intel Hyper-Threading Technology is treated as a multi-processor systems.):

- Reads are not reordered with other reads.
- Writes are not reordered with older reads.
- Writes to memory are not reordered with other writes, with the following exceptions:
  - — streaming stores (writes) executed with the non-temporal move instructions (MOVNTI, MOVNTQ, MOVNTDQ, MOVNTPS, and MOVNTPD); and
  - — string operations (see Section 9.2.4.1).
- No write to memory may be reordered with an execution of the CLFLUSH instruction; a write may be reordered with an execution of the CLFLUSHOPT instruction that flushes a cache line other than the one being written.[1] Executions of the CLFLUSH instruction are not reordered with each other. Executions of CLFLUSHOPT that access different cache lines may be reordered with each other. An execution of CLFLUSHOPT may be reordered with an execution of CLFLUSH that accesses a different cache line.
- Reads may be reordered with older writes to different locations but not with older writes to the same location.
- Reads or writes cannot be reordered with I/O instructions, locked instructions, or serializing instructions.

1. Earlier versions of this manual specified that writes to memory may be reordered with executions of the CLFLUSH instruction. No processors implementing the CLFLUSH instruction allow such reordering.

- Reads cannot pass earlier LFENCE and MFENCE instructions.
- Writes and executions of CLFLUSH and CLFLUSHOPT cannot pass earlier LFENCE, SFENCE, and MFENCE instructions.
- LFENCE instructions cannot pass earlier reads.
- SFENCE instructions cannot pass earlier writes or executions of CLFLUSH and CLFLUSHOPT.
- MFENCE instructions cannot pass earlier reads, writes, or executions of CLFLUSH and CLFLUSHOPT.

In a multiple-processor system, the following ordering principles apply:

- Individual processors use the same ordering principles as in a single-processor system.
- Writes by a single processor are observed in the same order by all processors.
- Writes from an individual processor are NOT ordered with respect to the writes from other processors.
- Memory ordering obeys causality (memory ordering respects transitive visibility).
- Any two stores are seen in a consistent order by processors other than those performing the stores
- Locked instructions have a total order.

See the example in Figure 9-1. Consider three processors in a system and each processor performs three writes, one to each of three defined locations (A, B, and C). Individually, the processors perform the writes in the same program order, but because of bus arbitration and other memory access mechanisms, the order that the three processors write the individual memory locations can differ each time the respective code sequences are executed on the processors. The final values in location A, B, and C would possibly vary on each execution of the write sequence.

The processor-ordering model described in this section is virtually identical to that used by the Pentium and Intel486 processors. The only enhancements in the Pentium 4, Intel Xeon, and P6 family processors are:

- Added support for speculative reads, while still adhering to the ordering principles above.
- Store-buffer forwarding, when a read passes a write to the same memory location.
- Out of order store from long string store and string move operations (see Section 9.2.4, "Fast-String Operation and Out-of-Order Stores," below).

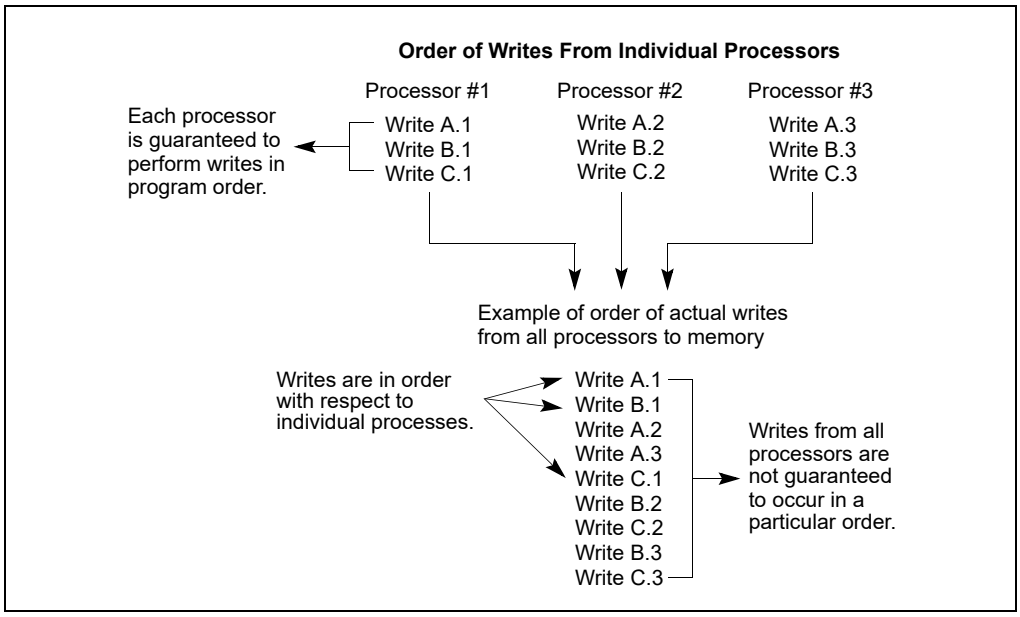

Figure 9-1. Example of Write Ordering in Multiple-Processor Systems

NOTE

In P6 processor family, store-buffer forwarding to reads of WC memory from streaming stores to the same address does not occur due to errata.

9.2.3 Examples Illustrating the Memory-Ordering Principles

This section provides a set of examples that illustrate the behavior of the memory-ordering principles introduced in Section 9.2.2. They are designed to give software writers an understanding of how memory ordering may affect the results of different sequences of instructions.

These examples are limited to accesses to memory regions defined as write-back cacheable (WB). (Section 9.2.3.1 describes other limitations on the generality of the examples.) The reader should understand that they describe only software-visible behavior. A logical processor may reorder two accesses even if one of examples indicates that they may not be reordered. Such an example states only that software cannot detect that such a reordering occurred. Similarly, a logical processor may execute a memory access more than once as long as the behavior visible to software is consistent with a single execution of the memory access.

9.2.3.1 Assumptions, Terminology, and Notation

As noted above, the examples in this section are limited to accesses to memory regions defined as write-back cacheable (WB). They apply only to ordinary loads stores and to locked read-modify-write instructions. They do not necessarily apply to any of the following: out-of-order stores for string instructions (see Section 9.2.4); accesses with a non-temporal hint; reads from memory by the processor as part of address translation (e.g., page walks); and updates to segmentation and paging structures by the processor (e.g., to update "accessed" bits).

The principles underlying the examples in this section apply to individual memory accesses and to locked read-modify-write instructions. The Intel-64 memory-ordering model guarantees that, for each of the following memory-access instructions, the constituent memory operation appears to execute as a single memory access:

- Instructions that read or write a single byte.
- Instructions that read or write a word (2 bytes) whose address is aligned on a 2 byte boundary.
- Instructions that read or write a doubleword (4 bytes) whose address is aligned on a 4 byte boundary.
- Instructions that read or write a quadword (8 bytes) whose address is aligned on an 8 byte boundary.

Any locked instruction (either the XCHG instruction or another read-modify-write instruction with a LOCK prefix) appears to execute as an indivisible and uninterruptible sequence of load(s) followed by store(s) regardless of alignment.

Other instructions may be implemented with multiple memory accesses. From a memory-ordering point of view, there are no guarantees regarding the relative order in which the constituent memory accesses are made. There is also no guarantee that the constituent operations of a store are executed in the same order as the constituent operations of a load.

Section 9.2.3.2 through Section 9.2.3.7 give examples using the MOV instruction. The principles that underlie these examples apply to load and store accesses in general and to other instructions that load from or store to memory. Section 9.2.3.8 and Section 9.2.3.9 give examples using the XCHG instruction. The principles that underlie these examples apply to other locked read-modify-write instructions.

This section uses the term "processor" is to refer to a logical processor. The examples are written using Intel-64 assembly-language syntax and use the following notational conventions:

- Arguments beginning with an "r", such as r1 or r2 refer to registers (e.g., EAX) visible only to the processor being considered.
- Memory locations are denoted with x, y, z.
- Stores are written as *mov [_x], val*, which implies that *val* is being stored into the memory location *x*.
- Loads are written as *mov r, [_x]*, which implies that the contents of the memory location *x* are being loaded into the register *r*.

As noted earlier, the examples refer only to software visible behavior. When the succeeding sections make statement such as "the two stores are reordered," the implication is only that "the two stores appear to be reordered from the point of view of software."

9.2.3.2 Neither Loads Nor Stores Are Reordered with Like Operations

The Intel-64 memory-ordering model allows neither loads nor stores to be reordered with the same kind of operation. That is, it ensures that loads are seen in program order and that stores are seen in program order. This is illustrated by the following example:

Example 9-1. Stores Are Not Reordered with Other Stores

Processor 0	Processor 1
mov [_x], 1 mov [_y], 1	mov r1, [_y] mov r2, [_x]
Initially x = y = 0 r1 = 1 and r2 = 0 is not allowed	

The disallowed return values could be exhibited only if processor 0's two stores are reordered (with the two loads occurring between them) or if processor 1's two loads are reordered (with the two stores occurring between them).

If r1 = 1, the store to y occurs before the load from y. Because the Intel-64 memory-ordering model does not allow stores to be reordered, the earlier store to x occurs before the load from y. Because the Intel-64 memory-ordering model does not allow loads to be reordered, the store to x also occurs before the later load from x. This r2 = 1.

9.2.3.3 Stores Are Not Reordered With Earlier Loads

The Intel-64 memory-ordering model ensures that a store by a processor may not occur before a previous load by the same processor. This is illustrated by the following example:

Example 9-2. Stores Are Not Reordered with Older Loads

Processor 0	Processor 1
mov r1, [_x] mov [_y], 1	mov r2, [_y] mov [_x], 1
Initially x = y = 0 r1 = 1 and r2 = 1 is not allowed	

Assume r1 = 1.

- Because r1 = 1, processor 1's store to x occurs before processor 0's load from x.
- Because the Intel-64 memory-ordering model prevents each store from being reordered with the earlier load by the same processor, processor 1's load from y occurs before its store to x.
- Similarly, processor 0's load from x occurs before its store to y.
- Thus, processor 1's load from y occurs before processor 0's store to y, implying r2 = 0.

9.2.3.4 Loads May Be Reordered with Earlier Stores to Different Locations

The Intel-64 memory-ordering model allows a load to be reordered with an earlier store to a different location. However, loads are not reordered with stores to the same location.

The fact that a load may be reordered with an earlier store to a different location is illustrated by the following example:

Example 9-3. Loads May be Reordered with Older Stores

Processor 0	Processor 1
mov [_x], 1 mov r1, [_y]	mov [_y], 1 mov r2, [_x]
Initially x = y = 0 r1 = 0 and r2 = 0 is allowed	

At each processor, the load and the store are to different locations and hence may be reordered. Any interleaving of the operations is thus allowed. One such interleaving has the two loads occurring before the two stores. This would result in each load returning value 0.

The fact that a load may not be reordered with an earlier store to the same location is illustrated by the following example:

Example 9-4. Loads Are not Reordered with Older Stores to the Same Location

Processor 0
mov [_x], 1 mov r1, [_x]
Initially x = 0 r1 = 0 is not allowed

The Intel-64 memory-ordering model does not allow the load to be reordered with the earlier store because the accesses are to the same location. Therefore, r1 = 1 must hold.

9.2.3.5 Intra-Processor Forwarding Is Allowed

The memory-ordering model allows concurrent stores by two processors to be seen in different orders by those two processors; specifically, each processor may perceive its own store occurring before that of the other. This is illustrated by the following example:

Example 9-5. Intra-Processor Forwarding is Allowed

Processor 0	Processor 1
mov [_x], 1 mov r1, [_x] mov r2, [_y]	mov [_y], 1 mov r3, [_y] mov r4, [_x]
Initially x = y = 0 r2 = 0 and r4 = 0 is allowed	

The memory-ordering model imposes no constraints on the order in which the two stores appear to execute by the two processors. This fact allows processor 0 to see its store before seeing processor 1's, while processor 1 sees its store before seeing processor 0's. (Each processor is self consistent.) This allows r2 = 0 and r4 = 0.

In practice, the reordering in this example can arise as a result of store-buffer forwarding. While a store is temporarily held in a processor's store buffer, it can satisfy the processor's own loads but is not visible to (and cannot satisfy) loads by other processors.

9.2.3.6 Stores Are Transitively Visible

The memory-ordering model ensures transitive visibility of stores; stores that are causally related appear to all processors to occur in an order consistent with the causality relation. This is illustrated by the following example:

Example 9-6. Stores Are Transitively Visible

Processor 0	Processor 1	Processor 2
mov [_x], 1	mov r1, [_x] mov [_y], 1	 mov r2, [_y] mov r3, [_x]
Initially x = y = 0 r1 = 1, r2 = 1, r3 = 0 is not allowed		

Assume that r1 = 1 and r2 = 1.

- Because r1 = 1, processor 0's store occurs before processor 1's load.
- Because the memory-ordering model prevents a store from being reordered with an earlier load (see Section 9.2.3.3), processor 1's load occurs before its store. Thus, processor 0's store causally precedes processor 1's store.
- Because processor 0's store causally precedes processor 1's store, the memory-ordering model ensures that processor 0's store appears to occur before processor 1's store from the point of view of all processors.
- Because r2 = 1, processor 1's store occurs before processor 2's load.
- Because the Intel-64 memory-ordering model prevents loads from being reordered (see Section 9.2.3.2), processor 2's load occur in order.
- The above items imply that processor 0's store to x occurs before processor 2's load from x. This implies that r3 = 1.

9.2.3.7 Stores Are Seen in a Consistent Order by Other Processors

As noted in Section 9.2.3.5, the memory-ordering model allows stores by two processors to be seen in different orders by those two processors. However, any two stores must appear to execute in the same order to all processors other than those performing the stores. This is illustrated by the following example:

Example 9-7. Stores Are Seen in a Consistent Order by Other Processors

Processor 0	Processor 1	Processor 2	Processor 3
mov [_x], 1	mov [_y], 1	mov r1, [_x] mov r2, [_y]	mov r3, [_y] mov r4, [_x]
Initially x = y =0 r1 = 1, r2 = 0, r3 = 1, r4 = 0 is not allowed			

By the principles discussed in Section 9.2.3.2,

- processor 2's first and second load cannot be reordered,
- processor 3's first and second load cannot be reordered.
- If r1 = 1 and r2 = 0, processor 0's store appears to precede processor 1's store with respect to processor 2.
- Similarly, r3 = 1 and r4 = 0 imply that processor 1's store appears to precede processor 0's store with respect to processor 1.

Because the memory-ordering model ensures that any two stores appear to execute in the same order to all processors (other than those performing the stores), this set of return values is not allowed

9.2.3.8 Locked Instructions Have a Total Order

The memory-ordering model ensures that all processors agree on a single execution order of all locked instructions, including those that are larger than 8 bytes or are not naturally aligned. This is illustrated by the following example:

Example 9-8. Locked Instructions Have a Total Order

Processor 0	Processor 1	Processor 2	Processor 3
xchg [_x], r1	xchg [_y], r2	mov r3, [_x] mov r4, [_y]	mov r5, [_y] mov r6, [_x]
Initially r1 = r2 = 1, x = y = 0 r3 = 1, r4 = 0, r5 = 1, r6 = 0 is not allowed			

Processor 2 and processor 3 must agree on the order of the two executions of XCHG. Without loss of generality, suppose that processor 0's XCHG occurs first.

- If r5 = 1, processor 1's XCHG into y occurs before processor 3's load from y.
- Because the Intel-64 memory-ordering model prevents loads from being reordered (see Section 9.2.3.2), processor 3's loads occur in order and, therefore, processor 1's XCHG occurs before processor 3's load from x.
- Since processor 0's XCHG into x occurs before processor 1's XCHG (by assumption), it occurs before processor 3's load from x. Thus, r6 = 1.

A similar argument (referring instead to processor 2's loads) applies if processor 1's XCHG occurs before processor 0's XCHG.

9.2.3.9 Loads and Stores Are Not Reordered with Locked Instructions

The memory-ordering model prevents loads and stores from being reordered with locked instructions that execute earlier or later. The examples in this section illustrate only cases in which a locked instruction is executed before a load or a store. The reader should note that reordering is prevented also if the locked instruction is executed after a load or a store.

The first example illustrates that loads may not be reordered with earlier locked instructions:

Example 9-9. Loads Are not Reordered with Locks

Processor 0	Processor 1
xchg [_x], r1 mov r2, [_y]	xchg [_y], r3 mov r4, [_x]
Initially x = y = 0, r1 = r3 = 1 r2 = 0 and r4 = 0 is not allowed	

As explained in Section 9.2.3.8, there is a total order of the executions of locked instructions. Without loss of generality, suppose that processor 0's XCHG occurs first.

Because the Intel-64 memory-ordering model prevents processor 1's load from being reordered with its earlier XCHG, processor 0's XCHG occurs before processor 1's load. This implies r4 = 1.

A similar argument (referring instead to processor 2's accesses) applies if processor 1's XCHG occurs before processor 0's XCHG.

The second example illustrates that a store may not be reordered with an earlier locked instruction:

Example 9-10. Stores Are not Reordered with Locks

Processor 0	Processor 1
xchg [_x], r1 mov [_y], 1	mov r2, [_y] mov r3, [_x]

Example 9-10. Stores Are not Reordered with Locks

Processor 0	Processor 1
Initially x = y = 0, r1 = 1 r2 = 1 and r3 = 0 is not allowed	

Assume r2 = 1.

- Because r2 = 1, processor 0's store to y occurs before processor 1's load from y.
- Because the memory-ordering model prevents a store from being reordered with an earlier locked instruction, processor 0's XCHG into x occurs before its store to y. Thus, processor 0's XCHG into x occurs before processor 1's load from y.
- Because the memory-ordering model prevents loads from being reordered (see Section 9.2.3.2), processor 1's loads occur in order and, therefore, processor 1's XCHG into x occurs before processor 1's load from x. Thus, r3 = 1.

9.2.4 Fast-String Operation and Out-of-Order Stores

Section 7.3.9.3 of *Intel® 64 and IA-32 Architectures Software Developer's Manual, Volume 1* described an optimization of repeated string operations called **fast-string operation**.

As explained in that section, the stores produced by fast-string operation may appear to execute out of order. Software dependent upon sequential store ordering should not use string operations for the entire data structure to be stored. Data and semaphores should be separated. Order-dependent code should write to a discrete semaphore variable after any string operations to allow correctly ordered data to be seen by all processors. Atomicity of load and store operations is guaranteed only for native data elements of the string with native data size, and only if they are included in a single cache line.

Section 9.2.4.1 and Section 9.2.4.2 provide further explain and examples.

9.2.4.1 Memory-Ordering Model for String Operations on Write-Back (WB) Memory

This section deals with the memory-ordering model for string operations on write-back (WB) memory for the Intel 64 architecture.

The memory-ordering model respects the follow principles:

1. Stores within a single string operation may be executed out of order.
2. Stores from separate string operations (for example, stores from consecutive string operations) do not execute out of order. All the stores from an earlier string operation will complete before any store from a later string operation.
3. String operations are not reordered with other store operations.

Fast string operations (e.g., string operations initiated with the MOVS/STOS instructions and the REP prefix) may be interrupted by exceptions or interrupts. The interrupts are precise but may be delayed - for example, the interruptions may be taken at cache line boundaries, after every few iterations of the loop, or after operating on every few bytes. Different implementations may choose different options, or may even choose not to delay interrupt handling, so software should not rely on the delay. When the interrupt/trap handler is reached, the source/destination registers point to the next string element to be operated on, while the EIP stored in the stack points to the string instruction, and the ECX register has the value it held following the last successful iteration. The return from that trap/interrupt handler should cause the string instruction to be resumed from the point where it was interrupted.

The string operation memory-ordering principles, (item 2 and 3 above) should be interpreted by taking the incorruptibility of fast string operations into account. For example, if a fast string operation gets interrupted after k iterations, then stores performed by the interrupt handler will become visible after the fast string stores from iteration 0 to k, and before the fast string stores from the (k+1)th iteration onward.

Stores within a single string operation may execute out of order (item 1 above) only if fast string operation is enabled. Fast string operations are enabled/disabled through the IA32_MISC_ENABLE model specific register.

9.2.4.2 Examples Illustrating Memory-Ordering Principles for String Operations

The following examples uses the same notation and convention as described in Section 9.2.3.1.

In Example 9-11, processor 0 does one round of (128 iterations) doubleword string store operation via rep:stosd, writing the value 1 (value in EAX) into a block of 512 bytes from location _x (kept in ES:EDI) in ascending order. Since each operation stores a doubleword (4 bytes), the operation is repeated 128 times (value in ECX). The block of memory initially contained 0. Processor 1 is reading two memory locations that are part of the memory block being updated by processor 0, i.e, reading locations in the range _x to (_x+511).

Example 9-11. Stores Within a String Operation May be Reordered

Processor 0	Processor 1
rep:stosd [_x]	mov r1, [_z] mov r2, [_y]
Initially on processor 0: EAX = 1, ECX=128, ES:EDI =_x Initially [_x] to 511[_x]= 0, _x <= _y < _z < _x+512 r1 = 1 and r2 = 0 is allowed	

It is possible for processor 1 to perceive that the repeated string stores in processor 0 are happening out of order. Assume that fast string operations are enabled on processor 0.

In Example 9-12, processor 0 does two separate rounds of rep stosd operation of 128 doubleword stores, writing the value 1 (value in EAX) into the first block of 512 bytes from location _x (kept in ES:EDI) in ascending order. It then writes 1 into a second block of memory from (_x+512) to (_x+1023). All of the memory locations initially contain 0. The block of memory initially contained 0. Processor 1 performs two load operations from the two blocks of memory.

Example 9-12. Stores Across String Operations Are not Reordered

Processor 0	Processor 1
rep:stosd [_x] mov ecx, $128 rep:stosd 512[_x]	 mov r1, [_z] mov r2, [_y]
Initially on processor 0: EAX = 1, ECX=128, ES:EDI =_x Initially [_x] to 1023[_x]= 0, _x <= _y < _x+512 < _z < _x+1024 r1 = 1 and r2 = 0 is not allowed	

It is not possible in the above example for processor 1 to perceive any of the stores from the later string operation (to the second 512 block) in processor 0 before seeing the stores from the earlier string operation to the first 512 block.

The above example assumes that writes to the second block (_x+512 to _x+1023) does not get executed while processor 0's string operation to the first block has been interrupted. If the string operation to the first block by processor 0 is interrupted, and a write to the second memory block is executed by the interrupt handler, then that change in the second memory block will be visible before the string operation to the first memory block resumes.

In Example 9-13, processor 0 does one round of (128 iterations) doubleword string store operation via rep:stosd, writing the value 1 (value in EAX) into a block of 512 bytes from location _x (kept in ES:EDI) in ascending order. It then writes to a second memory location outside the memory block of the previous string operation. Processor 1 performs two read operations, the first read is from an address outside the 512-byte block but to be updated by processor 0, the second ready is from inside the block of memory of string operation.

Example 9-13. String Operations Are not Reordered with later Stores

Processor 0	Processor 1
rep:stosd [_x]	mov r1, [_z]
mov [_z], $1	mov r2, [_y]
Initially on processor 0: EAX = 1, ECX=128, ES:EDI =_x	
Initially [_y] = [_z] = 0, [_x] to 511[_x]= 0, _x <= _y < _x+512, _z is a separate memory location	
r1 = 1 and r2 = 0 is not allowed	

Processor 1 cannot perceive the later store by processor 0 until it sees all the stores from the string operation. Example 9-13 assumes that processor 0's store to [_z] is not executed while the string operation has been interrupted. If the string operation is interrupted and the store to [_z] by processor 0 is executed by the interrupt handler, then changes to [_z] will become visible before the string operation resumes.

Example 9-14 illustrates the visibility principle when a string operation is interrupted.

Example 9-14. Interrupted String Operation

Processor 0	Processor 1
rep:stosd [_x] // interrupted before es:edi reach _y	mov r1, [_z]
mov [_z], $1 // interrupt handler	mov r2, [_y]
Initially on processor 0: EAX = 1, ECX=128, ES:EDI =_x	
Initially [_y] = [_z] = 0, [_x] to 511[_x]= 0, _x <= _y < _x+512, _z is a separate memory location	
r1 = 1 and r2 = 0 is allowed	

In Example 9-14, processor 0 started a string operation to write to a memory block of 512 bytes starting at address _x. Processor 0 got interrupted after k iterations of store operations. The address _y has not yet been updated by processor 0 when processor 0 got interrupted. The interrupt handler that took control on processor 0 writes to the address _z. Processor 1 may see the store to _z from the interrupt handler, before seeing the remaining stores to the 512-byte memory block that are executed when the string operation resumes.

Example 9-15 illustrates the ordering of string operations with earlier stores. No store from a string operation can be visible before all prior stores are visible.

Example 9-15. String Operations Are not Reordered with Earlier Stores

Processor 0	Processor 1
mov [_z], $1	mov r1, [_y]
rep:stosd [_x]	mov r2, [_z]
Initially on processor 0: EAX = 1, ECX=128, ES:EDI =_x	
Initially [_y] = [_z] = 0, [_x] to 511[_x]= 0, _x <= _y < _x+512, _z is a separate memory location	
r1 = 1 and r2 = 0 is not allowed	

9.2.5 Strengthening or Weakening the Memory-Ordering Model

The Intel 64 and IA-32 architectures provide several mechanisms for strengthening or weakening the memory-ordering model to handle special programming situations. These mechanisms include:

- The I/O instructions, locked instructions, the LOCK prefix, and serializing instructions force stronger ordering on the processor.

- The SFENCE instruction (introduced to the IA-32 architecture in the Pentium III processor) and the LFENCE and MFENCE instructions (introduced in the Pentium 4 processor) provide memory-ordering and serialization capabilities for specific types of memory operations.
- The memory type range registers (MTRRs) can be used to strengthen or weaken memory ordering for specific area of physical memory (see Section 12.11, "Memory Type Range Registers (MTRRs)"). MTRRs are available only in the Pentium 4, Intel Xeon, and P6 family processors.
- The page attribute table (PAT) can be used to strengthen memory ordering for a specific page or group of pages (see Section 12.12, "Page Attribute Table (PAT)"). The PAT is available only in the Pentium 4, Intel Xeon, and Pentium III processors.

These mechanisms can be used as follows:

Memory mapped devices and other I/O devices on the bus are often sensitive to the order of writes to their I/O buffers. I/O instructions can be used to (the IN and OUT instructions) impose strong write ordering on such accesses as follows. Prior to executing an I/O instruction, the processor waits for all previous instructions in the program to complete and for all buffered writes to drain to memory. Only instruction fetch and page tables walks can pass I/O instructions. Execution of subsequent instructions do not begin until the processor determines that the I/O instruction has been completed.

Synchronization mechanisms in multiple-processor systems may depend upon a strong memory-ordering model. Here, a program can use a locked instruction such as the XCHG instruction or the LOCK prefix to ensure that a read-modify-write operation on memory is carried out atomically. Locked instructions typically operate like I/O instructions in that they wait for all previous memory accesses to complete and for all buffered writes to drain to memory (see Section 9.1.2, "Bus Locking"). Unlike I/O operations, locked instructions do not wait for all previous instructions to complete execution.

Program synchronization can also be carried out with serializing instructions (see Section 9.3). These instructions are typically used at critical procedure or task boundaries to force completion of all previous instructions before a jump to a new section of code or a context switch occurs. Like the I/O instructions, the processor waits until all previous instructions have been completed and all buffered writes have been drained to memory before executing the serializing instruction.

The SFENCE, LFENCE, and MFENCE instructions provide a performance-efficient way of ensuring load and store memory ordering between routines that produce weakly-ordered results and routines that consume that data. The functions of these instructions are as follows:

- **SFENCE** — Serializes all store (write) operations that occurred prior to the SFENCE instruction in the program instruction stream, but does not affect load operations.
- **LFENCE** — Serializes all load (read) operations that occurred prior to the LFENCE instruction in the program instruction stream, but does not affect store operations.[1]
- **MFENCE** — Serializes all store and load operations that occurred prior to the MFENCE instruction in the program instruction stream.

Note that the SFENCE, LFENCE, and MFENCE instructions provide a more efficient method of controlling memory ordering than the CPUID instruction.

The MTRRs were introduced in the P6 family processors to define the cache characteristics for specified areas of physical memory. The following are two examples of how memory types set up with MTRRs can be used strengthen or weaken memory ordering for the Pentium 4, Intel Xeon, and P6 family processors:

- The strong uncached (UC) memory type forces a strong-ordering model on memory accesses. Here, all reads and writes to the UC memory region appear on the bus and out-of-order or speculative accesses are not performed. This memory type can be applied to an address range dedicated to memory mapped I/O devices to force strong memory ordering.
- For areas of memory where weak ordering is acceptable, the write back (WB) memory type can be chosen. Here, reads can be performed speculatively and writes can be buffered and combined. For this type of memory,

1. Specifically, LFENCE does not execute until all prior instructions have completed locally, and no later instruction begins execution until LFENCE completes. As a result, an instruction that loads from memory and that precedes an LFENCE receives data from memory prior to completion of the LFENCE. An LFENCE that follows an instruction that stores to memory might complete before the data being stored have become globally visible. Instructions following an LFENCE may be fetched from memory before the LFENCE, but they will not execute until the LFENCE completes.

cache locking is performed on atomic (locked) operations that do not split across cache lines, which helps to reduce the performance penalty associated with the use of the typical synchronization instructions, such as XCHG, that lock the bus during the entire read-modify-write operation. With the WB memory type, the XCHG instruction locks the cache instead of the bus if the memory access is contained within a cache line.

The PAT was introduced in the Pentium III processor to enhance the caching characteristics that can be assigned to pages or groups of pages. The PAT mechanism typically used to strengthen caching characteristics at the page level with respect to the caching characteristics established by the MTRRs. Table 12-7 shows the interaction of the PAT with the MTRRs.

Intel recommends that software written to run on Intel Core 2 Duo, Intel Atom, Intel Core Duo, Pentium 4, Intel Xeon, and P6 family processors assume the processor-ordering model or a weaker memory-ordering model. The Intel Core 2 Duo, Intel Atom, Intel Core Duo, Pentium 4, Intel Xeon, and P6 family processors do not implement a strong memory-ordering model, except when using the UC memory type. Despite the fact that Pentium 4, Intel Xeon, and P6 family processors support processor ordering, Intel does not guarantee that future processors will support this model. To make software portable to future processors, it is recommended that operating systems provide critical region and resource control constructs and API's (application program interfaces) based on I/O, locking, and/or serializing instructions be used to synchronize access to shared areas of memory in multiple-processor systems. Also, software should not depend on processor ordering in situations where the system hardware does not support this memory-ordering model.

9.3 SERIALIZING INSTRUCTIONS

The Intel 64 and IA-32 architectures define several **serializing instructions**. These instructions force the processor to complete all modifications to flags, registers, and memory by previous instructions and to drain all buffered writes to memory before the next instruction is fetched and executed. For example, when a MOV to control register instruction is used to load a new value into control register CR0 to enable protected mode, the processor must perform a serializing operation before it enters protected mode. This serializing operation ensures that all operations that were started while the processor was in real-address mode are completed before the switch to protected mode is made.

The concept of serializing instructions was introduced into the IA-32 architecture with the Pentium processor to support parallel instruction execution. Serializing instructions have no meaning for the Intel486 and earlier processors that do not implement parallel instruction execution.

It is important to note that executing of serializing instructions on P6 and more recent processor families constrain speculative execution because the results of speculatively executed instructions are discarded. The following instructions are serializing instructions:

- **Privileged serializing instructions** — INVD, INVEPT, INVLPG, INVVPID, LGDT, LIDT, LLDT, LTR, MOV (to control register, with the exception of MOV CR8[1]), MOV (to debug register), WBINVD, and WRMSR[2].
- **Non-privileged serializing instructions** — CPUID, IRET, RSM, and SERIALIZE.

When the processor serializes instruction execution, it ensures that all pending memory transactions are completed (including writes stored in its store buffer) before it executes the next _instruction. Nothing can pass a serializing instruction and a serializing instruction cannot pass any other instruction (read, write, instruction fetch, or I/O). For example, CPUID can be executed at any privilege level to serialize instruction execution with no effect on program flow, except that the EAX, EBX, ECX, and EDX registers are modified.

The following instructions are memory-ordering instructions, not serializing instructions. These drain the data memory subsystem. They do not serialize the instruction execution stream:[3]

- **Non-privileged memory-ordering instructions** — SFENCE, LFENCE, and MFENCE.

1. MOV CR8 is not defined architecturally as a serializing instruction.
2. An execution of WRMSR to any non-serializing MSR is not serializing. Non-serializing MSRs include the following: IA32_SPEC_CTRL MSR (MSR index 48H), IA32_PRED_CMD MSR (MSR index 49H), IA32_TSX_CTRL MSR (MSR index 122H), IA32_TSC_DEADLINE MSR (MSR index 6E0H), IA32_PKRS MSR (MSR index 6E1H), IA32_HWP_REQUEST MSR (MSR index 774H), or any of the x2APIC MSRs (MSR indices 802H to 83FH).
3. LFENCE does provide some guarantees on instruction ordering. It does not execute until all prior instructions have completed locally, and no later instruction begins execution until LFENCE completes.

The SFENCE, LFENCE, and MFENCE instructions provide more granularity in controlling the serialization of memory loads and stores (see Section 9.2.5, "Strengthening or Weakening the Memory-Ordering Model").

The following additional information is worth noting regarding serializing instructions:

- The processor does not write back the contents of modified data in its data cache to external memory when it serializes instruction execution. Software can force modified data to be written back by executing the WBINVD instruction, which is a serializing instruction. The amount of time or cycles for WBINVD to complete will vary due to the size of different cache hierarchies and other factors. As a consequence, the use of the WBINVD instruction can have an impact on interrupt/event response time.
- When an instruction is executed that enables or disables paging (that is, changes the PG flag in control register CR0), the instruction should be followed by a jump instruction. The target instruction of the jump instruction is fetched with the new setting of the PG flag (that is, paging is enabled or disabled), but the jump instruction itself is fetched with the previous setting. The Pentium 4, Intel Xeon, and P6 family processors do not require the jump operation following the move to register CR0 (because any use of the MOV instruction in a Pentium 4, Intel Xeon, or P6 family processor to write to CR0 is completely serializing). However, to maintain backwards and forward compatibility with code written to run on other IA-32 processors, it is recommended that the jump operation be performed.
- Whenever an instruction is executed to change the contents of CR3 while paging is enabled, the next instruction is fetched using the translation tables that correspond to the new value of CR3. Therefore the next instruction and the sequentially following instructions should have a mapping based upon the new value of CR3. (Global entries in the TLBs are not invalidated, see Section 4.10.4, "Invalidation of TLBs and Paging-Structure Caches.")
- The Pentium processor and more recent processor families use branch-prediction techniques to improve performance by prefetching the destination of a branch instruction before the branch instruction is executed. Consequently, instruction execution is not deterministically serialized when a branch instruction is executed.

9.4 MULTIPLE-PROCESSOR (MP) INITIALIZATION

The IA-32 architecture (beginning with the P6 family processors) defines a multiple-processor (MP) initialization protocol called the *Multiprocessor Specification Version 1.4*. This specification defines the boot protocol to be used by IA-32 processors in multiple-processor systems. (Here, **multiple processors** is defined as two or more processors.) The MP initialization protocol has the following important features:

- It supports controlled booting of multiple processors without requiring dedicated system hardware.
- It allows hardware to initiate the booting of a system without the need for a dedicated signal or a predefined boot processor.
- It allows all IA-32 processors to be booted in the same manner, including those supporting Intel Hyper-Threading Technology.
- The MP initialization protocol also applies to MP systems using Intel 64 processors.

The mechanism for carrying out the MP initialization protocol differs depending on the Intel processor generations. The following bullets summarizes the evolution of the changes:

- **For P6 family or older processors supporting MP operations**— The selection of the BSP and APs (see Section 9.4.1, "BSP and AP Processors") is handled through arbitration on the APIC bus, using BIPI and FIPI messages. These processor generations have CPUID signatures of (family=06H, extended_model=0, model<=0DH), or family <06H. See Section 9.11.1, "Overview of the MP Initialization Process For P6 Family Processors" for a complete discussion of MP initialization for P6 family processors.
- **Early generations of IA processors with family 0FH** — The selection of the BSP and APs (see Section 9.4.1, "BSP and AP Processors") is handled through arbitration on the system bus, using BIPI and FIPI messages (see Section 9.4.3, "MP Initialization Protocol Algorithm for MP Systems"). These processor generations have CPUID signatures of family=0FH, model=0H, stepping<=09H.
- **Later generations of IA processors with family 0FH, and IA processors with system bus** — The selection of the BSP and APs is handled through a special system bus cycle, without using BIPI and FIPI message arbitration (see Section 9.4.3, "MP Initialization Protocol Algorithm for MP Systems"). These

processor generations have CPUID signatures of family=0FH with (model=0H, stepping>=0AH) or (model >0, all steppings); or family=06H, extended_model=0, model>=0EH.

- **All other modern IA processor generations supporting MP operations**— The selection of the BSP and APs in the system is handled by platform-specific arrangement of the combination of hardware, BIOS, and/or configuration input options. The basis of the selection mechanism is similar to those of the Later generations of family 0FH and other Intel processor using system bus (see Section 9.4.3, "MP Initialization Protocol Algorithm for MP Systems"). These processor generations have CPUID signatures of family=06H, extended_model>0.

The family, model, and stepping ID for a processor is given in the EAX register when the CPUID instruction is executed with a value of 1 in the EAX register.

9.4.1 BSP and AP Processors

The MP initialization protocol defines two classes of processors: the bootstrap processor (BSP) and the application processors (APs). Following a power-up or RESET of an MP system, system hardware dynamically selects one of the processors on the system bus as the BSP. The remaining processors are designated as APs.

As part of the BSP selection mechanism, the BSP flag is set in the IA32_APIC_BASE MSR (see Figure 11-5) of the BSP, indicating that it is the BSP. This flag is cleared for all other processors.

The BSP executes the BIOS's boot-strap code to configure the APIC environment, sets up system-wide data structures, and starts and initializes the APs. When the BSP and APs are initialized, the BSP then begins executing the operating-system initialization code.

Following a power-up or reset, the APs complete a minimal self-configuration, then wait for a startup signal (a SIPI message) from the BSP processor. Upon receiving a SIPI message, an AP executes the BIOS AP configuration code, which ends with the AP being placed in halt state.

For Intel 64 and IA-32 processors supporting Intel Hyper-Threading Technology, the MP initialization protocol treats each of the logical processors on the system bus or coherent link domain as a separate processor (with a unique APIC ID). During boot-up, one of the logical processors is selected as the BSP and the remainder of the logical processors are designated as APs.

9.4.2 MP Initialization Protocol Requirements and Restrictions

The MP initialization protocol imposes the following requirements and restrictions on the system:

- The MP protocol is executed only after a power-up or RESET. If the MP protocol has completed and a BSP is chosen, subsequent INITs (either to a specific processor or system wide) do not cause the MP protocol to be repeated. Instead, each logical processor examines its BSP flag (in the IA32_APIC_BASE MSR) to determine whether it should execute the BIOS boot-strap code (if it is the BSP) or enter a wait-for-SIPI state (if it is an AP).
- All devices in the system that are capable of delivering interrupts to the processors must be inhibited from doing so for the duration of the MP initialization protocol. The time during which interrupts must be inhibited includes the window between when the BSP issues an INIT-SIPI-SIPI sequence to an AP and when the AP responds to the last SIPI in the sequence.

9.4.3 MP Initialization Protocol Algorithm for MP Systems

Following a power-up or RESET of an MP system, the processors in the system execute the MP initialization protocol algorithm to initialize each of the logical processors on the system bus or coherent link domain. In the course of executing this algorithm, the following boot-up and initialization operations are carried out:

1. Each logical processor is assigned a unique APIC ID, based on system topology. The unique ID is a 32-bit value if the processor supports CPUID leaf 0BH, otherwise the unique ID is an 8-bit value. (see Section 9.4.5, "Identifying Logical Processors in an MP System").
2. Each logical processor is assigned a unique arbitration priority based on its APIC ID.

3. Each logical processor executes its internal BIST simultaneously with the other logical processors in the system.
4. Upon completion of the BIST, the logical processors use a hardware-defined selection mechanism to select the BSP and the APs from the available logical processors on the system bus. The BSP selection mechanism differs depending on the family, model, and stepping IDs of the processors, as follows:
   — Later generations of IA processors within family 0FH (see Section 9.4), IA processors with system bus (family=06H, extended_model=0, model>=0EH), or all other modern Intel processors (family=06H, extended_model>0):
     • The logical processors begin monitoring the BNR# signal, which is toggling. When the BNR# pin stops toggling, each processor attempts to issue a NOP special cycle on the system bus.
     • The logical processor with the highest arbitration priority succeeds in issuing a NOP special cycle and is nominated the BSP. This processor sets the BSP flag in its IA32_APIC_BASE MSR, then fetches and begins executing BIOS boot-strap code, beginning at the reset vector (physical address FFFF FFF0H).
     • The remaining logical processors (that failed in issuing a NOP special cycle) are designated as APs. They leave their BSP flags in the clear state and enter a "wait-for-SIPI state."
   — Early generations of IA processors within family 0FH (family=0FH, model=0H, stepping<=09H), P6 family or older processors supporting MP operations (family=06H, extended_model=0, model<=0DH; or family <06H):
     • Each processor broadcasts a BIPI to "all including self." The first processor that broadcasts a BIPI (and thus receives its own BIPI vector), selects itself as the BSP and sets the BSP flag in its IA32_APIC_BASE MSR. (See Section 9.11.1, "Overview of the MP Initialization Process For P6 Family Processors" for a description of the BIPI, FIPI, and SIPI messages.)
     • The remainder of the processors (which were not selected as the BSP) are designated as APs. They leave their BSP flags in the clear state and enter a "wait-for-SIPI state."
     • The newly established BSP broadcasts an FIPI message to "all including self," which the BSP and APs treat as an end of MP initialization signal. Only the processor with its BSP flag set responds to the FIPI message. It responds by fetching and executing the BIOS boot-strap code, beginning at the reset vector (physical address FFFF FFF0H).
5. As part of the boot-strap code, the BSP creates an ACPI table and/or an MP table and adds its initial APIC ID to these tables as appropriate.
6. At the end of the boot-strap procedure, the BSP sets a processor counter to 1, then broadcasts a SIPI message to all the APs in the system. Here, the SIPI message contains a vector to the BIOS AP initialization code (at 000VV000H, where VV is the vector contained in the SIPI message).
7. The first action of the AP initialization code is to set up a race (among the APs) to a BIOS initialization semaphore. The first AP to the semaphore begins executing the initialization code. (See Section 9.4.4, "MP Initialization Example," for semaphore implementation details.) As part of the AP initialization procedure, the AP adds its APIC ID number to the ACPI and/or MP tables as appropriate and increments the processor counter by 1. At the completion of the initialization procedure, the AP executes a CLI instruction and halts itself.
8. When each of the APs has gained access to the semaphore and executed the AP initialization code, the BSP establishes a count for the number of processors connected to the system bus, completes executing the BIOS boot-strap code, and then begins executing operating-system boot-strap and start-up code.
9. While the BSP is executing operating-system boot-strap and start-up code, the APs remain in the halted state. In this state they will respond only to INITs, NMIs, and SMIs. They will also respond to snoops and to assertions of the STPCLK# pin.

The following section gives an example (with code) of the MP initialization protocol for of multiple processors operating in an MP configuration.

Chapter 2, "Model-Specific Registers (MSRs)" in the *Intel® 64 and IA-32 Architectures Software Developer's Manual, Volume 4* describes how to program the LINT[0:1] pins of the processor's local APICs after an MP configuration has been completed.

9.4.4 MP Initialization Example

The following example illustrates the use of the MP initialization protocol used to initialize processors in an MP system after the BSP and APs have been established. The code runs on Intel 64 or IA-32 processors that use a protocol. This includes P6 Family processors, Pentium 4 processors, Intel Core Duo, Intel Core 2 Duo and Intel Xeon processors.

The following constants and data definitions are used in the accompanying code examples. They are based on the addresses of the APIC registers defined in Table 11-1.

```
ICR_LOW         EQU 0FEE00300H
SVR             EQU 0FEE000F0H
APIC_ID         EQU 0FEE00020H
LVT3            EQU 0FEE00370H
APIC_ENABLED    EQU 0100H
BOOT_ID         DD ?
COUNT           EQU 00H
VACANT          EQU 00H
```

9.4.4.1 Typical BSP Initialization Sequence

After the BSP and APs have been selected (by means of a hardware protocol, see Section 9.4.3, "MP Initialization Protocol Algorithm for MP Systems"), the BSP begins executing BIOS boot-strap code (POST) at the normal IA-32 architecture starting address (FFFF FFF0H). The boot-strap code typically performs the following operations:

1. Initializes memory.
2. Loads the microcode update into the processor.
3. Initializes the MTRRs.
4. Enables the caches.
5. Executes the CPUID instruction with a value of 0H in the EAX register, then reads the EBX, ECX, and EDX registers to determine if the BSP is "GenuineIntel."
6. Executes the CPUID instruction with a value of 1H in the EAX register, then saves the values in the EAX, ECX, and EDX registers in a system configuration space in RAM for use later.
7. Loads start-up code for the AP to execute into a 4-KByte page in the lower 1 MByte of memory.
8. Switches to protected mode and ensures that the APIC address space is mapped to the strong uncacheable (UC) memory type.
9. Determine the BSP's APIC ID from the local APIC ID register (default is 0), the code snippet below is an example that applies to logical processors in a system whose local APIC units operate in xAPIC mode that APIC registers are accessed using memory mapped interface:

```
MOV ESI, APIC_ID; Address of local APIC ID register
MOV EAX, [ESI];
AND EAX, 0FF000000H; Zero out all other bits except APIC ID
MOV BOOT_ID, EAX; Save in memory
```

   Saves the APIC ID in the ACPI and/or MP tables and optionally in the system configuration space in RAM.
10. Converts the base address of the 4-KByte page for the AP's bootup code into 8-bit vector. The 8-bit vector defines the address of a 4-KByte page in the real-address mode address space (1-MByte space). For example, a vector of 0BDH specifies a start-up memory address of 000BD000H.
11. Enables the local APIC by setting bit 8 of the APIC spurious vector register (SVR).

```
MOV ESI, SVR; Address of SVR
MOV EAX, [ESI];
OR  EAX, APIC_ENABLED; Set bit 8 to enable (0 on reset)
MOV [ESI], EAX;
```

12. Sets up the LVT error handling entry by establishing an 8-bit vector for the APIC error handler.

```
MOV ESI, LVT3;
MOV EAX, [ESI];
AND EAX, FFFFFF00H; Clear out previous vector.
OR EAX, 000000xxH; xx is the 8-bit vector the APIC error handler.
MOV [ESI], EAX;
```

13. Initializes the Lock Semaphore variable VACANT to 00H. The APs use this semaphore to determine the order in which they execute BIOS AP initialization code.
14. Performs the following operation to set up the BSP to detect the presence of APs in the system and the number of processors (within a finite duration, minimally 100 milliseconds):
    - Sets the value of the COUNT variable to 1.
    - In the AP BIOS initialization code, the AP will increment the COUNT variable to indicate its presence. The finite duration while waiting for the COUNT to be updated can be accomplished with a timer. When the timer expires, the BSP checks the value of the COUNT variable. If the timer expires and the COUNT variable has not been incremented, no APs are present or some error has occurred.
15. Broadcasts an INIT-SIPI-SIPI IPI sequence to the APs to wake them up and initialize them. Alternatively, following a power-up or RESET, since all APs are already in the "wait-for-SIPI state," the BSP can broadcast just a single SIPI IPI to the APs to wake them up and initialize them. If software knows how many logical processors it expects to wake up, it may choose to poll the COUNT variable. If the expected processors show up before the 100 millisecond timer expires, the timer can be canceled and skip to step 16.

    The left-hand-side of the procedure illustrated in Table 9-1 provides an algorithm when the expected processor count is unknown. The right-hand-side of Table 9-1 can be used when the expected processor count is known.

Table 9-1. Broadcast INIT-SIPI-SIPI Sequence and Choice of Timeouts

INIT-SIPI-SIPI when the expected processor count is unknown	INIT-SIPI-SIPI when the expected processor count is known

MOV ESI, ICR_LOW; Load address of ICR low dword into ESI.
MOV EAX, 000C4500H; Load ICR encoding for broadcast INIT IPI
; to all APs into EAX.
MOV [ESI], EAX; Broadcast INIT IPI to all APs
; 10-millisecond delay loop.
MOV EAX, 000C46XXH; Load ICR encoding for broadcast SIPI IP
; to all APs into EAX, where xx is the vector computed in step 10.
MOV [ESI], EAX; Broadcast SIPI IPI to all APs
; 200-microsecond delay loop
MOV [ESI], EAX; Broadcast second SIPI IPI to all APs
;Waits for the timer interrupt until the timer expires
	MOV ESI, ICR_LOW; Load address of ICR low dword into ESI.
	MOV EAX, 000C4500H; Load ICR encoding for broadcast INIT IPI
	; to all APs into EAX.
	MOV [ESI], EAX; Broadcast INIT IPI to all APs
	; 10-millisecond delay loop.
	MOV EAX, 000C46XXH; Load ICR encoding for broadcast SIPI IP
	; to all APs into EAX, where xx is the vector computed in step 10.
	MOV [ESI], EAX; Broadcast SIPI IPI to all APs
	; 200 microsecond delay loop with check to see if COUNT has
	; reached the expected processor count. If COUNT reaches
	; expected processor count, cancel timer and go to step 16.
	MOV [ESI], EAX; Broadcast second SIPI IPI to all APs
	; Wait for the timer interrupt polling COUNT. If COUNT reaches
	; expected processor count, cancel timer and go to step 16.
	; If timer expires, go to step 16.

16. Reads and evaluates the COUNT variable and establishes a processor count.
17. If necessary, reconfigures the APIC and continues with the remaining system diagnostics as appropriate.

9.4.4.2 Typical AP Initialization Sequence

When an AP receives the SIPI, it begins executing BIOS AP initialization code at the vector encoded in the SIPI. The AP initialization code typically performs the following operations:

1. Waits on the BIOS initialization Lock Semaphore. When control of the semaphore is attained, initialization continues.
2. Loads the microcode update into the processor.
3. Initializes the MTRRs (using the same mapping that was used for the BSP).
4. Enables the cache.
5. Executes the CPUID instruction with a value of 0H in the EAX register, then reads the EBX, ECX, and EDX registers to determine if the AP is "GenuineIntel."
6. Executes the CPUID instruction with a value of 1H in the EAX register, then saves the values in the EAX, ECX, and EDX registers in a system configuration space in RAM for use later.
7. Switches to protected mode and ensures that the APIC address space is mapped to the strong uncacheable (UC) memory type.
8. Determines the AP's APIC ID from the local APIC ID register, and adds it to the MP and ACPI tables and optionally to the system configuration space in RAM.
9. Initializes and configures the local APIC by setting bit 8 in the SVR register and setting up the LVT3 (error LVT) for error handling (as described in steps 9 and 10 in Section 9.4.4.1, "Typical BSP Initialization Sequence").
10. Configures the APs SMI execution environment. (Each AP and the BSP must have a different SMBASE address.)
11. Increments the COUNT variable by 1.
12. Releases the semaphore.
13. Executes one of the following:
    - — the CLI and HLT instructions (if MONITOR/MWAIT is not supported), or
    - — the CLI, MONITOR, and MWAIT sequence to enter a deep C-state.
14. Waits for an INIT IPI.

9.4.5 Identifying Logical Processors in an MP System

After the BIOS has completed the MP initialization protocol, each logical processor can be uniquely identified by its local APIC ID. Software can access these APIC IDs in either of the following ways:

- **Read APIC ID for a local APIC** — Code running on a logical processor can read APIC ID in one of two ways depending on the local APIC unit is operating in x2APIC mode (see *Intel® 64 Architecture x2APIC Specification*)or in xAPIC mode:
  - — If the local APIC unit supports x2APIC and is operating in x2APIC mode, 32-bit APIC ID can be read by executing a RDMSR instruction to read the processor's x2APIC ID register. This method is equivalent to executing CPUID leaf 0BH described below.
  - — If the local APIC unit is operating in xAPIC mode, 8-bit APIC ID can be read by executing a MOV instruction to read the processor's local APIC ID register (see Section 11.4.6, "Local APIC ID"). This is the ID to use for directing physical destination mode interrupts to the processor.
- **Read ACPI or MP table** — As part of the MP initialization protocol, the BIOS creates an ACPI table and an MP table. These tables are defined in the Multiprocessor Specification Version 1.4 and provide software with a list of the processors in the system and their local APIC IDs. The format of the ACPI table is derived from the ACPI specification, which is an industry standard power management and platform configuration specification for MP systems.
- **Read Initial APIC ID** (If the processor does not support CPUID leaf 0BH) — An APIC ID is assigned to a logical processor during power up. This is the initial APIC ID reported by CPUID.1:EBX[31:24] and may be different from the current value read from the local APIC. The initial APIC ID can be used to determine the topological relationship between logical processors for multi-processor systems that do not support CPUID leaf 0BH.

Bits in the 8-bit initial APIC ID can be interpreted using several bit masks. Each bit mask can be used to extract an identifier to represent a hierarchical level of the multi-threading resource topology in an MP system (See Section 9.9.1, "Hierarchical Mapping of Shared Resources"). The initial APIC ID may consist of up to four bit-fields. In a non-clustered MP system, the field consists of up to three bit fields.

- **Read 32-bit APIC ID from CPUID leaf 0BH** (If the processor supports CPUID leaf 0BH) — A unique APIC ID is assigned to a logical processor during power up. This APIC ID is reported by CPUID.0BH:EDX[31:0] as a 32-bit value. Use the 32-bit APIC ID and CPUID leaf 0BH to determine the topological relationship between logical processors if the processor supports CPUID leaf 0BH.

  Bits in the 32-bit x2APIC ID can be extracted into sub-fields using CPUID leaf 0BH parameters. (See Section 9.9.1, "Hierarchical Mapping of Shared Resources").

Figure 9-2 shows two examples of APIC ID bit fields in earlier single-core processors. In single-core Intel Xeon processors, the APIC ID assigned to a logical processor during power-up and initialization is 8 bits. Bits 2:1 form a 2-bit physical package identifier (which can also be thought of as a socket identifier). In systems that configure physical processors in clusters, bits 4:3 form a 2-bit cluster ID. Bit 0 is used in the Intel Xeon processor MP to identify the two logical processors within the package (see Section 9.9.3, "Hierarchical ID of Logical Processors in an MP System"). For Intel Xeon processors that do not support Intel Hyper-Threading Technology, bit 0 is always set to 0; for Intel Xeon processors supporting Intel Hyper-Threading Technology, bit 0 performs the same function as it does for Intel Xeon processor MP.

For more recent multi-core processors, see Section 9.9.1, "Hierarchical Mapping of Shared Resources" for a complete description of the topological relationships between logical processors and bit field locations within an initial APIC ID across Intel 64 and IA-32 processor families.

Note the number of bit fields and the width of bit-fields are dependent on processor and platform hardware capabilities. Software should determine these at runtime. When initial APIC IDs are assigned to logical processors, the value of APIC ID assigned to a logical processor will respect the bit-field boundaries corresponding core, physical package, etc. Additional examples of the bit fields in the initial APIC ID of multi-threading capable systems are shown in Section 9.9.

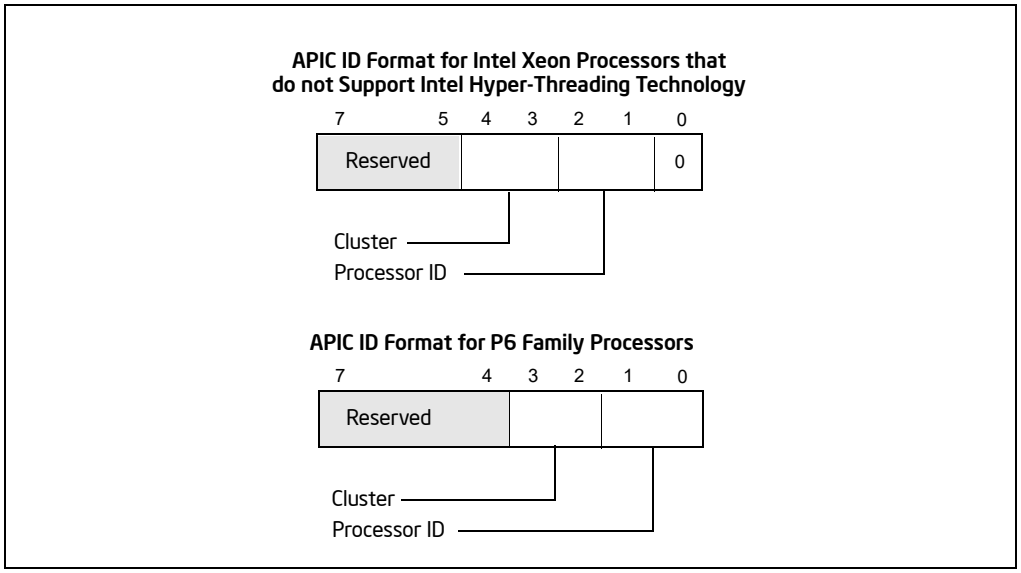

Figure 9-2. Interpretation of APIC ID in Early MP Systems

For P6 family processors, the APIC ID that is assigned to a processor during power-up and initialization is 4 bits (see Figure 9-2). Here, bits 0 and 1 form a 2-bit processor (or socket) identifier and bits 2 and 3 form a 2-bit cluster ID.

9.5 INTEL® HYPER-THREADING TECHNOLOGY AND INTEL® MULTI-CORE TECHNOLOGY

Intel Hyper-Threading Technology and Intel multi-core technology are extensions to Intel 64 and IA-32 architectures that enable a single physical processor to execute two or more separate code streams (called *threads*) concurrently. In Intel Hyper-Threading Technology, a single processor core provides two logical processors that share execution resources (see Section 9.7, "Intel® Hyper-Threading Technology Architecture"). In Intel multi-core technology, a physical processor package provides two or more processor cores. Both configurations require chipsets and a BIOS that support the technologies.

Software should not rely on processor names to determine whether a processor supports Intel Hyper-Threading Technology or Intel multi-core technology. Use the CPUID instruction to determine processor capability (see Section 9.6.2, "Initializing Multi-Core Processors").

9.6 DETECTING HARDWARE MULTI-THREADING SUPPORT AND TOPOLOGY

Use the CPUID instruction to detect the presence of hardware multi-threading support in a physical processor. Hardware multi-threading can support several varieties of multigrade and/or Intel Hyper-Threading Technology. CPUID instruction provides several sets of parameter information to aid software enumerating topology information. The relevant topology enumeration parameters provided by CPUID include:

- **Hardware Multi-Threading feature flag (CPUID.1:EDX[28] = 1)** — Indicates when set that the physical package is capable of supporting Intel Hyper-Threading Technology and/or multiple cores.
- **Processor topology enumeration parameters for 8-bit APIC ID**:
  - **Addressable IDs for Logical processors in the same Package (CPUID.1:EBX[23:16])** — Indicates the maximum number of addressable ID for logical processors in a physical package. Within a physical package, there may be addressable IDs that are not occupied by any logical processors. This parameter does not represents the hardware capability of the physical processor.[1]
- **Addressable IDs for processor cores in the same Package[2] (CPUID.(EAX=4, ECX=0[3]):EAX[31:26] + 1 = Y)** — Indicates the maximum number of addressable IDs attributable to processor cores (Y) in the physical package.
- **Extended Processor Topology Enumeration parameters for 32-bit APIC ID**: Intel 64 processors supporting CPUID leaf 0BH will assign unique APIC IDs to each logical processor in the system. CPUID leaf 0BH reports the 32-bit APIC ID and provide topology enumeration parameters. See CPUID instruction reference pages in *Intel® 64 and IA-32 Architectures Software Developer's Manual, Volume 2A*.

The CPUID feature flag may indicate support for hardware multi-threading when only one logical processor available in the package. In this case, the decimal value represented by bits 16 through 23 in the EBX register will have a value of 1.

Software should note that the number of logical processors enabled by system software may be less than the value of "Addressable IDs for Logical processors". Similarly, the number of cores enabled by system software may be less than the value of "Addressable IDs for processor cores".

Software can detect the availability of the CPUID extended topology enumeration leaf (0BH) by performing two steps:

- Check maximum input value for basic CPUID information by executing CPUID with EAX= 0. If CPUID.0H:EAX is greater than or equal or 11 (0BH), then proceed to next step,

---

1. Operating system and BIOS may implement features that reduce the number of logical processors available in a platform to applications at runtime to less than the number of physical packages times the number of hardware-capable logical processors per package.
2. Software must check CPUID for its support of leaf 4 when implementing support for multi-core. If CPUID leaf 4 is not available at runtime, software should handle the situation as if there is only one core per package.
3. Maximum number of cores in the physical package must be queried by executing CPUID with EAX=4 and a valid ECX input value. Valid ECX input values start from 0.

- Check CPUID.EAX=0BH, ECX=0H:EBX is non-zero.

If both of the above conditions are true, extended topology enumeration leaf is available. Note the presence of CPUID leaf 0BH in a processor does not guarantee support that the local APIC supports x2APIC. If CPUID.(EAX=0BH, ECX=0H):EBX returns zero and maximum input value for basic CPUID information is greater than 0BH, then CPUID.0BH leaf is not supported on that processor.

9.6.1 Initializing Processors Supporting Hyper-Threading Technology

The initialization process for an MP system that contains processors supporting Intel Hyper-Threading Technology is the same as for conventional MP systems (see Section 9.4, "Multiple-Processor (MP) Initialization"). One logical processor in the system is selected as the BSP and other processors (or logical processors) are designated as APs. The initialization process is identical to that described in Section 9.4.3, "MP Initialization Protocol Algorithm for MP Systems," and Section 9.4.4, "MP Initialization Example."

During initialization, each logical processor is assigned an APIC ID that is stored in the local APIC ID register for each logical processor. If two or more processors supporting Intel Hyper-Threading Technology are present, each logical processor on the system bus is assigned a unique ID (see Section 9.9.3, "Hierarchical ID of Logical Processors in an MP System"). Once logical processors have APIC IDs, software communicates with them by sending APIC IPI messages.

9.6.2 Initializing Multi-Core Processors

The initialization process for an MP system that contains multi-core Intel 64 or IA-32 processors is the same as for conventional MP systems (see Section 9.4, "Multiple-Processor (MP) Initialization"). A logical processor in one core is selected as the BSP; other logical processors are designated as APs.

During initialization, each logical processor is assigned an APIC ID. Once logical processors have APIC IDs, software may communicate with them by sending APIC IPI messages.

9.6.3 Executing Multiple Threads on an Intel® 64 or IA-32 Processor Supporting Hardware Multi-Threading

Upon completing the operating system boot-up procedure, the bootstrap processor (BSP) executes operating system code. Other logical processors are placed in the halt state. To execute a code stream (thread) on a halted logical processor, the operating system issues an interprocessor interrupt (IPI) addressed to the halted logical processor. In response to the IPI, the processor wakes up and begins executing the code identified by the vector received as part of the IPI.

To manage execution of multiple threads on logical processors, an operating system can use conventional symmetric multiprocessing (SMP) techniques. For example, the operating-system can use a time-slice or load balancing mechanism to periodically interrupt each of the active logical processors. Upon interrupting a logical processor, the operating system checks its run queue for a thread waiting to be executed and dispatches the thread to the interrupted logical processor.

9.6.4 Handling Interrupts on an IA-32 Processor Supporting Hardware Multi-Threading

Interrupts are handled on processors supporting Intel Hyper-Threading Technology as they are on conventional MP systems. External interrupts are received by the I/O APIC, which distributes them as interrupt messages to specific logical processors (see Figure 9-3).

Logical processors can also send IPIs to other logical processors by writing to the ICR register of its local APIC (see Section 11.6, "Issuing Interprocessor Interrupts"). This also applies to dual-core processors.

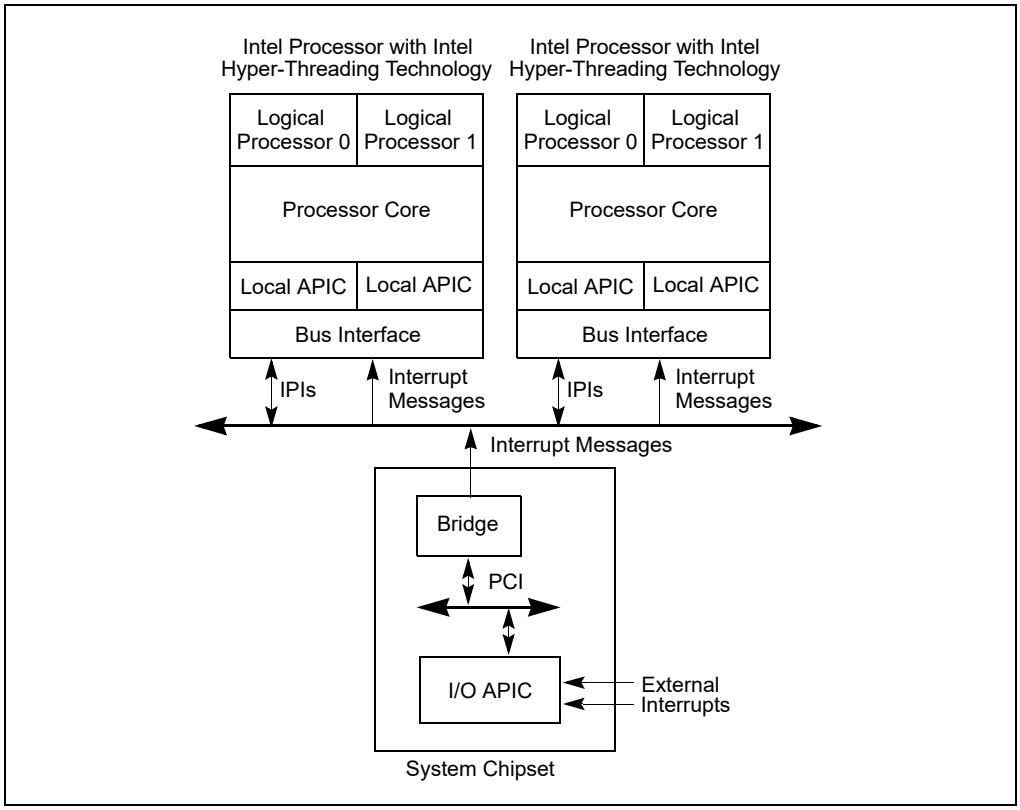

Figure 9-3. Local APICs and I/O APIC in MP System Supporting Intel HT Technology

9.7 INTEL® HYPER-THREADING TECHNOLOGY ARCHITECTURE

Figure 9-4 shows a generalized view of an Intel processor supporting Intel Hyper-Threading Technology, using the original Intel Xeon processor MP as an example. This implementation of the Intel Hyper-Threading Technology consists of two logical processors (each represented by a separate architectural state) which share the processor's execution engine and the bus interface. Each logical processor also has its own advanced programmable interrupt controller (APIC).

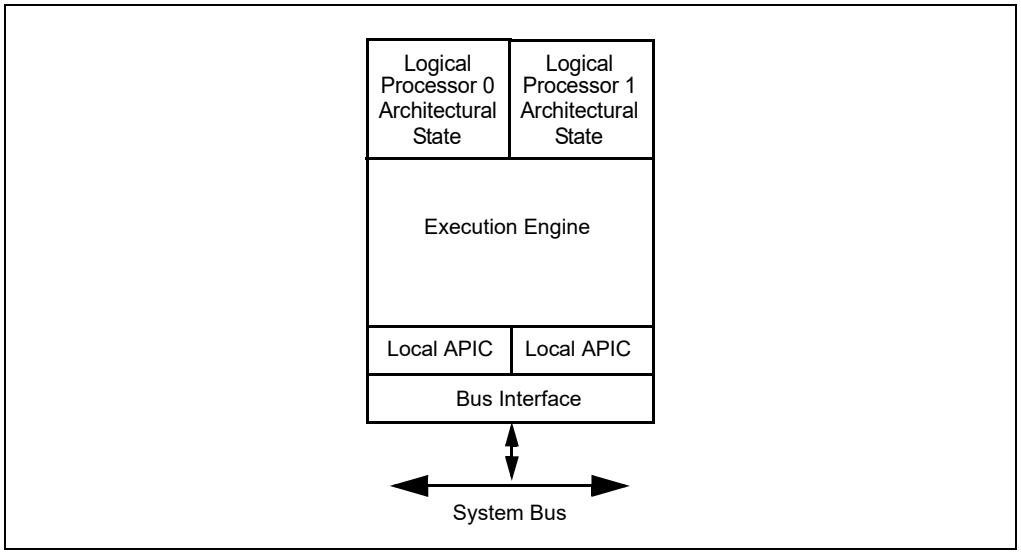

Figure 9-4. IA-32 Processor with Two Logical Processors Supporting Intel HT Technology

9.7.1 State of the Logical Processors

The following features are part of the architectural state of logical processors within Intel 64 or IA-32 processors supporting Intel Hyper-Threading Technology. The features can be subdivided into three groups:

- Duplicated for each logical processor
- Shared by logical processors in a physical processor
- Shared or duplicated, depending on the implementation

The following features are duplicated for each logical processor:

- General purpose registers (EAX, EBX, ECX, EDX, ESI, EDI, ESP, and EBP)
- Segment registers (CS, DS, SS, ES, FS, and GS)
- EFLAGS and EIP registers. Note that the CS and EIP/RIP registers for each logical processor point to the instruction stream for the thread being executed by the logical processor.
- x87 FPU registers (ST0 through ST7, status word, control word, tag word, data operand pointer, and instruction pointer)
- MMX registers (MM0 through MM7)
- XMM registers (XMM0 through XMM7) and the MXCSR register
- Control registers and system table pointer registers (GDTR, LDTR, IDTR, task register)
- Debug registers (DR0, DR1, DR2, DR3, DR6, DR7) and the debug control MSRs
- Machine check global status (IA32_MCG_STATUS) and machine check capability (IA32_MCG_CAP) MSRs
- Thermal clock modulation and ACPI Power management control MSRs
- Time stamp counter MSRs
- Most of the other MSR registers, including the page attribute table (PAT). See the exceptions below.
- Local APIC registers.
- Additional general purpose registers (R8-R15), XMM registers (XMM8-XMM15), control register, IA32_EFER on Intel 64 processors.

The following features are shared by logical processors:

- Memory type range registers (MTRRs)

Whether the following features are shared or duplicated is implementation-specific:

- IA32_MISC_ENABLE MSR (MSR address 1A0H)

- Machine check architecture (MCA) MSRs (except for the IA32_MCG_STATUS and IA32_MCG_CAP MSRs)
- Performance monitoring control and counter MSRs

9.7.2 APIC Functionality

When a processor supporting Intel Hyper-Threading Technology support is initialized, each logical processor is assigned a local APIC ID (see Table 11-1). The local APIC ID serves as an ID for the logical processor and is stored in the logical processor's APIC ID register. If two or more processors supporting Intel Hyper-Threading Technology are present in a dual processor (DP) or MP system, each logical processor on the system bus is assigned a unique local APIC ID (see Section 9.9.3, "Hierarchical ID of Logical Processors in an MP System").

Software communicates with local processors using the APIC's interprocessor interrupt (IPI) messaging facility. Setup and programming for APICs is identical in processors that support and do not support Intel Hyper-Threading Technology. See Chapter 11, "Advanced Programmable Interrupt Controller (APIC)," for a detailed discussion.

9.7.3 Memory Type Range Registers (MTRR)

MTRRs in a processor supporting Intel Hyper-Threading Technology are shared by logical processors. When one logical processor updates the setting of the MTRRs, settings are automatically shared with the other logical processors in the same physical package.

The architectures require that all MP systems based on Intel 64 and IA-32 processors (this includes logical processors) must use an identical MTRR memory map. This gives software a consistent view of memory, independent of the processor on which it is running. See Section 12.11, "Memory Type Range Registers (MTRRs)," for information on setting up MTRRs.

9.7.4 Page Attribute Table (PAT)

Each logical processor has its own PAT MSR (IA32_PAT). However, as described in Section 12.12, "Page Attribute Table (PAT)," the PAT MSR settings must be the same for all processors in a system, including the logical processors.

9.7.5 Machine Check Architecture

In the Intel HT Technology context as implemented by processors based on Intel NetBurst® microarchitecture, all of the machine check architecture (MCA) MSRs (except for the IA32_MCG_STATUS and IA32_MCG_CAP MSRs) are duplicated for each logical processor. This permits logical processors to initialize, configure, query, and handle machine-check exceptions simultaneously within the same physical processor. The design is compatible with machine check exception handlers that follow the guidelines given in Chapter 16, "Machine-Check Architecture."

The IA32_MCG_STATUS MSR is duplicated for each logical processor so that its machine check in progress bit field (MCIP) can be used to detect recursion on the part of MCA handlers. In addition, the MSR allows each logical processor to determine that a machine-check exception is in progress independent of the actions of another logical processor in the same physical package.

Because the logical processors within a physical package are tightly coupled with respect to shared hardware resources, both logical processors are notified of machine check errors that occur within a given physical processor. If machine-check exceptions are enabled when a fatal error is reported, all the logical processors within a physical package are dispatched to the machine-check exception handler. If machine-check exceptions are disabled, the logical processors enter the shutdown state and assert the IERR# signal.

When enabling machine-check exceptions, the MCE flag in control register CR4 should be set for each logical processor.

On Intel Atom family processors that support Intel Hyper-Threading Technology, the MCA facilities are shared between all logical processors on the same processor core.

9.7.6 Debug Registers and Extensions

Each logical processor has its own set of debug registers (DR0, DR1, DR2, DR3, DR6, DR7) and its own debug control MSR. These can be set to control and record debug information for each logical processor independently. Each logical processor also has its own last branch records (LBR) stack.

9.7.7 Performance Monitoring Counters

Performance counters and their companion control MSRs are shared between the logical processors within a processor core for processors based on Intel NetBurst microarchitecture. As a result, software must manage the use of these resources. The performance counter interrupts, events, and precise event monitoring support can be set up and allocated on a per thread (per logical processor) basis.

See Section 20.6.4, "Performance Monitoring and Intel Hyper-Threading Technology in Processors Based on Intel NetBurst® Microarchitecture," for a discussion of performance monitoring in the Intel Xeon processor MP.

In Intel Atom processor family that support Intel Hyper-Threading Technology, the performance counters (general-purpose and fixed-function counters) and their companion control MSRs are duplicated for each logical processor.

9.7.8 IA32_MISC_ENABLE MSR

The IA32_MISC_ENABLE MSR (MSR address 1A0H) is generally shared between the logical processors in a processor core supporting Intel Hyper-Threading Technology. However, some bit fields within IA32_MISC_ENABLE MSR may be duplicated per logical processor. The partition of shared or duplicated bit fields within IA32_MISC_ENABLE is implementation dependent. Software should program duplicated fields carefully on all logical processors in the system to ensure consistent behavior.

9.7.9 Memory Ordering

The logical processors in an Intel 64 or IA-32 processor supporting Intel Hyper-Threading Technology obey the same rules for memory ordering as Intel 64 or IA-32 processors without Intel HT Technology (see Section 9.2, "Memory Ordering"). Each logical processor uses a processor-ordered memory model that can be further defined as "write-ordered with store buffer forwarding." All mechanisms for strengthening or weakening the memory-ordering model to handle special programming situations apply to each logical processor.

9.7.10 Serializing Instructions

As a general rule, when a logical processor in a processor supporting Intel Hyper-Threading Technology executes a serializing instruction, only that logical processor is affected by the operation. An exception to this rule is the execution of the WBINVD, INVD, and WRMSR instructions; and the MOV CR instruction when the state of the CD flag in control register CR0 is modified. Here, both logical processors are serialized.

9.7.11 Microcode Update Resources

In an Intel processor supporting Intel Hyper-Threading Technology, the microcode update facilities are shared between the logical processors; either logical processor can initiate an update. Each logical processor has its own BIOS signature MSR (IA32_BIOS_SIGN_ID at MSR address 8BH). When a logical processor performs an update for the physical processor, the IA32_BIOS_SIGN_ID MSRs for resident logical processors are updated with identical information. If logical processors initiate an update simultaneously, the processor core provides the necessary synchronization needed to ensure that only one update is performed at a time.

NOTE

Some processors (prior to the introduction of Intel 64 Architecture and based on Intel NetBurst microarchitecture) do not support simultaneous loading of microcode update to the sibling logical processors in the same core. All other processors support logical processors initiating an update simultaneously. Intel recommends a common approach that the microcode loader use the sequential technique described in Section 10.11.6.3.

9.7.12 Self Modifying Code

Intel processors supporting Intel Hyper-Threading Technology support self-modifying code, where data writes modify instructions cached or currently in flight. They also support cross-modifying code, where on an MP system writes generated by one processor modify instructions cached or currently in flight on another. See Section 9.1.3, "Handling Self- and Cross-Modifying Code," for a description of the requirements for self- and cross-modifying code in an IA-32 processor.

9.7.13 Implementation-Specific Intel HT Technology Facilities

The following non-architectural facilities are implementation-specific in IA-32 processors supporting Intel Hyper-Threading Technology:

- Caches
- Translation lookaside buffers (TLBs)
- Thermal monitoring facilities

The Intel Xeon processor MP implementation is described in the following sections.

9.7.13.1 Processor Caches

For processors supporting Intel Hyper-Threading Technology, the caches are shared. Any cache manipulation instruction that is executed on one logical processor has a global effect on the cache hierarchy of the physical processor. Note the following:

- **WBINVD instruction** — The entire cache hierarchy is invalidated after modified data is written back to memory. All logical processors are stopped from executing until after the write-back and invalidate operation is completed. A special bus cycle is sent to all caching agents. The amount of time or cycles for WBINVD to complete will vary due to the size of different cache hierarchies and other factors. As a consequence, the use of the WBINVD instruction can have an impact on interrupt/event response time.
- **INVD instruction** — The entire cache hierarchy is invalidated without writing back modified data to memory. All logical processors are stopped from executing until after the invalidate operation is completed. A special bus cycle is sent to all caching agents.
- **CLFLUSH and CLFLUSHOPT instructions** — The specified cache line is invalidated from the cache hierarchy after any modified data is written back to memory and a bus cycle is sent to all caching agents, regardless of which logical processor caused the cache line to be filled.
- **CD flag in control register CR0** — Each logical processor has its own CR0 control register, and thus its own CD flag in CR0. The CD flags for the two logical processors are ORed together, such that when any logical processor sets its CD flag, the entire cache is nominally disabled.

9.7.13.2 Processor Translation Lookaside Buffers (TLBs)

In processors supporting Intel Hyper-Threading Technology, data cache TLBs are shared. The instruction cache TLB may be duplicated or shared in each logical processor, depending on implementation specifics of different processor families.

Entries in the TLBs are tagged with an ID that indicates the logical processor that initiated the translation. This tag applies even for translations that are marked global using the page-global feature for memory paging. See Section 4.10, "Caching Translation Information," for information about global translations.

When a logical processor performs a TLB invalidation operation, only the TLB entries that are tagged for that logical processor are guaranteed to be flushed. This protocol applies to all TLB invalidation operations, including writes to control registers CR3 and CR4 and uses of the INVLPG instruction.

9.7.13.3 Thermal Monitor

In a processor that supports Intel Hyper-Threading Technology, logical processors share the catastrophic shutdown detector and the automatic thermal monitoring mechanism (see Section 15.8, "Thermal Monitoring and Protection"). Sharing results in the following behavior:

- If the processor's core temperature rises above the preset catastrophic shutdown temperature, the processor core halts execution, which causes both logical processors to stop execution.
- When the processor's core temperature rises above the preset automatic thermal monitor trip temperature, the frequency of the processor core is automatically modulated, which effects the execution speed of both logical processors.

For software controlled clock modulation, each logical processor has its own IA32_CLOCK_MODULATION MSR, allowing clock modulation to be enabled or disabled on a logical processor basis. Typically, if software controlled clock modulation is going to be used, the feature must be enabled for all the logical processors within a physical processor and the modulation duty cycle must be set to the same value for each logical processor. If the duty cycle values differ between the logical processors, the processor clock will be modulated at the highest duty cycle selected.

9.7.13.4 External Signal Compatibility

This section describes the constraints on external signals received through the pins of a processor supporting Intel Hyper-Threading Technology and how these signals are shared between its logical processors.

- **STPCLK#** — A single STPCLK# pin is provided on the physical package of the Intel Xeon processor MP. External control logic uses this pin for power management within the system. When the STPCLK# signal is asserted, the processor core transitions to the stop-grant state, where instruction execution is halted but the processor core continues to respond to snoop transactions. Regardless of whether the logical processors are active or halted when the STPCLK# signal is asserted, execution is stopped on both logical processors and neither will respond to interrupts.

  In MP systems, the STPCLK# pins on all physical processors are generally tied together. As a result this signal affects all the logical processors within the system simultaneously.
- **LINT0 and LINT1 pins** — A processor supporting Intel Hyper-Threading Technology has only one set of LINT0 and LINT1 pins, which are shared between the logical processors. When one of these pins is asserted, both logical processors respond unless the pin has been masked in the APIC local vector tables for one or both of the logical processors.

  Typically in MP systems, the LINT0 and LINT1 pins are not used to deliver interrupts to the logical processors. Instead all interrupts are delivered to the local processors through the I/O APIC.
- **A20M# pin** — On an IA-32 processor, the A20M# pin is typically provided for compatibility with the Intel 286 processor. Asserting this pin causes bit 20 of the physical address to be masked (forced to zero) for all external bus memory accesses. Processors supporting Intel Hyper-Threading Technology provide one A20M# pin, which affects the operation of both logical processors within the physical processor.

  The functionality of A20M# is used primarily by older operating systems and not used by modern operating systems. On newer Intel 64 processors, A20M# may be absent.

9.8 MULTI-CORE ARCHITECTURE

This section describes the architecture of Intel 64 and IA-32 processors supporting dual-core and quad-core technology. The discussion is applicable to the Intel Pentium processor Extreme Edition, Pentium D, Intel Core Duo, Intel Core 2 Duo, Dual-core Intel Xeon processor, Intel Core 2 Quad processors, and quad-core Intel Xeon processors. Features vary across different microarchitectures and are detectable using CPUID.

In general, each processor core has dedicated microarchitectural resources identical to a single-processor implementation of the underlying microarchitecture without hardware multi-threading capability. Each logical processor in a dual-core processor (whether supporting Intel Hyper-Threading Technology or not) has its own APIC functionality, PAT, machine check architecture, debug registers and extensions. Each logical processor handles serialization instructions or self-modifying code on its own. Memory order is handled the same way as in Intel Hyper-Threading Technology.

The topology of the cache hierarchy (with respect to whether a given cache level is shared by one or more processor cores or by all logical processors in the physical package) depends on the processor implementation. Software must use the deterministic cache parameter leaf of CPUID instruction to discover the cache-sharing topology between the logical processors in a multi-threading environment.

9.8.1 Logical Processor Support

The topological composition of processor cores and logical processors in a multi-core processor can be discovered using CPUID. Within each processor core, one or more logical processors may be available.

System software must follow the requirement MP initialization sequences (see Section 9.4, "Multiple-Processor (MP) Initialization") to recognize and enable logical processors. At runtime, software can enumerate those logical processors enabled by system software to identify the topological relationships between these logical processors. (See Section 9.9.5, "Identifying Topological Relationships in a MP System").

9.8.2 Memory Type Range Registers (MTRR)

MTRR is shared between two logical processors sharing a processor core if the physical processor supports Intel Hyper-Threading Technology. MTRR is not shared between logical processors located in different cores or different physical packages.

The Intel 64 and IA-32 architectures require that all logical processors in an MP system use an identical MTRR memory map. This gives software a consistent view of memory, independent of the processor on which it is running.

See Section 12.11, "Memory Type Range Registers (MTRRs)."

9.8.3 Performance Monitoring Counters

Performance counters and their companion control MSRs are shared between two logical processors sharing a processor core if the processor core supports Intel Hyper-Threading Technology and is based on Intel NetBurst microarchitecture. They are not shared between logical processors in different cores or different physical packages. As a result, software must manage the use of these resources, based on the topology of performance monitoring resources. Performance counter interrupts, events, and precise event monitoring support can be set up and allocated on a per thread (per logical processor) basis.

See Section 20.6.4, "Performance Monitoring and Intel Hyper-Threading Technology in Processors Based on Intel NetBurst® Microarchitecture."

9.8.4 IA32_MISC_ENABLE MSR

Some bit fields in IA32_MISC_ENABLE MSR (MSR address 1A0H) may be shared between two logical processors sharing a processor core, or may be shared between different cores in a physical processor. See Chapter 2, "Model-Specific Registers (MSRs)" in the *Intel® 64 and IA-32 Architectures Software Developer's Manual, Volume 4*.

9.8.5 Microcode Update Resources

Microcode update facilities are shared between two logical processors sharing a processor core if the physical package supports Intel Hyper-Threading Technology. They are not shared between logical processors in different

cores or different physical packages. Either logical processor that has access to the microcode update facility can initiate an update.

Each logical processor has its own BIOS signature MSR (IA32_BIOS_SIGN_ID at MSR address 8BH). When a logical processor performs an update for the physical processor, the IA32_BIOS_SIGN_ID MSRs for resident logical processors are updated with identical information.

All microcode update steps during processor initialization should use the same update data on all cores in all physical packages of the same stepping. Any subsequent microcode update must apply consistent update data to all cores in all physical packages of the same stepping. If the processor detects an attempt to load an older microcode update when a newer microcode update had previously been loaded, it may reject the older update to stay with the newer update.

NOTE

Some processors (prior to the introduction of Intel 64 Architecture and based on Intel NetBurst microarchitecture) do not support simultaneous loading of microcode update to the sibling logical processors in the same core. All other processors support logical processors initiating an update simultaneously. Intel recommends a common approach that the microcode loader use the sequential technique described in Section 10.11.6.3.

9.9 PROGRAMMING CONSIDERATIONS FOR HARDWARE MULTI-THREADING CAPABLE PROCESSORS

In a multi-threading environment, there may be certain hardware resources that are physically shared at some level of the hardware topology. In the multi-processor systems, typically bus and memory sub-systems are physically shared between multiple sockets. Within a hardware multi-threading capable processors, certain resources are provided for each processor core, while other resources may be provided for each logical processors (see Section 9.7, "Intel® Hyper-Threading Technology Architecture," and Section 9.8, "Multi-Core Architecture").

From a software programming perspective, control transfer of processor operation is managed at the granularity of logical processor (operating systems dispatch a runnable task by allocating an available logical processor on the platform). To manage the topology of shared resources in a multi-threading environment, it may be useful for software to understand and manage resources that are shared by more than one logical processors.

9.9.1 Hierarchical Mapping of Shared Resources

The APIC_ID value associated with each logical processor in a multi-processor system is unique (see Section 9.6, "Detecting Hardware Multi-Threading Support and Topology"). This 8-bit or 32-bit value can be decomposed into sub-fields, where each sub-field corresponds a hierarchical level of the topological mapping of hardware resources.

The decomposition of an APIC_ID may consist of several sub fields representing the topology within a physical processor package, the higher-order bits of an APIC ID may also be used by cluster vendors to represent the topology of cluster nodes of each coherent multiprocessor systems:

- **Cluster** — Some multi-threading environments consists of multiple clusters of multi-processor systems. The CLUSTER_ID sub-field is usually supported by vendor firmware to distinguish different clusters. For non-clustered systems, CLUSTER_ID is usually 0 and system topology is reduced.
- **Package** — A physical processor package mates with a socket. A package may contain one or more software visible die. The PACKAGE_ID sub-field distinguishes different physical packages within a cluster.
- **Die** — A software-visible chip inside a package. The DIE_ID sub-field distinguishes different die within a package. If there are no software visible die, the width of this bit field is 0.
- **Tile** — A set of cores, possibly within modules, that share certain resources. The TILE_ID sub-field distinguishes different tiles. If there are no software visible tiles, the width of this bit field is 0.
- **Module** — A set of cores that share certain resources. The MODULE_ID sub-field distinguishes different modules. If there are no software visible modules, the width of this bit field is 0.

- **Core** — Processor cores may be contained within modules, within tiles, on software-visible die, or appear directly at the package level. The CORE_ID sub-field distinguishes processor cores. For a single-core processor, the width of this bit field is 0.
- **SMT** — A processor core provides one or more logical processors sharing execution resources. The SMT_ID sub-field distinguishes logical processors in a core. The width of this bit field is non-zero if a processor core provides more than one logical processors.

SMT and CORE sub-fields are bit-wise contiguous in the APIC_ID field (see Figure 9-5).

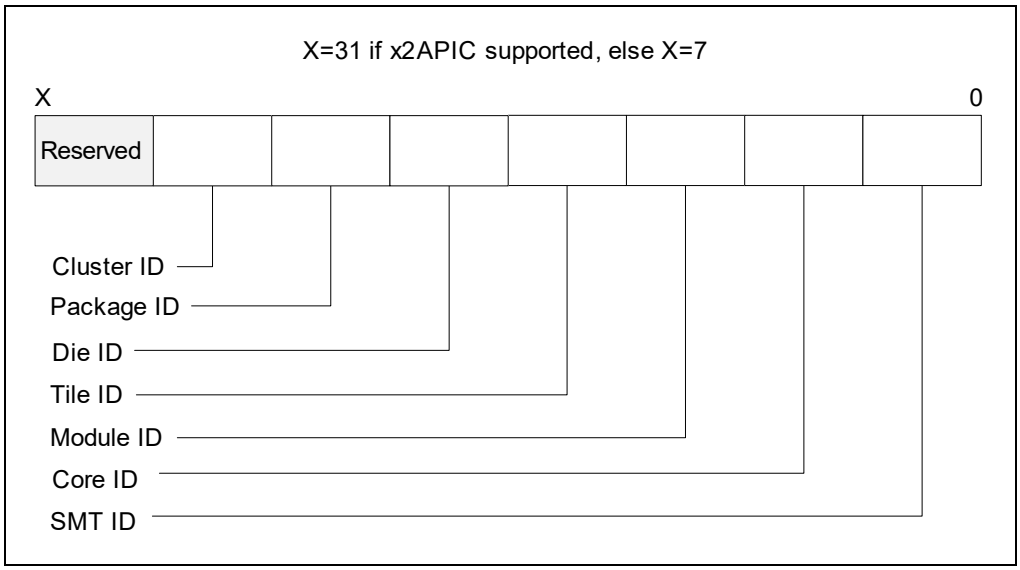

Figure 9-5. Generalized Seven Level Interpretation of the APIC ID

If the processor supports CPUID leaf 0BH and leaf 1FH, the 32-bit APIC ID can represent cluster plus several levels of topology within the physical processor package. The exact number of hierarchical levels within a physical processor package must be enumerated through CPUID leaf 0BH and leaf 1FH. Common processor families may employ topology similar to that represented by 8-bit Initial APIC ID. In general, CPUID leaf 0BH and leaf 1FH can support a topology enumeration algorithm that decompose a 32-bit APIC ID into more than four sub-fields (see Figure 9-6).

NOTE

CPUID leaf 0BH and leaf 1FH can have differences in the number of level types reported (CPUID leaf 1FH defines additional level types). If the processor supports CPUID leaf 1FH, usage of this leaf is preferred over leaf 0BH. CPUID leaf 0BH is available for legacy compatibility going forward.

The width of each sub-field depends on hardware and software configurations. Field widths can be determined at runtime using the algorithm discussed below (Example 9-16 through Example 9-21).

Figure 7-6 depicts the relationships of three of the hierarchical sub-fields in a hypothetical MP system. The value of valid APIC_IDs need not be contiguous across package boundary or core boundaries.

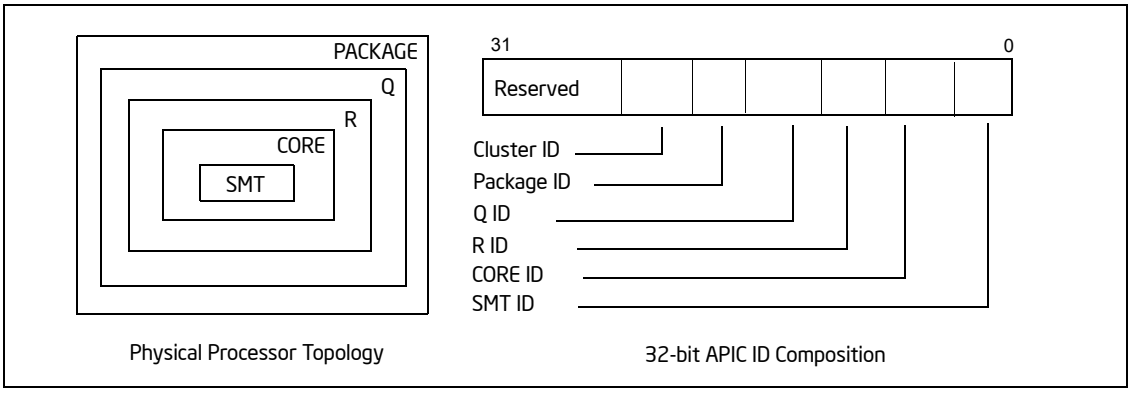

Figure 9-6. Conceptual Six-Level Topology and 32-bit APIC ID Composition

9.9.2 Hierarchical Mapping of CPUID Extended Topology Leaf

CPUID leaf 0BH and leaf 1FH provide enumeration parameters for software to identify each hierarchy of the processor topology in a deterministic manner. Each hierarchical level of the topology starting from the SMT level is represented numerically by a sub-leaf index within the CPUID 0BH leaf and 1FH leaf. Each level of the topology is mapped to a sub-field in the APIC ID, following the general relationship depicted in Figure 9-6. This mechanism allows software to query the exact number of levels within a physical processor package and the bit-width of each sub-field of x2APIC ID directly. For example,

- Starting from sub-leaf index 0 and incrementing ECX until CPUID.(EAX=0BH or 1FH, ECX=N):ECX[15:8] returns an invalid "level type" encoding. The number of levels within the physical processor package is "N" (excluding PACKAGE). Using Figure 9-6 as an example, CPUID.(EAX=0BH or 1FH, ECX=4):ECX[15:8] will report 00H, indicating sub leaf 04H is invalid. This is also depicted by a pseudo code example:

Example 9-16. Number of Levels Below the Physical Processor Package

```
Byte type = 1;
    s = 0;
    While ( type ) {
        EAX = 0BH or 1FH; // query each sub leaf of CPUID leaf 0BH or 1FH; CPUID leaf 1FH is preferred over leaf 0BH if available
        ECX = s;
        CPUID;
        type = ECX[15:8]; // examine level type encoding
        s ++;
    }
N = ECX[7:0];
```

- Sub-leaf index 0 (ECX= 0 as input) provides enumeration parameters to extract the SMT sub-field of x2APIC ID. If EAX = 0BH or 1FH, and ECX =0 is specified as input when executing CPUID, CPUID.(EAX=0BH or 1FH, ECX=0):EAX[4:0] reports a value (a right-shift count) that allow software to extract part of x2APIC ID to distinguish the next higher topological entities above the SMT level. This value also corresponds to the bit-width of the sub-field of x2APIC ID corresponding the hierarchical level with sub-leaf index 0.
- For each subsequent higher sub-leaf index m, CPUID.(EAX=0BH or 1FH, ECX=m):EAX[4:0] reports the right-shift count that will allow software to extract part of x2APIC ID to distinguish higher-level topological entities. This means the right-shift value at of sub-leaf m, corresponds to the least significant (m+1) subfields of the 32-bit x2APIC ID.

Example 9-17. BitWidth Determination of x2APIC ID Subfields

```
For m = 0, m < N, m ++;
{    cumulative_width[m] = CPUID.(EAX=0BH or 1FH, ECX= m): EAX[4:0]; }
BitWidth[0] = cumulative_width[0];
For m = 1, m < N, m ++;
    BitWidth[m] = cumulative_width[m] - cumulative_width[m-1];
```

NOTE

CPUID leaf 1FH is a preferred superset to leaf 0BH. Leaf 1FH defines additional level types, and it must be parsed by an algorithm that can handle the addition of future level types.

Previously, only the following encoding of hierarchical level types were defined: 0 (invalid), 1 (SMT), and 2 (core). With the additional hierarchical level types available (see Section 9.9.1, "Hierarchical Mapping of Shared Resources" and Figure 9-5, "Generalized Seven Level Interpretation of the APIC ID") software must not assume any "level type" encoding value to be related to any sub-leaf index, except sub-leaf 0.

Example 9-18. Support Routines for Identifying Package, Die, Core, and Logical Processors from 32-bit x2APIC ID

a. Derive the extraction bitmask for logical processors in a processor core and associated mask offset for different cores.

```
//
// This example shows how to enumerate CPU topology level types (level types may or may not be known/supported by the software)
//
// Below is the list of sample level types used in the example.
// Refer to the CPUID Leaf 1FH definition for the actual level type numbers: "V2 Extended Topology Enumeration Leaf" .
//
// SMT
// CORE
// MODULE
// TILE
// DIE
// PACKAGE
//
// The example shows how to identify and derive the extraction bitmask for the levels with identify type SMT/CORE/DIE/PACKAGE
//

int DeriveSMT_Mask_Offsets (void)
{
    IF (!HWMTSupported()) return -1;
    execute cpuid with EAX = 0BH or 1FH, ECX = 0;
    IF (returned level type encoding in EXC[15:8] does not match SMT) return -1;
    Mask_SMT_shift = EAX[4:0];                    //# bits shift right of APIC ID to distinguish different cores
    SMT_MASK =~( (-1) << Mask_SMT_shift);         //shift left to derive extraction bitmask for SMT_ID
    return 0;
}
```

b. Derive the extraction bitmask for processor cores in a physical processor package and associated mask offset for different packages.

```
int DeriveCore_Mask_Offsets (void)
{
    IF (!HWMTSupported()) return -1;
    execute cpuid with EAX = 0BH or 1FH, ECX = 0;
    WHILE( ECX[15:8] ) {                          //level type encoding is valid
        Mask_last_known_shift = EAX[4:0]
        IF (returned level type encoding in ECX[15:8] matches CORE) {
            Mask_Core_shift = EAX[4:0];
        }
        ELSE IF (returned level type encoding in ECX[15:8] matches DIE {
            Mask_Die_shift = EAX[4:0];
        }
        //
        // Keep enumerating. Check if the next level is the desired level and if not, keep enumerating until you reach a known level
        // or the invalid level ("0" level type). If there are more levels between DIE and PACKAGE, the unknown levels will be ignored
        // and treated as an extension of the last known level (i.e., DIE in this case).
        //

        ECX++;
        execute cpuid with EAX = 0BH or 1FH;
    }

    COREPlusSMT_MASK = ~( (-1) << Mask_Core_shift);
    DIEPlusCORE_MASK = ~( (-1) << Mask_Die_shift);

    //
    // Treat levels between DIE and physical package as an extension of DIE for software choosing not to implement or recognize
    // these unknown levels.
    //

    CORE_MASK = COREPlusSMT_MASK ^ SMT_MASK;
    DIE_MASK = DIEPlusCORE_MASK ^ COREPlusSMT_MASK;
    PACKAGE_MASK = (-1) << Mask_last_known_shift;

    return -1;

}
```

9.9.3 Hierarchical ID of Logical Processors in an MP System

For Intel 64 and IA-32 processors, system hardware establishes an 8-bit initial APIC ID (or 32-bit APIC ID if the processor supports CPUID leaf 0BH) that is unique for each logical processor following power-up or RESET (see Section 9.6.1). Each logical processor on the system is allocated an initial APIC ID. BIOS may implement features that tell the OS to support less than the total number of logical processors on the system bus. Those logical processors that are not available to applications at runtime are halted during the OS boot process. As a result, the number valid local APIC_IDs that can be queried by affinitizing-current-thread-context (See Example 9-23) is limited to the number of logical processors enabled at runtime by the OS boot process.

Table 9-2 shows an example of the 8-bit APIC IDs that are initially reported for logical processors in a system with four Intel Xeon MP processors that support Intel Hyper-Threading Technology (a total of 8 logical processors, each physical package has two processor cores and supports Intel Hyper-Threading Technology). Of the two logical

processors within a Intel Xeon processor MP, logical processor 0 is designated the primary logical processor and logical processor 1 as the secondary logical processor.

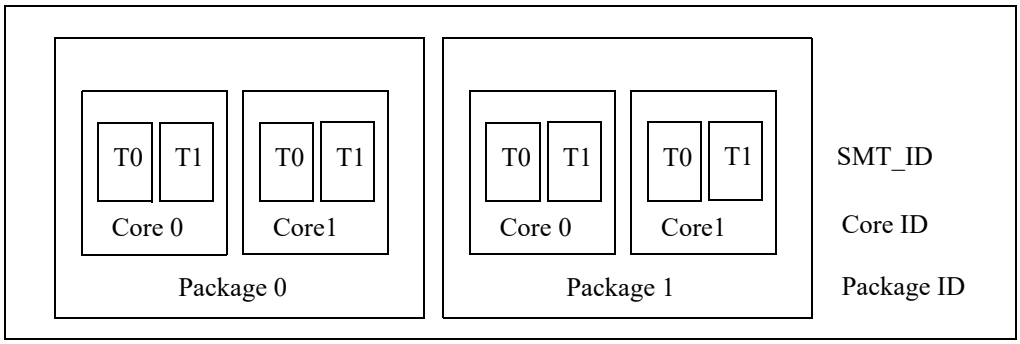

Figure 9-7. Topological Relationships between Hierarchical IDs in a Hypothetical MP Platform

Table 9-2. Initial APIC IDs for the Logical Processors in a System that has Four Intel Xeon MP Processors Supporting Intel Hyper-Threading Technology[1]

Initial APIC ID	Package ID	Core ID	SMT ID
0H	0H	0H	0H
1H	0H	0H	1H
2H	1H	0H	0H
3H	1H	0H	1H
4H	2H	0H	0H
5H	2H	0H	1H
6H	3H	0H	0H
7H	3H	0H	1H

NOTE:

1. Because information on the number of processor cores in a physical package was not available in early single-core processors supporting Intel Hyper-Threading Technology, the core ID can be treated as 0.

Table 9-3 shows the initial APIC IDs for a hypothetical situation with a dual processor system. Each physical package providing two processor cores, and each processor core also supporting Intel Hyper-Threading Technology.

Table 9-3. Initial APIC IDs for the Logical Processors in a System that has Two Physical Processors Supporting Dual-Core and Intel Hyper-Threading Technology

Initial APIC ID	Package ID	Core ID	SMT ID
0H	0H	0H	0H
1H	0H	0H	1H
2H	0H	1H	0H
3H	0H	1H	1H
4H	1H	0H	0H
5H	1H	0H	1H
6H	1H	1H	0H
7H	1H	1H	1H

9.9.3.1 Hierarchical ID of Logical Processors with x2APIC ID

Table 9-4 shows an example of possible x2APIC ID assignments for a dual processor system that support x2APIC. Each physical package providing four processor cores, and each processor core also supporting Intel Hyper-Threading Technology. Note that the x2APIC ID need not be contiguous in the system.

Table 9-4. Example of Possible x2APIC ID Assignment in a System that has Two Physical Processors Supporting x2APIC and Intel Hyper-Threading Technology

x2APIC ID	Package ID	Core ID	SMT ID
0H	0H	0H	0H
1H	0H	0H	1H
2H	0H	1H	0H
3H	0H	1H	1H
4H	0H	2H	0H
5H	0H	2H	1H
6H	0H	3H	0H
7H	0H	3H	1H
10H	1H	0H	0H
11H	1H	0H	1H
12H	1H	1H	0H
13H	1H	1H	1H
14H	1H	2H	0H
15H	1H	2H	1H
16H	1H	3H	0H
17H	1H	3H	1H

9.9.4 Algorithm for Three-Level Mappings of APIC_ID

Software can gather the initial APIC_IDs for each logical processor supported by the operating system at runtime[1] and extract identifiers corresponding to the three levels of sharing topology (package, core, and SMT). The three-level algorithms below focus on a non-clustered MP system for simplicity. They do not assume APIC IDs are contiguous or that all logical processors on the platform are enabled.

Intel supports multi-threading systems where all physical processors report identical values in CPUID leaf 0BH, CPUID.1:EBX[23:16]), CPUID.4[2]:EAX[31:26], and CPUID.4[3]:EAX[25:14]. The algorithms below assume the target system has symmetry across physical package boundaries with respect to the number of logical processors per package, number of cores per package, and cache topology within a package.

Software can choose to assume three level hierarchy if it was developed to understand only three levels. However, software implementation needs to ensure it does not break if it runs on systems that have more levels in the hierarchy even if it does not recognize them.

1. As noted in Section 9.6 and Section 9.9.3, the number of logical processors supported by the OS at runtime may be less than the total number logical processors available in the platform hardware.
2. Maximum number of addressable ID for processor cores in a physical processor is obtained by executing CPUID with EAX=4 and a valid ECX index, The ECX index start at 0.
3. Maximum number addressable ID for processor cores sharing the target cache level is obtained by executing CPUID with EAX = 4 and the ECX index corresponding to the target cache level.

The extraction algorithm (for three-level mappings from an APIC ID) uses the general procedure depicted in Example 9-19, and is supplemented by more detailed descriptions on the derivation of topology enumeration parameters for extraction bit masks:

1. Detect hardware multi-threading support in the processor.
2. Derive a set of bit masks that can extract the sub ID of each hierarchical level of the topology. The algorithm to derive extraction bit masks for SMT_ID/CORE_ID/PACKAGE_ID differs based on APIC ID is 32-bit (see step 3 below) or 8-bit (see step 4 below):
3. If the processor supports CPUID leaf 0BH, each APIC ID contains a 32-bit value, the topology enumeration parameters needed to derive three-level extraction bit masks are:
    a. Query the right-shift value for the SMT level of the topology using CPUID leaf 0BH with ECX =0H as input. The number of bits to shift-right on x2APIC ID (EAX[4:0]) can distinguish different higher-level entities above SMT (e.g., processor cores) in the same physical package. This is also the width of the bit mask to extract the SMT_ID.
    b. Enumerate until the desired level is found (i.e., processor cores). Determine if the next level is the expected level. If the next level is not known to the software, keep enumerating until the next known or the last level. Software should use the previous level before this to represent the last previously known level (i.e., processor cores). If the software does not recognize or implement certain hierarchical levels, it should assume these unknown levels as an extension of the last known level.
    c. Query CPUID leaf 0BH for the amount of bit shift to distinguish next higher-level entities (e.g., physical processor packages) in the system. This describes an explicit three-level-topology situation for commonly available processors. Consult Example 9-17 to adapt to situations beyond three-level topology of a physical processor. The width of the extraction bit mask can be used to derive the cumulative extraction bitmask to extract the sub IDs of logical processors (including different processor cores) in the same physical package. The extraction bit mask to distinguish merely different processor cores can be derived by xor'ing the SMT extraction bit mask from the cumulative extraction bit mask.
    d. Query the 32-bit x2APIC ID for the logical processor where the current thread is executing.
    e. Derive the extraction bit masks corresponding to SMT_ID, CORE_ID, and PACKAGE_ID, starting from SMT_ID.
    f. Apply each extraction bit mask to the 32-bit x2APIC ID to extract sub-field IDs.
4. If the processor does not support CPUID leaf 0BH, each initial APIC ID contains an 8-bit value, the topology enumeration parameters needed to derive extraction bit masks are:
    a. Query the size of address space for sub IDs that can accommodate logical processors in a physical processor package. This size parameters (CPUID.1:EBX[23:16]) can be used to derive the width of an extraction bitmask to enumerate the sub IDs of different logical processors in the same physical package.
    b. Query the size of address space for sub IDs that can accommodate processor cores in a physical processor package. This size parameters can be used to derive the width of an extraction bitmask to enumerate the sub IDs of processor cores in the same physical package.
    c. Query the 8-bit initial APIC ID for the logical processor where the current thread is executing.
    d. Derive the extraction bit masks using respective address sizes corresponding to SMT_ID, CORE_ID, and PACKAGE_ID, starting from SMT_ID.
    e. Apply each extraction bit mask to the 8-bit initial APIC ID to extract sub-field IDs.

Example 9-19. Support Routines for Detecting Hardware Multi-Threading and Identifying the Relationships Between Package, Core, and Logical Processors

1. Detect support for Hardware Multi-Threading Support in a processor.

```
// Returns a non-zero value if CPUID reports the presence of hardware multi-threading
// support in the physical package where the current logical processor is located.
// This does not guarantee BIOS or OS will enable all logical processors in the physical
// package and make them available to applications.
// Returns zero if hardware multi-threading is not present.

#define HWMT_BIT 10000000H

unsigned int HWMTSupported(void)
{
     // ensure cpuid instruction is supported
          execute cpuid with eax = 0 to get vendor string
          execute cpuid with eax = 1 to get feature flag and signature


     // Check to see if this a Genuine Intel Processor

     if (vendor string EQ GenuineIntel) {
          return (feature_flag_edx & HWMT_BIT); // bit 28
     }
     return 0;
}
```

Example 9-20. Support Routines for Identifying Package, Core, and Logical Processors from 32-bit x2APIC ID

a. Derive the extraction bitmask for logical processors in a processor core and associated mask offset for different cores.

```
int DeriveSMT_Mask_Offsets (void)
{
     if (!HWMTSupported()) return -1;
     execute cpuid with eax = 11, ECX = 0;
     If (returned level type encoding in ECX[15:8] does not match SMT) return -1;
     Mask_SMT_shift = EAX[4:0]; // # bits shift right of APIC ID to distinguish different cores
     SMT_MASK = ~( (-1) << Mask_SMT_shift); // shift left to derive extraction bitmask for SMT_ID
     return 0;
}
```

b. Derive the extraction bitmask for processor cores in a physical processor package and associated mask offset for different packages.

```
int DeriveCore_Mask_Offsets (void)
{
    if (!HWMTSupported()) return -1;
execute cpuid with eax = 11, ECX = 0;
    while( ECX[15:8] ) {            // level type encoding is valid
        Mask_Core_shift = EAX[4:0];      // needed to distinguish different physical packages
        ECX ++;
        execute cpuid with eax = 11;
   }
    COREPlusSMT_MASK = ~( (-1) << Mask_Core_shift);
    // treat levels between core and physical package as a core for software choosing not to implement or recognize
    // these unknown levels
    CORE_MASK = COREPlusSMT_MASK ^ SMT_MASK;
    PACKAGE_MASK = (-1) << Mask_Core_shift;
    return -1;
}
```

c. Query the x2APIC ID of a logical processor.

APIC_IDs for each logical processor.

```
unsigned char Getx2APIC_ID (void)
{
    unsigned reg_edx = 0;
    execute cpuid with eax = 11, ECX = 0
    store returned value of edx
    return (unsigned) (reg_edx) ;
}
```

Example 9-21. Support Routines for Identifying Package, Core, and Logical Processors from 8-bit Initial APIC ID

a. Find the size of address space for logical processors in a physical processor package.

```
#define NUM_LOGICAL_BITS 00FF0000H
// Use the mask above and CPUID.1.EBX[23:16] to obtain the max number of addressable IDs
// for logical processors in a physical package,

//Returns the size of address space of logical processors in a physical processor package;
// Software should not assume the value to be a power of 2.

unsigned char MaxLPIDsPerPackage(void)
{
    if (!HWMTSupported()) return 1;
execute cpuid with eax = 1
    store returned value of ebx
    return (unsigned char) ((reg_ebx & NUM_LOGICAL_BITS) >> 16);
}
```

b. Find the size of address space for processor cores in a physical processor package.

```
// Returns the max number of addressable IDs for processor cores in a physical processor package;
// Software should not assume cpuid reports this value to be a power of 2.

unsigned MaxCoreIDsPerPackage(void)
{
    if (!HWMTSupported()) return (unsigned char) 1;
    if cpuid supports leaf number 4
    { // we can retrieve multi-core topology info using leaf 4
        execute cpuid with eax = 4, ecx = 0
        store returned value of eax
        return (unsigned) ((reg_eax >> 26) +1);
    }
    else // must be a single-core processor
    return 1;
}
```

c. Query the initial APIC ID of a logical processor.

```
#define INITIAL_APIC_ID_BITS FF000000H // CPUID.1.EBX[31:24] initial APIC ID

// Returns the 8-bit unique initial APIC ID for the processor running the code.
// Software can use OS services to affinitize the current thread to each logical processor
// available under the OS to gather the initial APIC_IDs for each logical processor.

unsigned GetInitAPIC_ID (void)
{
    unsigned int reg_ebx = 0;
    execute cpuid with eax = 1
    store returned value of ebx
    return (unsigned) ((reg_ebx & INITIAL_APIC_ID_BITS) >> 24;
}
```

d. Find the width of an extraction bitmask from the maximum count of the bit-field (address size).

```
// Returns the mask bit width of a bit field from the maximum count that bit field can represent.
// This algorithm does not assume 'address size' to have a value equal to power of 2.
// Address size for SMT_ID can be calculated from MaxLPIDsPerPackage()/MaxCoreIDsPerPackage()
// Then use the routine below to derive the corresponding width of SMT extraction bitmask
// Address size for CORE_ID is MaxCoreIDsPerPackage(),
// Derive the bitwidth for CORE extraction mask similarly

unsigned FindMaskWidth(Unsigned Max_Count)
{unsigned int mask_width, cnt = Max_Count;
    __asm {
            mov eax, cnt
            mov ecx, 0
            mov mask_width, ecx
            dec eax
            bsr cx, ax
            jz next
            inc cx
            mov  mask_width, ecx
            next:
            mov eax, mask_width
        }
    return mask_width;
}
```

e. Extract a sub ID from an 8-bit full ID, using address size of the sub ID and shift count.

```
// The routine below can extract SMT_ID, CORE_ID, and PACKAGE_ID respectively from the init APIC_ID
// To extract SMT_ID, MaxSubIDvalue is set to the address size of SMT_ID, Shift_Count = 0
// To extract CORE_ID, MaxSubIDvalue is the address size of CORE_ID, Shift_Count is width of SMT extraction bitmask.
// Returns the value of the sub ID, this is not a zero-based value

Unsigned char GetSubID(unsigned char Full_ID, unsigned char MaxSubIDvalue, unsigned char Shift_Count)
{
    MaskWidth = FindMaskWidth(MaxSubIDValue);
    MaskBits = ((uchar) (FFH << Shift_Count)) ^ ((uchar) (FFH << Shift_Count + MaskWidth)) ;
    SubID = Full_ID & MaskBits;
    Return SubID;
}
```

Software must not assume local APIC_ID values in an MP system are consecutive. Non-consecutive local APIC_IDs may be the result of hardware configurations or debug features implemented in the BIOS or OS.

An identifier for each hierarchical level can be extracted from an 8-bit APIC_ID using the support routines illustrated in Example 9-21. The appropriate bit mask and shift value to construct the appropriate bit mask for each level must be determined dynamically at runtime.

9.9.5 Identifying Topological Relationships in a MP System

To detect the number of physical packages, processor cores, or other topological relationships in a MP system, the following procedures are recommended:

- Extract the three-level identifiers from the APIC ID of each logical processor enabled by system software. The sequence is as follows (See the pseudo code shown in Example 9-22 and support routines shown in Example 9-19):

- The extraction start from the right-most bit field, corresponding to SMT_ID, the innermost hierarchy in a three-level topology (See Figure 9-7). For the right-most bit field, the shift value of the working mask is zero. The width of the bit field is determined dynamically using the maximum number of logical processor per core, which can be derived from information provided from CPUID.
- To extract the next bit-field, the shift value of the working mask is determined from the width of the bit mask of the previous step. The width of the bit field is determined dynamically using the maximum number of cores per package.
- To extract the remaining bit-field, the shift value of the working mask is determined from the maximum number of logical processor per package. So the remaining bits in the APIC ID (excluding those bits already extracted in the two previous steps) are extracted as the third identifier. This applies to a non-clustered MP system, or if there is no need to distinguish between PACKAGE_ID and CLUSTER_ID.

  If there is need to distinguish between PACKAGE_ID and CLUSTER_ID, PACKAGE_ID can be extracted using an algorithm similar to the extraction of CORE_ID, assuming the number of physical packages in each node of a clustered system is symmetric.

- Assemble the three-level identifiers of SMT_ID, CORE_ID, PACKAGE_IDs into arrays for each enabled logical processor. This is shown in Example 9-23a.
- To detect the number of physical packages: use PACKAGE_ID to identify those logical processors that reside in the same physical package. This is shown in Example 9-23b. This example also depicts a technique to construct a mask to represent the logical processors that reside in the same package.
- To detect the number of processor cores: use CORE_ID to identify those logical processors that reside in the same core. This is shown in Example 9-23. This example also depicts a technique to construct a mask to represent the logical processors that reside in the same core.

In Example 9-22, the numerical ID value can be obtained from the value extracted with the mask by shifting it right by shift count. Algorithms below do not shift the value. The assumption is that the SubID values can be compared for equivalence without the need to shift.

Example 9-22. Pseudo Code Depicting Three-level Extraction Algorithm

```
For Each local_APIC_ID{
    // Calculate SMT_MASK, the bit mask pattern to extract SMT_ID,
    // SMT_MASK is determined using topology enumertaion parameters
    // from CPUID leaf 0BH (Example 9-20);
    // otherwise, SMT_MASK is determined using CPUID leaf 01H and leaf 04H (Example 9-21).
    // This algorithm assumes there is symmetry across core boundary, i.e., each core within a
    //  package has the same number of logical processors
    // SMT_ID always starts from bit 0, corresponding to the right-most bit-field
    SMT_ID = APIC_ID & SMT_MASK;

// Extract CORE_ID:
    // CORE_MASK is determined in Example 9-20 or Example 9-21
    CORE_ID = (APIC_ID & CORE_MASK) ;

    // Extract PACKAGE_ID:
    // Assume single cluster.
    // Shift out the mask width for maximum logical processors per package
    // PACKAGE_MASK is determined in Example 9-20 or Example 9-21
    PACKAGE_ID = (APIC_ID & PACKAGE_MASK) ;
}
```

Example 9-23. Compute the Number of Packages, Cores, and Processor Relationships in a MP System

a) Assemble lists of PACKAGE_ID, CORE_ID, and SMT_ID of each enabled logical processors

```
//The BIOS and/or OS may limit the number of logical processors available to applications
// after system boot. The below algorithm will compute topology for the processors visible
// to the thread that is computing it.

// Extract the 3-levels of IDs on every processor
// SystemAffinity is a bitmask of all the processors started by the OS. Use OS specific APIs to
// obtain it.
// ThreadAffinityMask is used to affinitize the topology enumeration thread to each processor
using OS specific APIs.
// Allocate per processor arrays to store the Package_ID, Core_ID, and SMT_ID for every started
// processor.

    ThreadAffinityMask = 1;
   ProcessorNum = 0;
    while (ThreadAffinityMask ≠ 0 && ThreadAffinityMask <= SystemAffinity) {
          // Check to make sure we can utilize this processor first.
          if (ThreadAffinityMask & SystemAffinity){
                Set thread to run on the processor specified in ThreadAffinityMask
                Wait if necessary and ensure thread is running on specified processor

                APIC_ID = GetAPIC_ID(); // 32 bit ID in Example 9-20 or 8-bit ID in Example 9-21
                Extract the Package_ID, Core_ID, and SMT_ID as explained in three level extraction
                      algorithm of Example 9-22
                PackageID[ProcessorNUM] = PACKAGE_ID;
                CoreID[ProcessorNum] = CORE_ID;
                SmtID[ProcessorNum] = SMT_ID;
                ProcessorNum++;
          }
          ThreadAffinityMask <<= 1;
    }
    NumStartedLPs = ProcessorNum;
```

b) Using the list of PACKAGE_ID to count the number of physical packages in a MP system and construct, for each package, a multi-bit mask corresponding to those logical processors residing in the same package.

```
    // Compute the number of packages by counting the number of processors
    // with unique PACKAGE_IDs in the PackageID array.
    // Compute the mask of processors in each package.

    PackageIDBucket is an array of unique PACKAGE_ID values. Allocate an array of
    NumStartedLPs count of entries in this array.
    PackageProcessorMask is a corresponding array of the bit mask of processors belonging to
    the same package, these are processors with the same PACKAGE_ID
    The algorithm below assumes there is symmetry across package boundary if more than
    one socket is populated in an MP system.
    // Bucket Package IDs and compute processor mask for every package.

    PackageNum = 1;
    PackageIDBucket[0] = PackageID[0];
    ProcessorMask = 1;
    PackageProcessorMask[0] = ProcessorMask;
```

```
For (ProcessorNum = 1; ProcessorNum < NumStartedLPs; ProcessorNum++) {
    ProcessorMask << = 1;
    For (i=0; i < PackageNum; i++) {
        // we may be comparing bit-fields of logical processors residing in different
        // packages, the code below assume package symmetry
        If (PackageID[ProcessorNum] = PackageIDBucket[i]) {
            PackageProcessorMask[i] |= ProcessorMask;
            Break; // found in existing bucket, skip to next iteration
        }
    }
    if (i =PackageNum) {
        //PACKAGE_ID did not match any bucket, start new bucket
        PackageIDBucket[i] = PackageID[ProcessorNum];
        PackageProcessorMask[i] = ProcessorMask;
        PackageNum++;
    }
}
// PackageNum has the number of Packages started in OS
// PackageProcessorMask[] array has the processor set of each package
```

c) Using the list of CORE_ID to count the number of cores in a MP system and construct, for each core, a multi-bit mask corresponding to those logical processors residing in the same core.

Processors in the same core can be determined by bucketing the processors with the same PACKAGE_ID and CORE_ID. Note that code below can BIT OR the values of PACKGE and CORE ID because they have not been shifted right.
The algorithm below assumes there is symmetry across package boundary if more than one socket is populated in an MP system.

```
//Bucketing PACKAGE and CORE IDs and computing processor mask for every core
    CoreNum = 1;
    CoreIDBucket[0] = PackageID[0] | CoreID[0];
    ProcessorMask = 1;
    CoreProcessorMask[0] = ProcessorMask;
    For (ProcessorNum = 1; ProcessorNum < NumStartedLPs; ProcessorNum++) {
        ProcessorMask << = 1;
        For (i=0; i < CoreNum; i++) {
            // we may be comparing bit-fields of logical processors residing in different
            // packages, the code below assume package symmetry
            If ((PackageID[ProcessorNum] | CoreID[ProcessorNum]) = CoreIDBucket[i]) {
                CoreProcessorMask[i] |= ProcessorMask;
                Break; // found in existing bucket, skip to next iteration
            }
        }
        if (i = CoreNum) {
            //Did not match any bucket, start new bucket
            CoreIDBucket[i] = PackageID[ProcessorNum] | CoreID[ProcessorNum];
            CoreProcessorMask[i] = ProcessorMask;
            CoreNum++;
        }
    }
    // CoreNum has the number of cores started in the OS
    // CoreProcessorMask[] array has the processor set of each core
```

Other processor relationships such as processor mask of sibling cores can be computed from set operations of the PackageProcessorMask[] and CoreProcessorMask[].

The algorithm shown above can be adapted to work with earlier generations of single-core IA-32 processors that support Intel Hyper-Threading Technology and in situations that the deterministic cache parameter leaf is not supported (provided CPUID supports initial APIC ID). A reference code example is available (see *Intel® 64 Architecture Processor Topology Enumeration*).

9.10 MANAGEMENT OF IDLE AND BLOCKED CONDITIONS

When a logical processor in an MP system (including multi-core processor or processors supporting Intel Hyper-Threading Technology) is idle (no work to do) or blocked (on a lock or semaphore), additional management of the core execution engine resource can be accomplished by using the HLT (halt), PAUSE, or the MONITOR/MWAIT instructions.

9.10.1 HLT Instruction

The HLT instruction stops the execution of the logical processor on which it is executed and places it in a halted state until further notice (see the description of the HLT instruction in Chapter 3 of the *Intel® 64 and IA-32 Architectures Software Developer's Manual, Volume 2A*). When a logical processor is halted, active logical processors continue to have full access to the shared resources within the physical package. Here shared resources that were being used by the halted logical processor become available to active logical processors, allowing them to execute at greater efficiency. When the halted logical processor resumes execution, shared resources are again shared among all active logical processors. (See Section 9.10.6.3, "Halt Idle Logical Processors," for more information about using the HLT instruction with processors supporting Intel Hyper-Threading Technology.)

9.10.2 PAUSE Instruction

The PAUSE instruction can improves the performance of processors supporting Intel Hyper-Threading Technology when executing "spin-wait loops" and other routines where one thread is accessing a shared lock or semaphore in a tight polling loop. When executing a spin-wait loop, the processor can suffer a severe performance penalty when exiting the loop because it detects a possible memory order violation and flushes the core processor's pipeline. The PAUSE instruction provides a hint to the processor that the code sequence is a spin-wait loop. The processor uses this hint to avoid the memory order violation and prevent the pipeline flush. In addition, the PAUSE instruction de-pipelines the spin-wait loop to prevent it from consuming execution resources excessively and consume power needlessly. (See Section 9.10.6.1, "Use the PAUSE Instruction in Spin-Wait Loops," for more information about using the PAUSE instruction with IA-32 processors supporting Intel Hyper-Threading Technology.)

9.10.3 Detecting Support MONITOR/MWAIT Instruction

Streaming SIMD Extensions 3 introduced two instructions (MONITOR and MWAIT) to help multithreaded software improve thread synchronization. In the initial implementation, MONITOR and MWAIT are available to software at ring 0. The instructions are conditionally available at levels greater than 0. Use the following steps to detect the availability of MONITOR and MWAIT:

- Use CPUID to query the MONITOR bit (CPUID.1.ECX[3] = 1).
- If CPUID indicates support, execute MONITOR inside a TRY/EXCEPT exception handler and trap for an exception. If an exception occurs, MONITOR and MWAIT are not supported at a privilege level greater than 0. See Example 9-24.

Example 9-24. Verifying MONITOR/MWAIT Support

```
boolean MONITOR_MWAIT_works = TRUE;
try {
  _asm {
    xor ecx, ecx
    xor edx, edx
    mov eax, MemArea
    monitor
    }
     // Use monitor
} except (UNWIND) {
     // if we get here, MONITOR/MWAIT is not supported
    MONITOR_MWAIT_works = FALSE;
}
```

9.10.4 MONITOR/MWAIT Instruction

Operating systems usually implement idle loops to handle thread synchronization. In a typical idle-loop scenario, there could be several "busy loops" and they would use a set of memory locations. An impacted processor waits in a loop and poll a memory location to determine if there is available work to execute. The posting of work is typically a write to memory (the work-queue of the waiting processor). The time for initiating a work request and getting it scheduled is on the order of a few bus cycles.

From a resource sharing perspective (logical processors sharing execution resources), use of the HLT instruction in an OS idle loop is desirable but has implications. Executing the HLT instruction on a idle logical processor puts the targeted processor in a non-execution state. This requires another processor (when posting work for the halted logical processor) to wake up the halted processor using an inter-processor interrupt. The posting and servicing of such an interrupt introduces a delay in the servicing of new work requests.

In a shared memory configuration, exits from busy loops usually occur because of a state change applicable to a specific memory location; such a change tends to be triggered by writes to the memory location by another agent (typically a processor).

MONITOR/MWAIT complement the use of HLT and PAUSE to allow for efficient partitioning and un-partitioning of shared resources among logical processors sharing physical resources. MONITOR sets up an effective address range that is monitored for write-to-memory activities; MWAIT places the processor in an optimized state (this may vary between different implementations) until a write to the monitored address range occurs.

In the initial implementation of MONITOR and MWAIT, they are available at CPL = 0 only.

Both instructions rely on the state of the processor's monitor hardware. The monitor hardware can be either armed (by executing the MONITOR instruction) or triggered (due to a variety of events, including a store to the monitored memory region). If upon execution of MWAIT, monitor hardware is in a triggered state: MWAIT behaves as a NOP and execution continues at the next instruction in the execution stream. The state of monitor hardware is not architecturally visible except through the behavior of MWAIT.

Multiple events other than a write to the triggering address range can cause a processor that executed MWAIT to wake up. These include events that would lead to voluntary or involuntary context switches, such as:

- External interrupts, including NMI, SMI, INIT, BINIT, MCERR, A20M#
- Faults, Aborts (including Machine Check)
- Architectural TLB invalidations including writes to CR0, CR3, CR4, and certain MSR writes; execution of LMSW (occurring prior to issuing MWAIT but after setting the monitor)
- Voluntary transitions due to fast system call and far calls (occurring prior to issuing MWAIT but after setting the monitor)

Power management related events (such as Thermal Monitor 2 or chipset driven STPCLK# assertion) will not cause the monitor event pending flag to be cleared. Faults will not cause the monitor event pending flag to be cleared.

Software should not allow for voluntary context switches in between MONITOR/MWAIT in the instruction flow. Note that execution of MWAIT does not re-arm the monitor hardware. This means that MONITOR/MWAIT need to be executed in a loop. Also note that exits from the MWAIT state could be due to a condition other than a write to the triggering address; software should explicitly check the triggering data location to determine if the write occurred. Software should also check the value of the triggering address following the execution of the monitor instruction (and prior to the execution of the MWAIT instruction). This check is to identify any writes to the triggering address that occurred during the course of MONITOR execution.

The address range provided to the MONITOR instruction must be of write-back caching type. Only write-back memory type stores to the monitored address range will trigger the monitor hardware. If the address range is not in memory of write-back type, the address monitor hardware may not be set up properly or the monitor hardware may not be armed. Software is also responsible for ensuring that

- Writes that are not intended to cause the exit of a busy loop do not write to a location within the address region being monitored by the monitor hardware,
- Writes intended to cause the exit of a busy loop are written to locations within the monitored address region.

Not doing so will lead to more false wakeups (an exit from the MWAIT state not due to a write to the intended data location). These have negative performance implications. It might be necessary for software to use padding to prevent false wakeups. CPUID provides a mechanism for determining the size data locations for monitoring as well as a mechanism for determining the size of a the pad.

9.10.5 Monitor/Mwait Address Range Determination

To use the MONITOR/MWAIT instructions, software should know the length of the region monitored by the MONITOR/MWAIT instructions and the size of the coherence line size for cache-snoop traffic in a multiprocessor system. This information can be queried using the CPUID monitor leaf function (EAX = 05H). You will need the smallest and largest monitor line size:

- To avoid missed wake-ups: make sure that the data structure used to monitor writes fits within the smallest monitor line-size. Otherwise, the processor may not wake up after a write intended to trigger an exit from MWAIT.
- To avoid false wake-ups; use the largest monitor line size to pad the data structure used to monitor writes. Software must make sure that beyond the data structure, no unrelated data variable exists in the triggering area for MWAIT. A pad may be needed to avoid this situation.

These above two values bear no relationship to cache line size in the system and software should not make any assumptions to that effect. Within a single-cluster system, the two parameters should default to be the same (the size of the monitor triggering area is the same as the system coherence line size).

Based on the monitor line sizes returned by the CPUID, the OS should dynamically allocate structures with appropriate padding. If static data structures must be used by an OS, attempt to adapt the data structure and use a dynamically allocated data buffer for thread synchronization. When the latter technique is not possible, consider not using MONITOR/MWAIT when using static data structures.

To set up the data structure correctly for MONITOR/MWAIT on multi-clustered systems: interaction between processors, chipsets, and the BIOS is required (system coherence line size may depend on the chipset used in the system; the size could be different from the processor's monitor triggering area). The BIOS is responsible to set the correct value for system coherence line size using the IA32_MONITOR_FILTER_LINE_SIZE MSR. Depending on the relative magnitude of the size of the monitor triggering area versus the value written into the IA32_MONITOR_FILTER_LINE_SIZE MSR, the smaller of the parameters will be reported as the *Smallest Monitor Line Size*. The larger of the parameters will be reported as the *Largest Monitor Line Size*.

9.10.6 Required Operating System Support

This section describes changes that must be made to an operating system to run on processors supporting Intel Hyper-Threading Technology. It also describes optimizations that can help an operating system make more efficient use of the logical processors sharing execution resources. The required changes and suggested optimizations are representative of the types of modifications that appear in Windows* XP and Linux* kernel 2.4.0 operating systems for Intel processors supporting Intel Hyper-Threading Technology. Additional optimizations for processors

supporting Intel Hyper-Threading Technology are described in the *Intel® 64 and IA-32 Architectures Optimization Reference Manual*.

9.10.6.1 Use the PAUSE Instruction in Spin-Wait Loops

Intel recommends that a PAUSE instruction be placed in all spin-wait loops that run on Intel processors supporting Intel Hyper-Threading Technology and multi-core processors.

Software routines that use spin-wait loops include multiprocessor synchronization primitives (spin-locks, semaphores, and mutex variables) and idle loops. Such routines keep the processor core busy executing a load-compare-branch loop while a thread waits for a resource to become available. Including a PAUSE instruction in such a loop greatly improves efficiency (see Section 9.10.2, "PAUSE Instruction"). The following routine gives an example of a spin-wait loop that uses a PAUSE instruction:

```
Spin_Lock:
        CMP lockvar, 0      ;Check if lock is free
        JE Get_Lock
        PAUSE               ;Short delay
        JMP Spin_Lock
Get_Lock:
        MOV EAX, 1
        XCHG EAX, lockvar ;Try to get lock
        CMP EAX, 0          ;Test if successful
        JNE Spin_Lock
Critical_Section:
        <critical section code>
        MOV lockvar, 0
        ...
Continue:
```

The spin-wait loop above uses a "test, test-and-set" technique for determining the availability of the synchronization variable. This technique is recommended when writing spin-wait loops.

In IA-32 processor generations earlier than the Pentium 4 processor, the PAUSE instruction is treated as a NOP instruction.

9.10.6.2 Potential Usage of MONITOR/MWAIT in C0 Idle Loops

An operating system may implement different handlers for different idle states. A typical OS idle loop on an ACPI-compatible OS is shown in Example 9-25:

Example 9-25. A Typical OS Idle Loop

```
// WorkQueue is a memory location indicating there is a thread
// ready to run.  A non-zero value for WorkQueue is assumed to
// indicate the presence of work to be scheduled on the processor.
// The idle loop is entered with interrupts disabled.

WHILE (1) {
    IF (WorkQueue) THEN {
        // Schedule work at WorkQueue.
        }
    ELSE {
        // No work to do - wait in appropriate C-state handler depending
        // on Idle time accumulated
        IF (IdleTime >= IdleTimeThreshhold) THEN {
            // Call appropriate C1, C2, C3 state handler, C1 handler
```

```
                // shown below
                }
        }
}
// C1 handler uses a Halt instruction
VOID C1Handler()
{   STI
    HLT
}
```

The MONITOR and MWAIT instructions may be considered for use in the C0 idle state loops, if MONITOR and MWAIT are supported.

Example 9-26. An OS Idle Loop with MONITOR/MWAIT in the C0 Idle Loop

```
// WorkQueue is a memory location indicating there is a thread
// ready to run.  A non-zero value for WorkQueue is assumed to
// indicate the presence of work to be scheduled on the processor.
// The following example assumes that the necessary padding has been
// added surrounding WorkQueue to eliminate false wakeups
// The idle loop is entered with interrupts disabled.

WHILE (1) {
    IF (WorkQueue) THEN {
        // Schedule work at WorkQueue.
        }
    ELSE {
        // No work to do - wait in appropriate C-state handler depending
        // on Idle time accumulated.
        IF (IdleTime >= IdleTimeThreshhold) THEN {
            // Call appropriate C1, C2, C3 state handler, C1
            // handler shown below
            MONITOR WorkQueue   // Setup of eax with WorkQueue
                                // LinearAddress,
                                // ECX, EDX = 0
            IF (WorkQueue = 0) THEN {
                MWAIT
                }
            }
        }
}
// C1 handler uses a Halt instruction.
VOID C1Handler()
{   STI
    HLT
}
```

9.10.6.3 Halt Idle Logical Processors

If one of two logical processors is idle or in a spin-wait loop of long duration, explicitly halt that processor by means of a HLT instruction.

In an MP system, operating systems can place idle processors into a loop that continuously checks the run queue for runnable software tasks. Logical processors that execute idle loops consume a significant amount of core's execution resources that might otherwise be used by the other logical processors in the physical package. For this reason, halting idle logical processors optimizes the performance.[1] If all logical processors within a physical package are halted, the processor will enter a power-saving state.

9.10.6.4 Potential Usage of MONITOR/MWAIT in C1 Idle Loops

An operating system may also consider replacing HLT with MONITOR/MWAIT in its C1 idle loop. An example is shown in Example 9-27:

Example 9-27. An OS Idle Loop with MONITOR/MWAIT in the C1 Idle Loop

```
// WorkQueue is a memory location indicating there is a thread
// ready to run.  A non-zero value for WorkQueue is assumed to
// indicate the presence of work to be scheduled on the processor.
// The following example assumes that the necessary padding has been
// added surrounding WorkQueue to eliminate false wakeups
// The idle loop is entered with interrupts disabled.

WHILE (1) {
    IF (WorkQueue) THEN {
        // Schedule work at WorkQueue
        }
    ELSE {
        // No work to do - wait in appropriate C-state handler depending
        // on Idle time accumulated
        IF (IdleTime >= IdleTimeThreshhold) THEN {
        // Call appropriate C1, C2, C3 state handler, C1
        // handler shown below
        }
    }
}

VOID C1Handler()

{   MONITOR WorkQueue   // Setup of eax with WorkQueue LinearAddress,
                        // ECX, EDX = 0
    IF (WorkQueue = 0) THEN {
        STI
        MWAIT          // EAX, ECX = 0
        }
}
```

9.10.6.5 Guidelines for Scheduling Threads on Logical Processors Sharing Execution Resources

Because the logical processors, the order in which threads are dispatched to logical processors for execution can affect the overall efficiency of a system. The following guidelines are recommended for scheduling threads for execution.

- Dispatch threads to one logical processor per processor core before dispatching threads to the other logical processor sharing execution resources in the same processor core.
- In an MP system with two or more physical packages, distribute threads out over all the physical processors, rather than concentrate them in one or two physical processors.
- Use processor affinity to assign a thread to a specific processor core or package, depending on the cache-sharing topology. The practice increases the chance that the processor's caches will contain some of the thread's code and data when it is dispatched for execution after being suspended.

---

1. Excessive transitions into and out of the HALT state could also incur performance penalties. Operating systems should evaluate the performance trade-offs for their operating system.

9.10.6.6 Eliminate Execution-Based Timing Loops

Intel discourages the use of timing loops that depend on a processor's execution speed to measure time. There are several reasons:

- Timing loops cause problems when they are calibrated on a IA-32 processor running at one frequency and then executed on a processor running at another frequency.
- Routines for calibrating execution-based timing loops produce unpredictable results when run on an IA-32 processor supporting Intel Hyper-Threading Technology. This is due to the sharing of execution resources between the logical processors within a physical package.

To avoid the problems described, timing loop routines must use a timing mechanism for the loop that does not depend on the execution speed of the logical processors in the system. The following sources are generally available:

- A high resolution system timer (for example, an Intel 8254).
- A high resolution timer within the processor (such as, the local APIC timer or the time-stamp counter).

For additional information, see the *Intel® 64 and IA-32 Architectures Optimization Reference Manual*.

9.10.6.7 Place Locks and Semaphores in Aligned, 128-Byte Blocks of Memory

When software uses locks or semaphores to synchronize processes, threads, or other code sections; Intel recommends that only one lock or semaphore be present within a cache line (or 128 byte sector, if 128-byte sector is supported). In processors based on Intel NetBurst microarchitecture (which support 128-byte sector consisting of two cache lines), following this recommendation means that each lock or semaphore should be contained in a 128-byte block of memory that begins on a 128-byte boundary. The practice minimizes the bus traffic required to service locks.

9.11 MP INITIALIZATION FOR P6 FAMILY PROCESSORS

This section describes the MP initialization process for systems that use multiple P6 family processors. This process uses the MP initialization protocol that was introduced with the Pentium Pro processor (see Section 9.4, "Multiple-Processor (MP) Initialization"). For P6 family processors, this protocol is typically used to boot 2 or 4 processors that reside on single system bus; however, it can support from 2 to 15 processors in a multi-clustered system when the APIC busses are tied together. Larger systems are not supported.

9.11.1 Overview of the MP Initialization Process For P6 Family Processors

During the execution of the MP initialization protocol, one processor is selected as the bootstrap processor (BSP) and the remaining processors are designated as application processors (APs), see Section 9.4.1, "BSP and AP Processors." Thereafter, the BSP manages the initialization of itself and the APs. This initialization includes executing BIOS initialization code and operating-system initialization code.

The MP protocol imposes the following requirements and restrictions on the system:

- An APIC clock (APICLK) must be provided.
- The MP protocol will be executed only after a power-up or RESET. If the MP protocol has been completed and a BSP has been chosen, subsequent INITs (either to a specific processor or system wide) do not cause the MP protocol to be repeated. Instead, each processor examines its BSP flag (in the APIC_BASE MSR) to determine whether it should execute the BIOS boot-strap code (if it is the BSP) or enter a wait-for-SIPI state (if it is an AP).
- All devices in the system that are capable of delivering interrupts to the processors must be inhibited from doing so for the duration of the MP initialization protocol. The time during which interrupts must be inhibited includes the window between when the BSP issues an INIT-SIPI-SIPI sequence to an AP and when the AP responds to the last SIPI in the sequence.

The following special-purpose interprocessor interrupts (IPIs) are used during the boot phase of the MP initialization protocol. These IPIs are broadcast on the APIC bus.

- Boot IPI (BIPI)—Initiates the arbitration mechanism that selects a BSP from the group of processors on the system bus and designates the remainder of the processors as APs. Each processor on the system bus broadcasts a BIPI to all the processors following a power-up or RESET.
- Final Boot IPI (FIPI)—Initiates the BIOS initialization procedure for the BSP. This IPI is broadcast to all the processors on the system bus, but only the BSP responds to it. The BSP responds by beginning execution of the BIOS initialization code at the reset vector.
- Startup IPI (SIPI)—Initiates the initialization procedure for an AP. The SIPI message contains a vector to the AP initialization code in the BIOS.

Table 9-5 describes the various fields of the boot phase IPIs.

Table 9-5. Boot Phase IPI Message Format

Type	Destination Field	Destination Shorthand	Trigger Mode	Level	Destination Mode	Delivery Mode	Vector (Hex)
BIPI	Not used	All including self	Edge	Deassert	Don't Care	Fixed (000)	40 to 4E*
FIPI	Not used	All including self	Edge	Deassert	Don't Care	Fixed (000)	10
SIPI	Used	All excluding self	Edge	Assert	Physical	StartUp (110)	00 to FF

NOTE:

* For all P6 family processors.

For BIPI messages, the lower 4 bits of the vector field contain the APIC ID of the processor issuing the message and the upper 4 bits contain the "generation ID" of the message. All P6 family processor will have a generation ID of 4H. BIPIs will therefore use vector values ranging from 40H to 4EH (4FH can not be used because FH is not a valid APIC ID).

9.11.2 MP Initialization Protocol Algorithm

Following a power-up or RESET of a system, the P6 family processors in the system execute the MP initialization protocol algorithm to initialize each of the processors on the system bus. In the course of executing this algorithm, the following boot-up and initialization operations are carried out:

1. Each processor on the system bus is assigned a unique APIC ID, based on system topology (see Section 9.4.5, "Identifying Logical Processors in an MP System"). This ID is written into the local APIC ID register for each processor.
2. Each processor executes its internal BIST simultaneously with the other processors on the system bus. Upon completion of the BIST (at T0), each processor broadcasts a BIPI to "all including self" (see Figure 9-1).
3. APIC arbitration hardware causes all the APICs to respond to the BIPIs one at a time (at T1, T2, T3, and T4).
4. When the first BIPI is received (at time T1), each APIC compares the four least significant bits of the BIPI's vector field with its APIC ID. If the vector and APIC ID match, the processor selects itself as the BSP by setting the BSP flag in its IA32_APIC_BASE MSR. If the vector and APIC ID do not match, the processor selects itself as an AP by entering the "wait for SIPI" state. (Note that in Figure 9-1, the BIPI from processor 1 is the first BIPI to be handled, so processor 1 becomes the BSP.)
5. The newly established BSP broadcasts an FIPI message to "all including self." The FIPI is guaranteed to be handled only after the completion of the BIPIs that were issued by the non-BSP processors.

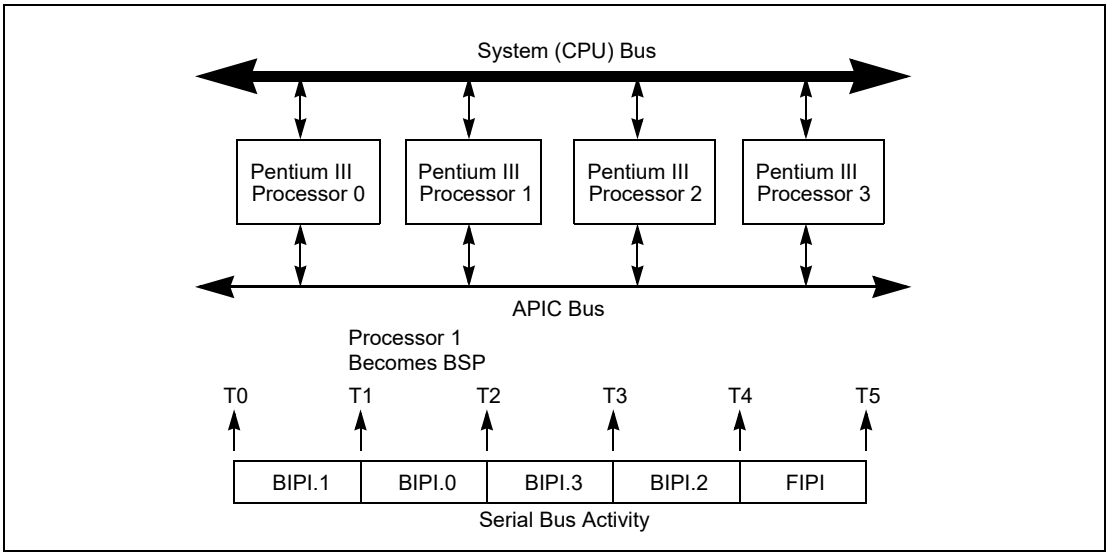

Figure 9-1. MP System With Multiple Pentium III Processors

6. After the BSP has been established, the outstanding BIPIs are received one at a time (at T2, T3, and T4) and ignored by all processors.
7. When the FIPI is finally received (at T5), only the BSP responds to it. It responds by fetching and executing BIOS boot-strap code, beginning at the reset vector (physical address FFFF FFF0H).
8. As part of the boot-strap code, the BSP creates an ACPI table and an MP table and adds its initial APIC ID to these tables as appropriate.
9. At the end of the boot-strap procedure, the BSP broadcasts a SIPI message to all the APs in the system. Here, the SIPI message contains a vector to the BIOS AP initialization code (at 000V V000H, where VV is the vector contained in the SIPI message).
10. All APs respond to the SIPI message by racing to a BIOS initialization semaphore. The first one to the semaphore begins executing the initialization code. (See MP init code for semaphore implementation details.) As part of the AP initialization procedure, the AP adds its APIC ID number to the ACPI and MP tables as appropriate. At the completion of the initialization procedure, the AP executes a CLI instruction (to clear the IF flag in the EFLAGS register) and halts itself.
11. When each of the APs has gained access to the semaphore and executed the AP initialization code and all written their APIC IDs into the appropriate places in the ACPI and MP tables, the BSP establishes a count for the number of processors connected to the system bus, completes executing the BIOS boot-strap code, and then begins executing operating-system boot-strap and start-up code.
12. While the BSP is executing operating-system boot-strap and start-up code, the APs remain in the halted state. In this state they will respond only to INITs, NMIs, and SMIs. They will also respond to snoops and to assertions of the STPCLK# pin.

See Section 9.4.4, "MP Initialization Example," for an annotated example the use of the MP protocol to boot IA-32 processors in an MP. This code should run on any IA-32 processor that used the MP protocol.

9.11.2.1 Error Detection and Handling During the MP Initialization Protocol

Errors may occur on the APIC bus during the MP initialization phase. These errors may be transient or permanent and can be caused by a variety of failure mechanisms (for example, broken traces, soft errors during bus usage, etc.). All serial bus related errors will result in an APIC checksum or acceptance error.

The MP initialization protocol makes the following assumptions regarding errors that occur during initialization:

- If errors are detected on the APIC bus during execution of the MP initialization protocol, the processors that detect the errors are shut down.
- The MP initialization protocol will be executed by processors even if they fail their BIST sequences.

CHAPTER 10
PROCESSOR MANAGEMENT AND INITIALIZATION

This chapter describes the facilities provided for managing processor wide functions and for initializing the processor. The subjects covered include: processor initialization, x87 FPU initialization, processor configuration, feature determination, mode switching, the MSRs (in the Pentium, P6 family, Pentium 4, and Intel Xeon processors), and the MTRRs (in the P6 family, Pentium 4, and Intel Xeon processors).

10.1 INITIALIZATION OVERVIEW

Following power-up or an assertion of the RESET# pin, each processor on the system bus performs a hardware initialization of the processor (known as a hardware reset) and an optional built-in self-test (BIST). A hardware reset sets each processor's registers to a known state and places the processor in real-address mode. It also invalidates the internal caches, translation lookaside buffers (TLBs) and the branch target buffer (BTB). At this point, the action taken depends on the processor family:

- **Pentium 4 processors (CPUID DisplayFamily 0FH)** — All the processors on the system bus (including a single processor in a uniprocessor system) execute the multiple processor (MP) initialization protocol. The processor that is selected through this protocol as the bootstrap processor (BSP) then immediately starts executing software-initialization code in the current code segment beginning at the offset in the EIP register. The application (non-BSP) processors (APs) go into a Wait For Startup IPI (SIPI) state while the BSP is executing initialization code. See Section 9.4, "Multiple-Processor (MP) Initialization," for more details. Note that in a uniprocessor system, the single Pentium 4 or Intel Xeon processor automatically becomes the BSP.
- **IA-32 and Intel 64 processors (CPUID DisplayFamily 06H)** — The action taken is the same as for the Pentium 4 processors (as described in the previous paragraph).
- **Pentium processors** — In either a single- or dual- processor system, a single Pentium processor is always pre-designated as the primary processor. Following a reset, the primary processor behaves as follows in both single- and dual-processor systems. Using the dual-processor (DP) ready initialization protocol, the primary processor immediately starts executing software-initialization code in the current code segment beginning at the offset in the EIP register. The secondary processor (if there is one) goes into a halt state.
- **Intel486 processor** — The primary processor (or single processor in a uniprocessor system) immediately starts executing software-initialization code in the current code segment beginning at the offset in the EIP register. (The Intel486 does not automatically execute a DP or MP initialization protocol to determine which processor is the primary processor.)

The software-initialization code performs all system-specific initialization of the BSP or primary processor and the system logic.

At this point, for MP (or DP) systems, the BSP (or primary) processor wakes up each AP (or secondary) processor to enable those processors to execute self-configuration code.

When all processors are initialized, configured, and synchronized, the BSP or primary processor begins executing an initial operating-system or executive task.

The x87 FPU is also initialized to a known state during hardware reset. x87 FPU software initialization code can then be executed to perform operations such as setting the precision of the x87 FPU and the exception masks. No special initialization of the x87 FPU is required to switch operating modes.

Asserting the INIT# pin on the processor invokes a similar response to a hardware reset. The major difference is that during an INIT, the internal caches, MSRs, MTRRs, and x87 FPU state are left unchanged (although, the TLBs and BTB are invalidated as with a hardware reset). An INIT provides a method for switching from protected to real-address mode while maintaining the contents of the internal caches.

10.1.1 Processor State After Reset

Following power-up, The state of control register CR0 is 60000010H (see Figure 10-1). This places the processor is in real-address mode with paging disabled.

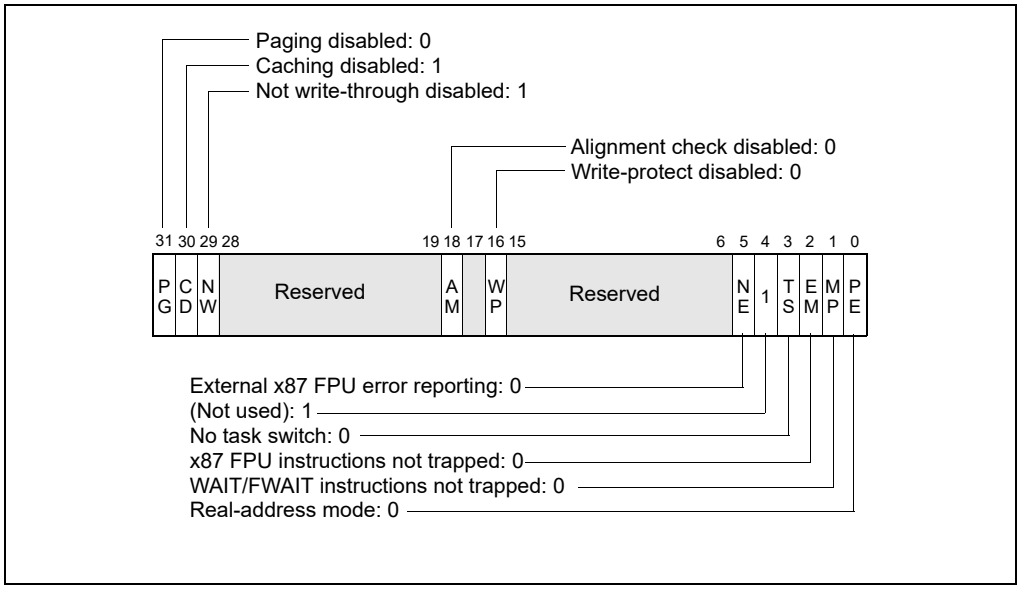

Figure 10-1. Contents of CR0 Register after Reset

The state of the flags and other registers following power-up for the Pentium 4, Pentium Pro, and Pentium processors are shown in Section 23.39, "Initial State of Pentium, Pentium Pro and Pentium 4 Processors" of the *Intel® 64 and IA-32 Architectures Software Developer's Manual, Volume 3B*.

Table 10-1 shows processor states of IA-32 and Intel 64 processors with CPUID DisplayFamily signature of 06H at the following events: power-up, RESET, and INIT. In a few cases, the behavior of some registers behave slightly different across warm RESET, the variant cases are marked in Table 10-1 and described in more detail in Table 10-2.

Table 10-1. IA-32 and Intel 64 Processor States Following Power-up, Reset, or INIT

Register	Power up	Reset	INIT
EFLAGS[1]	00000002H	00000002H	00000002H
EIP	0000FFF0H	0000FFF0H	0000FFF0H
CR0	60000010H[2]	60000010H[2]	60000010H[2]
CR2, CR3, CR4	00000000H	00000000H	00000000H
CS	Selector = F000H Base = FFFF0000H Limit = FFFFH AR = Present, R/W, Accessed	Selector = F000H Base = FFFF0000H Limit = FFFFH AR = Present, R/W, Accessed	Selector = F000H Base = FFFF0000H Limit = FFFFH AR = Present, R/W, Accessed
SS, DS, ES, FS, GS	Selector = 0000H Base = 00000000H Limit = FFFFH AR = Present, R/W, Accessed	Selector = 0000H Base = 00000000H Limit = FFFFH AR = Present, R/W, Accessed	Selector = 0000H Base = 00000000H Limit = FFFFH AR = Present, R/W, Accessed
EDX	000n06xxH[3]	000n06xxH[3]	000n06xxH[3]
EAX	0[4]	0[4]	0[4]
EBX, ECX, ESI, EDI, EBP, ESP	00000000H	00000000H	00000000H

Table 10-1. IA-32 and Intel 64 Processor States Following Power-up, Reset, or INIT (Contd.)

Register	Power up	Reset	INIT
ST0 through ST7[5]	+0.0	+0.0	FINIT/FNINIT: Unchanged
x87 FPU Control Word[5]	0040H	0040H	FINIT/FNINIT: 037FH
x87 FPU Status Word[5]	0000H	0000H	FINIT/FNINIT: 0000H
x87 FPU Tag Word[5]	5555H	5555H	FINIT/FNINIT: FFFFH
x87 FPU Data Operand and CS Seg. Selectors[5]	0000H	0000H	FINIT/FNINIT: 0000H
x87 FPU Data Operand and Inst. Pointers[5]	00000000H	00000000H	FINIT/FNINIT: 00000000H
MM0 through MM7[5]	0000000000000000H	0000000000000000H	INIT or FINIT/FNINIT: Unchanged
XMM0 through XMM7	0H	0H	Unchanged
MXCSR	1F80H	1F80H	Unchanged
GDTR, IDTR	Base = 00000000H Limit = FFFFH AR = Present, R/W	Base = 00000000H Limit = FFFFH AR = Present, R/W	Base = 00000000H Limit = FFFFH AR = Present, R/W
LDTR, Task Register	Selector = 0000H Base = 00000000H Limit = FFFFH AR = Present, R/W	Selector = 0000H Base = 00000000H Limit = FFFFH AR = Present, R/W	Selector = 0000H Base = 00000000H Limit = FFFFH AR = Present, R/W
DR0, DR1, DR2, DR3	00000000H	00000000H	00000000H
DR6	FFFF0FF0H	FFFF0FF0H	FFFF0FF0H
DR7	00000400H	00000400H	00000400H
R8-R15	0000000000000000H	0000000000000000H	0000000000000000H
XMM8-XMM15	0H	0H	Unchanged
XCR0	1H	1H	Unchanged
IA32_XSS	0H	0H	Unchanged
YMM_H[255:128]	0H	0H	Unchanged
BNDCFGU	0H	0H	0H
BND0-BND3	0H	0H	0H
IA32_BNDCFGS	0H	0H	0H
OPMASK	0H	0H	Unchanged
ZMM_H[511:256]	0H	0H	Unchanged
ZMMHi16[511:0]	0H	0H	Unchanged
PKRU	0H	0H	Unchanged
Intel Processor Trace MSRs	0H	0H[W]	Unchanged
Time-Stamp Counter	0H	0H[W]	Unchanged
IA32_TSC_AUX	0H	0H	Unchanged
IA32_TSC_ADJUST	0H	0H	Unchanged
IA32_TSC_DEADLINE	0H	0H	Unchanged
IA32_SYSENTER_CS/ESP/EIP	0H	0H	Unchanged
IA32_EFER	0000000000000000H	0000000000000000H	0000000000000000H
IA32_STAR/LSTAR	0H	0H	Unchanged

Table 10-1. IA-32 and Intel 64 Processor States Following Power-up, Reset, or INIT (Contd.)

Register	Power up	Reset	INIT
IA32_FS_BASE/GS_BASE	0H	0H	0H
IA32_PMCx, IA32_PERFEVTSELx	0H	0H	Unchanged
IA32_FIXED_CTRx, IA32_FIXED_CTR_CTRL, Global Perf Counter Controls	0H	0H	Unchanged
Data and Code Cache, TLBs	Invalid[6]	Invalid[6]	Unchanged
Fixed MTRRs	Disabled	Disabled	Unchanged
Variable MTRRs	Disabled	Disabled	Unchanged
Machine-Check Banks	Undefined	Undefined[W]	Unchanged
Last Branch Record Stack	0	0[W]	Unchanged
APIC	Enabled	Enabled	Unchanged
X2APIC	Disabled	Disabled	Unchanged
IA32_DEBUG_INTERFACE	0	0[W]	Unchanged

NOTES:

1. The 10 most-significant bits of the EFLAGS register are undefined following a reset. Software should not depend on the states of any of these bits.
2. The CD and NW flags are unchanged, bit 4 is set to 1, all other bits are cleared.
3. Where "n" is the Extended Model Value for the respective processor, and "xx" = don't care.
4. If Built-In Self-Test (BIST) is invoked on power up or reset, EAX is 0 only if all tests passed. (BIST cannot be invoked during an INIT.)
5. The state of the x87 FPU and MMX registers is not changed by the execution of an INIT.
6. Internal caches are invalid after power-up and RESET, but left unchanged with an INIT.

W: Warm RESET behavior differs from power-on RESET with details listed in Table 10-2.

Table 10-2. Variance of RESET Values in Selected Intel Architecture Processors

State	XREF	Value	Feature Flag or DisplayFamily_DisplayModel Signatures
Time-Stamp Counter	Warm RESET	Unmodified across warm Reset	06_2DH, 06_3EH
Machine-Check Banks	Warm RESET	IA32_MCi_Status banks are unmodified across warm Reset	06_2DH, 06_3EH, 06_3FH, 06_4FH, 06_56H
Last Branch Record Stack	Warm RESET	LBR stack MSRs are unmodified across warm Reset	06_1AH, 06_1CH, DisplayFamiy= 06 and DisplayModel >1DH
Intel Processor Trace MSRs	Warm RESET	Clears IA32_RTIT_CTL.TraceEn, the rest of MSRs are unmodified	If CPUID.(EAX=14H, ECX=0H):EBX[bit 2] = 1
IA32_DEBUG_INTERFACE	Warm RESET	Unmodified across warm Reset	If CPUID.01H:ECX.[11] = 1

10.1.2 Processor Built-In Self-Test (BIST)

Hardware may request that the BIST be performed at power-up. The EAX register is cleared (0H) if the processor passes the BIST. A nonzero value in the EAX register after the BIST indicates that a processor fault was detected. If the BIST is not requested, the contents of the EAX register after a hardware reset is 0H.

The overhead for performing a BIST varies between processor families. For example, the BIST takes approximately 30 million processor clock periods to execute on the Pentium 4 processor. This clock count is model-specific; Intel reserves the right to change the number of periods for any Intel 64 or IA-32 processor, without notification.

10.1.3 Model and Stepping Information

Following a hardware reset, the EDX register contains component identification and revision information (see Figure 10-2). For example, the model, family, and processor type returned for the first processor in the Intel Pentium 4 family is as follows: model (0000B), family (1111B), and processor type (00B).

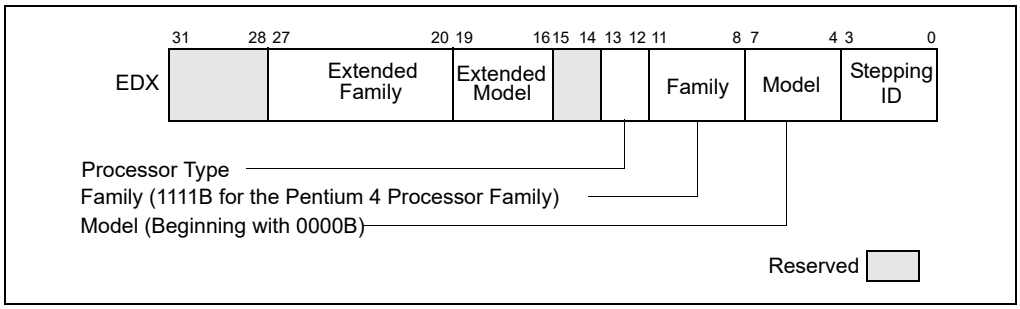

Figure 10-2. Version Information in the EDX Register after Reset

The stepping ID field contains a unique identifier for the processor's stepping ID or revision level. The extended family and extended model fields were added to the IA-32 architecture in the Pentium 4 processors.

10.1.4 First Instruction Executed

The first instruction that is fetched and executed following a hardware reset is located at physical address FFFFFFF0H. This address is 16 bytes below the processor's uppermost physical address. The EPROM containing the software-initialization code must be located at this address.

The address FFFFFFF0H is beyond the 1-MByte addressable range of the processor while in real-address mode. The processor is initialized to this starting address as follows. The CS register has two parts: the visible segment selector part and the hidden base address part. In real-address mode, the base address is normally formed by shifting the 16-bit segment selector value 4 bits to the left to produce a 20-bit base address. However, during a hardware reset, the segment selector in the CS register is loaded with F000H and the base address is loaded with FFFF0000H. The starting address is thus formed by adding the base address to the value in the EIP register (that is, FFFF0000 + FFF0H = FFFFFFF0H).

The first time the CS register is loaded with a new value after a hardware reset, the processor will follow the normal rule for address translation in real-address mode (that is, [CS base address = CS segment selector * 16]). To ensure that the base address in the CS register remains unchanged until the EPROM based software-initialization code is completed, the code must not contain a far jump or far call or allow an interrupt to occur (which would cause the CS selector value to be changed).

10.2 X87 FPU INITIALIZATION

Software-initialization code can determine the whether the processor contains an x87 FPU by using the CPUID instruction. The code must then initialize the x87 FPU and set flags in control register CR0 to reflect the state of the x87 FPU environment.

A hardware reset places the x87 FPU in the state shown in Table 10-1. This state is different from the state the x87 FPU is placed in following the execution of an FINIT or FNINIT instruction (also shown in Table 10-1). If the x87 FPU is to be used, the software-initialization code should execute an FINIT/FNINIT instruction following a hardware reset. These instructions, tag all data registers as empty, clear all the exception masks, set the TOP-of-stack value to 0, and select the default rounding and precision controls setting (round to nearest and 64-bit precision).

If the processor is reset by asserting the INIT# pin, the x87 FPU state is not changed.

10.2.1 Configuring the x87 FPU Environment

Initialization code must load the appropriate values into the MP, EM, and NE flags of control register CR0. These bits are cleared on hardware reset of the processor. Figure 10-3 shows the suggested settings for these flags, depending on the IA-32 processor being initialized. Initialization code can test for the type of processor present before setting or clearing these flags.

Table 10-3. Recommended Settings of EM and MP Flags on IA-32 Processors

EM	MP	NE	IA-32 processor
1	0	1	Intel486™ SX, Intel386™ DX, and Intel386™ SX processors only, without the presence of a math coprocessor.
0	1	1 or 0*	Pentium 4, Intel Xeon, P6 family, Pentium, Intel486™ DX, and Intel 487 SX processors, and Intel386 DX and Intel386 SX processors when a companion math coprocessor is present.
0	1	1 or 0*	More recent Intel 64 or IA-32 processors

NOTE:

* The setting of the NE flag depends on the operating system being used.

The EM flag determines whether floating-point instructions are executed by the x87 FPU (EM is cleared) or a device-not-available exception (#NM) is generated for all floating-point instructions so that an exception handler can emulate the floating-point operation (EM = 1). Ordinarily, the EM flag is cleared when an x87 FPU or math coprocessor is present and set if they are not present. If the EM flag is set and no x87 FPU, math coprocessor, or floating-point emulator is present, the processor will hang when a floating-point instruction is executed.

The MP flag determines whether WAIT/FWAIT instructions react to the setting of the TS flag. If the MP flag is clear, WAIT/FWAIT instructions ignore the setting of the TS flag; if the MP flag is set, they will generate a device-not-available exception (#NM) if the TS flag is set. Generally, the MP flag should be set for processors with an integrated x87 FPU and clear for processors without an integrated x87 FPU and without a math coprocessor present. However, an operating system can choose to save the floating-point context at every context switch, in which case there would be no need to set the MP bit.

Table 2-2 shows the actions taken for floating-point and WAIT/FWAIT instructions based on the settings of the EM, MP, and TS flags.

The NE flag determines whether unmasked floating-point exceptions are handled by generating a floating-point error exception internally (NE is set, native mode) or through an external interrupt (NE is cleared). In systems where an external interrupt controller is used to invoke numeric exception handlers (such as MS-DOS-based systems), the NE bit should be cleared.

10.2.2 Setting the Processor for x87 FPU Software Emulation

Setting the EM flag causes the processor to generate a device-not-available exception (#NM) and trap to a software exception handler whenever it encounters a floating-point instruction. (Table 10-3 shows when it is appropriate to use this flag.) Setting this flag has two functions:

- It allows x87 FPU code to run on an IA-32 processor that has neither an integrated x87 FPU nor is connected to an external math coprocessor, by using a floating-point emulator.
- It allows floating-point code to be executed using a special or nonstandard floating-point emulator, selected for a particular application, regardless of whether an x87 FPU or math coprocessor is present.

To emulate floating-point instructions, the EM, MP, and NE flag in control register CR0 should be set as shown in Table 10-4.

Table 10-4. Software Emulation Settings of EM, MP, and NE Flags

CR0 Bit	Value
EM	1
MP	0
NE	1

Regardless of the value of the EM bit, the Intel486 SX processor generates a device-not-available exception (#NM) upon encountering any floating-point instruction.

10.3 CACHE ENABLING

IA-32 processors (beginning with the Intel486 processor) and Intel 64 processors contain internal instruction and data caches. These caches are enabled by clearing the CD and NW flags in control register CR0. (They are set during a hardware reset.) Because all internal cache lines are invalid following reset initialization, it is not necessary to invalidate the cache before enabling caching. Any external caches may require initialization and invalidation using a system-specific initialization and invalidation code sequence.

Depending on the hardware and operating system or executive requirements, additional configuration of the processor's caching facilities will probably be required. Beginning with the Intel486 processor, page-level caching can be controlled with the PCD and PWT flags in page-directory and page-table entries. Beginning with the P6 family processors, the memory type range registers (MTRRs) control the caching characteristics of the regions of physical memory. (For the Intel486 and Pentium processors, external hardware can be used to control the caching characteristics of regions of physical memory.) See Chapter 12, "Memory Cache Control," for detailed information on configuration of the caching facilities in the Pentium 4, Intel Xeon, and P6 family processors and system memory.

10.4 MODEL-SPECIFIC REGISTERS (MSRS)

Most IA-32 processors (starting from Pentium processors) and Intel 64 processors contain a model-specific registers (MSRs). A given MSR may not be supported across all families and models for Intel 64 and IA-32 processors. Some MSRs are designated as architectural to simplify software programming; a feature introduced by an architectural MSR is expected to be supported in future processors. Non-architectural MSRs are not guaranteed to be supported or to have the same functions on future processors.

MSRs that provide control for a number of hardware and software-related features, include:

- Performance-monitoring counters (see Chapter 20, "Performance Monitoring").
- Debug extensions (see Chapter 18, "Debug, Branch Profile, TSC, and Intel® Resource Director Technology (Intel® RDT) Features").
- Machine-check exception capability and its accompanying machine-check architecture (see Chapter 16, "Machine-Check Architecture").
- MTRRs (see Section 12.11, "Memory Type Range Registers (MTRRs)").
- Thermal and power management.
- Instruction-specific support (for example: SYSENTER, SYSEXIT, SWAPGS, etc.).
- Processor feature/mode support (for example: IA32_EFER, IA32_FEATURE_CONTROL).

The MSRs can be read and written to using the RDMSR and WRMSR instructions, respectively.

When performing software initialization of an IA-32 or Intel 64 processor, many of the MSRs will need to be initialized to set up things like performance-monitoring events, run-time machine checks, and memory types for physical memory.

Lists of available performance-monitoring events can be found at: https://perfmon-events.intel.com/, and lists of available MSRs are given in Chapter 2, "Model-Specific Registers (MSRs)" in the *Intel® 64 and IA-32 Architectures Software Developer's Manual, Volume 4*. The references earlier in this section show where the functions of the various groups of MSRs are described in this manual.

10.5 MEMORY TYPE RANGE REGISTERS (MTRRS)

Memory type range registers (MTRRs) were introduced into the IA-32 architecture with the Pentium Pro processor. They allow the type of caching (or no caching) to be specified in system memory for selected physical address ranges. They allow memory accesses to be optimized for various types of memory such as RAM, ROM, frame buffer memory, and memory-mapped I/O devices.

In general, initializing the MTRRs is normally handled by the software initialization code or BIOS and is not an operating system or executive function. At the very least, all the MTRRs must be cleared to 0, which selects the uncached (UC) memory type. See Section 12.11, "Memory Type Range Registers (MTRRs)," for detailed information on the MTRRs.

10.6 INITIALIZING SSE/SSE2/SSE3/SSSE3 EXTENSIONS

For processors that contain SSE/SSE2/SSE3/SSSE3 extensions, steps must be taken when initializing the processor to allow execution of these instructions.

1. Check the CPUID feature flags for the presence of the SSE/SSE2/SSE3/SSSE3 extensions (respectively: EDX bits 25 and 26, ECX bit 0 and 9) and support for the FXSAVE and FXRSTOR instructions (EDX bit 24). Also check for support for the CLFLUSH instruction (EDX bit 19). The CPUID feature flags are loaded in the EDX and ECX registers when the CPUID instruction is executed with a 1 in the EAX register.
2. Set the OSFXSR flag (bit 9 in control register CR4) to indicate that the operating system supports saving and restoring the SSE/SSE2/SSE3/SSSE3 execution environment (XMM and MXCSR registers) with the FXSAVE and FXRSTOR instructions, respectively. See Section 2.5, "Control Registers," for a description of the OSFXSR flag.
3. Set the OSXMMEXCPT flag (bit 10 in control register CR4) to indicate that the operating system supports the handling of SSE/SSE2/SSE3 SIMD floating-point exceptions (#XM). See Section 2.5, "Control Registers," for a description of the OSXMMEXCPT flag.
4. Set the mask bits and flags in the MXCSR register according to the mode of operation desired for SSE/SSE2/SSE3 SIMD floating-point instructions. See "MXCSR Control and Status Register" in Chapter 10, "Programming with Streaming SIMD Extensions (SSE)," of the *Intel® 64 and IA-32 Architectures Software Developer's Manual, Volume 1*, for a detailed description of the bits and flags in the MXCSR register.

10.7 SOFTWARE INITIALIZATION FOR REAL-ADDRESS MODE OPERATION

Following a hardware reset (either through a power-up or the assertion of the RESET# pin) the processor is placed in real-address mode and begins executing software initialization code from physical address FFFFFFF0H. Software initialization code must first set up the necessary data structures for handling basic system functions, such as a real-mode IDT for handling interrupts and exceptions. If the processor is to remain in real-address mode, software must then load additional operating-system or executive code modules and data structures to allow reliable execution of application programs in real-address mode.

If the processor is going to operate in protected mode, software must load the necessary data structures to operate in protected mode and then switch to protected mode. The protected-mode data structures that must be loaded are described in Section 10.8, "Software Initialization for Protected-Mode Operation."

10.7.1 Real-Address Mode IDT

In real-address mode, the only system data structure that must be loaded into memory is the IDT (also called the "interrupt vector table"). By default, the address of the base of the IDT is physical address 0H. This address can be

changed by using the LIDT instruction to change the base address value in the IDTR. Software initialization code needs to load interrupt- and exception-handler pointers into the IDT before interrupts can be enabled.

The actual interrupt- and exception-handler code can be contained either in EPROM or RAM; however, the code must be located within the 1-MByte addressable range of the processor in real-address mode. If the handler code is to be stored in RAM, it must be loaded along with the IDT.

10.7.2 NMI Interrupt Handling

The NMI interrupt is always enabled (except when multiple NMIs are nested). If the IDT and the NMI interrupt handler need to be loaded into RAM, there will be a period of time following hardware reset when an NMI interrupt cannot be handled. During this time, hardware must provide a mechanism to prevent an NMI interrupt from halting code execution until the IDT and the necessary NMI handler software is loaded. Here are two examples of how NMIs can be handled during the initial states of processor initialization:

- A simple IDT and NMI interrupt handler can be provided in EPROM. This allows an NMI interrupt to be handled immediately after reset initialization.
- The system hardware can provide a mechanism to enable and disable NMIs by passing the NMI# signal through an AND gate controlled by a flag in an I/O port. Hardware can clear the flag when the processor is reset, and software can set the flag when it is ready to handle NMI interrupts.

10.8 SOFTWARE INITIALIZATION FOR PROTECTED-MODE OPERATION

The processor is placed in real-address mode following a hardware reset. At this point in the initialization process, some basic data structures and code modules must be loaded into physical memory to support further initialization of the processor, as described in Section 10.7, “Software Initialization for Real-Address Mode Operation.” Before the processor can be switched to protected mode, the software initialization code must load a minimum number of protected mode data structures and code modules into memory to support reliable operation of the processor in protected mode. These data structures include the following:

- A IDT.
- A GDT.
- A TSS.
- (Optional) An LDT.
- If paging is to be used, at least one page directory and one page table.
- A code segment that contains the code to be executed when the processor switches to protected mode.
- One or more code modules that contain the necessary interrupt and exception handlers.

Software initialization code must also initialize the following system registers before the processor can be switched to protected mode:

- The GDTR.
- (Optional.) The IDTR. This register can also be initialized immediately after switching to protected mode, prior to enabling interrupts.
- Control registers CR1 through CR4.
- (Pentium 4, Intel Xeon, and P6 family processors only.) The memory type range registers (MTRRs).

With these data structures, code modules, and system registers initialized, the processor can be switched to protected mode by loading control register CR0 with a value that sets the PE flag (bit 0).

10.8.1 Protected-Mode System Data Structures

The contents of the protected-mode system data structures loaded into memory during software initialization, depend largely on the type of memory management the protected-mode operating-system or executive is going to support: flat, flat with paging, segmented, or segmented with paging.

To implement a flat memory model without paging, software initialization code must at a minimum load a GDT with one code and one data-segment descriptor. A null descriptor in the first GDT entry is also required. The stack can be placed in a normal read/write data segment, so no dedicated descriptor for the stack is required. A flat memory model with paging also requires a page directory and at least one page table (unless all pages are 4 MBytes in which case only a page directory is required). See Section 10.8.3, "Initializing Paging."

Before the GDT can be used, the base address and limit for the GDT must be loaded into the GDTR register using an LGDT instruction.

A multi-segmented model may require additional segments for the operating system, as well as segments and LDTs for each application program. LDTs require segment descriptors in the GDT. Some operating systems allocate new segments and LDTs as they are needed. This provides maximum flexibility for handling a dynamic programming environment. However, many operating systems use a single LDT for all tasks, allocating GDT entries in advance. An embedded system, such as a process controller, might pre-allocate a fixed number of segments and LDTs for a fixed number of application programs. This would be a simple and efficient way to structure the software environment of a real-time system.

10.8.2 Initializing Protected-Mode Exceptions and Interrupts

Software initialization code must at a minimum load a protected-mode IDT with gate descriptor for each exception vector that the processor can generate. If interrupt or trap gates are used, the gate descriptors can all point to the same code segment, which contains the necessary exception handlers. If task gates are used, one TSS and accompanying code, data, and task segments are required for each exception handler called with a task gate.

If hardware allows interrupts to be generated, gate descriptors must be provided in the IDT for one or more interrupt handlers.

Before the IDT can be used, the base address and limit for the IDT must be loaded into the IDTR register using an LIDT instruction. This operation is typically carried out immediately after switching to protected mode.

10.8.3 Initializing Paging

Paging is controlled by the PG flag in control register CR0. When this flag is clear (its state following a hardware reset), the paging mechanism is turned off; when it is set, paging is enabled. Before setting the PG flag, the following data structures and registers must be initialized:

- Software must load at least one page directory and one page table into physical memory. The page table can be eliminated if the page directory contains a directory entry pointing to itself (here, the page directory and page table reside in the same page), or if only 4-MByte pages are used.
- Control register CR3 (also called the PDBR register) is loaded with the physical base address of the page directory.
- (Optional) Software may provide one set of code and data descriptors in the GDT or in an LDT for supervisor mode and another set for user mode.

With this paging initialization complete, paging is enabled and the processor is switched to protected mode at the same time by loading control register CR0 with an image in which the PG and PE flags are set. (Paging cannot be enabled before the processor is switched to protected mode.)

10.8.4 Initializing Multitasking

If the multitasking mechanism is not going to be used and changes between privilege levels are not allowed, it is not necessary load a TSS into memory or to initialize the task register.

If the multitasking mechanism is going to be used and/or changes between privilege levels are allowed, software initialization code must load at least one TSS and an accompanying TSS descriptor. (A TSS is required to change privilege levels because pointers to the privileged-level 0, 1, and 2 stack segments and the stack pointers for these stacks are obtained from the TSS.) TSS descriptors must not be marked as busy when they are created; they should be marked busy by the processor only as a side-effect of performing a task switch. As with descriptors for LDTs, TSS descriptors reside in the GDT.

After the processor has switched to protected mode, the LTR instruction can be used to load a segment selector for a TSS descriptor into the task register. This instruction marks the TSS descriptor as busy, but does not perform a task switch. The processor can, however, use the TSS to locate pointers to privilege-level 0, 1, and 2 stacks. The segment selector for the TSS must be loaded before software performs its first task switch in protected mode, because a task switch copies the current task state into the TSS.

After the LTR instruction has been executed, further operations on the task register are performed by task switching. As with other segments and LDTs, TSSs and TSS descriptors can be either pre-allocated or allocated as needed.

10.8.5 Initializing IA-32e Mode

On Intel 64 processors, the IA32_EFER MSR is cleared on system reset. The operating system must be in protected mode with paging enabled before attempting to initialize IA-32e mode. IA-32e mode operation also requires physical-address extensions with four or five levels of enhanced paging structures (see Section 4.5, "4-Level Paging and 5-Level Paging").

Operating systems should follow this sequence to initialize IA-32e mode:

1. Starting from protected mode, disable paging by setting CR0.PG = 0. Use the MOV CR0 instruction to disable paging (the instruction must be located in an identity-mapped page).
2. Enable physical-address extensions (PAE) by setting CR4.PAE = 1. Failure to enable PAE will result in a #GP fault when an attempt is made to initialize IA-32e mode.
3. Load CR3 with the physical base address of the Level 4 page map table (PML4) or Level 5 page map table (PML5).
4. Enable IA-32e mode by setting IA32_EFER.LME = 1.
5. Enable paging by setting CR0.PG = 1. This causes the processor to set the IA32_EFER.LMA bit to 1. The MOV CR0 instruction that enables paging and the following instructions must be located in an identity-mapped page (until such time that a branch to non-identity mapped pages can be effected).

64-bit mode paging structures must be located in the first 4 GBytes of physical-address space prior to activating IA-32e mode. This is necessary because the MOV CR3 instruction used to initialize the page-directory base must be executed in legacy mode prior to activating IA-32e mode (setting CR0.PG = 1 to enable paging). Because MOV CR3 is executed in protected mode, only the lower 32 bits of the register are written, limiting the table location to the low 4 GBytes of memory. Software can relocate the page tables anywhere in physical memory after IA-32e mode is activated.

The processor performs 64-bit mode consistency checks whenever software attempts to modify any of the enable bits directly involved in activating IA-32e mode (IA32_EFER.LME, CR0.PG, and CR4.PAE). It will generate a general protection fault (#GP) if consistency checks fail. 64-bit mode consistency checks ensure that the processor does not enter an undefined mode or state with unpredictable behavior.

64-bit mode consistency checks fail in the following circumstances:

- An attempt is made to enable or disable IA-32e mode while paging is enabled.
- IA-32e mode is enabled and an attempt is made to enable paging prior to enabling physical-address extensions (PAE).
- IA-32e mode is active and an attempt is made to disable physical-address extensions (PAE).
- If the current CS has the L-bit set on an attempt to activate IA-32e mode.
- If the TR contains a 16-bit TSS on an attempt to activate IA-32e mode.

10.8.5.1 IA-32e Mode System Data Structures

After activating IA-32e mode, the system-descriptor-table registers (GDTR, LDTR, IDTR, TR) continue to reference legacy protected-mode descriptor tables. Tables referenced by the descriptors all reside in the lower 4 GBytes of linear-address space. After activating IA-32e mode, 64-bit operating-systems should use the LGDT, LLDT, LIDT, and LTR instructions to load the system-descriptor-table registers with references to 64-bit descriptor tables.

10.8.5.2 IA-32e Mode Interrupts and Exceptions

Software must not allow exceptions or interrupts to occur between the time IA-32e mode is activated and the update of the interrupt-descriptor-table register (IDTR) that establishes references to a 64-bit interrupt-descriptor table (IDT). This is because the IDT remains in legacy form immediately after IA-32e mode is activated.

If an interrupt or exception occurs prior to updating the IDTR, a legacy 32-bit interrupt gate will be referenced and interpreted as a 64-bit interrupt gate with unpredictable results. External interrupts can be disabled by using the CLI instruction.

Non-maskable interrupts (NMI) must be disabled using external hardware.

10.8.5.3 64-bit Mode and Compatibility Mode Operation

IA-32e mode uses two code segment-descriptor bits (CS.L and CS.D, see Figure 3-8) to control the operating modes after IA-32e mode is initialized. If CS.L = 1 and CS.D = 0, the processor is running in 64-bit mode. With this encoding, the default operand size is 32 bits and default address size is 64 bits. Using instruction prefixes, operand size can be changed to 64 bits or 16 bits; address size can be changed to 32 bits.

When IA-32e mode is active and CS.L = 0, the processor operates in compatibility mode. In this mode, CS.D controls default operand and address sizes exactly as it does in the IA-32 architecture. Setting CS.D = 1 specifies default operand and address size as 32 bits. Clearing CS.D to 0 specifies default operand and address size as 16 bits (the CS.L = 1, CS.D = 1 bit combination is reserved).

Compatibility mode execution is selected on a code-segment basis. This mode allows legacy applications to coexist with 64-bit applications running in 64-bit mode. An operating system running in IA-32e mode can execute existing 16-bit and 32-bit applications by clearing their code-segment descriptor's CS.L bit to 0.

In compatibility mode, the following system-level mechanisms continue to operate using the IA-32e-mode architectural semantics:

- Linear-to-physical address translation uses the 64-bit mode extended page-translation mechanism.
- Interrupts and exceptions are handled using the 64-bit mode mechanisms.
- System calls (calls through call gates and SYSENTER/SYSEXIT) are handled using the IA-32e mode mechanisms.

10.8.5.4 Switching Out of IA-32e Mode Operation

To return from IA-32e mode to paged-protected mode operation operating systems must use the following sequence:

1. Switch to compatibility mode.
2. Deactivate IA-32e mode by clearing CR0.PG = 0. This causes the processor to set IA32_EFER.LMA = 0. The MOV CR0 instruction used to disable paging and subsequent instructions must be located in an identity-mapped page.
3. Load CR3 with the physical base address of the legacy page-table-directory base address.
4. Disable IA-32e mode by setting IA32_EFER.LME = 0.
5. Enable legacy paged-protected mode by setting CR0.PG = 1
6. A branch instruction must follow the MOV CR0 that enables paging. Both the MOV CR0 and the branch instruction must be located in an identity-mapped page.

Registers only available in 64-bit mode (R8-R15 and XMM8-XMM15) are preserved across transitions from 64-bit mode into compatibility mode then back into 64-bit mode. However, values of R8-R15 and XMM8-XMM15 are undefined after transitions from 64-bit mode through compatibility mode to legacy or real mode and then back through compatibility mode to 64-bit mode.

10.9 MODE SWITCHING

To use the processor in protected mode after hardware or software reset, a mode switch must be performed from real-address mode. Once in protected mode, software generally does not need to return to real-address mode. To run software written to run in real-address mode (8086 mode), it is generally more convenient to run the software in virtual-8086 mode, than to switch back to real-address mode.

10.9.1 Switching to Protected Mode

Before switching to protected mode from real mode, a minimum set of system data structures and code modules must be loaded into memory, as described in Section 10.8, "Software Initialization for Protected-Mode Operation." Once these tables are created, software initialization code can switch into protected mode.

Protected mode is entered by executing a MOV CR0 instruction that sets the PE flag in the CR0 register. (In the same instruction, the PG flag in register CR0 can be set to enable paging.) Execution in protected mode begins with a CPL of 0.

Intel 64 and IA-32 processors have slightly different requirements for switching to protected mode. To ensure upwards and downwards code compatibility with Intel 64 and IA-32 processors, we recommend that you follow these steps:

1. Disable interrupts. A CLI instruction disables maskable hardware interrupts. NMI interrupts can be disabled with external circuitry. (Software must guarantee that no exceptions or interrupts are generated during the mode switching operation.)
2. Execute the LGDT instruction to load the GDTR register with the base address of the GDT.
3. Execute a MOV CR0 instruction that sets the PE flag (and optionally the PG flag) in control register CR0.
4. Immediately following the MOV CR0 instruction, execute a far JMP or far CALL instruction. (This operation is typically a far jump or call to the next instruction in the instruction stream.)
5. The JMP or CALL instruction immediately after the MOV CR0 instruction changes the flow of execution and serializes the processor.
6. If paging is enabled, the code for the MOV CR0 instruction and the JMP or CALL instruction must come from a page that is identity mapped (that is, the linear address before the jump is the same as the physical address after paging and protected mode is enabled). The target instruction for the JMP or CALL instruction does not need to be identity mapped.
7. If a local descriptor table is going to be used, execute the LLDT instruction to load the segment selector for the LDT in the LDTR register.
8. Execute the LTR instruction to load the task register with a segment selector to the initial protected-mode task or to a writable area of memory that can be used to store TSS information on a task switch.
9. After entering protected mode, the segment registers continue to hold the contents they had in real-address mode. The JMP or CALL instruction in step 4 resets the CS register. Perform one of the following operations to update the contents of the remaining segment registers.
   - Reload segment registers DS, SS, ES, FS, and GS. If the ES, FS, and/or GS registers are not going to be used, load them with a null selector.
   - Perform a JMP or CALL instruction to a new task, which automatically resets the values of the segment registers and branches to a new code segment.
10. Execute the LIDT instruction to load the IDTR register with the address and limit of the protected-mode IDT.
11. Execute the STI instruction to enable maskable hardware interrupts and perform the necessary hardware operation to enable NMI interrupts.

Random failures can occur if other instructions exist between steps 3 and 4 above. Failures will be readily seen in some situations, such as when instructions that reference memory are inserted between steps 3 and 4 while in system management mode.

10.9.2 Switching Back to Real-Address Mode

The processor switches from protected mode back to real-address mode if software clears the PE bit in the CR0 register with a MOV CR0 instruction. A procedure that re-enters real-address mode should perform the following steps:

1. Disable interrupts. A CLI instruction disables maskable hardware interrupts. NMI interrupts can be disabled with external circuitry.
2. If paging is enabled, perform the following operations:
   - Transfer program control to linear addresses that are identity mapped to physical addresses (that is, linear addresses equal physical addresses).
   - Ensure that the GDT and IDT are in identity mapped pages.
   - Clear the PG bit in the CR0 register.
   - Move 0H into the CR3 register to flush the TLB.
3. Transfer program control to a readable segment that has a limit of 64 KBytes (FFFFH). This operation loads the CS register with the segment limit required in real-address mode.
4. Load segment registers SS, DS, ES, FS, and GS with a selector for a descriptor containing the following values, which are appropriate for real-address mode:
   - Limit = 64 KBytes (0FFFFH)
   - Byte granular (G = 0)
   - Expand up (E = 0)
   - Writable (W = 1)
   - Present (P = 1)
   - Base = any value

   The segment registers must be loaded with non-null segment selectors or the segment registers will be unusable in real-address mode. Note that if the segment registers are not reloaded, execution continues using the descriptor attributes loaded during protected mode.
5. Execute an LIDT instruction to point to a real-address mode interrupt table that is within the 1-MByte real-address mode address range.
6. Clear the PE flag in the CR0 register to switch to real-address mode.
7. Execute a far JMP instruction to jump to a real-address mode program. This operation flushes the instruction queue and loads the appropriate base-address value in the CS register.
8. Load the SS, DS, ES, FS, and GS registers as needed by the real-address mode code. If any of the registers are not going to be used in real-address mode, write 0s to them.
9. Execute the STI instruction to enable maskable hardware interrupts and perform the necessary hardware operation to enable NMI interrupts.

NOTE

All the code that is executed in steps 1 through 9 must be in a single page and the linear addresses in that page must be identity mapped to physical addresses.

10.10 INITIALIZATION AND MODE SWITCHING EXAMPLE

This section provides an initialization and mode switching example that can be incorporated into an application. This code was originally written to initialize the Intel386 processor, but it will execute successfully on the Pentium 4, Intel Xeon, P6 family, Pentium, and Intel486 processors. The code in this example is intended to reside in EPROM and to run following a hardware reset of the processor. The function of the code is to do the following:

- Establish a basic real-address mode operating environment.

- Load the necessary protected-mode system data structures into RAM.
- Load the system registers with the necessary pointers to the data structures and the appropriate flag settings for protected-mode operation.
- Switch the processor to protected mode.

Figure 10-3 shows the physical memory layout for the processor following a hardware reset and the starting point of this example. The EPROM that contains the initialization code resides at the upper end of the processor's physical memory address range, starting at address FFFFFFFFH and going down from there. The address of the first instruction to be executed is at FFFFFFF0H, the default starting address for the processor following a hardware reset.

The main steps carried out in this example are summarized in Table 10-5. The source listing for the example (with the filename STARTUP.ASM) is given in Example 10-1. The line numbers given in Table 10-5 refer to the source listing.

The following are some additional notes concerning this example:

- When the processor is switched into protected mode, the original code segment base-address value of FFFF0000H (located in the hidden part of the CS register) is retained and execution continues from the current offset in the EIP register. The processor will thus continue to execute code in the EPROM until a far jump or call is made to a new code segment, at which time, the base address in the CS register will be changed.
- Maskable hardware interrupts are disabled after a hardware reset and should remain disabled until the necessary interrupt handlers have been installed. The NMI interrupt is not disabled following a reset. The NMI# pin must thus be inhibited from being asserted until an NMI handler has been loaded and made available to the processor.
- The use of a temporary GDT allows simple transfer of tables from the EPROM to anywhere in the RAM area. A GDT entry is constructed with its base pointing to address 0 and a limit of 4 GBytes. When the DS and ES registers are loaded with this descriptor, the temporary GDT is no longer needed and can be replaced by the application GDT.
- This code loads one TSS and no LDTs. If more TSSs exist in the application, they must be loaded into RAM. If there are LDTs they may be loaded as well.

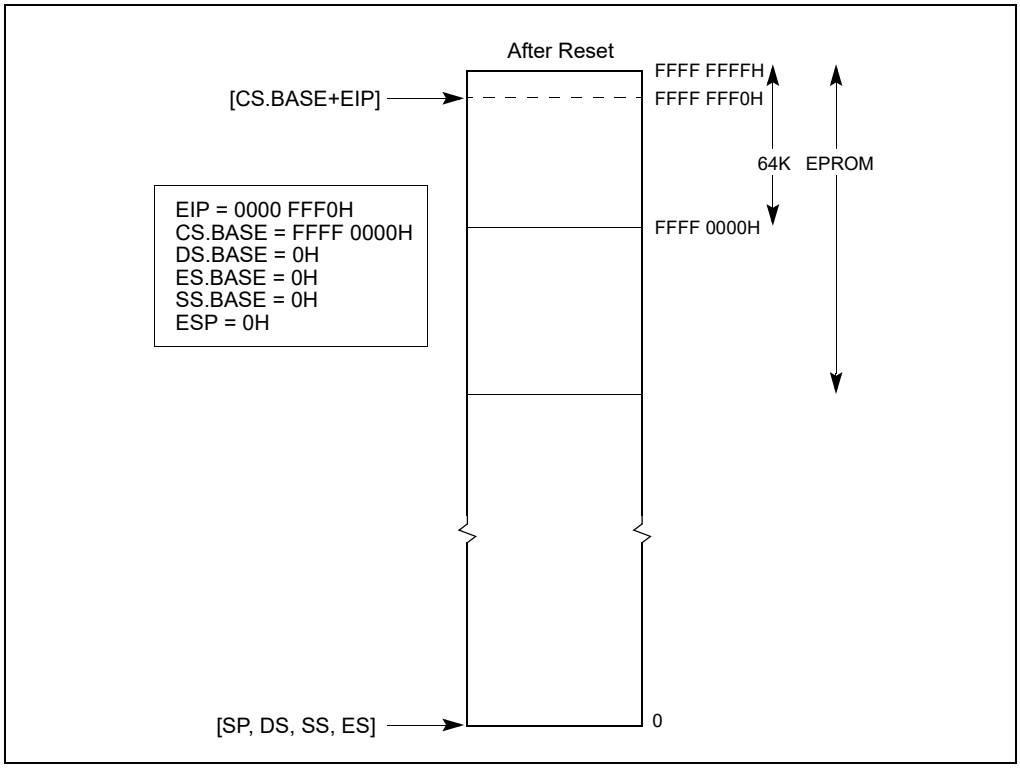

Figure 10-3. Processor State After Reset

Table 10-5. Main Initialization Steps in STARTUP.ASM Source Listing

STARTUP.ASM Line Numbers		Description
From	To	
157	157	Jump (short) to the entry code in the EPROM
162	169	Construct a temporary GDT in RAM with one entry: 0 - null 1 - R/W data segment, base = 0, limit = 4 GBytes
171	172	Load the GDTR to point to the temporary GDT
174	177	Load CR0 with PE flag set to switch to protected mode
179	181	Jump near to clear real mode instruction queue
184	186	Load DS, ES registers with GDT[1] descriptor, so both point to the entire physical memory space
188	195	Perform specific board initialization that is imposed by the new protected mode
196	218	Copy the application's GDT from ROM into RAM
220	238	Copy the application's IDT from ROM into RAM
241	243	Load application's GDTR
244	245	Load application's IDTR
247	261	Copy the application's TSS from ROM into RAM
263	267	Update TSS descriptor and other aliases in GDT (GDT alias or IDT alias)
277	277	Load the task register (without task switch) using LTR instruction
282	286	Load SS, ESP with the value found in the application's TSS
287	287	Push EFLAGS value found in the application's TSS
288	288	Push CS value found in the application's TSS
289	289	Push EIP value found in the application's TSS
290	293	Load DS, ES with the value found in the application's TSS
296	296	Perform IRET; pop the above values and enter the application code

10.10.1 Assembler Usage

In this example, the Intel assembler ASM386 and build tools BLD386 are used to assemble and build the initialization code module. The following assumptions are used when using the Intel ASM386 and BLD386 tools.

- The ASM386 will generate the right operand size opcodes according to the code-segment attribute. The attribute is assigned either by the ASM386 invocation controls or in the code-segment definition.
- If a code segment that is going to run in real-address mode is defined, it must be set to a USE 16 attribute. If a 32-bit operand is used in an instruction in this code segment (for example, MOV EAX, EBX), the assembler automatically generates an operand prefix for the instruction that forces the processor to execute a 32-bit operation, even though its default code-segment attribute is 16-bit.
- Intel's ASM386 assembler allows specific use of the 16- or 32-bit instructions, for example, LGDTW, LGDTD, IRETD. If the generic instruction LGDT is used, the default- segment attribute will be used to generate the right opcode.

10.10.2 STARTUP.ASM Listing

Example 10-1 provides high-level sample code designed to move the processor into protected mode. This listing does not include any opcode and offset information.

Example 10-1. STARTUP.ASM

```
MS-DOS* 5.0(045-N) 386(TM) MACRO ASSEMBLER STARTUP  09:44:51 08/19/92 PAGE 1

MS-DOS 5.0(045-N) 386(TM) MACRO ASSEMBLER V4.0, ASSEMBLY OF MODULE STARTUP
OBJECT MODULE PLACED IN startup.obj
ASSEMBLER INVOKED BY: f:\386tools\ASM386.EXE startup.a58 pw (132 )

LINE     SOURCE

   1      NAME    STARTUP
   2
   3  ;;;;;;;;;;;;;;;;;;;;;;;;;;;;;;;;;;;;;;;;;;;;;;;;
   4  ;
   5  ;   ASSUMPTIONS:
   6  ;
   7  ;      1.  The bottom 64K of memory is ram, and can be used for
   8  ;          scratch space by this module.
   9  ;
  10  ;      2.  The system has sufficient free usable ram to copy the
  11  ;          initial GDT, IDT, and TSS
  12  ;
  13  ;;;;;;;;;;;;;;;;;;;;;;;;;;;;;;;;;;;;;;;;;;;;;;;;;;;;;;;;;;;;;;;;
  14
  15  ; configuration data - must match with build definition
  16
  17  CS_BASE       EQU     0FFFF0000H
  18
  19   ; CS_BASE is the linear address of the segment STARTUP_CODE
  20   ; - this is specified in the build language file
  21
  22  RAM_START     EQU     400H
  23
  24  ; RAM_START  is the start of free, usable ram in the linear
  25  ; memory  space.   The GDT,  IDT, and  initial TSS  will be
  26  ; copied above this space, and a small data segment will be
  27  ; discarded at  this linear  address.   The 32-bit  word at
  28  ; RAM_START will contain  the linear  address of  the first
  29  ; free byte above the copied tables - this may be useful if
  30  ; a memory manager is used.
  31
  32  TSS_INDEX    EQU     10
  33
  34  ; TSS_INDEX is the  index of the  TSS of the  first task to
  35  ; run after startup
  36
  37
  38   ;;;;;;;;;;;;;;;;;;;;;;;;;;;;;;;;;;;;;;;;;;;;;;;;;;;;;;;;;;;;;;;;
  39
  40  ; ------------------------- STRUCTURES and EQU ---------------
  41  ; structures for system data
  42
  43  ; TSS structure
  44  TASK_STATE  STRUC
  45      link     DW ?
```

```
46      link_h    DW ?
47      ESP0      DD ?
48      SS0       DW ?
49      SS0_h     DW ?
50      ESP1      DD ?
51      SS1       DW ?
52      SS1_h     DW ?
53      ESP2      DD ?
54      SS2       DW ?
55      SS2_h     DW ?
56      CR3_reg   DD ?
57      EIP_reg   DD ?
58      EFLAGS_regDD ?
59      EAX_reg   DD ?
60      ECX_reg   DD ?
61      EDX_reg   DD ?
62      EBX_reg   DD ?
63      ESP_reg   DD ?
64      EBP_reg   DD ?
65      ESI_reg   DD ?
66      EDI_reg   DD ?
67      ES_reg    DW ?
68      ES_h      DW ?
69      CS_reg    DW ?
70      CS_h      DW ?
71      SS_reg    DW ?
72      SS_h      DW ?
73      DS_reg    DW ?
74      DS_h      DW ?
75      FS_reg    DW ?
76      FS_h      DW ?
77      GS_reg    DW ?
78      GS_h      DW ?
79      LDT_reg   DW ?
80      LDT_h     DW ?
81      TRAP_reg  DW ?
82      IO_map_baseDW ?
83  TASK_STATE   ENDS
84
85  ; basic structure of a descriptor
86  DESC    STRUC
87      lim_0_15  DW ?
88      bas_0_15  DW ?
89      bas_16_23 DB ?
90      access    DB ?
91      gran      DB ?
92      bas_24_31 DB ?
93  DESC    ENDS
94
95  ; structure for use with LGDT and LIDT instructions
96  TABLE_REG   STRUC
97      table_limDW ?
98      table_linearDD ?
99  TABLE_REG   ENDS
```

```
100
101  ; offset of GDT and IDT descriptors in builder generated GDT
102  GDT_DESC_OFF    EQU 1*SIZE(DESC)
103  IDT_DESC_OFF    EQU 2*SIZE(DESC)
104
105  ; equates for building temporary GDT in RAM
106  LINEAR_SEL          EQU     1*SIZE (DESC)
107  LINEAR_PROTO_LO     EQU     00000FFFFH  ; LINEAR_ALIAS
108  LINEAR_PROTO_HI     EQU     000CF9200H
109
110  ; Protection Enable Bit in CR0
111  PE_BIT  EQU 1B
112
113  ; -------------------------------------------------------------
114
115  ; ------------------------- DATA SEGMENT----------------------
116
117  ; Initially, this  data segment starts at linear 0, according
118  ; to the processor's power-up state.
119
120  STARTUP_DATA    SEGMENT RW
121
122  free_mem_linear_base    LABEL   DWORD
123  TEMP_GDT                LABEL   BYTE  ; must be first in segment
124  TEMP_GDT_NULL_DESC   DESC    <>
125  TEMP_GDT_LINEAR_DESC DESC    <>
126
127  ; scratch areas for LGDT and LIDT instructions
128  TEMP_GDT_SCRATCH TABLE_REG   <>
129  APP_GDT_RAM     TABLE_REG    <>
130  APP_IDT_RAM     TABLE_REG    <>
131          ; align end_data
132  fill    DW      ?
133
134  ; last thing in this segment - should be on a dword boundary
135  end_data    LABEL   BYTE
136
137  STARTUP_DATA    ENDS
138  ; -------------------------------------------------------------
139
140
141  ; ------------------------- CODE SEGMENT----------------------
142  STARTUP_CODE SEGMENT ER PUBLIC USE16
143
144  ; filled in by builder
145      PUBLIC  GDT_EPROM
146  GDT_EPROM   TABLE_REG   <>
147
148  ; filled in by builder
149      PUBLIC  IDT_EPROM
150  IDT_EPROM   TABLE_REG   <>
151
152  ; entry point into startup code - the bootstrap will vector
153  ; here  with a  near JMP  generated by  the builder.   This
```

```
154  ; label must be in the top 64K of linear memory.
155
156      PUBLIC  STARTUP
157  STARTUP:
158
159  ; DS,ES address the bottom 64K of flat linear memory
160      ASSUME  DS:STARTUP_DATA, ES:STARTUP_DATA
161  ; See Figure 10-4
162  ; load GDTR with temporary GDT
163          LEA     EBX,TEMP_GDT  ; build the TEMP_GDT in low ram,
164          MOV     DWORD PTR [EBX],0   ; where we can address
165          MOV     DWORD PTR [EBX]+4,0
166          MOV     DWORD PTR [EBX]+8, LINEAR_PROTO_LO
167          MOV     DWORD PTR [EBX]+12, LINEAR_PROTO_HI
168          MOV     TEMP_GDT_scratch.table_linear,EBX
169          MOV     TEMP_GDT_scratch.table_lim,15
170
171          DB 66H; execute a 32 bit LGDT
172          LGDT    TEMP_GDT_scratch
173
174  ; enter protected mode
175          MOV     EBX,CR0
176          OR      EBX,PE_BIT
177          MOV     CR0,EBX
178

179   ; clear prefetch queue
180          JMP     CLEAR_LABEL
181  CLEAR_LABEL:
182
183   ; make DS and ES address 4G of linear memory
184          MOV     CX,LINEAR_SEL
185          MOV     DS,CX
186          MOV     ES,CX
187
188    ; do board specific initialization
189    ;
190                  ;
191                  ; ......
192                  ;
193
194
195          ; See Figure 10-5
196          ; copy EPROM GDT to ram at:
197          ;                RAM_START + size (STARTUP_DATA)
198          MOV     EAX,RAM_START
199          ADD     EAX,OFFSET (end_data)
200          MOV     EBX,RAM_START
201          MOV     ECX, CS_BASE
202          ADD     ECX, OFFSET (GDT_EPROM)
203          MOV     ESI, [ECX].table_linear
204          MOV     EDI,EAX
205          MOVZX   ECX, [ECX].table_lim
206          MOV     APP_GDT_ram[EBX].table_lim,CX
```

```
207          INC     ECX
208          MOV     EDX,EAX
209          MOV     APP_GDT_ram[EBX].table_linear,EAX
210          ADD     EAX,ECX
211      REP MOVS    BYTE PTR ES:[EDI],BYTE PTR DS:[ESI]
212
213          ; fixup GDT base in descriptor
214          MOV     ECX,EDX
215          MOV     [EDX].bas_0_15+GDT_DESC_OFF,CX
216          ROR     ECX,16
217          MOV     [EDX].bas_16_23+GDT_DESC_OFF,CL
218          MOV     [EDX].bas_24_31+GDT_DESC_OFF,CH
219
220          ; copy EPROM IDT to ram at:
221          ; RAM_START+size(STARTUP_DATA)+SIZE (EPROM GDT)
222          MOV     ECX, CS_BASE
223          ADD     ECX, OFFSET (IDT_EPROM)
224          MOV     ESI, [ECX].table_linear
225          MOV     EDI,EAX
226          MOVZX   ECX, [ECX].table_lim
227          MOV     APP_IDT_ram[EBX].table_lim,CX
228          INC     ECX
229          MOV     APP_IDT_ram[EBX].table_linear,EAX
230          MOV     EBX,EAX
231          ADD     EAX,ECX
232      REP MOVS    BYTE PTR ES:[EDI],BYTE PTR DS:[ESI]
233
234                  ; fixup IDT pointer in GDT
235          MOV     [EDX].bas_0_15+IDT_DESC_OFF,BX
236          ROR     EBX,16
237          MOV     [EDX].bas_16_23+IDT_DESC_OFF,BL
238          MOV     [EDX].bas_24_31+IDT_DESC_OFF,BH
239
240                  ; load GDTR and IDTR
241          MOV     EBX,RAM_START
242                  DB      66H         ; execute a 32 bit LGDT
243          LGDT    APP_GDT_ram[EBX]
244                  DB      66H         ; execute a 32 bit LIDT
245          LIDT    APP_IDT_ram[EBX]
246
247                  ; move the TSS
248          MOV     EDI,EAX
249          MOV     EBX,TSS_INDEX*SIZE(DESC)
250          MOV     ECX,GDT_DESC_OFF ;build linear address for TSS
251          MOV     GS,CX
252          MOV     DH,GS:[EBX].bas_24_31
253          MOV     DL,GS:[EBX].bas_16_23
254          ROL     EDX,16
255          MOV     DX,GS:[EBX].bas_0_15
256          MOV     ESI,EDX
257          LSL     ECX,EBX
258          INC     ECX
259          MOV     EDX,EAX
260          ADD     EAX,ECX
```

```
 261      REP MOVS    BYTE PTR ES:[EDI],BYTE PTR DS:[ESI]
 262
 263                  ; fixup TSS pointer
 264          MOV     GS:[EBX].bas_0_15,DX
 265          ROL     EDX,16
 266          MOV     GS:[EBX].bas_24_31,DH
 267          MOV     GS:[EBX].bas_16_23,DL
 268          ROL     EDX,16
 269      ;save start of free ram at linear location RAMSTART
 270          MOV     free_mem_linear_base+RAM_START,EAX
 271
 272      ;assume no  LDT used in  the initial task  - if necessary,
 273      ;code  to move the LDT could be added, and should resemble
 274      ;that used to move the TSS
 275
 276      ; load task register
 277          LTR     BX   ; No task switch, only descriptor loading
 278      ; See Figure 10-6
 279      ; load minimal set of registers necessary to simulate task
 280      ; switch
 281
 282
 283          MOV     AX,[EDX].SS_reg     ; start loading registers
 284          MOV     EDI,[EDX].ESP_reg
 285          MOV     SS,AX
 286          MOV     ESP,EDI             ; stack now valid
 287          PUSH    DWORD PTR [EDX].EFLAGS_reg
 288          PUSH    DWORD PTR [EDX].CS_reg
 289          PUSH    DWORD PTR [EDX].EIP_reg
 290          MOV     AX,[EDX].DS_reg
 291          MOV     BX,[EDX].ES_reg
 292          MOV     DS,AX     ; DS and ES no longer linear memory
 293          MOV     ES,BX
 294
 295          ; simulate far jump to initial task
 296          IRETD
 297
 298  STARTUP_CODE  ENDS
*** WARNING #377 IN 298, (PASS 2) SEGMENT CONTAINS PRIVILEGED INSTRUCTION(S)
 299
 300  END STARTUP, DS:STARTUP_DATA, SS:STARTUP_DATA
 301
 302

ASSEMBLY COMPLETE,   1 WARNING,   NO ERRORS.
```

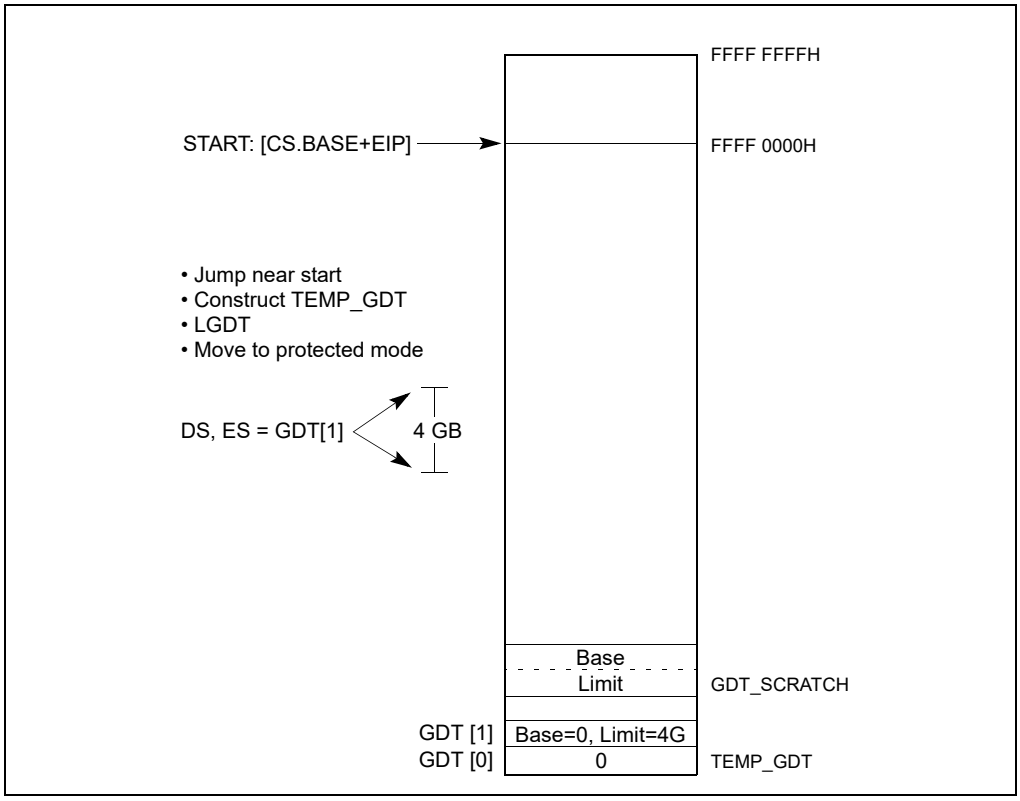

Figure 10-4. Constructing Temporary GDT and Switching to Protected Mode (Lines 162-172 of List File)

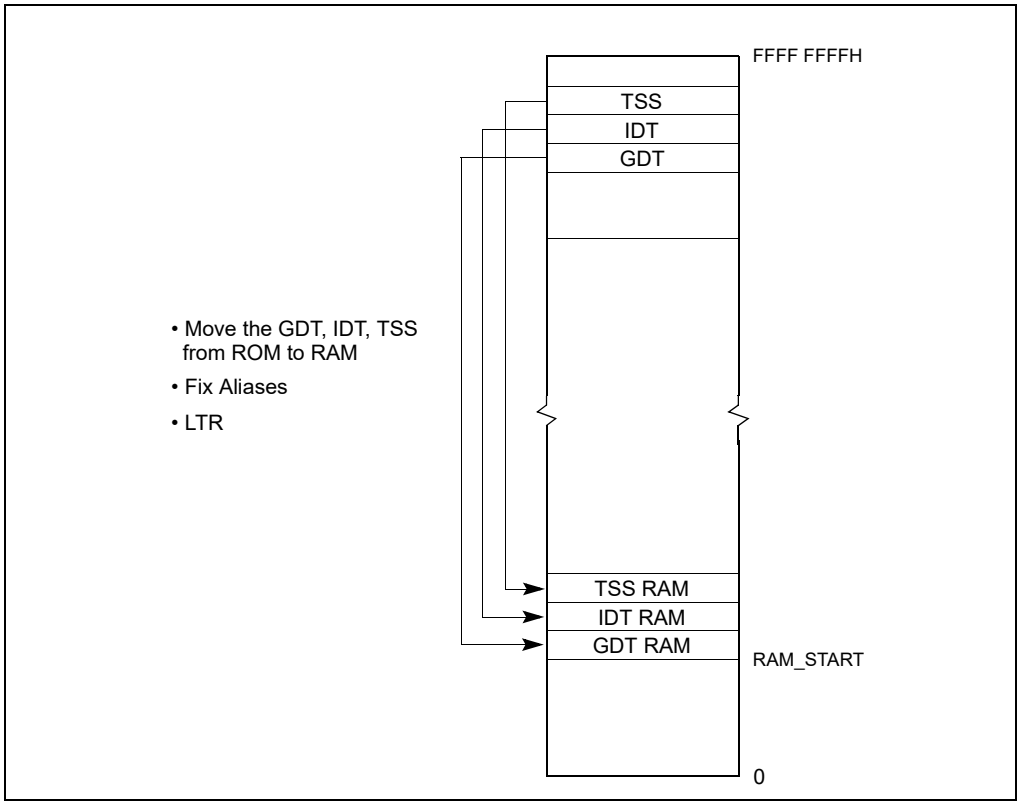

Figure 10-5. Moving the GDT, IDT, and TSS from ROM to RAM (Lines 196-261 of List File)

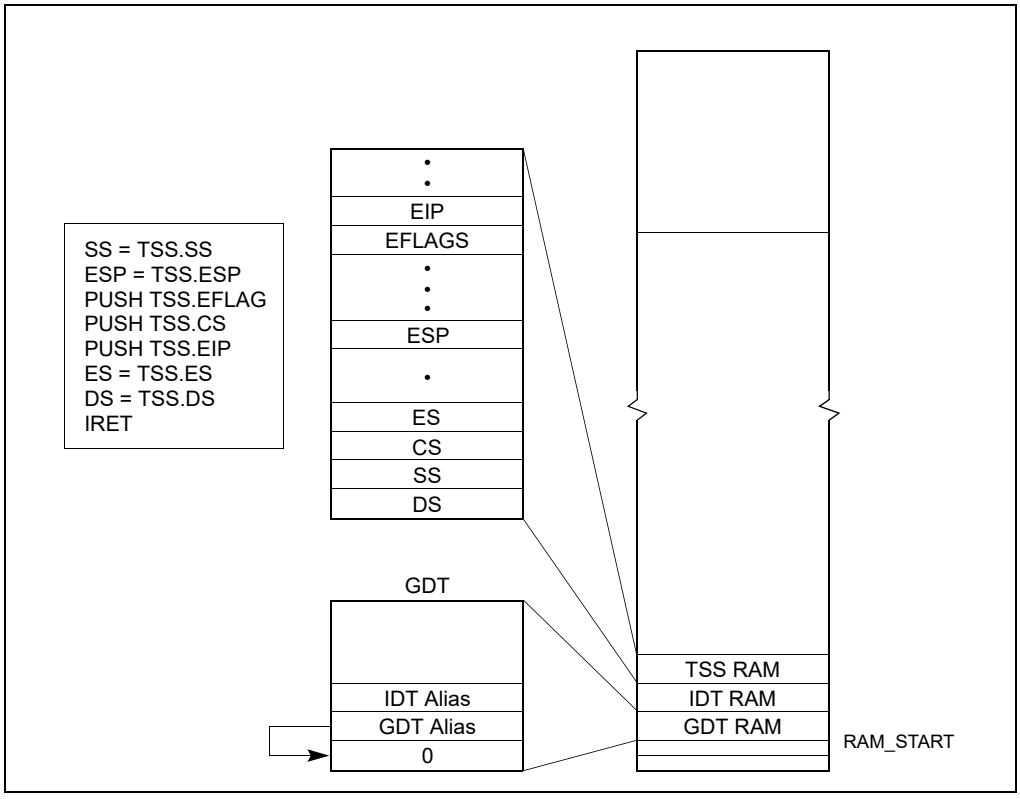

Figure 10-6. Task Switching (Lines 282-296 of List File)

10.10.3 MAIN.ASM Source Code

The file MAIN.ASM shown in Example 10-2 defines the data and stack segments for this application and can be substituted with the main module task written in a high-level language that is invoked by the IRET instruction executed by STARTUP.ASM.

Example 10-2. MAIN.ASM

```
NAME    main_module
data    SEGMENT RW
   dw 1000 dup(?)
DATA    ENDS
stack stackseg 800
CODE SEGMENT ER  use32 PUBLIC
main_start:
   nop
   nop
   nop
CODE  ENDS
END main_start, ds:data, ss:stack
```

10.10.4 Supporting Files

The batch file shown in Example 10-3 can be used to assemble the source code files STARTUP.ASM and MAIN.ASM and build the final application.

Example 10-3. Batch File to Assemble and Build the Application

```
ASM386 STARTUP.ASM
ASM386 MAIN.ASM
BLD386 STARTUP.OBJ, MAIN.OBJ buildfile(EPROM.BLD) bootstrap(STARTUP) Bootload

BLD386 performs several operations in this example:
It allocates physical memory location to segments and tables.
It generates tables using the build file and the input files.
It links object files and resolves references.
It generates a boot-loadable file to be programmed into the EPROM.
```

Example 10-4 shows the build file used as an input to BLD386 to perform the above functions.

Example 10-4. Build File

```
INIT_BLD_EXAMPLE;

SEGMENT
        *SEGMENTS(DPL = 0)
    ,   startup.startup_code(BASE = 0FFFF0000H)
    ;

TASK
        BOOT_TASK(OBJECT = startup, INITIAL,DPL = 0,
                    NOT INTENABLED)
,       PROTECTED_MODE_TASK(OBJECT = main_module,DPL = 0,
                    NOT INTENABLED)
    ;

TABLE
    GDT (
        LOCATION = GDT_EPROM
    ,   ENTRY = (
            10:   PROTECTED_MODE_TASK
    ,        startup.startup_code
    ,       startup.startup_data
    ,       main_module.data
    ,       main_module.code
    ,       main_module.stack
             )
        ),

    IDT (
        LOCATION = IDT_EPROM
        );

MEMORY
    (
        RESERVE = (0..3FFFH
                -- Area for the GDT, IDT, TSS copied from ROM
    ,              60000H..0FFFEFFFFH)
    ,   RANGE = (ROM_AREA = ROM (0FFFF0000H..0FFFFFFFFH))
                   -- Eprom size 64K
    ,   RANGE = (RAM_AREA = RAM (4000H..05FFFFH))
```

```
    );

END
```

Table 10-6 shows the relationship of each build item with an ASM source file.

Table 10-6. Relationship Between BLD Item and ASM Source File

Item	ASM386 and Startup.A58	BLD386 Controls and BLD file	Effect
Bootstrap	public startup startup:	bootstrap start(startup)	Near jump at 0FFFFFFF0H to start.
GDT location	public GDT_EPROM GDT_EPROM TABLE_REG <>	TABLE GDT(location = GDT_EPROM)	The location of the GDT will be programmed into the GDT_EPROM location.
IDT location	public IDT_EPROM IDT_EPROM TABLE_REG <>	TABLE IDT(location = IDT_EPROM	The location of the IDT will be programmed into the IDT_EPROM location.
RAM start	RAM_START equ 400H	memory (reserve = (0..3FFFH))	RAM_START is used as the ram destination for moving the tables. It must be excluded from the application's segment area.
Location of the application TSS in the GDT	TSS_INDEX EQU 10	TABLE GDT(ENTRY = (10: PROTECTED_MODE_ TASK))	Put the descriptor of the application TSS in GDT entry 10.
EPROM size and location	size and location of the initialization code	SEGMENT startup.code (base = 0FFFF0000H) ...memory (RANGE(ROM_AREA = ROM(x..y))	Initialization code size must be less than 64K and resides at upper most 64K of the 4-GByte memory space.

10.11 MICROCODE UPDATE FACILITIES

The P6 family and later processors have the capability to correct errata by loading an Intel-supplied data block into the processor. The data block is called a microcode update. This section describes the mechanisms the BIOS needs to provide in order to use this feature during system initialization. It also describes a specification that permits the incorporation of future updates into a system BIOS.

Intel considers the release of a microcode update for a silicon revision to be the equivalent of a processor stepping and completes a full-stepping level validation for releases of microcode updates.

A microcode update is used to correct errata in the processor. The BIOS, which has an update loader, is responsible for loading the update on processors during system initialization (Figure 10-7). There are two steps to this process: the first is to incorporate the necessary update data blocks into the BIOS; the second is to load update data blocks into the processor.

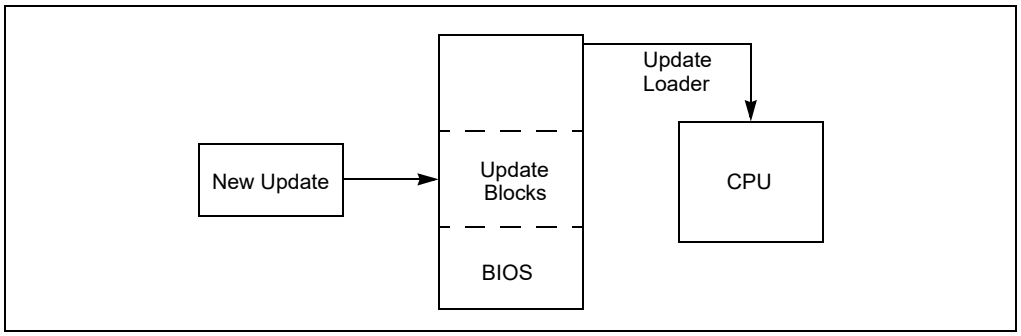

Figure 10-7. Applying Microcode Updates

10.11.1 Microcode Update

A microcode update consists of an Intel-supplied binary that contains a descriptive header and data. No executable code resides within the update. Each microcode update is tailored for a specific list of processor signatures. A mismatch of the processor's signature with the signature contained in the update will result in a failure to load. A processor signature includes the extended family, extended model, type, family, model, and stepping of the processor (starting with processor family 0fH, model 03H, a given microcode update may be associated with one of multiple processor signatures; see Section 10.11.2 for details).

Microcode updates are composed of a multi-byte header, followed by encrypted data and then by an optional extended signature table. Table 10-7 provides a definition of the fields; Table 10-8 shows the format of an update.

The header is 48 bytes. The first 4 bytes of the header contain the header version. The update header and its reserved fields are interpreted by software based upon the header version. An encoding scheme guards against tampering and provides a means for determining the authenticity of any given update. For microcode updates with a data size field equal to 00000000H, the size of the microcode update is 2048 bytes. The first 48 bytes contain the microcode update header. The remaining 2000 bytes contain encrypted data.

For microcode updates with a data size not equal to 00000000H, the total size field specifies the size of the micro-code update. The first 48 bytes contain the microcode update header. The second part of the microcode update is the encrypted data. The data size field of the microcode update header specifies the encrypted data size, its value must be a multiple of the size of DWORD. The total size field of the microcode update header specifies the encrypted data size plus the header size; its value must be in multiples of 1024 bytes (1 KBytes). The optional extended signature table if implemented follows the encrypted data, and its size is calculated by (Total Size – (Data Size + 48)).

NOTE

The optional extended signature table is supported starting with processor family 0FH, model 03H.

.

Table 10-7. Microcode Update Field Definitions

Field Name	Offset (bytes)	Length (bytes)	Description
Header Version	0	4	Version number of the update header.
Update Revision	4	4	Unique version number for the update, the basis for the update signature provided by the processor to indicate the current update functioning within the processor. Used by the BIOS to authenticate the update and verify that the processor loads successfully. The value in this field cannot be used for processor stepping identification alone. This is a signed 32-bit number.
Date	8	4	Date of the update creation in binary format: mmddyyyy (e.g., 07/18/98 is 07181998H).

Table 10-7. Microcode Update Field Definitions (Contd.)

Field Name	Offset (bytes)	Length (bytes)	Description
Processor Signature	12	4	*Extended family, extended model, type, family, model*, and *stepping* of processor that requires this particular update revision (e.g., 00000650H). Each microcode update is designed specifically for a given extended family, extended model, *type, family, model*, and *stepping* of the processor. Software should use the processor signature field in conjunction with the CPUID instruction to determine whether or not an update is appropriate to load on a processor. The information encoded within this field exactly corresponds to the bit representations returned by the CPUID instruction.
Checksum	16	4	Checksum of Update Data and Header. Used to verify the integrity of the update header and data. Checksum is correct when the summation of all the DWORDs (including the extended Processor Signature Table) that comprise the microcode update result in 00000000H.
Loader Revision	20	4	Version number of the loader program needed to correctly load this update. The initial version is 00000001H.
Processor Flags	24	4	Platform type information is encoded in the lower 8 bits of this 4-byte field. Each bit represents a particular platform type for a given CPUID. Software should use the processor flags field in conjunction with the platform Id bits in MSR (17H) to determine whether or not an update is appropriate to load on a processor. Multiple bits may be set representing support for multiple platform IDs.
Data Size	28	4	Specifies the size of the encrypted data in bytes, and must be a multiple of DWORDs. If this value is 00000000H, then the microcode update encrypted data is 2000 bytes (or 500 DWORDs).
Total Size	32	4	Specifies the total size of the microcode update in bytes. It is the summation of the header size, the encrypted data size and the size of the optional extended signature table. This value is always a multiple of 1024.
Reserved	36	12	Reserved fields for future expansion.
Update Data	48	Data Size or 2000	Update data.
Extended Signature Count	Data Size + 48	4	Specifies the number of extended signature structures (Processor Signature[n], processor flags[n] and checksum[n]) that exist in this microcode update.
Extended Checksum	Data Size + 52	4	Checksum of update extended processor signature table. Used to verify the integrity of the extended processor signature table. Checksum is correct when the summation of the DWORDs that comprise the extended processor signature table results in 00000000H.
Reserved	Data Size + 56	12	Reserved fields.

Table 10-7. Microcode Update Field Definitions (Contd.)

Field Name	Offset (bytes)	Length (bytes)	Description
Processor Signature[n]	Data Size + 68 + (n * 12)	4	*Extended family, extended model, type, family, model*, and *stepping* of processor that requires this particular update revision (e.g., 00000650H). Each microcode update is designed specifically for a given extended family, extended model, *type, family, model*, and *stepping* of the processor. Software should use the processor signature field in conjunction with the CPUID instruction to determine whether or not an update is appropriate to load on a processor. The information encoded within this field exactly corresponds to the bit representations returned by the CPUID instruction.
Processor Flags[n]	Data Size + 72 + (n * 12)	4	Platform type information is encoded in the lower 8 bits of this 4-byte field. Each bit represents a particular platform type for a given CPUID. Software should use the processor flags field in conjunction with the platform Id bits in MSR (17H) to determine whether or not an update is appropriate to load on a processor. Multiple bits may be set representing support for multiple platform IDs.
Checksum[n]	Data Size + 76 + (n * 12)	4	Used by utility software to decompose a microcode update into multiple microcode updates where each of the new updates is constructed without the optional Extended Processor Signature Table. To calculate the Checksum, substitute the Primary Processor Signature entry and the Processor Flags entry with the corresponding Extended Patch entry. Delete the Extended Processor Signature Table entries. The Checksum is correct when the summation of all DWORDs that comprise the created Extended Processor Patch results in 00000000H.

Table 10-8. Microcode Update Format

31 24	16	8	0	Bytes
Header Version				0
Update Revision				4
Month: 8	Day: 8	Year: 16		8
Processor Signature (CPUID)				12
Res: 4 / Extended Family: 8 / Extended Mode: 4 / Reserved: 2 / Type: 2 / Family: 4 / Model: 4 / Stepping: 4				
Checksum				16
Loader Revision				20
Processor Flags				24
Reserved (24 bits)			P7 P6 P5 P4 P3 P2 P1 P0	
Data Size				28
Total Size				32
Reserved (12 Bytes)				36

Table 10-8. Microcode Update Format (Contd.)

31 24 16 8 0	Bytes
Update Data (Data Size bytes, or 2000 Bytes if Data Size = 00000000H)	48
Extended Signature Count 'n'	Data Size + 48
Extended Processor Signature Table Checksum	Data Size + 52
Reserved (12 Bytes)	Data Size + 56
Processor Signature[n]	Data Size + 68 + (n * 12)
Processor Flags[n]	Data Size + 72 + (n * 12)
Checksum[n]	Data Size + 76 + (n * 12)

10.11.2 Optional Extended Signature Table

The extended signature table is a structure that may be appended to the end of the encrypted data when the encrypted data only supports a single processor signature (optional case). The extended signature table will always be present when the encrypted data supports multiple processor steppings and/or models (required case).

The extended signature table consists of a 20-byte extended signature header structure, which contains the extended signature count, the extended processor signature table checksum, and 12 reserved bytes (Table 10-9). Following the extended signature header structure, the extended signature table contains 0-to-n extended processor signature structures.

Each processor signature structure consist of the processor signature, processor flags, and a checksum (Table 10-10).

The extended signature count in the extended signature header structure indicates the number of processor signature structures that exist in the extended signature table.

The extended processor signature table checksum is a checksum of all DWORDs that comprise the extended signature table. That includes the extended signature count, extended processor signature table checksum, 12 reserved bytes and the n processor signature structures. A valid extended signature table exists when the result of a DWORD checksum is 00000000H.

Table 10-9. Extended Processor Signature Table Header Structure

Extended Signature Count 'n'	Data Size + 48
Extended Processor Signature Table Checksum	Data Size + 52
Reserved (12 Bytes)	Data Size + 56

Table 10-10. Processor Signature Structure

Processor Signature[n]	Data Size + 68 + (n * 12)
Processor Flags[n]	Data Size + 72 + (n * 12)
Checksum[n]	Data Size + 76 + (n * 12)

10.11.3 Processor Identification

Each microcode update is designed to for a specific processor or set of processors. To determine the correct microcode update to load, software must ensure that one of the processor signatures embedded in the microcode update matches the 32-bit processor signature returned by the CPUID instruction when executed by the target processor with EAX = 1. Attempting to load a microcode update that does not match a processor signature embedded in the microcode update with the processor signature returned by CPUID will cause the BIOS to reject the update.

Example 10-5 shows how to check for a valid processor signature match between the processor and microcode update.

Example 10-5. Pseudo Code to Validate the Processor Signature

```
ProcessorSignature ← CPUID(1):EAX

If (Update.HeaderVersion = 00000001h)
{
       // first check the ProcessorSignature field
   If (ProcessorSignature = Update.ProcessorSignature)
       Success

       // if extended signature is present
   Else If (Update.TotalSize > (Update.DataSize + 48))
   {

       //
       // Assume the Data Size has been used to calculate the
       // location of Update.ProcessorSignature[0].
       //

       For (N ← 0; ((N < Update.ExtendedSignatureCount) AND
           (ProcessorSignature ≠ Update.ProcessorSignature[N])); N++);

           // if the loops ended when the iteration count is
           // less than the number of processor signatures in
           // the table, we have a match
       If (N < Update.ExtendedSignatureCount)
           Success
       Else
           Fail
   }
   Else
       Fail
Else
   Fail
```

10.11.4 Platform Identification

In addition to verifying the processor signature, the intended processor platform type must be determined to properly target the microcode update. The intended processor platform type is determined by reading the IA32_PLATFORM_ID register, (MSR 17H). This 64-bit register must be read using the RDMSR instruction.

The three platform ID bits, when read as a binary coded decimal (BCD) number, indicate the bit position in the microcode update header's processor flags field associated with the installed processor. The processor flags in the 48-byte header and the processor flags field associated with the extended processor signature structures may have multiple bits set. Each set bit represents a different platform ID that the update supports.

Register Name: IA32_PLATFORM_ID
MSR Address: 017H

Access: Read Only

IA32_PLATFORM_ID is a 64-bit register accessed only when referenced as a Qword through a RDMSR instruction.

Table 10-11. Processor Flags

Bit	Descriptions
63:53	Reserved
52:50	Platform Id Bits (RO). The field gives information concerning the intended platform for the processor. See also Table 10-8. 52 51 50 0 0 0 Processor Flag 0 0 0 1 Processor Flag 1 0 1 0 Processor Flag 2 0 1 1 Processor Flag 3 1 0 0 Processor Flag 4 1 0 1 Processor Flag 5 1 1 0 Processor Flag 6 1 1 1 Processor Flag 7
49:0	Reserved

To validate the platform information, software may implement an algorithm similar to the algorithms in Example 10-6.

Example 10-6. Pseudo Code Example of Processor Flags Test

```
Flag ← 1 << IA32_PLATFORM_ID[52:50]

If (Update.HeaderVersion = 00000001h)
{
    If (Update.ProcessorFlags & Flag)
    {
       Load Update
    }
    Else
    {

       //
       // Assume the Data Size has been used to calculate the
       // location of Update.ProcessorSignature[N] and a match
       // on Update.ProcessorSignature[N] has already succeeded
       //

       If (Update.ProcessorFlags[n] & Flag)
       {
          Load Update
       }
    }
}
```

10.11.5 Microcode Update Checksum

Each microcode update contains a DWORD checksum located in the update header. It is software's responsibility to ensure that a microcode update is not corrupt. To check for a corrupt microcode update, software must perform a

unsigned DWORD (32-bit) checksum of the microcode update. Even though some fields are signed, the checksum procedure treats all DWORDs as unsigned. Microcode updates with a header version equal to 00000001H must sum all DWORDs that comprise the microcode update. A valid checksum check will yield a value of 00000000H. Any other value indicates the microcode update is corrupt and should not be loaded.

The checksum algorithm shown by the pseudo code in Example 10-7 treats the microcode update as an array of unsigned DWORDs. If the data size DWORD field at byte offset 32 equals 00000000H, the size of the encrypted data is 2000 bytes, resulting in 500 DWORDs. Otherwise the microcode update size in DWORDs = (*Total Size / 4*), where the total size is a multiple of 1024 bytes (1 KBytes).

Example 10-7. Pseudo Code Example of Checksum Test

```
N ← 512

If (Update.DataSize ≠ 00000000H)
   N ← Update.TotalSize / 4

ChkSum ← 0
For (I ← 0; I < N; I++)
{
   ChkSum ← ChkSum + MicrocodeUpdate[I]
}

If (ChkSum = 00000000H)
   Success
Else
   Fail
```

10.11.6 Microcode Update Loader

This section describes an update loader used to load an update into a P6 family or later processors. It also discusses the requirements placed on the BIOS to ensure proper loading. The update loader described contains the minimal instructions needed to load an update. The specific instruction sequence that is required to load an update is dependent upon the loader revision field contained within the update header. This revision is expected to change infrequently (potentially, only when new processor models are introduced).

Example 10-8 below represents the update loader with a loader revision of 00000001H. Note that the microcode update must be aligned on a 16-byte boundary and the size of the microcode update must be 1-KByte granular.

Example 10-8. Assembly Code Example of Simple Microcode Update Loader

```
mov   ecx,79h              ; MSR to write in ECX
xor   eax,eax              ; clear EAX
xor   ebx,ebx              ; clear EBX
mov   ax,cs                ; Segment of microcode update
shl   eax,4
mov   bx,offset Update     ; Offset of microcode update
add   eax,ebx              ; Linear Address of Update in EAX
add   eax,48d              ; Offset of the Update Data within the Update
xor   edx,edx              ; Zero in EDX
WRMSR                     ; microcode update trigger
```

The loader shown in Example 10-8 assumes that *update* is the address of a microcode update (header and data) embedded within the code segment of the BIOS. It also assumes that the processor is operating in real mode. The data may reside anywhere in memory, aligned on a 16-byte boundary, that is accessible by the processor within its current operating mode.

Before the BIOS executes the microcode update trigger (WRMSR) instruction, the following must be true:

- In 64-bit mode, EAX contains the lower 32-bits of the microcode update linear address. In protected mode, EAX contains the full 32-bit linear address of the microcode update.
- In 64-bit mode, EDX contains the upper 32-bits of the microcode update linear address. In protected mode, EDX equals zero.
- ECX contains 79H (address of IA32_BIOS_UPDT_TRIG).

Other requirements are:

- The addresses for the microcode update data must be in canonical form.
- If paging is enabled, the microcode update data must map that data as present.
- The microcode update data must start at a 16-byte aligned linear address.

10.11.6.1 Hard Resets in Update Loading

The effects of a loaded update are cleared from the processor upon a hard reset. Therefore, each time a hard reset is asserted during the BIOS POST, the update must be reloaded on all processors that observed the reset. The effects of a loaded update are, however, maintained across a processor INIT. There are no side effects caused by loading an update into a processor multiple times.

10.11.6.2 Update in a Multiprocessor System

A multiprocessor (MP) system requires loading each processor with update data appropriate for its CPUID and platform ID bits. The BIOS is responsible for ensuring that this requirement is met and that the loader is located in a module executed by all processors in the system. If a system design permits multiple steppings of Pentium 4, Intel Xeon, and P6 family processors to exist concurrently; then the BIOS must verify individual processors against the update header information to ensure appropriate loading. Given these considerations, it is most practical to load the update during MP initialization.

10.11.6.3 Update in a System Supporting Intel Hyper-Threading Technology

Intel Hyper-Threading Technology has implications on the loading of the microcode update. The update must be loaded for each core in a physical processor. Thus, for a processor supporting Intel Hyper-Threading Technology, only one logical processor per core is required to load the microcode update. Each individual logical processor can independently load the update. However, MP initialization must provide some mechanism (e.g., a software semaphore) to force serialization of microcode update loads and to prevent simultaneous load attempts to the same core.

10.11.6.4 Update in a System Supporting Dual-Core Technology

Dual-core technology has implications on the loading of the microcode update. The microcode update facility is not shared between processor cores in the same physical package. The update must be loaded for each core in a physical processor.

If processor core supports Intel Hyper-Threading Technology, the guideline described in Section 10.11.6.3 also applies.

10.11.6.5 Update Loader Enhancements

The update loader presented in Section 10.11.6, “Microcode Update Loader,” is a minimal implementation that can be enhanced to provide additional functionality. Potential enhancements are described below:

- BIOS can incorporate multiple updates to support multiple steppings of the Pentium 4, Intel Xeon, and P6 family processors. This feature provides for operating in a mixed stepping environment on an MP system and enables a user to upgrade to a later version of the processor. In this case, modify the loader to check the CPUID and platform ID bits of the processor that it is running on against the available headers before loading a particular update. The number of updates is only limited by available BIOS space.

- A loader can load the update and test the processor to determine if the update was loaded correctly. See Section 10.11.7, "Update Signature and Verification."
- A loader can verify the integrity of the update data by performing a checksum on the double words of the update summing to zero. See Section 10.11.5, "Microcode Update Checksum."
- A loader can provide power-on messages indicating successful loading of an update.

10.11.7 Update Signature and Verification

The P6 family and later processors provide capabilities to verify the authenticity of a particular update and to identify the current update revision. This section describes the model-specific extensions of processors that support this feature. The update verification method below assumes that the BIOS will only verify an update that is more recent than the revision currently loaded in the processor.

CPUID returns a value in a model specific register in addition to its usual register return values. The semantics of CPUID cause it to deposit an update ID value in the 64-bit model-specific register at address 08BH (IA32_BIOS_SIGN_ID). If no update is present in the processor, the value in the MSR remains unmodified. The BIOS must pre-load a zero into the MSR before executing CPUID. If a read of the MSR at 8BH still returns zero after executing CPUID, this indicates that no update is present.

The update ID value returned in the EDX register after RDMSR executes indicates the revision of the update loaded in the processor. This value, in combination with the CPUID value returned in the EAX register, uniquely identifies a particular update. The signature ID can be directly compared with the update revision field in a microcode update header for verification of a correct load. No consecutive updates released for a given stepping of a processor may share the same signature. The processor signature returned by CPUID differentiates updates for different steppings.

10.11.7.1 Determining the Signature

An update that is successfully loaded into the processor provides a signature that matches the update revision of the currently functioning revision. This signature is available any time after the actual update has been loaded. Requesting the signature does not have a negative impact upon a loaded update.

The procedure for determining this signature shown in Example 10-9.

Example 10-9. Assembly Code to Retrieve the Update Revision

```
MOV    ECX, 08BH          ;IA32_BIOS_SIGN_ID
XOR    EAX, EAX           ;clear EAX
XOR    EDX, EDX           ;clear EDX
WRMSR                     ;Load 0 to MSR at 8BH
MOV    EAX, 1
cpuid
MOV    ECX, 08BH           ;IA32_BIOS_SIGN_ID
rdmsr                      ;Read Model Specific Register
```

If there is an update active in the processor, its revision is returned in the EDX register after the RDMSR instruction executes.

IA32_BIOS_SIGN_ID	Microcode Update Signature Register
MSR Address:	08BH Accessed as a Qword
Default Value:	XXXX XXXX XXXX XXXXh
Access:	Read/Write

The IA32_BIOS_SIGN_ID register is used to report the microcode update signature when CPUID executes. The signature is returned in the upper DWORD (Table 10-12).

Table 10-12. Microcode Update Signature

Bit	Description
63:32	Microcode update signature. This field contains the signature of the currently loaded microcode update when read following the execution of the CPUID instruction, function 1. It is required that this register field be pre-loaded with zero prior to executing the CPUID, function 1. If the field remains equal to zero, then there is no microcode update loaded. Another non-zero value will be the signature.
31:0	Reserved.

10.11.7.2 Authenticating the Update

An update may be authenticated by the BIOS using the signature primitive, described above, and the algorithm in Example 10-10.

Example 10-10. Pseudo Code to Authenticate the Update

```
Z ← Obtain Update Revision from the Update Header to be authenticated;
X ← Obtain Current Update Signature from MSR 8BH;

If (Z > X)
{
    Load Update that is to be authenticated;
    Y ← Obtain New Signature from MSR 8BH;

    If (Z = Y)
        Success
    Else
        Fail
}
Else
    Fail
```

Example 10-10 requires that the BIOS only authenticate updates that contain a numerically larger revision than the currently loaded revision, where Current Signature (X) < New Update Revision (Z). A processor with no loaded update is considered to have a revision equal to zero.

This authentication procedure relies upon the decoding provided by the processor to verify an update from a potentially hostile source. As an example, this mechanism in conjunction with other safeguards provides security for dynamically incorporating field updates into the BIOS.

10.11.8 Optional Processor Microcode Update Specifications

This section an interface that an OEM-BIOS may provide to its client system software to manage processor microcode updates. System software may choose to build its own facility to manage microcode updates (e.g., similar to the facility described in Section 9.11.6) or rely on a facility provided by the BIOS to perform microcode updates.

Sections 10.11.8.1-10.11.8.9 describes an extension (Function 0D042H) to the real mode INT 15H service. INT 15H 0D042H function is one of several alternatives that a BIOS may choose to implement microcode update facility and offer to its client application (e.g., an OS). Other alternative microcode update facility that BIOS can choose are dependent on platform-specific capabilities, including the Capsule Update mechanism from the UEFI specification (www.uefi.org). In this discussion, the application is referred to as the calling program or caller.

The real mode INT15 call specification described here is an Intel extension to an OEM BIOS. This extension allows an application to read and modify the contents of the microcode update data in NVRAM. The update loader, which is part of the system BIOS, cannot be updated by the interface. All of the functions defined in the specification must be implemented for a system to be considered compliant with the specification. The INT15 functions are accessible only from real mode.

10.11.8.1 Responsibilities of the BIOS

If a BIOS passes the presence test (INT 15H, AX = 0D042H, BL = 0H), it must implement all of the sub-functions defined in the INT 15H, AX = 0D042H specification. There are no optional functions. BIOS must load the appropriate update for each processor during system initialization.

A Header Version of an update block containing the value 0FFFFFFFFH indicates that the update block is unused and available for storing a new update.

The BIOS is responsible for providing a region of non-volatile storage (NVRAM) for each potential processor stepping within a system. This storage unit consists of one or more update blocks. An update block is a contiguous 2048-byte block of memory. The BIOS for a single processor system need only provide update blocks to store one microcode update. If the BIOS for a multiple processor system is intended to support mixed processor steppings, then the BIOS needs to provide enough update blocks to store each unique microcode update or for each processor socket on the OEM's system board.

The BIOS is responsible for managing the NVRAM update blocks. This includes garbage collection, such as removing microcode updates that exist in NVRAM for which a corresponding processor does not exist in the system. This specification only provides the mechanism for ensuring security, the uniqueness of an entry, and that stale entries are not loaded. The actual update block management is implementation specific on a per-BIOS basis.

As an example, the BIOS may use update blocks sequentially in ascending order with CPU signatures sorted versus the first available block. In addition, garbage collection may be implemented as a setup option to clear all NVRAM slots or as BIOS code that searches and eliminates unused entries during boot.

NOTES

For IA-32 processors starting with family 0FH and model 03H and Intel 64 processors, the microcode update may be as large as 16 KBytes. Thus, BIOS must allocate 8 update blocks for each microcode update. In a MP system, a common microcode update may be sufficient for each socket in the system.

For IA-32 processors earlier than family 0FH and model 03H, the microcode update is 2 KBytes. An MP-capable BIOS that supports multiple steppings must allocate a block for each socket in the system.

A single-processor BIOS that supports variable-sized microcode update and fixed-sized microcode update must allocate one 16-KByte region and a second region of at least 2 KBytes.

The following algorithm (Example 10-11) describes the steps performed during BIOS initialization used to load the updates into the processor(s). The algorithm assumes:

- The BIOS ensures that no update contained within NVRAM has a header version or loader version that does not match one currently supported by the BIOS.
- The update contains a correct checksum.
- The BIOS ensures that (at most) one update exists for each processor stepping.
- Older update revisions are not allowed to overwrite more recent ones.

These requirements are checked by the BIOS during the execution of the write update function of this interface. The BIOS sequentially scans through all of the update blocks in NVRAM starting with index 0. The BIOS scans until it finds an update where the processor fields in the header match the processor signature (extended family, extended model, type, family, model, and stepping) as well as the platform bits of the current processor.

Example 10-11. Pseudo Code, Checks Required Prior to Loading an Update

```
For each processor in the system
{
    Determine the Processor Signature via CPUID function 1;
    Determine the Platform Bits ← 1 << IA32_PLATFORM_ID[52:50];

    For (I ← UpdateBlock 0, I < NumOfBlocks; I++)
    {
        If (Update.Header_Version = 00000001H)
        {
```

```
            If ((Update.ProcessorSignature = Processor Signature) &&
                 (Update.ProcessorFlags & Platform Bits))
            {
                Load Update.UpdateData into the Processor;
                Verify update was correctly loaded into the processor
                Go on to next processor
                    Break;
            }
            Else If (Update.TotalSize > (Update.DataSize + 48))
            {
                N ← 0
                While (N < Update.ExtendedSignatureCount)
                {
                    If ((Update.ProcessorSignature[N] =
                         Processor Signature) &&
                         (Update.ProcessorFlags[N] & Platform Bits))
                    {
                        Load Update.UpdateData into the Processor;
                        Verify update correctly loaded into the processor
                        Go on to next processor
                            Break;
                    }
                    N ← N + 1
                }
                I ← I + (Update.TotalSize / 2048)
                If ((Update.TotalSize MOD 2048) = 0)
                    I ← I + 1
            }
        }
    }
}
```

NOTES

The platform Id bits in IA32_PLATFORM_ID are encoded as a three-bit binary coded decimal field. The platform bits in the microcode update header are individually bit encoded. The algorithm must do a translation from one format to the other prior to doing a check.

When performing the INT 15H, 0D042H functions, the BIOS must assume that the caller has no knowledge of platform specific requirements. It is the responsibility of BIOS calls to manage all chipset and platform specific prerequisites for managing the NVRAM device. When writing the update data using the Write Update sub-function, the BIOS must maintain implementation specific data requirements (such as the update of NVRAM checksum). The BIOS should also attempt to verify the success of write operations on the storage device used to record the update.

10.11.8.2 Responsibilities of the Calling Program

This section of the document lists the responsibilities of a calling program using the interface specifications to load microcode update(s) into BIOS NVRAM.

- The calling program should call the INT 15H, 0D042H functions from a pure real mode program and should be executing on a system that is running in pure real mode.
- The caller should issue the presence test function (sub function 0) and verify the signature and return codes of that function.
- It is important that the calling program provides the required scratch RAM buffers for the BIOS and the proper stack size as specified in the interface definition.
- The calling program should read any update data that already exists in the BIOS in order to make decisions about the appropriateness of loading the update. The BIOS must refuse to overwrite a newer update with an

older version. The update header contains information about version and processor specifics for the calling program to make an intelligent decision about loading.

- There can be no ambiguous updates. The BIOS must refuse to allow multiple updates for the same CPU to exist at the same time; it also must refuse to load updates for processors that don't exist on the system.
- The calling application should implement a verify function that is run after the update write function successfully completes. This function reads back the update and verifies that the BIOS returned an image identical to the one that was written.

Example 10-12 represents a calling program.

Example 10-12. INT 15 DO42 Calling Program Pseudo-code

```
//
// We must be in real mode
//
If the system is not in Real mode exit
//
// Detect presence of Genuine Intel processor(s) that can be updated
// using(CPUID)
//
If no Intel processors exist that can be updated exit
//
// Detect the presence of the Intel microcode update extensions
//
If the BIOS fails the PresenceTestexit
//
// If the APIC is enabled, see if any other processors are out there
//
Read IA32_APICBASE
If APIC enabled
{
    Send Broadcast Message to all processors except self via APIC
    Have all processors execute CPUID, record the Processor Signature
    (i.e.,Extended Family, Extended Model, Type, Family, Model, Stepping)
    Have all processors read IA32_PLATFORM_ID[52:50], record Platform
     Id Bits

    If current processor cannot be updated
       exit
}
//
// Determine the number of unique update blocks needed for this system
//
NumBlocks = 0
For each processor
{
    If ((this is a unique processor stepping) AND
       (we have a unique update in the database for this processor))
    {
       Checksum the update from the database;
       If Checksum fails
          exit
       NumBlocks ← NumBlocks + size of microcode update / 2048
    }
}

//
// Do we have enough update slots for all CPUs?
//
```

```
If there are more blocks required to support the unique processor steppings than update blocks
provided by the BIOS exit
//
// Do we need any update blocks at all?  If not, we are done
//
If (NumBlocks = 0)
    exit
//
// Record updates for processors in NVRAM.
//
For (I=0; I<NumBlocks; I++)
{
    //
    // Load each Update
    //
    Issue the WriteUpdate function

    If (STORAGE_FULL) returned
    {
        Display Error -- BIOS is not managing NVRAM appropriately
        exit
    }

    If (INVALID_REVISION) returned
    {
        Display Message: More recent update already loaded in NVRAM for
         this stepping
        continue
    }

    If any other error returned
    {
        Display Diagnostic
        exit
    }

    //
    // Verify the update was loaded correctly
    //
    Issue the ReadUpdate function

    If an error occurred
    {
        Display Diagnostic
        exit
    }
    //
    // Compare the Update read to that written
    //
    If (Update read ≠ Update written)
    {
        Display Diagnostic
        exit
    }

    I ← I + (size of microcode update / 2048)
}
//
// Enable Update Loading, and inform user
```

```
//
Issue the Update Control function with Task = Enable.
```

10.11.8.3 Microcode Update Functions

Table 10-13 defines the processor microcode update functions that implementations of INT 15H 0D042H must support.

Table 10-13. Microcode Update Functions

Microcode Update Function	Function Number	Description	Required/Optional
Presence test	00H	Returns information about the supported functions.	Required
Write update data	01H	Writes one of the update data areas (slots).	Required
Update control	02H	Globally controls the loading of updates.	Required
Read update data	03H	Reads one of the update data areas (slots).	Required

10.11.8.4 INT 15H-based Interface

If an OEM-BIOS is implementing INT 15H 0D042H interface and offer to its client, the BIOS should allow additional microcode updates to be added to system flash.

The program that calls this interface is responsible for providing three 64-kilobyte RAM areas for BIOS use during calls to the read and write functions. These RAM scratch pads can be used by the BIOS for any purpose, but only for the duration of the function call. The calling routine places real mode segments pointing to the RAM blocks in the CX, DX, and SI registers. Calls to functions in this interface must be made with a minimum of 32 kilobytes of stack available to the BIOS.

In general, each function returns with CF cleared and AH contains the returned status. The general return codes and other constant definitions are listed in Section 10.11.8.9, "Return Codes."

The OEM error field (AL) is provided for the OEM to return additional error information specific to the platform. If the BIOS provides no additional information about the error, OEM error must be set to SUCCESS. The OEM error field is undefined if AH contains either SUCCESS (00H) or NOT_IMPLEMENTED (86H). In all other cases, it must be set with either SUCCESS or a value meaningful to the OEM.

The following sections describe functions provided by the INT15H-based interface.

10.11.8.5 Function 00H—Presence Test

This function verifies that the BIOS has implemented required microcode update functions. Table 10-14 lists the parameters and return codes for the function.

Table 10-14. Parameters for the Presence Test

Input		
AX	Function Code	0D042H
BL	Sub-function	00H - Presence test
Output		
CF	Carry Flag	Carry Set - Failure - AH contains status Carry Clear - All return values valid
AH	Return Code	
AL	OEM Error	Additional OEM information.
EBX	Signature Part 1	'INTE' - Part one of the signature
ECX	Signature Part 2	'LPEP'- Part two of the signature
EDX	Loader Version	Version number of the microcode update loader

Table 10-14. Parameters for the Presence Test (Contd.)

Input		
SI	Update Count	Number of 2048 update blocks in NVRAM the BIOS allocated to storing microcode updates
Return Codes (see Table 10-19 for code definitions		
SUCCESS		The function completed successfully.
NOT_IMPLEMENTED		The function is not implemented.

In order to assure that the BIOS function is present, the caller must verify the carry flag, the return code, and the 64-bit signature. The update count reflects the number of 2048-byte blocks available for storage within one non-volatile RAM.

The loader version number refers to the revision of the update loader program that is included in the system BIOS image.

10.11.8.6 Function 01H—Write Microcode Update Data

This function integrates a new microcode update into the BIOS storage device. Table 10-15 lists the parameters and return codes for the function.

Table 10-15. Parameters for the Write Update Data Function

Input		
AX	Function Code	0D042H
BL	Sub-function	01H - Write update
ES:DI	Update Address	Real Mode pointer to the Intel Update structure. This buffer is 2048 bytes in length if the processor supports only fixed-size microcode update or... Real Mode pointer to the Intel Update structure. This buffer is 64 KBytes in length if the processor supports a variable-size microcode update.
CX	Scratch Pad1	Real mode segment address of 64 KBytes of RAM block
DX	Scratch Pad2	Real mode segment address of 64 KBytes of RAM block
SI	Scratch Pad3	Real mode segment address of 64 KBytes of RAM block
SS:SP	Stack pointer	32 KBytes of stack minimum
Output		
CF	Carry Flag	Carry Set - Failure - AH Contains status Carry Clear - All return values valid
AH	Return Code	Status of the call
AL	OEM Error	Additional OEM information
Return Codes (see Table 10-19 for code definitions		
SUCCESS		The function completed successfully.
NOT_IMPLEMENTED		The function is not implemented.
WRITE_FAILURE		A failure occurred because of the inability to write the storage device.
ERASE_FAILURE		A failure occurred because of the inability to erase the storage device.
READ_FAILURE		A failure occurred because of the inability to read the storage device.

Table 10-15. Parameters for the Write Update Data Function (Contd.)

Input	
STORAGE_FULL	The BIOS non-volatile storage area is unable to accommodate the update because all available update blocks are filled with updates that are needed for processors in the system.
CPU_NOT_PRESENT	The processor stepping does not currently exist in the system.
INVALID_HEADER	The update header contains a header or loader version that is not recognized by the BIOS.
INVALID_HEADER_CS	The update does not checksum correctly.
SECURITY_FAILURE	The processor rejected the update.
INVALID_REVISION	The same or more recent revision of the update exists in the storage device.

Description

The BIOS is responsible for selecting an appropriate update block in the non-volatile storage for storing the new update. This BIOS is also responsible for ensuring the integrity of the information provided by the caller, including authenticating the proposed update before incorporating it into storage.

Before writing the update block into NVRAM, the BIOS should ensure that the update structure meets the following criteria in the following order:

1. The update header version should be equal to an update header version recognized by the BIOS.
2. The update loader version in the update header should be equal to the update loader version contained within the BIOS image.
3. The update block must checksum. This checksum is computed as a 32-bit summation of all double words in the structure, including the header, data, and processor signature table.

The BIOS selects update block(s) in non-volatile storage for storing the candidate update. The BIOS can select any available update block as long as it guarantees that only a single update exists for any given processor stepping in non-volatile storage. If the update block selected already contains an update, the following additional criteria apply to overwrite it:

- The processor signature in the proposed update must be equal to the processor signature in the header of the current update in NVRAM (Processor Signature + platform ID bits).
- The update revision in the proposed update should be greater than the update revision in the header of the current update in NVRAM.

If no unused update blocks are available and the above criteria are not met, the BIOS can overwrite update block(s) for a processor stepping that is no longer present in the system. This can be done by scanning the update blocks and comparing the processor steppings, identified in the MP Specification table, to the processor steppings that currently exist in the system.

Finally, before storing the proposed update in NVRAM, the BIOS must verify the authenticity of the update via the mechanism described in Section 10.11.6, "Microcode Update Loader." This includes loading the update into the current processor, executing the CPUID instruction, reading MSR 08Bh, and comparing a calculated value with the update revision in the proposed update header for equality.

When performing the write update function, the BIOS must record the entire update, including the header, the update data, and the extended processor signature table (if applicable). When writing an update, the original contents may be overwritten, assuming the above criteria have been met. It is the responsibility of the BIOS to ensure that more recent updates are not overwritten through the use of this BIOS call, and that only a single update exists within the NVRAM for any processor stepping and platform ID.

Figure 10-8 and Figure 10-9 show the process the BIOS follows to choose an update block and ensure the integrity of the data when it stores the new microcode update.

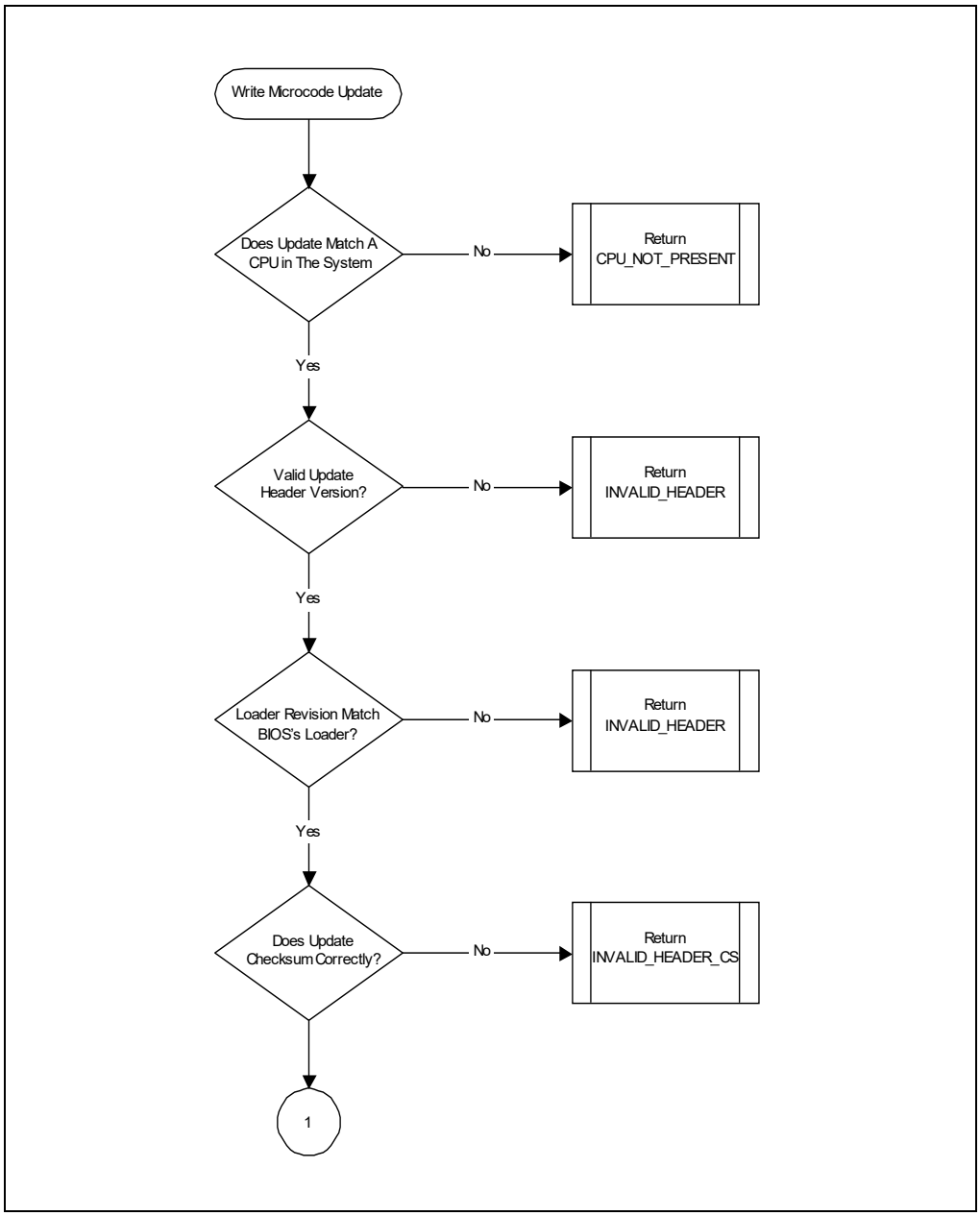

Figure 10-8. Microcode Update Write Operation Flow [1]

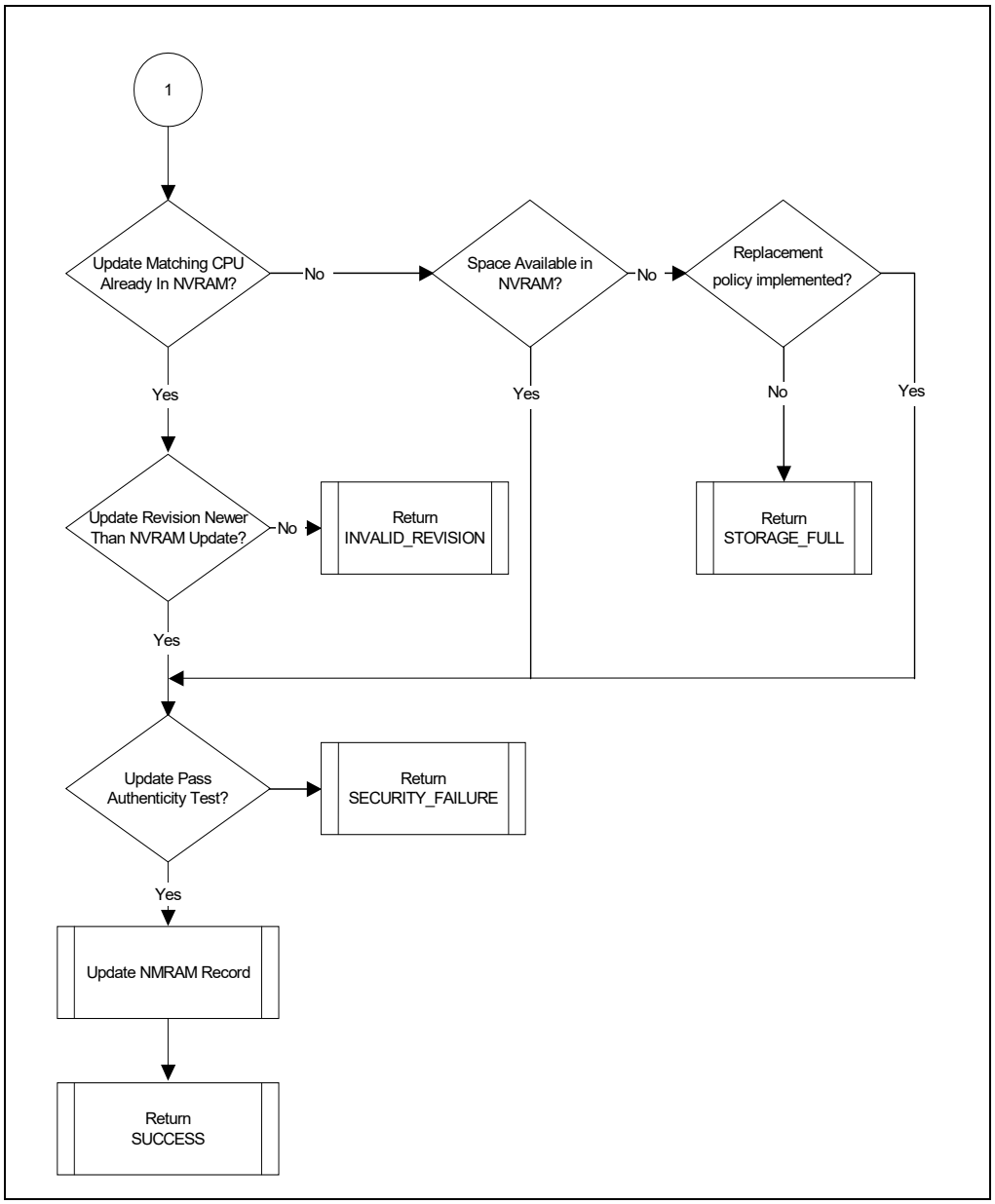

Figure 10-9. Microcode Update Write Operation Flow [2]

10.11.8.7 Function 02H—Microcode Update Control

This function enables loading of binary updates into the processor. Table 10-16 lists the parameters and return codes for the function.

Table 10-16. Parameters for the Control Update Sub-function

Input		
AX	Function Code	0D042H
BL	Sub-function	02H - Control update
BH	Task	See the description below.
CX	Scratch Pad1	Real mode segment of 64 KBytes of RAM block
DX	Scratch Pad2	Real mode segment of 64 KBytes of RAM block
SI	Scratch Pad3	Real mode segment of 64 KBytes of RAM block
SS:SP	Stack pointer	32 kilobytes of stack minimum
Output		
CF	Carry Flag	Carry Set - Failure - AH contains status Carry Clear - All return values valid.
AH	Return Code	Status of the call
AL	OEM Error	Additional OEM Information.
BL	Update Status	Either enable or disable indicator
Return Codes (see Table 10-19 for code definitions)		
SUCCESS		Function completed successfully.
READ_FAILURE		A failure occurred because of the inability to read the storage device.

This control is provided on a global basis for all updates and processors. The caller can determine the current status of update loading (enabled or disabled) without changing the state. The function does not allow the caller to disable loading of binary updates, as this poses a security risk.

The caller specifies the requested operation by placing one of the values from Table 10-17 in the BH register. After successfully completing this function, the BL register contains either the enable or the disable designator. Note that if the function fails, the update status return value is undefined.

Table 10-17. Mnemonic Values

Mnemonic	**Value**	**Meaning**
Enable	1	Enable the Update loading at initialization time.
Query	2	Determine the current state of the update control without changing its status.

The READ_FAILURE error code returned by this function has meaning only if the control function is implemented in the BIOS NVRAM. The state of this feature (enabled/disabled) can also be implemented using CMOS RAM bits where READ failure errors cannot occur.

10.11.8.8 Function 03H—Read Microcode Update Data

This function reads a currently installed microcode update from the BIOS storage into a caller-provided RAM buffer. Table 10-18 lists the parameters and return codes.

Table 10-18. Parameters for the Read Microcode Update Data Function

Input		
AX	Function Code	0D042H
BL	Sub-function	03H - Read Update
ES:DI	Buffer Address	Real Mode pointer to the Intel Update structure that will be written with the binary data

Table 10-18. Parameters for the Read Microcode Update Data Function (Contd.)

ECX	Scratch Pad1	Real Mode Segment address of 64 KBytes of RAM Block (lower 16 bits)
ECX	Scratch Pad2	Real Mode Segment address of 64 KBytes of RAM Block (upper 16 bits)
DX	Scratch Pad3	Real Mode Segment address of 64 KBytes of RAM Block
SS:SP	Stack pointer	32 KBytes of Stack Minimum
SI	Update Number	This is the index number of the update block to be read. This value is zero based and must be less than the update count returned from the presence test function.
Output		
CF	Carry Flag	Carry Set - Failure - AH contains Status
Carry Clear - All return values are valid.		
AH	Return Code	Status of the Call
AL	OEM Error	Additional OEM Information
Return Codes (see Table 10-19 for code definitions)		
SUCCESS		The function completed successfully.
READ_FAILURE		There was a failure because of the inability to read the storage device.
UPDATE_NUM_INVALID		Update number exceeds the maximum number of update blocks implemented by the BIOS.
NOT_EMPTY		The specified update block is a subsequent block in use to store a valid microcode update that spans multiple blocks. The specified block is not a header block and is not empty.

The read function enables the caller to read any microcode update data that already exists in a BIOS and make decisions about the addition of new updates. As a result of a successful call, the BIOS copies the microcode update into the location pointed to by ES:DI, with the contents of all Update block(s) that are used to store the specified microcode update.

If the specified block is not a header block, but does contain valid data from a microcode update that spans multiple update blocks, then the BIOS must return Failure with the NOT_EMPTY error code in AH.

An update block is considered unused and available for storing a new update if its Header Version contains the value 0FFFFFFFFH after return from this function call. The actual implementation of NVRAM storage management is not specified here and is BIOS dependent. As an example, the actual data value used to represent an empty block by the BIOS may be zero, rather than 0FFFFFFFFH. The BIOS is responsible for translating this information into the header provided by this function.

10.11.8.9 Return Codes

After the call has been made, the return codes listed in Table 10-19 are available in the AH register.

Table 10-19. Return Code Definitions

Return Code	Value	Description
SUCCESS	00H	The function completed successfully.
NOT_IMPLEMENTED	86H	The function is not implemented.
ERASE_FAILURE	90H	A failure because of the inability to erase the storage device.
WRITE_FAILURE	91H	A failure because of the inability to write the storage device.
READ_FAILURE	92H	A failure because of the inability to read the storage device.
STORAGE_FULL	93H	The BIOS non-volatile storage area is unable to accommodate the update because all available update blocks are filled with updates that are needed for processors in the system.
CPU_NOT_PRESENT	94H	The processor stepping does not currently exist in the system.
INVALID_HEADER	95H	The update header contains a header or loader version that is not recognized by the BIOS.
INVALID_HEADER_CS	96H	The update does not checksum correctly.
SECURITY_FAILURE	97H	The update was rejected by the processor.
INVALID_REVISION	98H	The same or more recent revision of the update exists in the storage device.
UPDATE_NUM_INVALID	99H	The update number exceeds the maximum number of update blocks implemented by the BIOS.
NOT_EMPTY	9AH	The specified update block is a subsequent block in use to store a valid microcode update that spans multiple blocks. The specified block is not a header block and is not empty.

CHAPTER 11
ADVANCED PROGRAMMABLE INTERRUPT CONTROLLER (APIC)

The Advanced Programmable Interrupt Controller (APIC), referred to in the following sections as the local APIC, was introduced into the IA-32 processors with the Pentium processor (see Section 23.27, "Advanced Programmable Interrupt Controller (APIC)") and is included in the P6 family, Pentium 4, Intel Xeon processors, and other more recent Intel 64 and IA-32 processor families (see Section 11.4.2, "Presence of the Local APIC"). The local APIC performs two primary functions for the processor:

- It receives interrupts from the processor's interrupt pins, from internal sources and from an external I/O APIC (or other external interrupt controller). It sends these to the processor core for handling.
- In multiple processor (MP) systems, it sends and receives interprocessor interrupt (IPI) messages to and from other logical processors on the system bus. IPI messages can be used to distribute interrupts among the processors in the system or to execute system wide functions (such as, booting up processors or distributing work among a group of processors).

The external **I/O APIC** is part of Intel's system chipset. Its primary function is to receive external interrupt events from the system and its associated I/O devices and relay them to the local APIC as interrupt messages. In MP systems, the I/O APIC also provides a mechanism for distributing external interrupts to the local APICs of selected processors or groups of processors on the system bus.

This chapter provides a description of the local APIC and its programming interface. It also provides an overview of the interface between the local APIC and the I/O APIC. Contact Intel for detailed information about the I/O APIC.

When a local APIC has sent an interrupt to its processor core for handling, the processor uses the interrupt and exception handling mechanism described in Chapter 6, "Interrupt and Exception Handling." See Section 6.1, "Interrupt and Exception Overview," for an introduction to interrupt and exception handling.

11.1 LOCAL AND I/O APIC OVERVIEW

Each local APIC consists of a set of APIC registers (see Table 11-1) and associated hardware that control the delivery of interrupts to the processor core and the generation of IPI messages. The APIC registers are memory mapped and can be read and written to using the MOV instruction.

Local APICs can receive interrupts from the following sources:

- **Locally connected I/O devices** — These interrupts originate as an edge or level asserted by an I/O device that is connected directly to the processor's local interrupt pins (LINT0 and LINT1). The I/O devices may also be connected to an 8259-type interrupt controller that is in turn connected to the processor through one of the local interrupt pins.
- **Externally connected I/O devices** — These interrupts originate as an edge or level asserted by an I/O device that is connected to the interrupt input pins of an I/O APIC. Interrupts are sent as I/O interrupt messages from the I/O APIC to one or more of the processors in the system.
- **Inter-processor interrupts (IPIs)** — An Intel 64 or IA-32 processor can use the IPI mechanism to interrupt another processor or group of processors on the system bus. IPIs are used for software self-interrupts, interrupt forwarding, or preemptive scheduling.
- **APIC timer generated interrupts** — The local APIC timer can be programmed to send a local interrupt to its associated processor when a programmed count is reached (see Section 11.5.4, "APIC Timer").
- **Performance monitoring counter interrupts** — P6 family, Pentium 4, and Intel Xeon processors provide the ability to send an interrupt to its associated processor when a performance-monitoring counter overflows (see Section 20.6.3.5.8, "Generating an Interrupt on Overflow").
- **Thermal Sensor interrupts** — Pentium 4 and Intel Xeon processors provide the ability to send an interrupt to themselves when the internal thermal sensor has been tripped (see Section 15.8.2, "Thermal Monitor").

- **APIC internal error interrupts** — When an error condition is recognized within the local APIC (such as an attempt to access an unimplemented register), the APIC can be programmed to send an interrupt to its associated processor (see Section 11.5.3, "Error Handling").

Of these interrupt sources: the processor's LINT0 and LINT1 pins, the APIC timer, the performance-monitoring counters, the thermal sensor, and the internal APIC error detector are referred to as **local interrupt sources**. Upon receiving a signal from a local interrupt source, the local APIC delivers the interrupt to the processor core using an interrupt delivery protocol that has been set up through a group of APIC registers called the **local vector table** or **LVT** (see Section 11.5.1, "Local Vector Table"). A separate entry is provided in the local vector table for each local interrupt source, which allows a specific interrupt delivery protocol to be set up for each source. For example, if the LINT1 pin is going to be used as an NMI pin, the LINT1 entry in the local vector table can be set up to deliver an interrupt with vector number 2 (NMI interrupt) to the processor core.

The local APIC handles interrupts from the other two interrupt sources (externally connected I/O devices and IPIs) through its IPI message handling facilities.

A processor can generate IPIs by programming the interrupt command register (ICR) in its local APIC (see Section 11.6.1, "Interrupt Command Register (ICR)"). The act of writing to the ICR causes an IPI message to be generated and issued on the system bus (for Pentium 4 and Intel Xeon processors) or on the APIC bus (for Pentium and P6 family processors). See Section 11.2, "System Bus Vs. APIC Bus."

IPIs can be sent to other processors in the system or to the originating processor (self-interrupts). When the target processor receives an IPI message, its local APIC handles the message automatically (using information included in the message such as vector number and trigger mode). See Section 11.6, "Issuing Interprocessor Interrupts," for a detailed explanation of the local APIC's IPI message delivery and acceptance mechanism.

The local APIC can also receive interrupts from externally connected devices through the I/O APIC (see Figure 11-1). The I/O APIC is responsible for receiving interrupts generated by system hardware and I/O devices and forwarding them to the local APIC as interrupt messages.

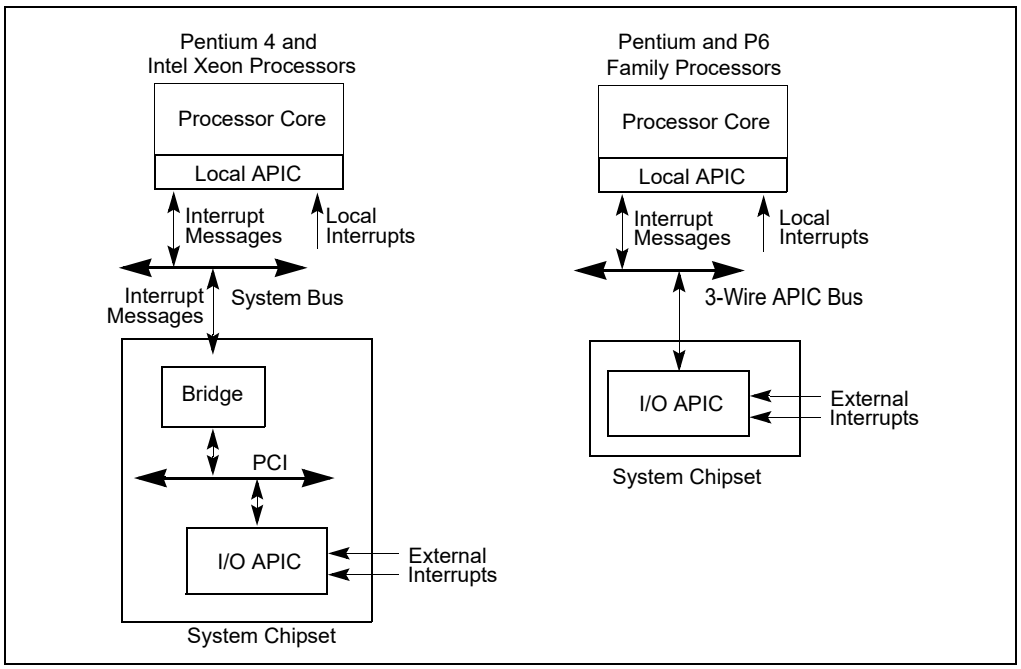

Figure 11-1. Relationship of Local APIC and I/O APIC In Single-Processor Systems

Individual pins on the I/O APIC can be programmed to generate a specific interrupt vector when asserted. The I/O APIC also has a "virtual wire mode" that allows it to communicate with a standard 8259A-style external interrupt controller. Note that the local APIC can be disabled (see Section 11.4.3, "Enabling or Disabling the Local APIC"). This allows an associated processor core to receive interrupts directly from an 8259A interrupt controller.

Both the local APIC and the I/O APIC are designed to operate in MP systems (see Figures 11-2 and 11-3). Each local APIC handles interrupts from the I/O APIC, IPIs from processors on the system bus, and self-generated interrupts. Interrupts can also be delivered to the individual processors through the local interrupt pins; however, this mechanism is commonly not used in MP systems.

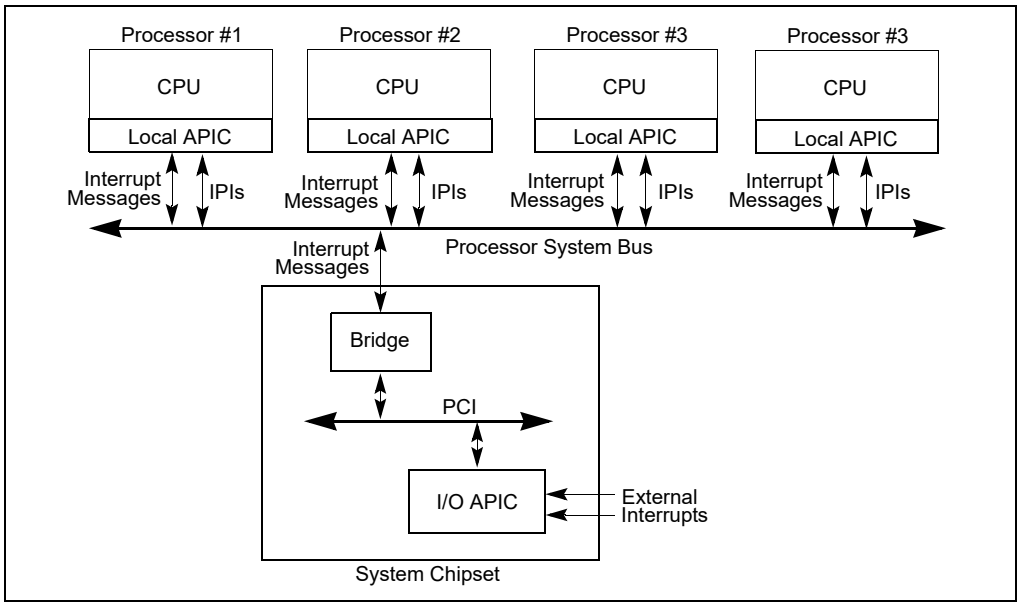

Figure 11-2. Local APICs and I/O APIC When Intel Xeon Processors Are Used in Multiple-Processor Systems

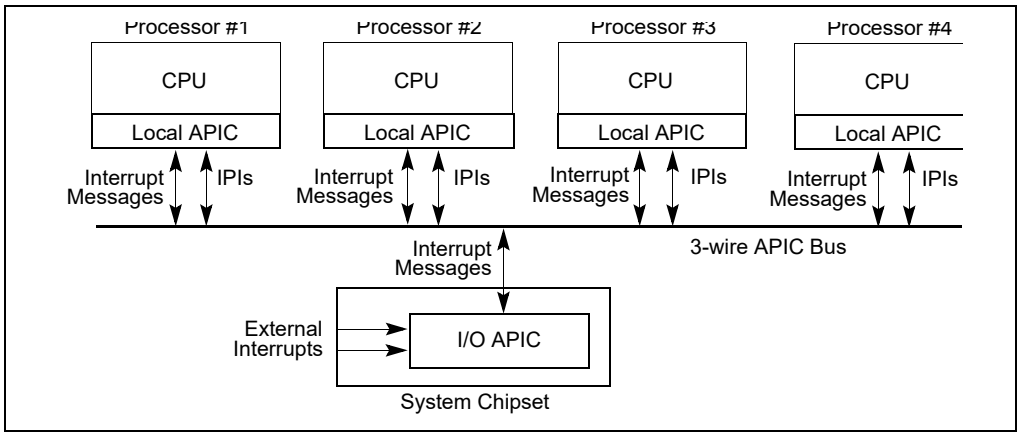

Figure 11-3. Local APICs and I/O APIC When P6 Family Processors Are Used in Multiple-Processor Systems

The IPI mechanism is typically used in MP systems to send fixed interrupts (interrupts for a specific vector number) and special-purpose interrupts to processors on the system bus. For example, a local APIC can use an IPI to forward a fixed interrupt to another processor for servicing. Special-purpose IPIs (including NMI, INIT, SMI, and SIPI IPIs) allow one or more processors on the system bus to perform system-wide boot-up and control functions.

The following sections focus on the local APIC and its implementation in the Pentium 4, Intel Xeon, and P6 family processors. In these sections, the terms "local APIC" and "I/O APIC" refer to local and I/O APICs used with the P6 family processors and to local and I/O xAPICs used with the Pentium 4 and Intel Xeon processors (see Section 11.3, "The Intel® 82489DX External APIC, the APIC, the xAPIC, and the X2APIC").

11.2 SYSTEM BUS VS. APIC BUS

For the P6 family and Pentium processors, the I/O APIC and local APICs communicate through the 3-wire inter-APIC bus (see Figure 11-3). Local APICs also use the APIC bus to send and receive IPIs. The APIC bus and its messages are invisible to software and are not classed as architectural.

Beginning with the Pentium 4 and Intel Xeon processors, the I/O APIC and local APICs (using the xAPIC architecture) communicate through the system bus (see Figure 11-2). The I/O APIC sends interrupt requests to the processors on the system bus through bridge hardware that is part of the Intel chipset. The bridge hardware generates the interrupt messages that go to the local APICs. IPIs between local APICs are transmitted directly on the system bus.

11.3 THE INTEL® 82489DX EXTERNAL APIC, THE APIC, THE XAPIC, AND THE X2APIC

The local APIC in the P6 family and Pentium processors is an architectural subset of the Intel® 82489DX external APIC. See Section 23.27.1, "Software Visible Differences Between the Local APIC and the 82489DX."

The APIC architecture used in the Pentium 4 and Intel Xeon processors (called the xAPIC architecture) is an extension of the APIC architecture found in the P6 family processors. The primary difference between the APIC and xAPIC architectures is that with the xAPIC architecture, the local APICs and the I/O APIC communicate through the system bus. With the APIC architecture, they communication through the APIC bus (see Section 11.2, "System Bus Vs. APIC Bus"). Also, some APIC architectural features have been extended and/or modified in the xAPIC architecture. These extensions and modifications are described in Section 11.4 through Section 11.10.

The basic operating mode of the xAPIC is **xAPIC mode**. The x2APIC architecture is an extension of the xAPIC architecture, primarily to increase processor addressability. The x2APIC architecture provides backward compatibility to the xAPIC architecture and forward extendability for future Intel platform innovations. These extensions and modifications are supported by a new mode of execution (**x2APIC mode**) are detailed in Section 11.12.

11.4 LOCAL APIC

The following sections describe the architecture of the local APIC and how to detect it, identify it, and determine its status. Descriptions of how to program the local APIC are given in Section 11.5.1, "Local Vector Table," and Section 11.6.1, "Interrupt Command Register (ICR)."

11.4.1 The Local APIC Block Diagram

Figure 11-4 gives a functional block diagram for the local APIC. Software interacts with the local APIC by reading and writing its registers. APIC registers are memory-mapped to a 4-KByte region of the processor's physical address space with an initial starting address of FEE00000H. For correct APIC operation, this address space must be mapped to an area of memory that has been designated as strong uncacheable (UC). See Section 12.3, "Methods of Caching Available."

In MP system configurations, the APIC registers for Intel 64 or IA-32 processors on the system bus are initially mapped to the same 4-KByte region of the physical address space. Software has the option of changing initial mapping to a different 4-KByte region for all the local APICs or of mapping the APIC registers for each local APIC to its own 4-KByte region. Section 11.4.5, "Relocating the Local APIC Registers," describes how to relocate the base address for APIC registers.

On processors supporting x2APIC architecture (indicated by CPUID.01H:ECX[21] = 1), the local APIC supports operation both in xAPIC mode and (if enabled by software) in x2APIC mode. x2APIC mode provides extended processor addressability (see Section 11.12).

NOTE

For P6 family, Pentium 4, and Intel Xeon processors, the APIC handles all memory accesses to addresses within the 4-KByte APIC register space internally and no external bus cycles are produced. For the Pentium processors with an on-chip APIC, bus cycles are produced for accesses to the APIC register space. Thus, for software intended to run on Pentium processors, system software should explicitly not map the APIC register space to regular system memory. Doing so can result in an invalid opcode exception (#UD) being generated or unpredictable execution.

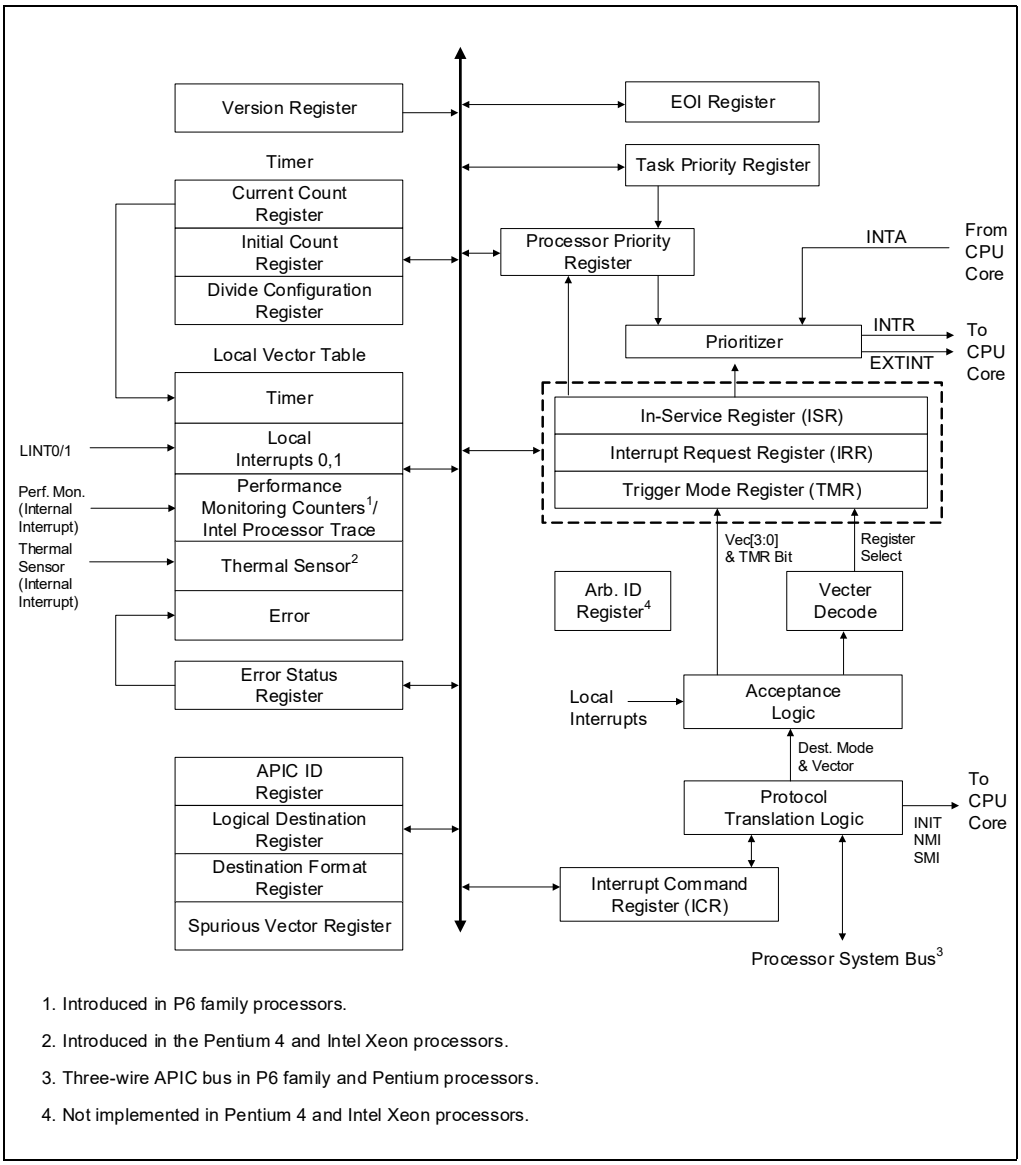

Figure 11-4. Local APIC Structure

Table 11-1 shows how the APIC registers are mapped into the 4-KByte APIC register space. Registers are 32 bits, 64 bits, or 256 bits in width; all are aligned on 128-bit boundaries. All 32-bit registers should be accessed using 128-bit aligned 32-bit loads or stores. Some processors may support loads and stores of less than 32 bits to some of the APIC registers. This is model specific behavior and is not guaranteed to work on all processors. Any FP/MMX/SSE access to an APIC register, or any access that touches bytes 4 through 15 of an APIC register may cause undefined behavior and must not be executed. This undefined behavior could include hangs, incorrect results or unexpected exceptions, including machine checks, and may vary between implementations. Wider registers (64-bit or 256-bit) must be accessed using multiple 32-bit loads or stores, with all accesses being 128-bit aligned.

The local APIC registers listed in Table 11-1 are not MSRs. The only MSR associated with the programming of the local APIC is the IA32_APIC_BASE MSR (see Section 11.4.3, "Enabling or Disabling the Local APIC").

NOTE

In processors based on Nehalem[1] microarchitecture, the Local APIC ID Register is no longer Read/Write; it is Read Only.

Table 11-1. Local APIC Register Address Map

Address	Register Name	Software Read/Write
FEE0 0000H	Reserved	
FEE0 0010H	Reserved	
FEE0 0020H	Local APIC ID Register	Read/Write.
FEE0 0030H	Local APIC Version Register	Read Only.
FEE0 0040H	Reserved	
FEE0 0050H	Reserved	
FEE0 0060H	Reserved	
FEE0 0070H	Reserved	
FEE0 0080H	Task Priority Register (TPR)	Read/Write.
FEE0 0090H	Arbitration Priority Register[1] (APR)	Read Only.
FEE0 00A0H	Processor Priority Register (PPR)	Read Only.
FEE0 00B0H	EOI Register	Write Only.
FEE0 00C0H	Remote Read Register[1] (RRD)	Read Only
FEE0 00D0H	Logical Destination Register	Read/Write.
FEE0 00E0H	Destination Format Register	Read/Write (see Section 11.6.2.2).
FEE0 00F0H	Spurious Interrupt Vector Register	Read/Write (see Section 11.9.
FEE0 0100H	In-Service Register (ISR); bits 31:0	Read Only.
FEE0 0110H	In-Service Register (ISR); bits 63:32	Read Only.
FEE0 0120H	In-Service Register (ISR); bits 95:64	Read Only.
FEE0 0130H	In-Service Register (ISR); bits 127:96	Read Only.
FEE0 0140H	In-Service Register (ISR); bits 159:128	Read Only.
FEE0 0150H	In-Service Register (ISR); bits 191:160	Read Only.
FEE0 0160H	In-Service Register (ISR); bits 223:192	Read Only.
FEE0 0170H	In-Service Register (ISR); bits 255:224	Read Only.
FEE0 0180H	Trigger Mode Register (TMR); bits 31:0	Read Only.
FEE0 0190H	Trigger Mode Register (TMR); bits 63:32	Read Only.
FEE0 01A0H	Trigger Mode Register (TMR); bits 95:64	Read Only.
FEE0 01B0H	Trigger Mode Register (TMR); bits 127:96	Read Only.
FEE0 01C0H	Trigger Mode Register (TMR); bits 159:128	Read Only.
FEE0 01D0H	Trigger Mode Register (TMR); bits 191:160	Read Only.

1. See Table 2-1, "CPUID Signature Values of DisplayFamily_DisplayModel," on page 1, and Section 2.8, "MSRs In the Nehalem Microarchitecture" of the *Intel® 64 and IA-32 Architectures Software Developer's Manual, Volume 4* to determine which processors are based on Nehalem microarchitecture.

Table 11-1. Local APIC Register Address Map (Contd.)

Address	Register Name	Software Read/Write
FEE0 01E0H	Trigger Mode Register (TMR); bits 223:192	Read Only.
FEE0 01F0H	Trigger Mode Register (TMR); bits 255:224	Read Only.
FEE0 0200H	Interrupt Request Register (IRR); bits 31:0	Read Only.
FEE0 0210H	Interrupt Request Register (IRR); bits 63:32	Read Only.
FEE0 0220H	Interrupt Request Register (IRR); bits 95:64	Read Only.
FEE0 0230H	Interrupt Request Register (IRR); bits 127:96	Read Only.
FEE0 0240H	Interrupt Request Register (IRR); bits 159:128	Read Only.
FEE0 0250H	Interrupt Request Register (IRR); bits 191:160	Read Only.
FEE0 0260H	Interrupt Request Register (IRR); bits 223:192	Read Only.
FEE0 0270H	Interrupt Request Register (IRR); bits 255:224	Read Only.
FEE0 0280H	Error Status Register	Write/Read; see Section 11.5.3.
FEE0 0290H through FEE0 02E0H	Reserved	
FEE0 02F0H	LVT Corrected Machine Check Interrupt (CMCI) Register	Read/Write.
FEE0 0300H	Interrupt Command Register (ICR); bits 0-31	Read/Write.
FEE0 0310H	Interrupt Command Register (ICR); bits 32-63	Read/Write.
FEE0 0320H	LVT Timer Register	Read/Write.
FEE0 0330H	LVT Thermal Sensor Register[2]	Read/Write.
FEE0 0340H	LVT Performance Monitoring Counters Register[3]	Read/Write.
FEE0 0350H	LVT LINT0 Register	Read/Write.
FEE0 0360H	LVT LINT1 Register	Read/Write.
FEE0 0370H	LVT Error Register	Read/Write.
FEE0 0380H	Initial Count Register (for Timer)	Read/Write.
FEE0 0390H	Current Count Register (for Timer)	Read Only.
FEE0 03A0H through FEE0 03D0H	Reserved	
FEE0 03E0H	Divide Configuration Register (for Timer)	Read/Write.
FEE0 03F0H	Reserved	

NOTES:

1. Not supported in the Pentium 4 and Intel Xeon processors. The Illegal Register Access bit (7) of the ESR will not be set when writing to these registers.
2. Introduced in the Pentium 4 and Intel Xeon processors. This APIC register and its associated function are implementation dependent and may not be present in future IA-32 or Intel 64 processors.
3. Introduced in the Pentium Pro processor. This APIC register and its associated function are implementation dependent and may not be present in future IA-32 or Intel 64 processors.

11.4.2 Presence of the Local APIC

Beginning with the P6 family processors, the presence or absence of an on-chip local APIC can be detected using the CPUID instruction. When the CPUID instruction is executed with a source operand of 1 in the EAX register, bit 9 of the CPUID feature flags returned in the EDX register indicates the presence (set) or absence (clear) of a local APIC.

11.4.3 Enabling or Disabling the Local APIC

The local APIC can be enabled or disabled in either of two ways:

1. Using the APIC global enable/disable flag in the IA32_APIC_BASE MSR (MSR address 1BH; see Figure 11-5):
   - When IA32_APIC_BASE[11] is 0, the processor is functionally equivalent to an IA-32 processor without an on-chip APIC. The CPUID feature flag for the APIC (see Section 11.4.2, "Presence of the Local APIC") is also set to 0.
   - When IA32_APIC_BASE[11] is set to 0, processor APICs based on the 3-wire APIC bus cannot be generally re-enabled until a system hardware reset. The 3-wire bus loses track of arbitration that would be necessary for complete re-enabling. Certain APIC functionality can be enabled (for example: performance and thermal monitoring interrupt generation).
   - For processors that use Front Side Bus (FSB) delivery of interrupts, software may disable or enable the APIC by setting and resetting IA32_APIC_BASE[11]. A hardware reset is not required to re-start APIC functionality, if software guarantees no interrupt will be sent to the APIC as IA32_APIC_BASE[11] is cleared.
   - When IA32_APIC_BASE[11] is set to 0, prior initialization to the APIC may be lost and the APIC may return to the state described in Section 11.4.7.1, "Local APIC State After Power-Up or Reset."
2. Using the APIC software enable/disable flag in the spurious-interrupt vector register (see Figure 11-23):
   - If IA32_APIC_BASE[11] is 1, software can temporarily disable a local APIC at any time by clearing the APIC software enable/disable flag in the spurious-interrupt vector register (see Figure 11-23). The state of the local APIC when in this software-disabled state is described in Section 11.4.7.2, "Local APIC State After It Has Been Software Disabled."
   - When the local APIC is in the software-disabled state, it can be re-enabled at any time by setting the APIC software enable/disable flag to 1.

For the Pentium processor, the APICEN pin (which is shared with the PICD1 pin) is used during power-up or reset to disable the local APIC.

Note that each entry in the LVT has a mask bit that can be used to inhibit interrupts from being delivered to the processor from selected local interrupt sources (the LINT0 and LINT1 pins, the APIC timer, the performance-monitoring counters, Intel® Processor Trace, the thermal sensor, and/or the internal APIC error detector).

11.4.4 Local APIC Status and Location

The status and location of the local APIC are contained in the IA32_APIC_BASE MSR (see Figure 11-5). MSR bit functions are described below:

- **BSP flag, bit 8** — Indicates if the processor is the bootstrap processor (BSP). See Section 9.4, "Multiple-Processor (MP) Initialization." Following a power-up or reset, this flag is set to 1 for the processor selected as the BSP and set to 0 for the remaining processors (APs).
- **APIC Global Enable flag, bit 11** — Enables or disables the local APIC (see Section 11.4.3, "Enabling or Disabling the Local APIC"). This flag is available in the Pentium 4, Intel Xeon, and P6 family processors. It is not guaranteed to be available or available at the same location in future Intel 64 or IA-32 processors.
- **APIC Base field, bits 12 through 35** — Specifies the base address of the APIC registers. This 24-bit value is extended by 12 bits at the low end to form the base address. This automatically aligns the address on a 4-KByte boundary. Following a power-up or reset, the field is set to FEE0 0000H.
- Bits 0 through 7, bits 9 and 10, and bits MAXPHYADDR[1] through 63 in the IA32_APIC_BASE MSR are reserved.

1. The MAXPHYADDR is 36 bits for processors that do not support CPUID leaf 80000008H, or indicated by CPUID.80000008H:EAX[bits 7:0] for processors that support CPUID leaf 80000008H.

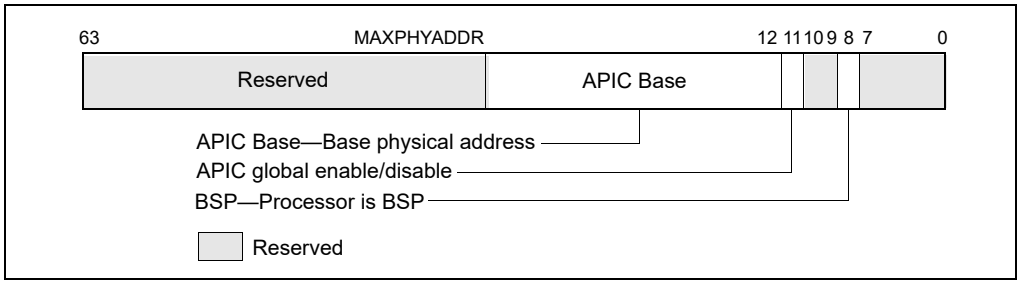

Figure 11-5. IA32_APIC_BASE MSR (APIC_BASE_MSR in P6 Family)

11.4.5 Relocating the Local APIC Registers

The Pentium 4, Intel Xeon, and P6 family processors permit the starting address of the APIC registers to be relocated from FEE00000H to another physical address by modifying the value in the base address field of the IA32_APIC_BASE MSR. This extension of the APIC architecture is provided to help resolve conflicts with memory maps of existing systems and to allow individual processors in an MP system to map their APIC registers to different locations in physical memory.

11.4.6 Local APIC ID

At power up, system hardware assigns a unique APIC ID to each local APIC on the system bus (for Pentium 4 and Intel Xeon processors) or on the APIC bus (for P6 family and Pentium processors). The hardware assigned APIC ID is based on system topology and includes encoding for socket position and cluster information (see Figure 9-2 and Section 9.9.1, "Hierarchical Mapping of Shared Resources").

In MP systems, the local APIC ID is also used as a processor ID by the BIOS and the operating system. Some processors permit software to modify the APIC ID. However, the ability of software to modify the APIC ID is processor model specific. Because of this, operating system software should avoid writing to the local APIC ID register. The value returned by bits 31-24 of the EBX register (when the CPUID instruction is executed with a source operand value of 1 in the EAX register) is always the Initial APIC ID (determined by the platform initialization). This is true even if software has changed the value in the Local APIC ID register.

The processor receives the hardware assigned APIC ID (or Initial APIC ID) by sampling pins A11# and A12# and pins BR0# through BR3# (for the Pentium 4, Intel Xeon, and P6 family processors) and pins BE0# through BE3# (for the Pentium processor). The APIC ID latched from these pins is stored in the APIC ID field of the local APIC ID register (see Figure 11-6), and is used as the Initial APIC ID for the processor.

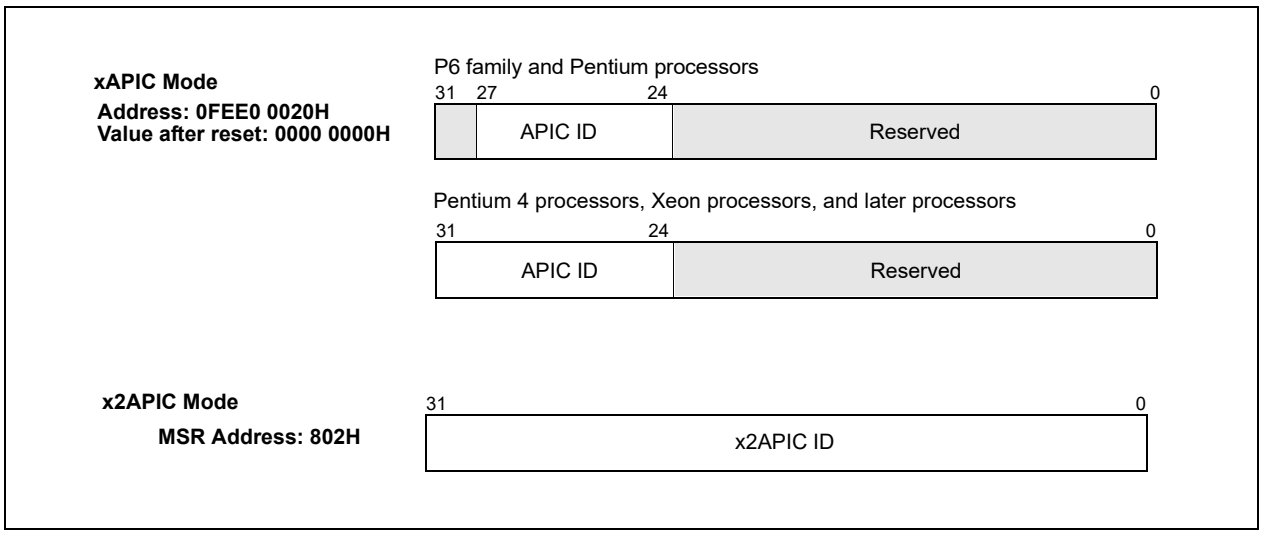

Figure 11-6. Local APIC ID Register

For the P6 family and Pentium processors, the local APIC ID field in the local APIC ID register is 4 bits. Encodings 0H through EH can be used to uniquely identify 15 different processors connected to the APIC bus. For the Pentium 4 and Intel Xeon processors, the xAPIC specification extends the local APIC ID field to 8 bits. These can be used to identify up to 255 processors in the system.

11.4.7 Local APIC State

The following sections describe the state of the local APIC and its registers following a power-up or reset, after the local APIC has been software disabled, following an INIT reset, and following an INIT-deassert message.

x2APIC will introduce 32-bit ID; see Section 11.12.

11.4.7.1 Local APIC State After Power-Up or Reset

Following a power-up or reset of the processor, the state of local APIC and its registers are as follows:

- The following registers are reset to all 0s.
    - IRR, ISR, TMR, ICR, LDR, and TPR.
    - Timer initial count and timer current count registers.
    - Divide configuration register.
- The DFR register is reset to all 1s.
- The LVT register is reset to 0s except for the mask bits; these are set to 1s.
- The local APIC version register is not affected.
- The local APIC ID register is set to a unique APIC ID. (Pentium and P6 family processors only). The Arb ID register is set to the value in the APIC ID register.
- The spurious-interrupt vector register is initialized to 000000FFH. By setting bit 8 to 0, software disables the local APIC.
- If the processor is the only processor in the system or it is the BSP in an MP system (see Section 9.4.1, "BSP and AP Processors"); the local APIC will respond normally to INIT and NMI messages, to INIT# signals and to STPCLK# signals. If the processor is in an MP system and has been designated as an AP; the local APIC will respond the same as for the BSP. In addition, it will respond to SIPI messages. For P6 family processors only, an AP will not respond to a STPCLK# signal.

11.4.7.2 Local APIC State After It Has Been Software Disabled

When the APIC software enable/disable flag in the spurious interrupt vector register has been explicitly cleared (as opposed to being cleared during a power up or reset), the local APIC is temporarily disabled (see Section 11.4.3, "Enabling or Disabling the Local APIC"). The operation and response of a local APIC while in this software-disabled state is as follows:

- The local APIC will respond normally to INIT, NMI, SMI, and SIPI messages.
- Pending interrupts in the IRR and ISR registers are held and require masking or handling by the CPU.
- The local APIC can still issue IPIs. It is software's responsibility to avoid issuing IPIs through the IPI mechanism and the ICR register if sending interrupts through this mechanism is not desired.
- The reception of any interrupt or transmission of any IPIs that are in progress when the local APIC is disabled are completed before the local APIC enters the software-disabled state.
- The mask bits for all the LVT entries are set. Attempts to reset these bits will be ignored.
- (For Pentium and P6 family processors) The local APIC continues to listen to all bus messages in order to keep its arbitration ID synchronized with the rest of the system.

11.4.7.3 Local APIC State After an INIT Reset ("Wait-for-SIPI" State)

An INIT reset of the processor can be initiated in either of two ways:

- By asserting the processor's INIT# pin.
- By sending the processor an INIT IPI (an IPI with the delivery mode set to INIT).

Upon receiving an INIT through either of these mechanisms, the processor responds by beginning the initialization process of the processor core and the local APIC. The state of the local APIC following an INIT reset is the same as it is after a power-up or hardware reset, except that the APIC ID and arbitration ID registers are not affected. This state is also referred to at the "wait-for-SIPI" state (see also: Section 9.4.2, "MP Initialization Protocol Requirements and Restrictions").

11.4.7.4 Local APIC State After It Receives an INIT-Deassert IPI

Only the Pentium and P6 family processors support the INIT-deassert IPI. An INIT-deassert IPI has no affect on the state of the APIC, other than to reload the arbitration ID register with the value in the APIC ID register.

11.4.8 Local APIC Version Register

The local APIC contains a hardwired version register. Software can use this register to identify the APIC version (see Figure 11-7). In addition, the register specifies the number of entries in the local vector table (LVT) for a specific implementation.

The fields in the local APIC version register are as follows:

Version The version numbers of the local APIC:

- 0XH — 82489DX discrete APIC.
- 10H - 15H — Integrated APIC.
- Other values reserved.

Max LVT Entry Shows the number of LVT entries minus 1. For the Pentium 4 and Intel Xeon processors (which have 6 LVT entries), the value returned in the Max LVT field is 5; for the P6 family processors (which have 5 LVT entries), the value returned is 4; for the Pentium processor (which has 4 LVT entries), the value returned is 3. For processors based on the Nehalem microarchitecture (which has 7 LVT entries) and onward, the value returned is 6.

Suppress EOI-broadcasts Indicates whether software can inhibit the broadcast of EOI message by setting bit 12 of the Spurious Interrupt Vector Register; see Section 11.8.5 and Section 11.9.

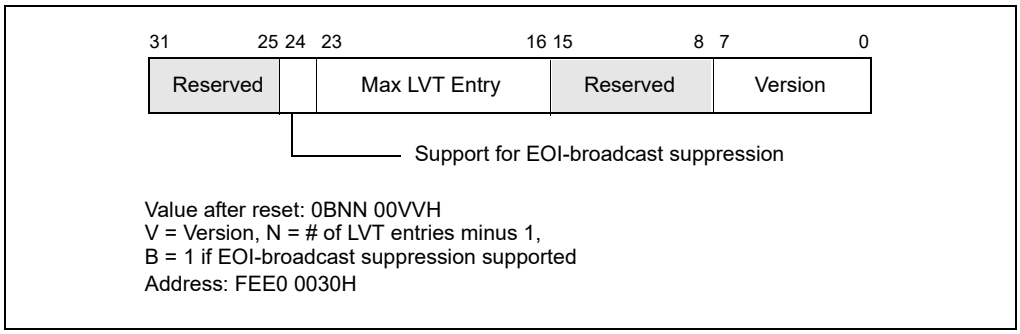

Figure 11-7. Local APIC Version Register

11.5 HANDLING LOCAL INTERRUPTS

The following sections describe facilities that are provided in the local APIC for handling local interrupts. These include: the processor's LINT0 and LINT1 pins, the APIC timer, the performance-monitoring counters, Intel Processor Trace, the thermal sensor, and the internal APIC error detector. Local interrupt handling facilities include: the LVT, the error status register (ESR), the divide configuration register (DCR), and the initial count and current count registers.

11.5.1 Local Vector Table

The local vector table (LVT) allows software to specify the manner in which the local interrupts are delivered to the processor core. It consists of the following 32-bit APIC registers (see Figure 11-8), one for each local interrupt:

- **LVT CMCI Register (FEE0 02F0H)** — Specifies interrupt delivery when an overflow condition of corrected machine check error count reaching a threshold value occurred in a machine check bank supporting CMCI (see Section 16.5.1, "CMCI Local APIC Interface").
- **LVT Timer Register (FEE0 0320H)** — Specifies interrupt delivery when the APIC timer signals an interrupt (see Section 11.5.4, "APIC Timer").
- **LVT Thermal Monitor Register (FEE0 0330H)** — Specifies interrupt delivery when the thermal sensor generates an interrupt (see Section 15.8.2, "Thermal Monitor"). This LVT entry is implementation specific, not architectural. If implemented, it will always be at base address FEE0 0330H.
- **LVT Performance Counter Register (FEE0 0340H)** — Specifies interrupt delivery when a performance counter generates an interrupt on overflow (see Section 20.6.3.5.8, "Generating an Interrupt on Overflow") or when Intel PT signals a ToPA PMI (see Section 33.2.7.2). This LVT entry is implementation specific, not architectural. If implemented, it is not guaranteed to be at base address FEE0 0340H.
- **LVT LINT0 Register (FEE0 0350H)** — Specifies interrupt delivery when an interrupt is signaled at the LINT0 pin.
- **LVT LINT1 Register (FEE0 0360H)** — Specifies interrupt delivery when an interrupt is signaled at the LINT1 pin.
- **LVT Error Register (FEE0 0370H)** — Specifies interrupt delivery when the APIC detects an internal error (see Section 11.5.3, "Error Handling").

The LVT performance counter register and its associated interrupt were introduced in the P6 processors and are also present in the Pentium 4 and Intel Xeon processors. The LVT thermal monitor register and its associated interrupt were introduced in the Pentium 4 and Intel Xeon processors. The LVT CMCI register and its associated interrupt were introduced in the Intel Xeon 5500 processors.

As shown in Figure 11-8, some of these fields and flags are not available (and reserved) for some entries.

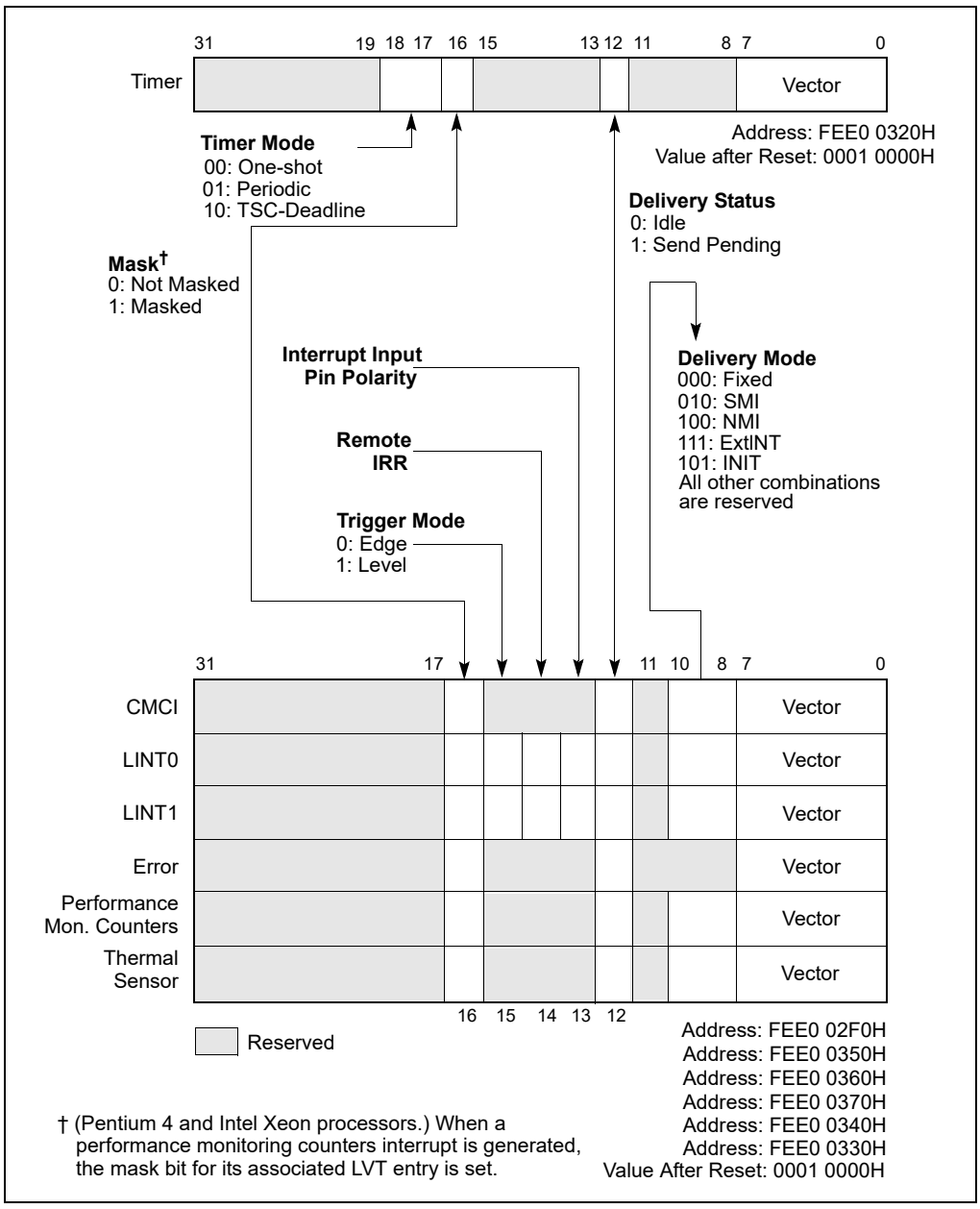

Figure 11-8. Local Vector Table (LVT)

The setup information that can be specified in the registers of the LVT table is as follows:

Vector Interrupt vector number.

Delivery Mode Specifies the type of interrupt to be sent to the processor. Some delivery modes will only operate as intended when used in conjunction with a specific trigger mode. The allowable delivery modes are as follows:

- **000 (Fixed)** Delivers the interrupt specified in the vector field.
- **010 (SMI)** Delivers an SMI interrupt to the processor core through the processor's local SMI signal path. When using this delivery mode, the vector field should be set to 00H for future compatibility.

100 (NMI) Delivers an NMI interrupt to the processor. The vector information is ignored.

101 (INIT) Delivers an INIT request to the processor core, which causes the processor to perform an INIT. When using this delivery mode, the vector field should be set to 00H for future compatibility. Not supported for the LVT CMCI register, the LVT thermal monitor register, or the LVT performance counter register.

110 Reserved; not supported for any LVT register.

111 (ExtINT) Causes the processor to respond to the interrupt as if the interrupt originated in an externally connected (8259A-compatible) interrupt controller. A special INTA bus cycle corresponding to ExtINT, is routed to the external controller. The external controller is expected to supply the vector information. The APIC architecture supports only one ExtINT source in a system, usually contained in the compatibility bridge. Only one processor in the system should have an LVT entry configured to use the ExtINT delivery mode. Not supported for the LVT CMCI register, the LVT thermal monitor register, or the LVT performance counter register.

Delivery Status (Read Only)
Indicates the interrupt delivery status, as follows:

0 (Idle) There is currently no activity for this interrupt source, or the previous interrupt from this source was delivered to the processor core and accepted.

1 (Send Pending)
Indicates that an interrupt from this source has been delivered to the processor core but has not yet been accepted (see Section 11.5.5, "Local Interrupt Acceptance").

Interrupt Input Pin Polarity
Specifies the polarity of the corresponding interrupt pin: (0) active high or (1) active low.

Remote IRR Flag (Read Only)
For fixed mode, level-triggered interrupts; this flag is set when the local APIC accepts the interrupt for servicing and is reset when an EOI command is received from the processor. The meaning of this flag is undefined for edge-triggered interrupts and other delivery modes.

Trigger Mode Selects the trigger mode for the local LINT0 and LINT1 pins: (0) edge sensitive and (1) level sensitive. This flag is only used when the delivery mode is Fixed. When the delivery mode is NMI, SMI, or INIT, the trigger mode is always edge sensitive. When the delivery mode is ExtINT, the trigger mode is always level sensitive. The timer and error interrupts are always treated as edge sensitive.

If the local APIC is not used in conjunction with an I/O APIC and fixed delivery mode is selected; the Pentium 4, Intel Xeon, and P6 family processors will always use level-sensitive triggering, regardless if edge-sensitive triggering is selected.

Software should always set the trigger mode in the LVT LINT1 register to 0 (edge sensitive). Level-sensitive interrupts are not supported for LINT1.

Mask Interrupt mask: (0) enables reception of the interrupt and (1) inhibits reception of the interrupt. When the local APIC handles a performance-monitoring counters interrupt, it automatically sets the mask flag in the LVT performance counter register. This flag is set to 1 on reset. It can be cleared only by software.

Timer Mode Bits 18:17 selects the timer mode (see Section 11.5.4):

(00b) one-shot mode using a count-down value,

(01b) periodic mode reloading a count-down value,

(10b) TSC-Deadline mode using absolute target value in IA32_TSC_DEADLINE MSR (see Section 11.5.4.1),

(11b) is reserved.

11.5.2 Valid Interrupt Vectors

The Intel 64 and IA-32 architectures define 256 vector numbers, ranging from 0 through 255 (see Section 6.2, "Exception and Interrupt Vectors"). Local and I/O APICs support 240 of these vectors (in the range of 16 to 255) as valid interrupts.

When an interrupt vector in the range of 0 to 15 is sent or received through the local APIC, the APIC indicates an illegal vector in its Error Status Register (see Section 11.5.3, "Error Handling"). The Intel 64 and IA-32 architectures reserve vectors 16 through 31 for predefined interrupts, exceptions, and Intel-reserved encodings (see Table 6-1). However, the local APIC does not treat vectors in this range as illegal.

When an illegal vector value (0 to 15) is written to an LVT entry and the delivery mode is Fixed (bits 8-11 equal 0), the APIC may signal an illegal vector error, without regard to whether the mask bit is set or whether an interrupt is actually seen on the input.

11.5.3 Error Handling

The local APIC records errors detected during interrupt handling in the error status register (ESR). The format of the ESR is given in Figure 11-9; it contains the following flags:

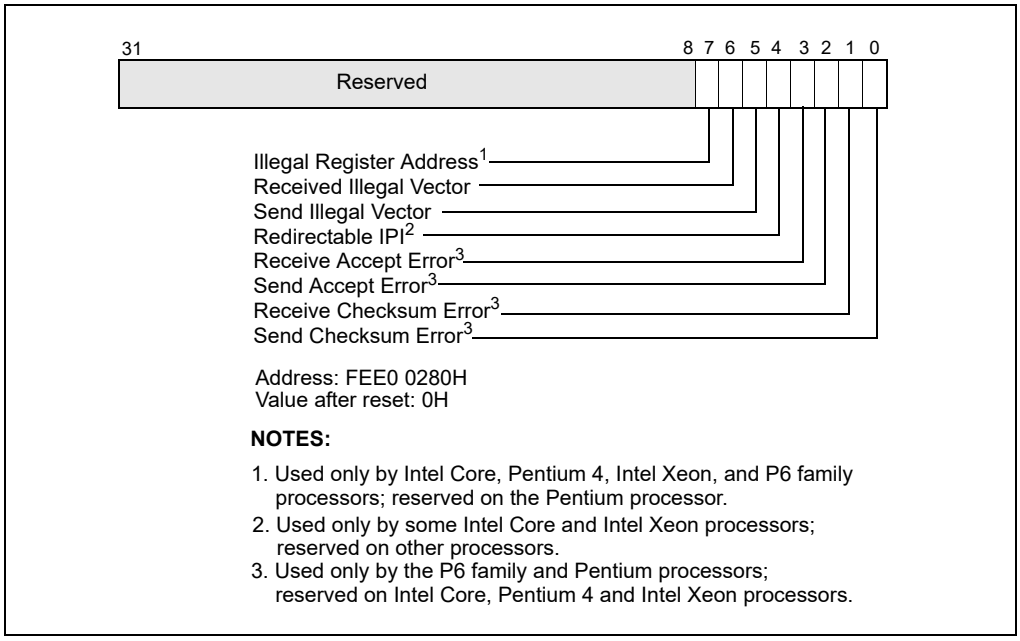

Figure 11-9. Error Status Register (ESR)

- Bit 0: Send Checksum Error.
  Set when the local APIC detects a checksum error for a message that it sent on the APIC bus. Used only on P6 family and Pentium processors.
- Bit 1: Receive Checksum Error.
  Set when the local APIC detects a checksum error for a message that it received on the APIC bus. Used only on P6 family and Pentium processors.
- Bit 2: Send Accept Error.
  Set when the local APIC detects that a message it sent was not accepted by any APIC on the APIC bus. Used only on P6 family and Pentium processors.
- Bit 3: Receive Accept Error.
  Set when the local APIC detects that the message it received was not accepted by any APIC on the APIC bus, including itself. Used only on P6 family and Pentium processors.

- Bit 4: Redirectable IPI.
  Set when the local APIC detects an attempt to send an IPI with the lowest-priority delivery mode and the local APIC does not support the sending of such IPIs. This bit is used on some Intel Core and Intel Xeon processors. As noted in Section 11.6.2, the ability of a processor to send a lowest-priority IPI is model-specific and should be avoided.
- Bit 5: Send Illegal Vector.
  Set when the local APIC detects an illegal vector (one in the range 0 to 15) in the message that it is sending. This occurs as the result of a write to the ICR (in both xAPIC and x2APIC modes) or to SELF IPI register (x2APIC mode only) with an illegal vector.

  If the local APIC does not support the sending of lowest-priority IPIs and software writes the ICR to send a lowest-priority IPI with an illegal vector, the local APIC sets only the "redirectable IPI" error bit. The interrupt is not processed and hence the "Send Illegal Vector" bit is not set in the ESR.
- Bit 6: Receive Illegal Vector.
  Set when the local APIC detects an illegal vector (one in the range 0 to 15) in an interrupt message it receives or in an interrupt generated locally from the local vector table or via a self IPI. Such interrupts are not delivered to the processor; the local APIC will never set an IRR bit in the range 0 to 15.
- Bit 7: Illegal Register Address
  Set when the local APIC is in xAPIC mode and software attempts to access a register that is reserved in the processor's local-APIC register-address space; see Table 10-1. (The local-APIC register-address space comprises the 4 KBytes at the physical address specified in the IA32_APIC_BASE MSR.) Used only on Intel Core, Intel Atom, Pentium 4, Intel Xeon, and P6 family processors.

  In x2APIC mode, software accesses the APIC registers using the RDMSR and WRMSR instructions. Use of one of these instructions to access a reserved register cause a general-protection exception (see Section 10.12.1.3). They do not set the "Illegal Register Access" bit in the ESR.

The ESR is a write/read register. Before attempt to read from the ESR, software should first write to it. (The value written does not affect the values read subsequently; only zero may be written in x2APIC mode.) This write clears any previously logged errors and updates the ESR with any errors detected since the last write to the ESR. This write also rearms the APIC error interrupt triggering mechanism.

The LVT Error Register (see Section 11.5.1) allows specification of the vector of the interrupt to be delivered to the processor core when APIC error is detected. The register also provides a means of masking an APIC-error interrupt. This masking only prevents delivery of APIC-error interrupts; the APIC continues to record errors in the ESR.

11.5.4 APIC Timer

The local APIC unit contains a 32-bit programmable timer that is available to software to time events or operations. This timer is set up by programming four registers: the divide configuration register (see Figure 11-10), the initial-count and current-count registers (see Figure 11-11), and the LVT timer register (see Figure 11-8).

If CPUID.06H:EAX.ARAT[bit 2] = 1, the processor's APIC timer runs at a constant rate regardless of P-state transitions and it continues to run at the same rate in deep C-states.

If CPUID.06H:EAX.ARAT[bit 2] = 0 or if CPUID 06H is not supported, the APIC timer may temporarily stop while the processor is in deep C-states or during transitions caused by Enhanced Intel SpeedStep® Technology.

The APIC timer frequency will be the processor's bus clock or core crystal clock frequency (when TSC/core crystal clock ratio is enumerated in CPUID leaf 0x15) divided by the value specified in the divide configuration register.

The timer can be configured through the timer LVT entry for one-shot or periodic operation. In one-shot mode, the timer is started by programming its initial-count register. The initial count value is then copied into the current-count register and count-down begins. After the timer reaches zero, a timer interrupt is generated and the timer remains at its 0 value until reprogrammed.

In periodic mode, the timer is started by writing to the initial-count register (as in one-shot mode), and the value written is copied into the current-count register, which counts down. The current-count register is automatically reloaded from the initial-count register when the count reaches 0 and a timer interrupt is generated, and the count-down is repeated. If during the count-down process the initial-count register is set, counting will restart, using the new initial-count value. The initial-count register is a read-write register; the current-count register is read only.

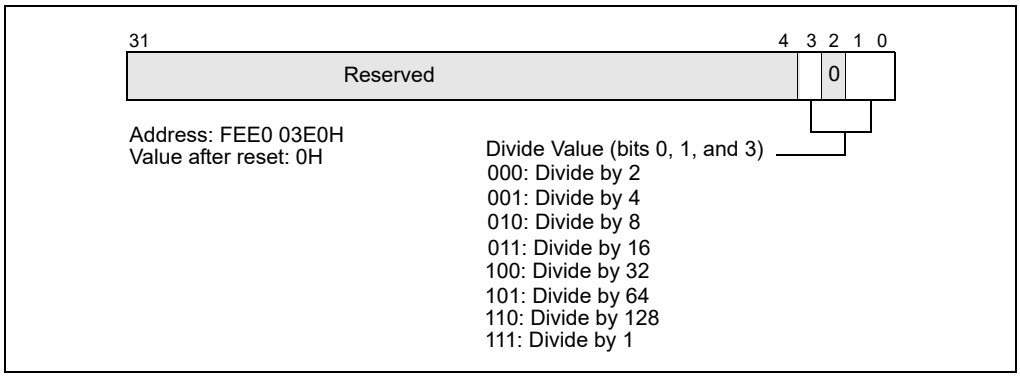

Figure 11-10. Divide Configuration Register

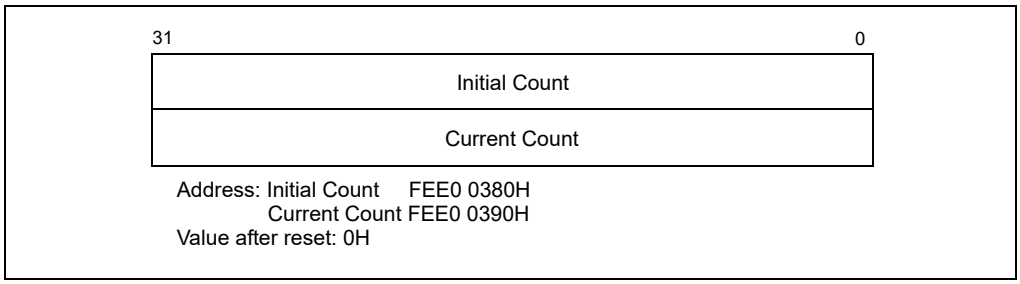

Figure 11-11. Initial Count and Current Count Registers

A write of 0 to the initial-count register effectively stops the local APIC timer, in both one-shot and periodic mode.

The LVT timer register determines the vector number that is delivered to the processor with the timer interrupt that is generated when the timer count reaches zero. The mask flag in the LVT timer register can be used to mask the timer interrupt.

NOTE

Changing the mode of the APIC timer (from one-shot to periodic or vice versa) by writing to the timer LVT entry does not start the timer. To start the timer, it is necessary to write to the initial-count register as described above.

11.5.4.1 TSC-Deadline Mode

The mode of operation of the local-APIC timer is determined by the LVT Timer Register. Specifically:

- If CPUID.01H:ECX.TSC_Deadline[bit 24] = 0, the mode is determined by bit 17 of the register.
- If CPUID.01H:ECX.TSC_Deadline[bit 24] = 1, the mode is determined by bits 18:17. See Figure 11-8. (If CPUID.01H:ECX.TSC_Deadline[bit 24] = 0, bit 18 of the register is reserved.)

The supported timer modes are given in Table 11-2. The three modes of the local APIC timer are mutually exclusive.

Table 11-2. Local APIC Timer Modes

LVT Bits [18:17]	Timer Mode
00b	One-shot mode, program count-down value in an initial-count register. See Section 11.5.4
01b	Periodic mode, program interval value in an initial-count register. See Section 11.5.4
10b	TSC-Deadline mode, program target value in IA32_TSC_DEADLINE MSR.
11b	Reserved

TSC-deadline mode allows software to use the local APIC timer to signal an interrupt at an absolute time. In TSC-deadline mode, writes to the initial-count register are ignored; and current-count register always reads 0. Instead, timer behavior is controlled using the IA32_TSC_DEADLINE MSR.

The IA32_TSC_DEADLINE MSR (MSR address 6E0H) is a per-logical processor MSR that specifies the time at which a timer interrupt should occur. Writing a non-zero 64-bit value into IA32_TSC_DEADLINE arms the timer. An interrupt is generated when the logical processor's time-stamp counter equals or exceeds the target value in the IA32_TSC_DEADLINE MSR.[1] When the timer generates an interrupt, it disarms itself and clears the IA32_TSC_DEADLINE MSR. Thus, each write to the IA32_TSC_DEADLINE MSR generates at most one timer interrupt.

In TSC-deadline mode, writing 0 to the IA32_TSC_DEADLINE MSR disarms the local-APIC timer. Transitioning between TSC-deadline mode and other timer modes also disarms the timer.

The hardware reset value of the IA32_TSC_DEADLINE MSR is 0. In other timer modes (LVT bit 18 = 0), the IA32_TSC_DEADLINE MSR reads zero and writes are ignored.

Software can configure the TSC-deadline timer to deliver a single interrupt using the following algorithm:

1. Detect support for TSC-deadline mode by verifying CPUID.1:ECX.24 = 1.
2. Select the TSC-deadline mode by programming bits 18:17 of the LVT Timer register with 10b.
3. Program the IA32_TSC_DEADLINE MSR with the target TSC value at which the timer interrupt is desired. This causes the processor to arm the timer.
4. The processor generates a timer interrupt when the value of time-stamp counter is greater than or equal to that of IA32_TSC_DEADLINE. It then disarms the timer and clear the IA32_TSC_DEADLINE MSR. (Both the time-stamp counter and the IA32_TSC_DEADLINE MSR are 64-bit unsigned integers.)
5. Software can re-arm the timer by repeating step 3.

The following are usage guidelines for TSC-deadline mode:

- Writes to the IA32_TSC_DEADLINE MSR are not serialized. Therefore, system software should not use WRMSR to the IA32_TSC_DEADLINE MSR as a serializing instruction. Read and write accesses to the IA32_TSC_DEADLINE and other MSR registers will occur in program order.
- Software can disarm the timer at any time by writing 0 to the IA32_TSC_DEADLINE MSR.
- If timer is armed, software can change the deadline (forward or backward) by writing a new value to the IA32_TSC_DEADLINE MSR.
- If software disarms the timer or postpones the deadline, race conditions may result in the delivery of a spurious timer interrupt. Software is expected to detect such spurious interrupts by checking the current value of the time-stamp counter to confirm that the interrupt was desired.[3]
- In xAPIC mode (in which the local-APIC registers are memory-mapped), software must order the memory-mapped write to the LVT entry that enables TSC-deadline mode and any subsequent WRMSR to the IA32_TSC_DEADLINE MSR. Software can assure proper ordering by executing the MFENCE instruction after the memory-mapped write and before any WRMSR. (In x2APIC mode, the WRMSR instruction is used to write to the LVT entry. The processor ensures the ordering of this write and any subsequent WRMSR to the deadline; no fencing is required.)

11.5.5 Local Interrupt Acceptance

When a local interrupt is sent to the processor core, it is subject to the acceptance criteria specified in the interrupt acceptance flow chart in Figure 11-17. If the interrupt is accepted, it is logged into the IRR register and handled by the processor according to its priority (see Section 11.8.4, "Interrupt Acceptance for Fixed Interrupts"). If the interrupt is not accepted, it is sent back to the local APIC and retried.

---

1. If the logical processor is in VMX non-root operation, a read of the time-stamp counter (using either RDMSR, RDTSC, or RDTSCP) may not return the actual value of the time-stamp counter; see Chapter 26 of the *Intel® 64 and IA-32 Architectures Software Developer's Manual, Volume 3C*. It is the responsibility of software operating in VMX root operation to coordinate the virtualization of the time-stamp counter and the IA32_TSC_DEADLINE MSR.

11.6 ISSUING INTERPROCESSOR INTERRUPTS

The following sections describe the local APIC facilities that are provided for issuing interprocessor interrupts (IPIs) from software. The primary local APIC facility for issuing IPIs is the interrupt command register (ICR). The ICR can be used for the following functions:

- To send an interrupt to another processor.
- To allow a processor to forward an interrupt that it received but did not service to another processor for servicing.
- To direct the processor to interrupt itself (perform a self interrupt).
- To deliver special IPIs, such as the start-up IPI (SIPI) message, to other processors.

Interrupts generated with this facility are delivered to the other processors in the system through the system bus (for Pentium 4 and Intel Xeon processors) or the APIC bus (for P6 family and Pentium processors). The ability for a processor to send a lowest priority IPI is model specific and should be avoided by BIOS and operating system software.

11.6.1 Interrupt Command Register (ICR)

The interrupt command register (ICR) is a 64-bit[1] local APIC register (see Figure 11-12) that allows software running on the processor to specify and send interprocessor interrupts (IPIs) to other processors in the system.

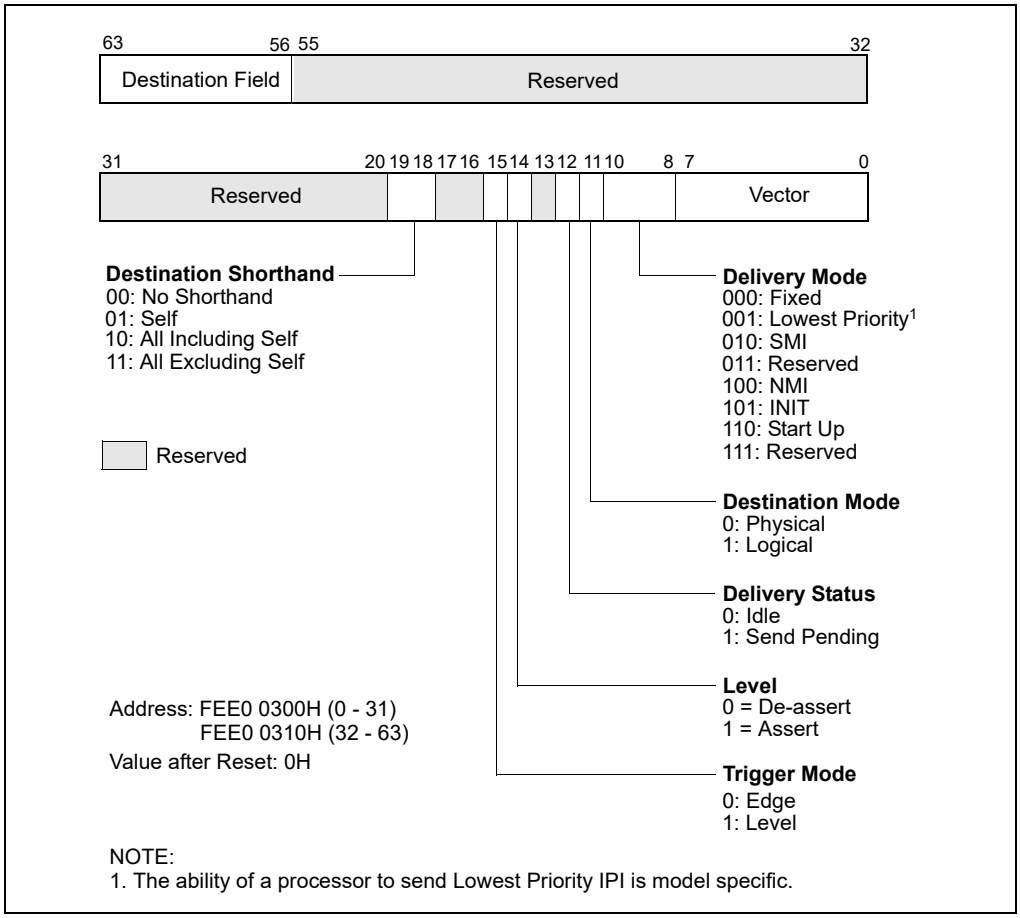

Figure 11-12. Interrupt Command Register (ICR)

1. In XAPIC mode the ICR is addressed as two 32-bit registers, ICR_LOW (FFE0 0300H) and ICR_HIGH (FFE0 0310H). In x2APIC mode, the ICR uses MSR 830H.

To send an IPI, software must set up the ICR to indicate the type of IPI message to be sent and the destination processor or processors. (All fields of the ICR are read-write by software with the exception of the delivery status field, which is read-only.) The act of writing to the low doubleword of the ICR causes the IPI to be sent.

The ICR consists of the following fields.

Vector The vector number of the interrupt being sent.

Delivery Mode Specifies the type of IPI to be sent. This field is also know as the IPI message type field.

- **000 (Fixed)** Delivers the interrupt specified in the vector field to the target processor or processors.
- **001 (Lowest Priority)** Same as fixed mode, except that the interrupt is delivered to the processor executing at the lowest priority among the set of processors specified in the destination field. The ability for a processor to send a lowest priority IPI is model specific and should be avoided by BIOS and operating system software.
- **010 (SMI)** Delivers an SMI interrupt to the target processor or processors. The vector field must be programmed to 00H for future compatibility.
- **011 (Reserved)**
- **100 (NMI)** Delivers an NMI interrupt to the target processor or processors. The vector information is ignored.
- **101 (INIT)** Delivers an INIT request to the target processor or processors, which causes them to perform an INIT. As a result of this IPI message, all the target processors perform an INIT. The vector field must be programmed to 00H for future compatibility.
- **101 (INIT Level De-assert)** (Not supported in the Pentium 4 and Intel Xeon processors.) Sends a synchronization message to all the local APICs in the system to set their arbitration IDs (stored in their Arb ID registers) to the values of their APIC IDs (see Section 11.7, "System and APIC Bus Arbitration"). For this delivery mode, the level flag must be set to 0 and trigger mode flag to 1. This IPI is sent to all processors, regardless of the value in the destination field or the destination shorthand field; however, software should specify the "all including self" shorthand.
- **110 (Start-Up)** Sends a special "start-up" IPI (called a SIPI) to the target processor or processors. The vector typically points to a start-up routine that is part of the BIOS boot-strap code (see Section 9.4, "Multiple-Processor (MP) Initialization"). IPIs sent with this delivery mode are not automatically retried if the source APIC is unable to deliver it. It is up to the software to determine if the SIPI was not successfully delivered and to reissue the SIPI if necessary.

Destination Mode Selects either physical (0) or logical (1) destination mode (see Section 11.6.2, "Determining IPI Destination").

Delivery Status (Read Only) Indicates the IPI delivery status, as follows:

- **0 (Idle)** Indicates that this local APIC has completed sending any previous IPIs.
- **1 (Send Pending)** Indicates that this local APIC has not completed sending the last IPI.

Level For the INIT level de-assert delivery mode this flag must be set to 0; for all other delivery modes it must be set to 1. (This flag has no meaning in Pentium 4 and Intel Xeon processors, and will always be issued as a 1.)

Trigger Mode Selects the trigger mode when using the INIT level de-assert delivery mode: edge (0) or level (1). It is ignored for all other delivery modes. (This flag has no meaning in Pentium 4 and Intel Xeon processors, and will always be issued as a 0.)

Destination Shorthand

Indicates whether a shorthand notation is used to specify the destination of the interrupt and, if so, which shorthand is used. Destination shorthands are used in place of the 8-bit destination field, and can be sent by software using a single write to the low doubleword of the ICR. Shorthands are defined for the following cases: software self interrupt, IPIs to all processors in the system including the sender, IPIs to all processors in the system excluding the sender.

00: (No Shorthand)
The destination is specified in the destination field.

01: (Self) The issuing APIC is the one and only destination of the IPI. This destination shorthand allows software to interrupt the processor on which it is executing. An APIC implementation is free to deliver the self-interrupt message internally or to issue the message to the bus and "snoop" it as with any other IPI message.

10: (All Including Self)
The IPI is sent to all processors in the system including the processor sending the IPI. The APIC will broadcast an IPI message with the destination field set to FH for Pentium and P6 family processors and to FFH for Pentium 4 and Intel Xeon processors.

11: (All Excluding Self)
The IPI is sent to all processors in a system with the exception of the processor sending the IPI. The APIC broadcasts a message with the physical destination mode and destination field set to FH for Pentium and P6 family processors and to FFH for Pentium 4 and Intel Xeon processors. Support for this destination shorthand in conjunction with the lowest-priority delivery mode is model specific. For Pentium 4 and Intel Xeon processors, when this shorthand is used together with lowest priority delivery mode, the IPI may be redirected back to the issuing processor.

Destination Specifies the target processor or processors. This field is only used when the destination shorthand field is set to 00B. If the destination mode is set to physical, then bits 56 through 59 contain the APIC ID of the target processor for Pentium and P6 family processors and bits 56 through 63 contain the APIC ID of the target processor the for Pentium 4 and Intel Xeon processors. If the destination mode is set to logical, the interpretation of the 8-bit destination field depends on the settings of the DFR and LDR registers of the local APICs in all the processors in the system (see Section 11.6.2, "Determining IPI Destination").

Not all combinations of options for the ICR are valid. Table 11-3 shows the valid combinations for the fields in the ICR for the Pentium 4 and Intel Xeon processors; Table 11-4 shows the valid combinations for the fields in the ICR for the P6 family processors. Also note that the lower half of the ICR may not be preserved over transitions to the deepest C-States.

ICR operation in x2APIC mode is discussed in Section 11.12.9.

Table 11-3. Valid Combinations for Pentium 4 and Intel Xeon Processors Local xAPIC Interrupt Command Register

Destination Shorthand	Valid/Invalid	Trigger Mode	Delivery Mode	Destination Mode
No Shorthand	Valid	Edge	All Modes[1]	Physical or Logical
No Shorthand	Invalid[2]	Level	All Modes	Physical or Logical
Self	Valid	Edge	Fixed	X[3]
Self	Invalid[2]	Level	Fixed	X
Self	Invalid	X	Lowest Priority, NMI, INIT, SMI, Start-Up	X
All Including Self	Valid	Edge	Fixed	X
All Including Self	Invalid[2]	Level	Fixed	X

Table 11-3. Valid Combinations for Pentium 4 and Intel Xeon Processors Local xAPIC Interrupt Command Register

Destination Shorthand	Valid/Invalid	Trigger Mode	Delivery Mode	Destination Mode
All Including Self	Invalid	X	Lowest Priority, NMI, INIT, SMI, Start-Up	X
All Excluding Self	Valid	Edge	Fixed, Lowest Priority[1, 4], NMI, INIT, SMI, Start-Up	X
All Excluding Self	Invalid[2]	Level	FIxed, Lowest Priority[4], NMI, INIT, SMI, Start-Up	X

NOTES:

1. The ability of a processor to send a lowest priority IPI is model specific.
2. For these interrupts, if the trigger mode bit is 1 (Level), the local xAPIC will override the bit setting and issue the interrupt as an edge triggered interrupt.
3. X means the setting is ignored.
4. When using the "lowest priority" delivery mode and the "all excluding self" destination, the IPI can be redirected back to the issuing APIC, which is essentially the same as the "all including self" destination mode.

Table 11-4. Valid Combinations for the P6 Family Processor Local APIC Interrupt Command Register

Destination Shorthand	Valid/Invalid	Trigger Mode	Delivery Mode	Destination Mode
No Shorthand	Valid	Edge	All Modes[1]	Physical or Logical
No Shorthand	Valid[2]	Level	Fixed, Lowest Priority[1], NMI	Physical or Logical
No Shorthand	Valid[3]	Level	INIT	Physical or Logical
Self	Valid	Edge	Fixed	X[4]
Self	Valid[2]	Level	Fixed	X
Self	Invalid[5]	X	Lowest Priority, NMI, INIT, SMI, Start-Up	X
All including Self	Valid	Edge	Fixed	X
All including Self	Valid[2]	Level	Fixed	X
All including Self	Invalid[5]	X	Lowest Priority, NMI, INIT, SMI, Start-Up	X
All excluding Self	Valid	Edge	All Modes[1]	X
All excluding Self	Valid[2]	Level	Fixed, Lowest Priority[1], NMI	X
All excluding Self	Invalid[5]	Level	SMI, Start-Up	X
All excluding Self	Valid[3]	Level	INIT	X
X	Invalid[5]	Level	SMI, Start-Up	X

NOTES:

1. The ability of a processor to send a lowest priority IPI is model specific.
2. Treated as edge triggered if level bit is set to 1, otherwise ignored.
3. Treated as edge triggered when Level bit is set to 1; treated as "INIT Level Deassert" message when level bit is set to 0 (deassert). Only INIT level deassert messages are allowed to have the level bit set to 0. For all other messages the level bit must be set to 1.
4. X means the setting is ignored.
5. The behavior of the APIC is undefined.

11.6.2 Determining IPI Destination

The destination of an IPI[1] can be one, all, or a subset (group) of the processors on the system bus. The sender of the IPI specifies the destination of an IPI with the following APIC registers and fields within the registers:

- **ICR Register** — The following fields in the ICR register are used to specify the destination of an IPI.

1. Determination of IPI destinations in x2APIC mode is discussed in Section 10.12.10.

  - **Destination Mode** — Selects one of two destination modes (physical or logical).
  - **Destination Field** — In physical destination mode, used to specify the APIC ID of the destination processor; in logical destination mode, used to specify a message destination address (MDA) that can be used to select specific processors in clusters.
  - **Destination Shorthand** — A quick method of specifying all processors, all excluding self, or self as the destination.
  - **Delivery mode, Lowest Priority** — Architecturally specifies that a lowest-priority arbitration mechanism be used to select a destination processor from a specified group of processors. The ability of a processor to send a lowest priority IPI is model specific and should be avoided by BIOS and operating system software.
- **Local destination register (LDR)** — Used in conjunction with the logical destination mode and MDAs to select the destination processors.
- **Destination format register (DFR)** — Used in conjunction with the logical destination mode and MDAs to select the destination processors.

How the ICR, LDR, and DFR are used to select an IPI destination depends on the destination mode used: physical, logical, broadcast/self, or lowest-priority delivery mode. These destination modes are described in the following sections.

11.6.2.1 Physical Destination Mode

In physical destination mode, the destination processor is specified by its local APIC ID (see Section 11.4.6, "Local APIC ID"). For Pentium 4 and Intel Xeon processors, either a single destination (local APIC IDs 00H through FEH) or a broadcast to all APICs (the APIC ID is FFH) may be specified in physical destination mode.

A broadcast IPI (bits 28-31 of the MDA are 1's) or I/O subsystem initiated interrupt with lowest priority delivery mode is not supported in physical destination mode and must not be configured by software. Also, for any non-broadcast IPI or I/O subsystem initiated interrupt with lowest priority delivery mode, software must ensure that APICs defined in the interrupt address are present and enabled to receive interrupts.

For the P6 family and Pentium processors, a single destination is specified in physical destination mode with a local APIC ID of 0H through 0EH, allowing up to 15 local APICs to be addressed on the APIC bus. A broadcast to all local APICs is specified with 0FH.

NOTE

The number of local APICs that can be addressed on the system bus may be restricted by hardware.

11.6.2.2 Logical Destination Mode

In logical destination mode, IPI destination is specified using an 8-bit message destination address (MDA), which is entered in the destination field of the ICR. Upon receiving an IPI message that was sent using logical destination mode, a local APIC compares the MDA in the message with the values in its LDR and DFR to determine if it should accept and handle the IPI. For both configurations of logical destination mode, when combined with lowest priority delivery mode, software is responsible for ensuring that all of the local APICs included in or addressed by the IPI or I/O subsystem interrupt are present and enabled to receive the interrupt.

Figure 11-13 shows the layout of the logical destination register (LDR). The 8-bit logical APIC ID field in this register is used to create an identifier that can be compared with the MDA.

NOTE

The logical APIC ID should not be confused with the local APIC ID that is contained in the local APIC ID register.

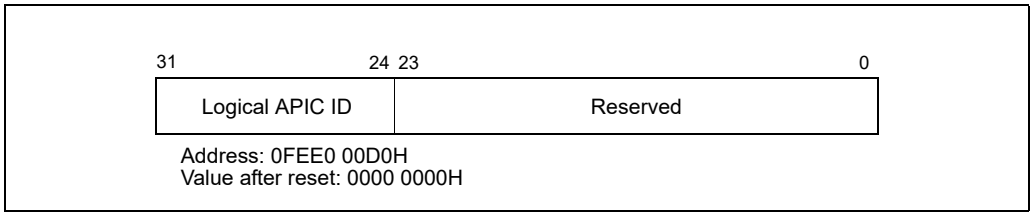

Figure 11-13. Logical Destination Register (LDR)

Figure 11-14 shows the layout of the destination format register (DFR). The 4-bit model field in this register selects one of two models (flat or cluster) that can be used to interpret the MDA when using logical destination mode.

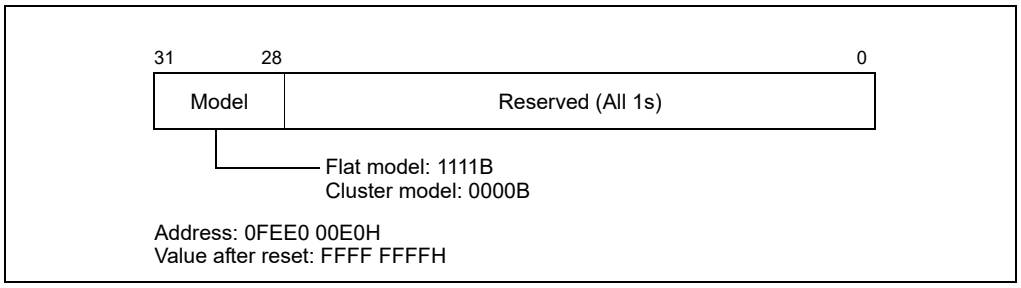

Figure 11-14. Destination Format Register (DFR)

The interpretation of MDA for the two models is described in the following paragraphs.

1. **Flat Model** — This model is selected by programming DFR bits 28 through 31 to 1111. Here, a unique logical APIC ID can be established for up to 8 local APICs by setting a different bit in the logical APIC ID field of the LDR for each local APIC. A group of local APICs can then be selected by setting one or more bits in the MDA.

   Each local APIC performs a bit-wise AND of the MDA and its logical APIC ID. If a true condition (non-zero) is detected, the local APIC accepts the IPI message. A broadcast to all APICs is achieved by setting the MDA to 1s.

2. **Cluster Model** — This model is selected by programming DFR bits 28 through 31 to 0000. This model supports two basic destination schemes: flat cluster and hierarchical cluster.

   The flat cluster destination model is only supported for P6 family and Pentium processors. Using this model, all APICs are assumed to be connected through the APIC bus. Bits 60 through 63 of the MDA contains the encoded address of the destination cluster and bits 56 through 59 identify up to four local APICs within the cluster (each bit is assigned to one local APIC in the cluster, as in the flat connection model). To identify one or more local APICs, bits 60 through 63 of the MDA are compared with bits 28 through 31 of the LDR to determine if a local APIC is part of the cluster. Bits 56 through 59 of the MDA are compared with Bits 24 through 27 of the LDR to identify a local APICs within the cluster.

   Sets of processors within a cluster can be specified by writing the target cluster address in bits 60 through 63 of the MDA and setting selected bits in bits 56 through 59 of the MDA, corresponding to the chosen members of the cluster. In this mode, 15 clusters (with cluster addresses of 0 through 14) each having 4 local APICs can be specified in the message. For the P6 and Pentium processor's local APICs, however, the APIC arbitration ID supports only 15 APIC agents. Therefore, the total number of processors and their local APICs supported in this mode is limited to 15. Broadcast to all local APICs is achieved by setting all destination bits to one. This guarantees a match on all clusters and selects all APICs in each cluster. A broadcast IPI or I/O subsystem broadcast interrupt with lowest priority delivery mode is not supported in cluster mode and must not be configured by software.

   The hierarchical cluster destination model can be used with Pentium 4, Intel Xeon, P6 family, or Pentium processors. With this model, a hierarchical network can be created by connecting different flat clusters via independent system or APIC buses. This scheme requires a cluster manager within each cluster, which is responsible for handling message passing between system or APIC buses. One cluster contains up to 4 agents. Thus 15 cluster managers, each with 4 agents, can form a network of up to 60 APIC agents. Note that hierar-

chical APIC networks requires a special cluster manager device, which is not part of the local or the I/O APIC units.

NOTES

All processors that have their APIC software enabled (using the spurious vector enable/disable bit) must have their DFRs (Destination Format Registers) programmed identically.

The default mode for DFR is flat mode. If you are using cluster mode, DFRs must be programmed before the APIC is software enabled. Since some chipsets do not accurately track a system view of the logical mode, program DFRs as soon as possible after starting the processor.

11.6.2.3 Broadcast/Self Delivery Mode

The destination shorthand field of the ICR allows the delivery mode to be by-passed in favor of broadcasting the IPI to all the processors on the system bus and/or back to itself (see Section 11.6.1, "Interrupt Command Register (ICR)"). Three destination shorthands are supported: self, all excluding self, and all including self. The destination mode is ignored when a destination shorthand is used.

11.6.2.4 Lowest Priority Delivery Mode

With lowest priority delivery mode, the ICR is programmed to send an IPI to several processors on the system bus, using the logical or shorthand destination mechanism for selecting the processor. The selected processors then arbitrate with one another over the system bus or the APIC bus, with the lowest-priority processor accepting the IPI.

For systems based on the Intel Xeon processor, the chipset bus controller accepts messages from the I/O APIC agents in the system and directs interrupts to the processors on the system bus. When using the lowest priority delivery mode, the chipset chooses a target processor to receive the interrupt out of the set of possible targets. The Pentium 4 processor provides a special bus cycle on the system bus that informs the chipset of the current task priority for each logical processor in the system. The chipset saves this information and uses it to choose the lowest priority processor when an interrupt is received.

For systems based on P6 family processors, the processor priority used in lowest-priority arbitration is contained in the arbitration priority register (APR) in each local APIC. Figure 11-15 shows the layout of the APR.

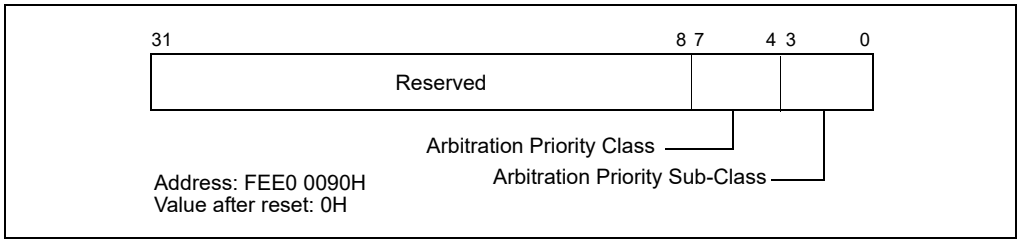

Figure 11-15. Arbitration Priority Register (APR)

The APR value is computed as follows:

```
IF (TPR[7:4] ≥ IRRV[7:4]) AND (TPR[7:4] > ISRV[7:4])
    THEN
        APR[7:0] ← TPR[7:0]
    ELSE
        APR[7:4] ← max(TPR[7:4] AND ISRV[7:4], IRRV[7:4])
        APR[3:0] ← 0.
```

Here, the TPR value is the task priority value in the TPR (see Figure 11-18), the IRRV value is the vector number for the highest priority bit that is set in the IRR (see Figure 11-20) or 00H (if no IRR bit is set), and the ISRV value is the vector number for the highest priority bit that is set in the ISR (see Figure 11-20). Following arbitration

among the destination processors, the processor with the lowest value in its APR handles the IPI and the other processors ignore it.

(P6 family and Pentium processors.) For these processors, if a **focus processor** exists**,** it may accept the interrupt, regardless of its priority. A processor is said to be the focus of an interrupt if it is currently servicing that interrupt or if it has a pending request for that interrupt. For Intel Xeon processors, the concept of a focus processor is not supported.

In operating systems that use the lowest priority delivery mode but do not update the TPR, the TPR information saved in the chipset will potentially cause the interrupt to be always delivered to the same processor from the logical set. This behavior is functionally backward compatible with the P6 family processor but may result in unexpected performance implications.

11.6.3 IPI Delivery and Acceptance

When the low double-word of the ICR is written to, the local APIC creates an IPI message from the information contained in the ICR and sends the message out on the system bus (Pentium 4 and Intel Xeon processors) or the APIC bus (P6 family and Pentium processors). The manner in which these IPIs are handled after being issued is described in Section 11.8, "Handling Interrupts."

11.7 SYSTEM AND APIC BUS ARBITRATION

When several local APICs and the I/O APIC are sending IPI and interrupt messages on the system bus (or APIC bus), the order in which the messages are sent and handled is determined through bus arbitration.

For the Pentium 4 and Intel Xeon processors, the local and I/O APICs use the arbitration mechanism defined for the system bus to determine the order in which IPIs are handled. This mechanism is non-architectural and cannot be controlled by software.

For the P6 family and Pentium processors, the local and I/O APICs use an APIC-based arbitration mechanism to determine the order in which IPIs are handled. Here, each local APIC is given an arbitration priority of from 0 to 15, which the I/O APIC uses during arbitration to determine which local APIC should be given access to the APIC bus. The local APIC with the highest arbitration priority always wins bus access. Upon completion of an arbitration round, the winning local APIC lowers its arbitration priority to 0 and the losing local APICs each raise theirs by 1.

The current arbitration priority for a local APIC is stored in a 4-bit, software-transparent arbitration ID (Arb ID) register. During reset, this register is initialized to the APIC ID number (stored in the local APIC ID register). The INIT level-deassert IPI, which is issued with and ICR command, can be used to resynchronize the arbitration priorities of the local APICs by resetting Arb ID register of each agent to its current APIC ID value. (The Pentium 4 and Intel Xeon processors do not implement the Arb ID register.)

Section 11.10, "APIC Bus Message Passing Mechanism and Protocol (P6 Family, Pentium Processors)," describes the APIC bus arbitration protocols and bus message formats, while Section 11.6.1, "Interrupt Command Register (ICR)," describes the INIT level de-assert IPI message.

Note that except for the SIPI IPI (see Section 11.6.1, "Interrupt Command Register (ICR)"), all bus messages that fail to be delivered to their specified destination or destinations are automatically retried. Software should avoid situations in which IPIs are sent to disabled or nonexistent local APICs, causing the messages to be resent repeatedly. Additionally, interrupt sources that target the APIC should be masked or changed to no longer target the APIC.

11.8 HANDLING INTERRUPTS

When a local APIC receives an interrupt from a local source, an interrupt message from an I/O APIC, or an IPI, the manner in which it handles the message depends on processor implementation, as described in the following sections.

11.8.1 Interrupt Handling with the Pentium 4 and Intel Xeon Processors

With the Pentium 4 and Intel Xeon processors, the local APIC handles the local interrupts, interrupt messages, and IPIs it receives as follows:

1. It determines if it is the specified destination or not (see Figure 11-16). If it is the specified destination, it accepts the message; if it is not, it discards the message.

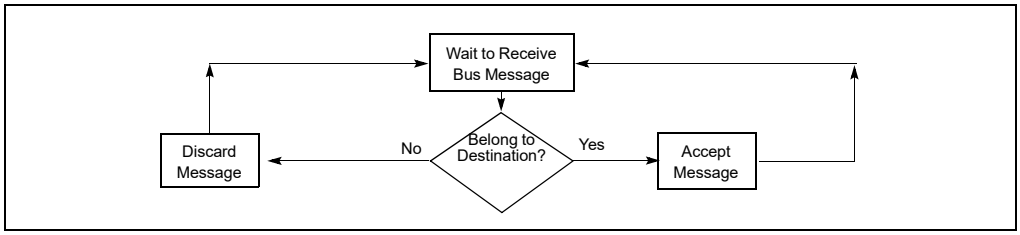

Figure 11-16. Interrupt Acceptance Flow Chart for the Local APIC (Pentium 4 and Intel Xeon Processors)

2. If the local APIC determines that it is the designated destination for the interrupt and if the interrupt request is an NMI, SMI, INIT, ExtINT, or SIPI, the interrupt is sent directly to the processor core for handling.
3. If the local APIC determines that it is the designated destination for the interrupt but the interrupt request is not one of the interrupts given in step 2, the local APIC sets the appropriate bit in the IRR.
4. When interrupts are pending in the IRR register, the local APIC dispatches them to the processor one at a time, based on their priority and the current processor priority in the PPR (see Section 11.8.3.1, "Task and Processor Priorities").
5. When a fixed interrupt has been dispatched to the processor core for handling, the completion of the handler routine is indicated with an instruction in the instruction handler code that writes to the end-of-interrupt (EOI) register in the local APIC (see Section 11.8.5, "Signaling Interrupt Servicing Completion"). The act of writing to the EOI register causes the local APIC to delete the interrupt from its ISR queue and (for level-triggered interrupts) send a message on the bus indicating that the interrupt handling has been completed. (A write to the EOI register must not be included in the handler routine for an NMI, SMI, INIT, ExtINT, or SIPI.)

11.8.2 Interrupt Handling with the P6 Family and Pentium Processors

With the P6 family and Pentium processors, the local APIC handles the local interrupts, interrupt messages, and IPIs it receives as follows (see Figure 11-17).

1. (IPIs only) The local APIC examines the IPI message to determines if it is the specified destination for the IPI as described in Section 11.6.2, "Determining IPI Destination." If it is the specified destination, it continues its acceptance procedure; if it is not the destination, it discards the IPI message. When the message specifies lowest-priority delivery mode, the local APIC will arbitrate with the other processors that were designated as recipients of the IPI message (see Section 11.6.2.4, "Lowest Priority Delivery Mode").
2. If the local APIC determines that it is the designated destination for the interrupt and if the interrupt request is an NMI, SMI, INIT, ExtINT, or INIT-deassert interrupt, or one of the MP protocol IPI messages (BIPI, FIPI, and SIPI), the interrupt is sent directly to the processor core for handling.
3. If the local APIC determines that it is the designated destination for the interrupt but the interrupt request is not one of the interrupts given in step 2, the local APIC looks for an open slot in one of its two pending interrupt queues contained in the IRR and ISR registers (see Figure 11-20). If a slot is available (see Section 11.8.4, "Interrupt Acceptance for Fixed Interrupts"), places the interrupt in the slot. If a slot is not available, it rejects the interrupt request and sends it back to the sender with a retry message.
4. When interrupts are pending in the IRR register, the local APIC dispatches them to the processor one at a time, based on their priority and the current processor priority in the PPR (see Section 11.8.3.1, "Task and Processor Priorities").
5. When a fixed interrupt has been dispatched to the processor core for handling, the completion of the handler routine is indicated with an instruction in the instruction handler code that writes to the end-of-interrupt (EOI)

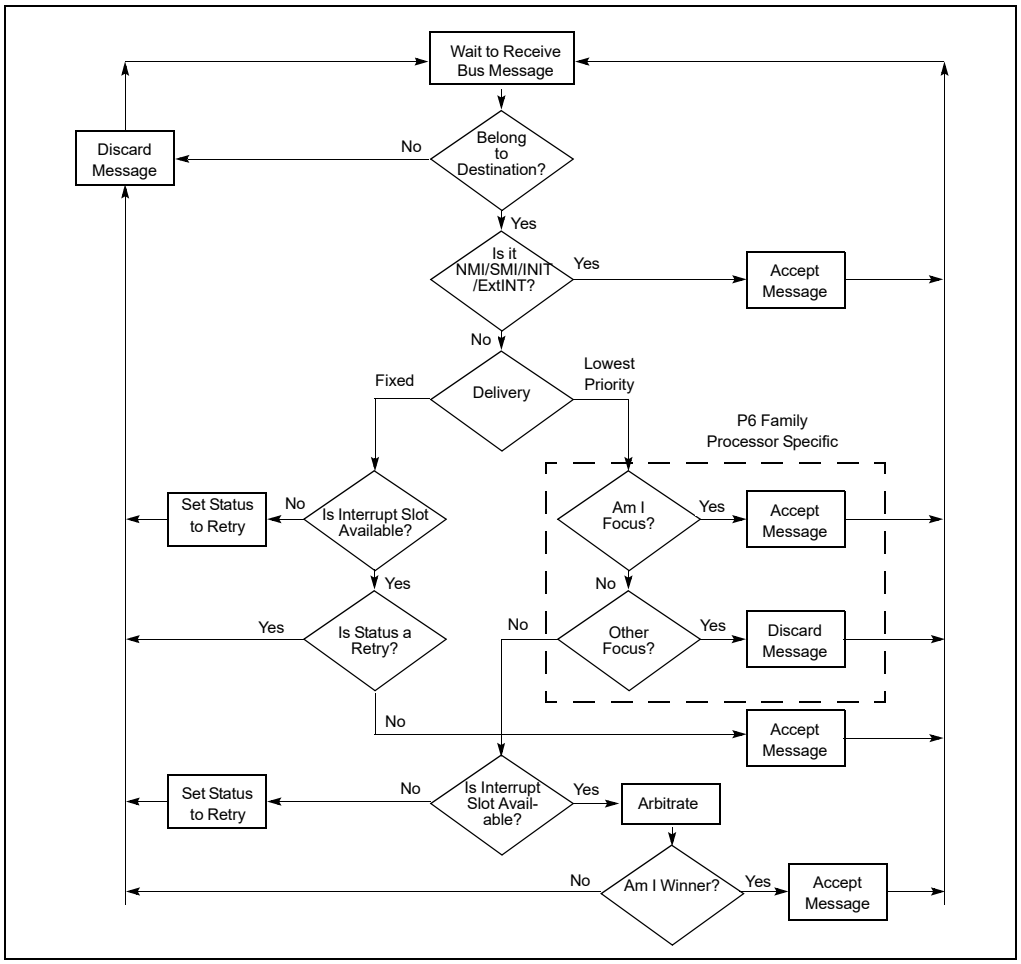

Figure 11-17. Interrupt Acceptance Flow Chart for the Local APIC (P6 Family and Pentium Processors)

register in the local APIC (see Section 11.8.5, "Signaling Interrupt Servicing Completion"). The act of writing to the EOI register causes the local APIC to delete the interrupt from its queue and (for level-triggered interrupts) send a message on the bus indicating that the interrupt handling has been completed. (A write to the EOI register must not be included in the handler routine for an NMI, SMI, INIT, ExtINT, or SIPI.)

The following sections describe the acceptance of interrupts and their handling by the local APIC and processor in greater detail.

11.8.3 Interrupt, Task, and Processor Priority

Each interrupt delivered to the processor through the local APIC has a priority based on its vector number. The local APIC uses this priority to determine when to service the interrupt relative to the other activities of the processor, including the servicing of other interrupts.

Each interrupt vector is an 8-bit value. The **interrupt-priority class** is the value of bits 7:4 of the interrupt vector. The lowest interrupt-priority class is 1 and the highest is 15; interrupts with vectors in the range 0–15 (with interrupt-priority class 0) are illegal and are never delivered. Because vectors 0–31 are reserved for dedicated uses by the Intel 64 and IA-32 architectures, software should configure interrupt vectors to use interrupt-priority classes in the range 2–15.

Each interrupt-priority class encompasses 16 vectors. The relative priority of interrupts within an interrupt-priority class is determined by the value of bits 3:0 of the vector number. The higher the value of those bits, the higher the

priority within that interrupt-priority class. Thus, each interrupt vector comprises two parts, with the high 4 bits indicating its interrupt-priority class and the low 4 bits indicating its ranking within the interrupt-priority class.

11.8.3.1 Task and Processor Priorities

The local APIC also defines a **task priority** and a **processor priority** that determine the order in which interrupts are handled. The **task-priority class** is the value of bits 7:4 of the task-priority register (TPR), which can be written by software (TPR is a read/write register); see Figure 11-18.

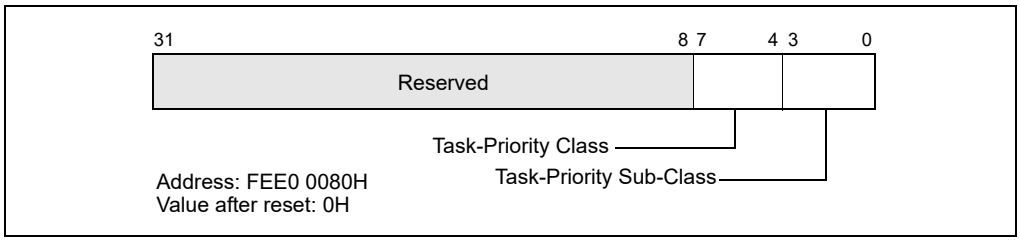

Figure 11-18. Task-Priority Register (TPR)

NOTE

In this discussion, the term "task" refers to a software defined task, process, thread, program, or routine that is dispatched to run on the processor by the operating system. It does not refer to an IA-32 architecture defined task as described in Chapter 8, "Task Management."

The task priority allows software to set a priority threshold for interrupting the processor. This mechanism enables the operating system to temporarily block low priority interrupts from disturbing high-priority work that the processor is doing. The ability to block such interrupts using task priority results from the way that the TPR controls the value of the processor-priority register (PPR).[1]

The **processor-priority class** is a value in the range 0–15 that is maintained in bits 7:4 of the processor-priority register (PPR); see Figure 11-19. The PPR is a read-only register. The processor-priority class represents the current priority at which the processor is executing.

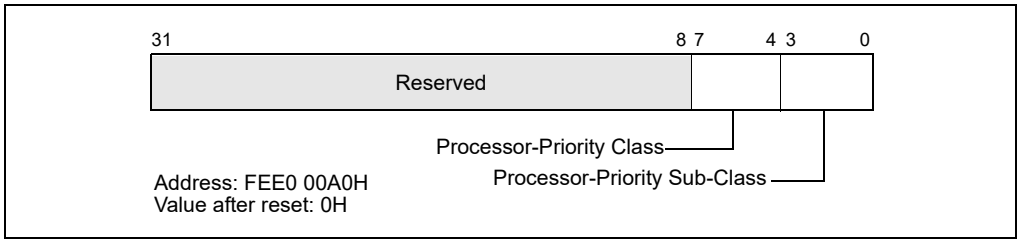

Figure 11-19. Processor-Priority Register (PPR)

The value of the PPR is based on the value of TPR and the value ISRV; ISRV is the vector number of the highest priority bit that is set in the ISR or 00H if no bit is set in the ISR. (See Section 11.8.4 for more details on the ISR.) The value of PPR is determined as follows:

- PPR[7:4] (the processor-priority class) the maximum of TPR[7:4] (the task- priority class) and ISRV[7:4] (the priority of the highest priority interrupt in service).
- PPR[3:0] (the processor-priority sub-class) is determined as follows:
  - — If TPR[7:4] > ISRV[7:4], PPR[3:0] is TPR[3:0] (the task-priority sub-class).
  - — If TPR[7:4] < ISRV[7:4], PPR[3:0] is 0.
  - — If TPR[7:4] = ISRV[7:4], PPR[3:0] may be either TPR[3:0] or 0. The actual behavior is model-specific.

1. The TPR also determines the arbitration priority of the local processor; see Section 11.6.2.4, "Lowest Priority Delivery Mode."

The processor-priority class determines the priority threshold for interrupting the processor. The processor will deliver only those interrupts that have an interrupt-priority class higher than the processor-priority class in the PPR. If the processor-priority class is 0, the PPR does not inhibit the delivery any interrupt; if it is 15, the processor inhibits the delivery of all interrupts. (The processor-priority mechanism does not affect the delivery of interrupts with the NMI, SMI, INIT, ExtINT, INIT-deassert, and start-up delivery modes.)

The processor does not use the processor-priority sub-class to determine which interrupts to deliver and which to inhibit. (The processor uses the processor-priority sub-class only to satisfy reads of the PPR.)

11.8.4 Interrupt Acceptance for Fixed Interrupts

The local APIC queues the fixed interrupts that it accepts in one of two interrupt pending registers: the interrupt request register (IRR) or in-service register (ISR). These two 256-bit read-only registers are shown in Figure 11-20. The 256 bits in these registers represent the 256 possible vectors; vectors 0 through 15 are reserved by the APIC (see also: Section 11.5.2, "Valid Interrupt Vectors").

NOTE

All interrupts with an NMI, SMI, INIT, ExtINT, start-up, or INIT-deassert delivery mode bypass the IRR and ISR registers and are sent directly to the processor core for servicing.

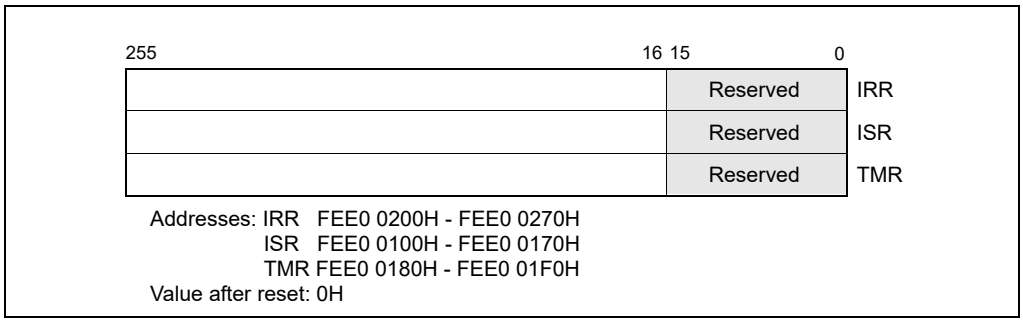

Figure 11-20. IRR, ISR, and TMR Registers

The IRR contains the active interrupt requests that have been accepted, but not yet dispatched to the processor for servicing. When the local APIC accepts an interrupt, it sets the bit in the IRR that corresponds the vector of the accepted interrupt. When the processor core is ready to handle the next interrupt, the local APIC clears the highest priority IRR bit that is set and sets the corresponding ISR bit. The vector for the highest priority bit set in the ISR is then dispatched to the processor core for servicing.

While the processor is servicing the highest priority interrupt, the local APIC can send additional fixed interrupts by setting bits in the IRR. When the interrupt service routine issues a write to the EOI register (see Section 11.8.5, "Signaling Interrupt Servicing Completion"), the local APIC responds by clearing the highest priority ISR bit that is set. It then repeats the process of clearing the highest priority bit in the IRR and setting the corresponding bit in the ISR. The processor core then begins executing the service routing for the highest priority bit set in the ISR.

If more than one interrupt is generated with the same vector number, the local APIC can set the bit for the vector both in the IRR and the ISR. This means that for the Pentium 4 and Intel Xeon processors, the IRR and ISR can queue two interrupts for each interrupt vector: one in the IRR and one in the ISR. Any additional interrupts issued for the same interrupt vector are collapsed into the single bit in the IRR.

For the P6 family and Pentium processors, the IRR and ISR registers can queue no more than two interrupts per interrupt vector and will reject other interrupts that are received within the same vector.

If the local APIC receives an interrupt with an interrupt-priority class higher than that of the interrupt currently in service, and interrupts are enabled in the processor core, the local APIC dispatches the higher priority interrupt to the processor immediately (without waiting for a write to the EOI register). The currently executing interrupt handler is then interrupted so the higher-priority interrupt can be handled. When the handling of the higher-priority interrupt has been completed, the servicing of the interrupted interrupt is resumed.

The trigger mode register (TMR) indicates the trigger mode of the interrupt (see Figure 11-20). Upon acceptance of an interrupt into the IRR, the corresponding TMR bit is cleared for edge-triggered interrupts and set for level-triggered interrupts. If a TMR bit is set when an EOI cycle for its corresponding interrupt vector is generated, an EOI message is sent to all I/O APICs.

11.8.5 Signaling Interrupt Servicing Completion

For all interrupts except those delivered with the NMI, SMI, INIT, ExtINT, the start-up, or INIT-Deassert delivery mode, the interrupt handler must include a write to the end-of-interrupt (EOI) register (see Figure 11-21). This write must occur at the end of the handler routine, sometime before the IRET instruction. This action indicates that the servicing of the current interrupt is complete and the local APIC can issue the next interrupt from the ISR.

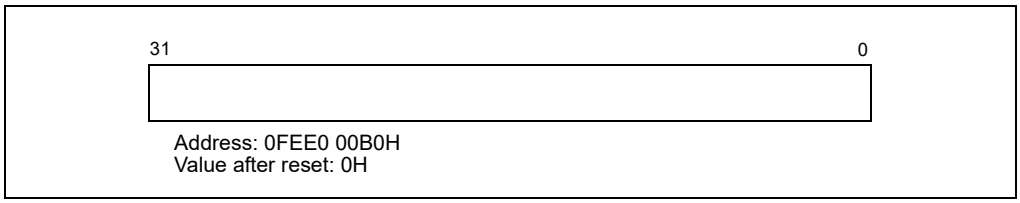

Figure 11-21. EOI Register

Upon receiving an EOI, the APIC clears the highest priority bit in the ISR and dispatches the next highest priority interrupt to the processor. If the terminated interrupt was a level-triggered interrupt, the local APIC also sends an end-of-interrupt message to all I/O APICs.

System software may prefer to direct EOIs to specific I/O APICs rather than having the local APIC send end-of-interrupt messages to all I/O APICs.

Software can inhibit the broadcast of EOI message by setting bit 12 of the Spurious Interrupt Vector Register (see Section 11.9). If this bit is set, a broadcast EOI is not generated on an EOI cycle even if the associated TMR bit indicates that the current interrupt was level-triggered. The default value for the bit is 0, indicating that EOI broadcasts are performed.

Bit 12 of the Spurious Interrupt Vector Register is reserved to 0 if the processor does not support suppression of EOI broadcasts. Support for EOI-broadcast suppression is reported in bit 24 in the Local APIC Version Register (see Section 11.4.8); the feature is supported if that bit is set to 1. When supported, the feature is available in both xAPIC mode and x2APIC mode.

System software desiring to perform directed EOIs for level-triggered interrupts should set bit 12 of the Spurious Interrupt Vector Register and follow each the EOI to the local xAPIC for a level triggered interrupt with a directed EOI to the I/O APIC generating the interrupt (this is done by writing to the I/O APIC's EOI register). System software performing directed EOIs must retain a mapping associating level-triggered interrupts with the I/O APICs in the system.

11.8.6 Task Priority in IA-32e Mode

In IA-32e mode, operating systems can manage the 16 interrupt-priority classes (see Section 11.8.3, "Interrupt, Task, and Processor Priority") explicitly using the task priority register (TPR). Operating systems can use the TPR to temporarily block specific (low-priority) interrupts from interrupting a high-priority task. This is done by loading TPR with a value in which the task-priority class corresponds to the highest interrupt-priority class that is to be blocked. For example:

- Loading the TPR with a task-priority class of 8 (01000B) blocks all interrupts with an interrupt-priority class of 8 or less while allowing all interrupts with an interrupt-priority class of 9 or more to be recognized.
- Loading the TPR with a task-priority class of 0 enables all external interrupts.
- Loading the TPR with a task-priority class of 0FH (01111B) disables all external interrupts.

The TPR (shown in Figure 11-18) is cleared to 0 on reset. In 64-bit mode, software can read and write the TPR using an alternate interface, MOV CR8 instruction. The new task-priority class is established when the MOV CR8

instruction completes execution. Software does not need to force serialization after loading the TPR using MOV CR8.

Use of the MOV CRn instruction requires a privilege level of 0. Programs running at privilege level greater than 0 cannot read or write the TPR. An attempt to do so causes a general-protection exception. The TPR is abstracted from the interrupt controller (IC), which prioritizes and manages external interrupt delivery to the processor. The IC can be an external device, such as an APIC or 8259. Typically, the IC provides a priority mechanism similar or identical to the TPR. The IC, however, is considered implementation-dependent with the under-lying priority mechanisms subject to change. CR8, by contrast, is part of the Intel 64 architecture. Software can depend on this definition remaining unchanged.

Figure 11-22 shows the layout of CR8; only the low four bits are used. The remaining 60 bits are reserved and must be written with zeros. Failure to do this causes a general-protection exception.

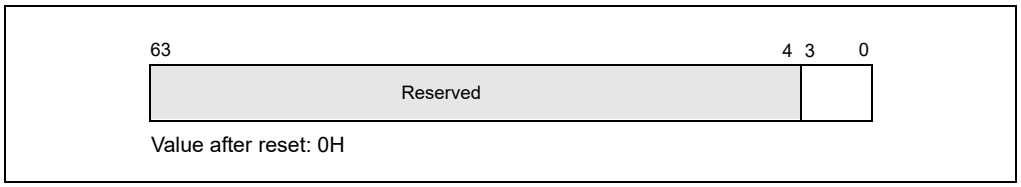

Figure 11-22. CR8 Register

11.8.6.1 Interaction of Task Priorities between CR8 and APIC

The first implementation of Intel 64 architecture includes a local advanced programmable interrupt controller (APIC) that is similar to the APIC used with previous IA-32 processors. Some aspects of the local APIC affect the operation of the architecturally defined task priority register and the programming interface using CR8.

Notable CR8 and APIC interactions are:

- The processor powers up with the local APIC enabled.
- The APIC must be enabled for CR8 to function as the TPR. Writes to CR8 are reflected into the APIC Task Priority Register.
- APIC.TPR[bits 7:4] = CR8[bits 3:0], APIC.TPR[bits 3:0] = 0. A read of CR8 returns a 64-bit value which is the value of TPR[bits 7:4], zero extended to 64 bits.

There are no ordering mechanisms between direct updates of the APIC.TPR and CR8. Operating software should implement either direct APIC TPR updates or CR8 style TPR updates but not mix them. Software can use a serializing instruction (for example, CPUID) to serialize updates between MOV CR8 and stores to the APIC.

11.9 SPURIOUS INTERRUPT

A special situation may occur when a processor raises its task priority to be greater than or equal to the level of the interrupt for which the processor INTR signal is currently being asserted. If at the time the INTA cycle is issued, the interrupt that was to be dispensed has become masked (programmed by software), the local APIC will deliver a spurious-interrupt vector. Dispensing the spurious-interrupt vector does not affect the ISR, so the handler for this vector should return without an EOI.

The vector number for the spurious-interrupt vector is specified in the spurious-interrupt vector register (see Figure 11-23). The functions of the fields in this register are as follows:

Spurious Vector Determines the vector number to be delivered to the processor when the local APIC generates a spurious vector.

(Pentium 4 and Intel Xeon processors.) Bits 0 through 7 of the this field are programmable by software.

(P6 family and Pentium processors). Bits 4 through 7 of the this field are programmable by software, and bits 0 through 3 are hardwired to logical ones. Software writes to bits 0 through 3 have no effect.

APIC Software Enable/Disable

Allows software to temporarily enable (1) or disable (0) the local APIC (see Section 11.4.3, "Enabling or Disabling the Local APIC").

Focus Processor Checking

Determines if focus processor checking is enabled (0) or disabled (1) when using the lowest-priority delivery mode. In Pentium 4 and Intel Xeon processors, this bit is reserved and should be cleared to 0.

Suppress EOI Broadcasts

Determines whether an EOI for a level-triggered interrupt causes EOI messages to be broadcast to the I/O APICs (0) or not (1). See Section 11.8.5. The default value for this bit is 0, indicating that EOI broadcasts are performed. This bit is reserved to 0 if the processor does not support EOI-broadcast suppression.

NOTE

Do not program an LVT or IOAPIC RTE with a spurious vector even if you set the mask bit. A spurious vector ISR does not do an EOI. If for some reason an interrupt is generated by an LVT or RTE entry, the bit in the in-service register will be left set for the spurious vector. This will mask all interrupts at the same or lower priority

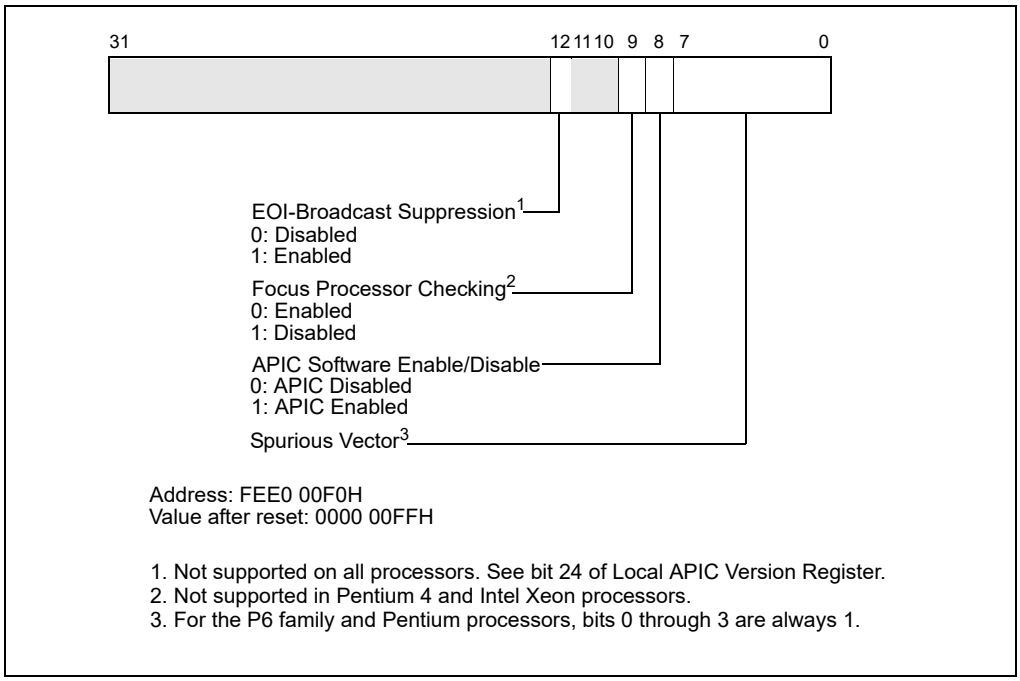

Figure 11-23. Spurious-Interrupt Vector Register (SVR)

11.10 APIC BUS MESSAGE PASSING MECHANISM AND PROTOCOL (P6 FAMILY, PENTIUM PROCESSORS)

The Pentium 4 and Intel Xeon processors pass messages among the local and I/O APICs on the system bus, using the system bus message passing mechanism and protocol.

The P6 family and Pentium processors, pass messages among the local and I/O APICs on the serial APIC bus, as follows. Because only one message can be sent at a time on the APIC bus, the I/O APIC and local APICs employ a "rotating priority" arbitration protocol to gain permission to send a message on the APIC bus. One or more APICs may start sending their messages simultaneously. At the beginning of every message, each APIC presents the type of the message it is sending and its current arbitration priority on the APIC bus. This information is used for arbitration. After each arbitration cycle (within an arbitration round), only the potential winners keep driving the bus.

By the time all arbitration cycles are completed, there will be only one APIC left driving the bus. Once a winner is selected, it is granted exclusive use of the bus, and will continue driving the bus to send its actual message.

After each successfully transmitted message, all APICs increase their arbitration priority by 1. The previous winner (that is, the one that has just successfully transmitted its message) assumes a priority of 0 (lowest). An agent whose arbitration priority was 15 (highest) during arbitration, but did not send a message, adopts the previous winner's arbitration priority, incremented by 1.

Note that the arbitration protocol described above is slightly different if one of the APICs issues a special End-Of-Interrupt (EOI). This high-priority message is granted the bus regardless of its sender's arbitration priority, unless more than one APIC issues an EOI message simultaneously. In the latter case, the APICs sending the EOI messages arbitrate using their arbitration priorities.

If the APICs are set up to use "lowest priority" arbitration (see Section 11.6.2.4, "Lowest Priority Delivery Mode") and multiple APICs are currently executing at the lowest priority (the value in the APR register), the arbitration priorities (unique values in the Arb ID register) are used to break ties. All 8 bits of the APR are used for the lowest priority arbitration.

11.10.1 Bus Message Formats

See Section 11.13, "APIC Bus Message Formats," for a description of bus message formats used to transmit messages on the serial APIC bus.

11.11 MESSAGE SIGNALLED INTERRUPTS

The *PCI Local Bus Specification, Rev 2.2* (www.pcisig.com) introduces the concept of message signalled interrupts. As the specification indicates:

> "Message signalled interrupts (MSI) is an optional feature that enables PCI devices to request service by writing a system-specified message to a system-specified address (PCI DWORD memory write transaction). The transaction address specifies the message destination while the transaction data specifies the message. System software is expected to initialize the message destination and message during device configuration, allocating one or more non-shared messages to each MSI capable function."

The capabilities mechanism provided by the *PCI Local Bus Specification* is used to identify and configure MSI capable PCI devices. Among other fields, this structure contains a Message Data Register and a Message Address Register. To request service, the PCI device function writes the contents of the Message Data Register to the address contained in the Message Address Register (and the Message Upper Address register for 64-bit message addresses).

Section 11.11.1 and Section 11.11.2 provide layout details for the Message Address Register and the Message Data Register. The operation issued by the device is a PCI write command to the Message Address Register with the Message Data Register contents. The operation follows semantic rules as defined for PCI write operations and is a DWORD operation.

11.11.1 Message Address Register Format

The format of the Message Address Register (lower 32-bits) is shown in Figure 11-24.

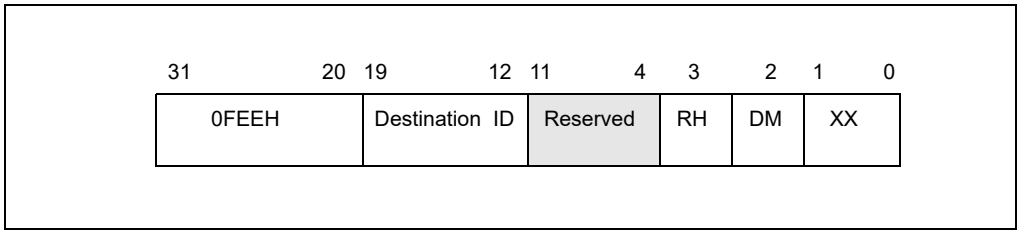

Figure 11-24. Layout of the MSI Message Address Register

Fields in the Message Address Register are as follows:

1. **Bits 31-20** — These bits contain a fixed value for interrupt messages (0FEEH). This value locates interrupts at the 1-MByte area with a base address of 4G – 18M. All accesses to this region are directed as interrupt messages. Care must to be taken to ensure that no other device claims the region as I/O space.
2. **Destination ID** — This field contains an 8-bit destination ID. It identifies the message's target processor(s). The destination ID corresponds to bits 63:56 of the I/O APIC Redirection Table Entry if the IOAPIC is used to dispatch the interrupt to the processor(s).
3. **Redirection hint indication** (RH) — When this bit is set, the message is directed to the processor with the lowest interrupt priority among processors that can receive the interrupt.
    - When RH is 0, the interrupt is directed to the processor listed in the Destination ID field.
    - When RH is 1 and the physical destination mode is used, the Destination ID field must not be set to FFH; it must point to a processor that is present and enabled to receive the interrupt.
    - When RH is 1 and the logical destination mode is active in a system using a flat addressing model, the Destination ID field must be set so that bits set to 1 identify processors that are present and enabled to receive the interrupt.
    - If RH is set to 1 and the logical destination mode is active in a system using cluster addressing model, then Destination ID field must not be set to FFH; the processors identified with this field must be present and enabled to receive the interrupt.
4. **Destination mode (DM)** — This bit indicates whether the Destination ID field should be interpreted as logical or physical APIC ID for delivery of the lowest priority interrupt.
    - If RH is 1 and DM is 0, the Destination ID field is in physical destination mode and only the processor in the system that has the matching APIC ID is considered for delivery of that interrupt (this means no re-direction).
    - If RH is 1 and DM is 1, the Destination ID Field is interpreted as in logical destination mode and the redirection is limited to only those processors that are part of the logical group of processors based on the processor's logical APIC ID and the Destination ID field in the message. The logical group of processors consists of those identified by matching the 8-bit Destination ID with the logical destination identified by the Destination Format Register and the Logical Destination Register in each local APIC. The details are similar to those described in Section 11.6.2, "Determining IPI Destination."
    - If RH is 0, then the DM bit is ignored and the message is sent ahead independent of whether the physical or logical destination mode is used.

11.11.2 Message Data Register Format

The layout of the Message Data Register is shown in Figure 11-25.

Reserved fields are not assumed to be any value. Software must preserve their contents on writes. Other fields in the Message Data Register are described below.

1. **Vector** — This 8-bit field contains the interrupt vector associated with the message. Values range from 010H to 0FEH. Software must guarantee that the field is not programmed with vector 00H to 0FH.
2. **Delivery Mode** — This 3-bit field specifies how the interrupt receipt is handled. Delivery Modes operate only in conjunction with specified Trigger Modes. Correct Trigger Modes must be guaranteed by software. Restrictions are indicated below:
    a. **000B (Fixed Mode)** — Deliver the signal to all the agents listed in the destination. The Trigger Mode for fixed delivery mode can be edge or level.
    b. **001B (Lowest Priority)** — Deliver the signal to the agent that is executing at the lowest priority of all agents listed in the destination field. The trigger mode can be edge or level.
    c. **010B (System Management Interrupt or SMI)** — The delivery mode is edge only. For systems that rely on SMI semantics, the vector field is ignored but must be programmed to all zeroes for future compatibility.

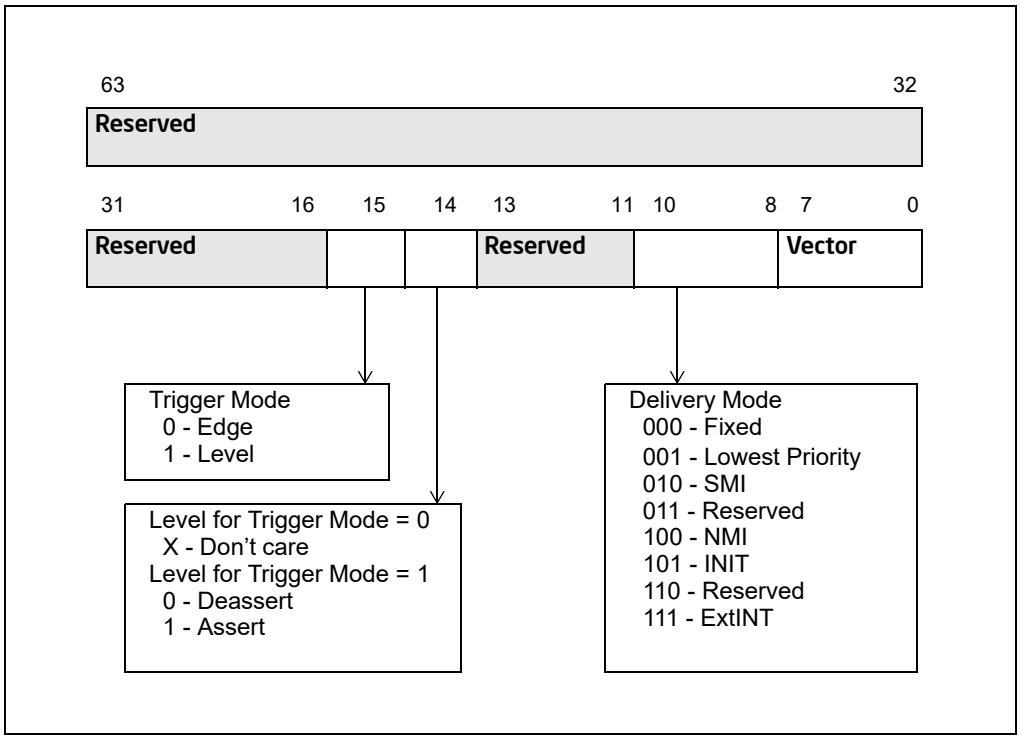

Figure 11-25. Layout of the MSI Message Data Register

d. **100B (NMI)** — Deliver the signal to all the agents listed in the destination field. The vector information is ignored. NMI is an edge triggered interrupt regardless of the Trigger Mode Setting.

e. **101B (INIT)** — Deliver this signal to all the agents listed in the destination field. The vector information is ignored. INIT is an edge triggered interrupt regardless of the Trigger Mode Setting.

f. **111B (ExtINT)** — Deliver the signal to the INTR signal of all agents in the destination field (as an interrupt that originated from an 8259A compatible interrupt controller). The vector is supplied by the INTA cycle issued by the activation of the ExtINT. ExtINT is an edge triggered interrupt.

3. **Level** — Edge triggered interrupt messages are always interpreted as assert messages. For edge triggered interrupts this field is not used. For level triggered interrupts, this bit reflects the state of the interrupt input.

4. **Trigger Mode** — This field indicates the signal type that will trigger a message.

   a. **0** — Indicates edge sensitive.

   b. **1** — Indicates level sensitive.

11.12 EXTENDED XAPIC (X2APIC)

The x2APIC architecture extends the xAPIC architecture (described in Section 11.4) in a backward compatible manner and provides forward extendability for future Intel platform innovations. Specifically, the x2APIC architecture does the following.

- Retains all key elements of compatibility to the xAPIC architecture.
  - — Delivery modes.
  - — Interrupt and processor priorities.
  - — Interrupt sources.
  - — Interrupt destination types.
- Provides extensions to scale processor addressability for both the logical and physical destination modes.

- Adds new features to enhance performance of interrupt delivery.
- Reduces complexity of logical destination mode interrupt delivery on link based platform architectures.
- Uses MSR programming interface to access APIC registers in x2APIC mode instead of memory-mapped interfaces. Memory-mapped interface is supported when operating in xAPIC mode.

11.12.1 Detecting and Enabling x2APIC Mode

Processor support for x2APIC mode can be detected by executing CPUID with EAX=1 and then checking ECX, bit 21 ECX. If CPUID.(EAX=1):ECX.21 is set , the processor supports the x2APIC capability and can be placed into the x2APIC mode.

System software can place the local APIC in the x2APIC mode by setting the x2APIC mode enable bit (bit 10) in the IA32_APIC_BASE MSR at MSR address 01BH. The layout for the IA32_APIC_BASE MSR is shown in Figure 11-26.

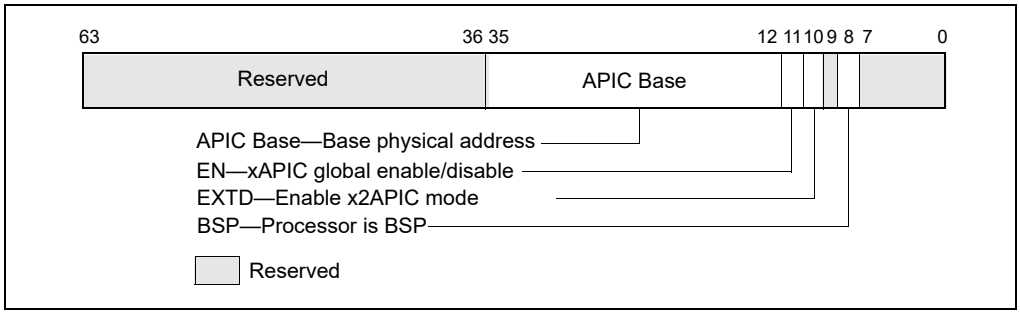

Figure 11-26. IA32_APIC_BASE MSR Supporting x2APIC

Table 11-5, "x2APIC operating mode configurations" describe the possible combinations of the enable bit (EN - bit 11) and the extended mode bit (EXTD - bit 10) in the IA32_APIC_BASE MSR.

Table 11-5. x2APIC Operating Mode Configurations

xAPIC global enable (IA32_APIC_BASE[11])	x2APIC enable (IA32_APIC_BASE[10])	Description
0	0	local APIC is disabled
0	1	Invalid
1	0	local APIC is enabled in xAPIC mode
1	1	local APIC is enabled in x2APIC mode

Once the local APIC has been switched to x2APIC mode (EN = 1, EXTD = 1), switching back to xAPIC mode would require system software to disable the local APIC unit. Specifically, attempting to write a value to the IA32_APIC_BASE MSR that has (EN= 1, EXTD = 0) when the local APIC is enabled and in x2APIC mode causes a general-protection exception. Once bit 10 in IA32_APIC_BASE MSR is set, the only way to leave x2APIC mode using IA32_APIC_BASE would require a WRMSR to set both bit 11 and bit 10 to zero. Section 11.12.5, "x2APIC State Transitions" provides a detailed state diagram for the state transitions allowed for the local APIC.

11.12.1.1 Instructions to Access APIC Registers

In x2APIC mode, system software uses RDMSR and WRMSR to access the APIC registers. The MSR addresses for accessing the x2APIC registers are architecturally defined and specified in Section 11.12.1.2, "x2APIC Register Address Space". Executing the RDMSR instruction with the APIC register address specified in ECX returns the content of bits 0 through 31 of the APIC registers in EAX. Bits 32 through 63 are returned in register EDX - these bits are reserved if the APIC register being read is a 32-bit register. Similarly executing the WRMSR instruction with the APIC register address in ECX, writes bits 0 to 31 of register EAX to bits 0 to 31 of the specified APIC register. If the register is a 64-bit register then bits 0 to 31 of register EDX are written to bits 32 to 63 of the APIC register. The

Interrupt Command Register is the only APIC register that is implemented as a 64-bit MSR. The semantics of handling reserved bits are defined in Section 11.12.1.3, "Reserved Bit Checking".

11.12.1.2 x2APIC Register Address Space

The MSR address range 800H through 8FFH is architecturally reserved and dedicated for accessing APIC registers in x2APIC mode. Table 11-6 lists the APIC registers that are available in x2APIC mode. When appropriate, the table also gives the offset at which each register is available on the page referenced by IA32_APIC_BASE[35:12] in xAPIC mode.

There is a one-to-one mapping between the x2APIC MSRs and the legacy xAPIC register offsets with the following exceptions:

- The Destination Format Register (DFR): The DFR, supported at offset 0E0H in xAPIC mode, is not supported in x2APIC mode. There is no MSR with address 80EH.
- The Interrupt Command Register (ICR): The two 32-bit registers in xAPIC mode (at offsets 300H and 310H) are merged into a single 64-bit MSR in x2APIC mode (with MSR address 830H). There is no MSR with address 831H.
- The SELF IPI register. This register is available only in x2APIC mode at address 83FH. In xAPIC mode, there is no register defined at offset 3F0H.

MSR addresses in the range 800H–8FFH that are not listed in Table 11-6 (including 80EH and 831H) are reserved. Executions of RDMSR and WRMSR that attempt to access such addresses cause general-protection exceptions.

The MSR address space is compressed to allow for future growth. Every 32 bit register on a 128-bit boundary in the legacy MMIO space is mapped to a single MSR in the local x2APIC MSR address space. The upper 32-bits of all x2APIC MSRs (except for the ICR) are reserved.

Table 11-6. Local APIC Register Address Map Supported by x2APIC

MSR Address (x2APIC mode)	MMIO Offset (xAPIC mode)	Register Name	MSR R/W Semantics	Comments
802H	020H	Local APIC ID register	Read-only[1]	See Section 11.12.5.1 for initial values.
803H	030H	Local APIC Version register	Read-only	Same version used in xAPIC mode and x2APIC mode.
808H	080H	Task Priority Register (TPR)	Read/write	Bits 31:8 are reserved.[2]
80AH	0A0H	Processor Priority Register (PPR)	Read-only	
80BH	0B0H	EOI register	Write-only[3]	WRMSR of a non-zero value causes #GP(0).
80DH	0D0H	Logical Destination Register (LDR)	Read-only	Read/write in xAPIC mode.
80FH	0F0H	Spurious Interrupt Vector Register (SVR)	Read/write	See Section 11.9 for reserved bits.
810H	100H	In-Service Register (ISR); bits 31:0	Read-only	
811H	110H	ISR bits 63:32	Read-only	
812H	120H	ISR bits 95:64	Read-only	
813H	130H	ISR bits 127:96	Read-only	
814H	140H	ISR bits 159:128	Read-only	
815H	150H	ISR bits 191:160	Read-only	
816H	160H	ISR bits 223:192	Read-only	

Table 11-6. Local APIC Register Address Map Supported by x2APIC (Contd.)

MSR Address (x2APIC mode)	MMIO Offset (xAPIC mode)	Register Name	MSR R/W Semantics	Comments
817H	170H	ISR bits 255:224	Read-only	
818H	180H	Trigger Mode Register (TMR); bits 31:0	Read-only	
819H	190H	TMR bits 63:32	Read-only	
81AH	1A0H	TMR bits 95:64	Read-only	
81BH	1B0H	TMR bits 127:96	Read-only	
81CH	1C0H	TMR bits 159:128	Read-only	
81DH	1D0H	TMR bits 191:160	Read-only	
81EH	1E0H	TMR bits 223:192	Read-only	
81FH	1F0H	TMR bits 255:224	Read-only	
820H	200H	Interrupt Request Register (IRR); bits 31:0	Read-only	
821H	210H	IRR bits 63:32	Read-only	
822H	220H	IRR bits 95:64	Read-only	
823H	230H	IRR bits 127:96	Read-only	
824H	240H	IRR bits 159:128	Read-only	
825H	250H	IRR bits 191:160	Read-only	
826H	260H	IRR bits 223:192	Read-only	
827H	270H	IRR bits 255:224	Read-only	
828H	280H	Error Status Register (ESR)	Read/write	WRMSR of a non-zero value causes #GP(0). See Section 11.5.3.
82FH	2F0H	LVT CMCI register	Read/write	See Figure 11-8 for reserved bits.
830H[4]	300H and 310H	Interrupt Command Register (ICR)	Read/write	See Figure 11-28 for reserved bits
832H	320H	LVT Timer register	Read/write	See Figure 11-8 for reserved bits.
833H	330H	LVT Thermal Sensor register	Read/write	See Figure 11-8 for reserved bits.
834H	340H	LVT Performance Monitoring register	Read/write	See Figure 11-8 for reserved bits.
835H	350H	LVT LINT0 register	Read/write	See Figure 11-8 for reserved bits.
836H	360H	LVT LINT1 register	Read/write	See Figure 11-8 for reserved bits.
837H	370H	LVT Error register	Read/write	See Figure 11-8 for reserved bits.
838H	380H	Initial Count register (for Timer)	Read/write	
839H	390H	Current Count register (for Timer)	Read-only	
83EH	3E0H	Divide Configuration Register (DCR; for Timer)	Read/write	See Figure 11-10 for reserved bits.
83FH	Not available	SELF IPI[5]	Write-only	Available only in x2APIC mode.

NOTES:

1. WRMSR causes #GP(0) for read-only registers.

2. WRMSR causes #GP(0) for attempts to set a reserved bit to 1 in a read/write register (including bits 63:32 of each register).
3. RDMSR causes #GP(0) for write-only registers.
4. MSR 831H is reserved; read/write operations cause general-protection exceptions. The contents of the APIC register at MMIO offset 310H are accessible in x2APIC mode through the MSR at address 830H.
5. SELF IPI register is supported only in x2APIC mode.

11.12.1.3 Reserved Bit Checking

Section 11.12.1.2 and Table 11-6 specifies the reserved bit definitions for the APIC registers in x2APIC mode. Non-zero writes (by WRMSR instruction) to reserved bits to these registers will raise a general protection fault exception while reads return zeros (RsvdZ semantics).

In x2APIC mode, the local APIC ID register is increased to 32 bits wide. This enables $2^{32}-1$ processors to be addressable in physical destination mode. This 32-bit value is referred to as "x2APIC ID". A processor implementation may choose to support less than 32 bits in its hardware. System software should be agnostic to the actual number of bits that are implemented. All non-implemented bits will return zeros on reads by software.

The APIC ID value of FFFF_FFFFH and the highest value corresponding to the implemented bit-width of the local APIC ID register in the system are reserved and cannot be assigned to any logical processor.

In x2APIC mode, the local APIC ID register is a read-only register to system software and will be initialized by hardware. It is accessed via the RDMSR instruction reading the MSR at address 0802H.

Each logical processor in the system (including clusters with a communication fabric) must be configured with an unique x2APIC ID to avoid collisions of x2APIC IDs. On DP and high-end MP processors targeted to specific market segments and depending on the system configuration, it is possible that logical processors in different and "unconnected" clusters power up initialized with overlapping x2APIC IDs. In these configurations, a model-specific means may be provided in those product segments to enable BIOS and/or platform firmware to re-configure the x2APIC IDs in some clusters to provide for unique and non-overlapping system wide IDs before configuring the disconnected components into a single system.

11.12.2 x2APIC Register Availability

The local APIC registers can be accessed via the MSR interface only when the local APIC has been switched to the x2APIC mode as described in Section 11.12.1. Accessing any APIC register in the MSR address range 0800H through 08FFH via RDMSR or WRMSR when the local APIC is not in x2APIC mode causes a general-protection exception. In x2APIC mode, the memory mapped interface is not available and any access to the MMIO interface will behave similar to that of a legacy xAPIC in globally disabled state. Table 11-7 provides the interactions between the legacy & extended modes and the legacy and register interfaces.

Table 11-7. MSR/MMIO Interface of a Local x2APIC in Different Modes of Operation

	MMIO Interface	MSR Interface
xAPIC mode	Available	General-protection exception
x2APIC mode	Behavior identical to xAPIC in globally disabled state	Available

11.12.3 MSR Access in x2APIC Mode

To allow for efficient access to the APIC registers in x2APIC mode, the serializing semantics of WRMSR are relaxed when writing to the APIC registers. Thus, system software should not use "WRMSR to APIC registers in x2APIC mode" as a serializing instruction. Read and write accesses to the APIC registers will occur in program order. A WRMSR to an APIC register may complete before all preceding stores are globally visible; software can prevent this by inserting a serializing instruction or the sequence MFENCE;LFENCE before the WRMSR.

The RDMSR instruction is not serializing and this behavior is unchanged when reading APIC registers in x2APIC mode. System software accessing the APIC registers using the RDMSR instruction should not expect a serializing behavior. (Note: The MMIO-based xAPIC interface is mapped by system software as an un-cached region. Consequently, read/writes to the xAPIC-MMIO interface have serializing semantics in the xAPIC mode.)

11.12.4 VM-Exit Controls for MSRs and x2APIC Registers

The VMX architecture allows a VMM to specify lists of MSRs to be loaded or stored on VMX transitions using the VMX-transition MSR areas (see VM-exit MSR-store address field, VM-exit MSR-load address field, and VM-entry MSR-load address field in *Intel® 64 and IA-32 Architectures Software Developer's Manual, Volume 3C*).

The X2APIC MSRs cannot to be loaded and stored on VMX transitions. A VMX transition fails if the VMM has specified that the transition should access any MSRs in the address range from 0000_0800H to 0000_08FFH (the range used for accessing the X2APIC registers). Specifically, processing of an 128-bit entry in any of the VMX-transition MSR areas fails if bits 31:0 of that entry (represented as ENTRY_LOW_DW) satisfies the expression: "ENTRY_LOW_DW & FFFFF800H = 00000800H". Such a failure causes an associated VM entry to fail (by reloading host state) and causes an associated VM exit to lead to VMX abort.

11.12.5 x2APIC State Transitions

This section provides a detailed description of the x2APIC states of a local x2APIC unit, transitions between these states as well as interactions of these states with INIT and reset.

11.12.5.1 x2APIC States

The valid states for a local x2APIC unit are listed in Table 11-5.

- APIC disabled: IA32_APIC_BASE[EN]=0 and IA32_APIC_BASE[EXTD]=0.
- xAPIC mode: IA32_APIC_BASE[EN]=1 and IA32_APIC_BASE[EXTD]=0.
- x2APIC mode: IA32_APIC_BASE[EN]=1 and IA32_APIC_BASE[EXTD]=1.
- Invalid: IA32_APIC_BASE[EN]=0 and IA32_APIC_BASE[EXTD]=1.

The state corresponding to EXTD=1 and EN=0 is not valid and it is not possible to get into this state. An execution of WRMSR to the IA32_APIC_BASE_MSR that attempts a transition from a valid state to this invalid state causes a general-protection exception. Figure 11-27 shows the comprehensive state transition diagram for a local x2APIC unit.

On coming out of reset, the local APIC unit is enabled and is in the xAPIC mode: IA32_APIC_BASE[EN]=1 and IA32_APIC_BASE[EXTD]=0. The APIC registers are initialized as follows.

- The local APIC ID is initialized by hardware with a 32 bit ID (x2APIC ID). The lowest 8 bits of the x2APIC ID are the legacy local xAPIC ID, and are stored in the upper 8 bits of the APIC register for access in xAPIC mode.
- The following APIC registers are reset to all zeros for those fields that are defined in the xAPIC mode.
  - IRR, ISR, TMR, ICR, LDR, TPR, Divide Configuration Register (See Section 11.4 through Section 11.6 for details of individual APIC registers).
  - Timer initial count and timer current count registers.
- The LVT registers are reset to 0s except for the mask bits; these are set to 1s.
- The local APIC version register is not affected.
- The Spurious Interrupt Vector Register is initialized to 000000FFH.
- The DFR (available only in xAPIC mode) is reset to all 1s.
- SELF IPI register is reset to zero.

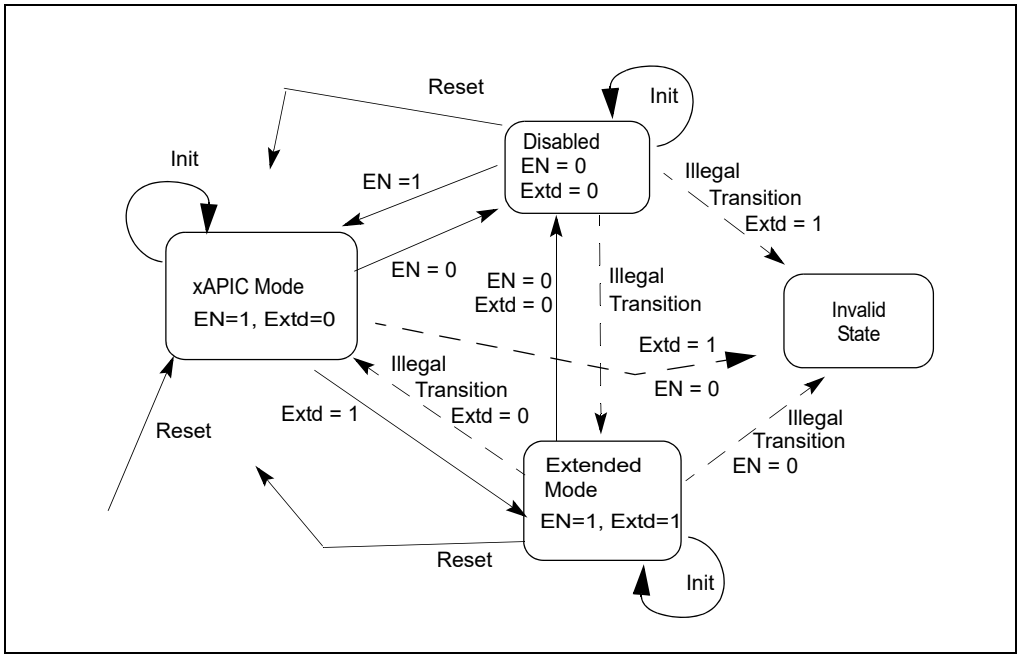

Figure 11-27. Local x2APIC State Transitions with IA32_APIC_BASE, INIT, and Reset

x2APIC After Reset

The valid transitions from the xAPIC mode state are:

- to the x2APIC mode by setting EXT to 1 (resulting EN=1, EXTD= 1). The physical x2APIC ID (see Figure 11-6) is preserved across this transition and the logical x2APIC ID (see Figure 11-29) is initialized by hardware during this transition as documented in Section 11.12.10.2. The state of the extended fields in other APIC registers, which was not initialized at reset, is not architecturally defined across this transition and system software should explicitly initialize those programmable APIC registers.
- to the disabled state by setting EN to 0 (resulting EN=0, EXTD= 0).

The result of an INIT in the xAPIC state places the APIC in the state with EN= 1, EXTD= 0. The state of the local APIC ID register is preserved (the 8-bit xAPIC ID is in the upper 8 bits of the APIC ID register). All the other APIC registers are initialized as a result of INIT.

A reset in this state places the APIC in the state with EN= 1, EXTD= 0. The state of the local APIC ID register is initialized as described in Section 11.12.5.1. All the other APIC registers are initialized described in Section 11.12.5.1.

x2APIC Transitions From x2APIC Mode

From the x2APIC mode, the only valid x2APIC transition using IA32_APIC_BASE is to the state where the x2APIC is disabled by setting EN to 0 and EXTD to 0. The x2APIC ID (32 bits) and the legacy local xAPIC ID (8 bits) are preserved across this transition. A transition from the x2APIC mode to xAPIC mode is not valid, and the corresponding WRMSR to the IA32_APIC_BASE MSR causes a general-protection exception.

A reset in this state places the x2APIC in xAPIC mode. All APIC registers (including the local APIC ID register) are initialized as described in Section 11.12.5.1.

An INIT in this state keeps the x2APIC in the x2APIC mode. The state of the local APIC ID register is preserved (all 32 bits). However, all the other APIC registers are initialized as a result of the INIT transition.

x2APIC Transitions From Disabled Mode

From the disabled state, the only valid x2APIC transition using IA32_APIC_BASE is to the xAPIC mode (EN= 1, EXTD = 0). Thus the only means to transition from x2APIC mode to xAPIC mode is a two-step process:

- first transition from x2APIC mode to local APIC disabled mode (EN= 0, EXTD = 0),
- followed by another transition from disabled mode to xAPIC mode (EN= 1, EXTD= 0).

Consequently, all the APIC register states in the x2APIC, except for the x2APIC ID (32 bits), are not preserved across mode transitions.

A reset in the disabled state places the x2APIC in the xAPIC mode. All APIC registers (including the local APIC ID register) are initialized as described in Section 11.12.5.1.

An INIT in the disabled state keeps the x2APIC in the disabled state.

State Changes From xAPIC Mode to x2APIC Mode

After APIC register states have been initialized by software in xAPIC mode, a transition from xAPIC mode to x2APIC mode does not affect most of the APIC register states, except the following:

- The Logical Destination Register is not preserved.
- Any APIC ID value written to the memory-mapped local APIC ID register is not preserved.
- The high half of the Interrupt Command Register is not preserved.

11.12.6 Routing of Device Interrupts in x2APIC Mode

The x2APIC architecture is intended to work with all existing IOxAPIC units as well as all PCI and PCI Express (PCIe) devices that support the capability for message-signaled interrupts (MSI). Support for x2APIC modifies only the following:

- the local APIC units;
- the interconnects joining IOxAPIC units to the local APIC units; and
- the interconnects joining MSI-capable PCI and PCIe devices to the local APIC units.

No modifications are required to MSI-capable PCI and PCIe devices. Similarly, no modifications are required to IOxAPIC units. This made possible through use of the interrupt-remapping architecture specified in the *Intel® Virtualization Technology for Directed I/O*, Revision 1.3 for the routing of interrupts from MSI-capable devices to local APIC units operating in x2APIC mode.

11.12.7 Initialization by System Software

Routing of device interrupts to local APIC units operating in x2APIC mode requires use of the interrupt-remapping architecture specified in the *Intel® Virtualization Technology for Directed I/O* (Revision 1.3 and/or later versions). Because of this, BIOS must enumerate support for and software must enable this interrupt remapping with Extended Interrupt Mode Enabled before it enabling x2APIC mode in the local APIC units.

The ACPI interfaces for the x2APIC are described in Section 5.2, "ACPI System Description Tables," of the *Advanced Configuration and Power Interface Specification*, Revision 4.0a (http://www.acpi.info/spec.htm). The default behavior for BIOS is to pass the control to the operating system with the local x2APICs in xAPIC mode if all APIC IDs reported by CPUID.0BH:EDX are less than 255, and in x2APIC mode if there are any logical processor reporting an APIC ID of 255 or greater.

11.12.8 CPUID Extensions And Topology Enumeration

For Intel 64 and IA-32 processors that support x2APIC, a value of 1 reported by CPUID.01H:ECX[21] indicates that the processor supports x2APIC and the extended topology enumeration leaf (CPUID.0BH).

The extended topology enumeration leaf can be accessed by executing CPUID with EAX = 0BH. Processors that do not support x2APIC may support CPUID leaf 0BH. Software can detect the availability of the extended topology enumeration leaf (0BH) by performing two steps:

- Check maximum input value for basic CPUID information by executing CPUID with EAX= 0. If CPUID.0H:EAX is greater than or equal or 11 (0BH), then proceed to next step
- Check CPUID.EAX=0BH, ECX=0H:EBX is non-zero.

If both of the above conditions are true, extended topology enumeration leaf is available. If available, the extended topology enumeration leaf is the preferred mechanism for enumerating topology. The presence of CPUID leaf 0BH in a processor does not guarantee support for x2APIC. If CPUID.EAX=0BH, ECX=0H:EBX returns zero and maximum input value for basic CPUID information is greater than 0BH, then CPUID.0BH leaf is not supported on that processor.

The extended topology enumeration leaf is intended to assist software with enumerating processor topology on systems that requires 32-bit x2APIC IDs to address individual logical processors. Details of CPUID leaf 0BH can be found in the reference pages of CPUID in Chapter 3 of *Intel® 64 and IA-32 Architectures Software Developer's Manual, Volume 2A*.

Processor topology enumeration algorithm for processors supporting the extended topology enumeration leaf of CPUID and processors that do not support CPUID leaf 0BH are treated in Section 9.9.4, "Algorithm for Three-Level Mappings of APIC_ID".

11.12.8.1 Consistency of APIC IDs and CPUID

The consistency of physical x2APIC ID in MSR 802H in x2APIC mode and the 32-bit value returned in CPUID.0BH:EDX is facilitated by processor hardware.

CPUID.0BH:EDX will report the full 32 bit ID, in xAPIC and x2APIC mode. This allows BIOS to determine if a system has processors with IDs exceeding the 8-bit initial APIC ID limit (CPUID.01H:EBX[31:24]). Initial APIC ID (CPUID.01H:EBX[31:24]) is always equal to CPUID.0BH:EDX[7:0].

If the values of CPUID.0BH:EDX reported by all logical processors in a system are less than 255, BIOS can transfer control to OS in xAPIC mode.

If the values of CPUID.0BH:EDX reported by some logical processors in a system are greater than or equal to 255, BIOS must support two options to hand off to OS.

- If BIOS enables logical processors with x2APIC IDs greater than 255, then it should enable x2APIC in the Boot Strap Processor (BSP) and all Application Processors (AP) before passing control to the OS. Applications requiring processor topology information must use OS provided services based on x2APIC IDs or CPUID.0BH leaf.
- If a BIOS transfers control to OS in xAPIC mode, then the BIOS must ensure that only logical processors with CPUID.0BH.EDX value less than 255 are enabled. BIOS initialization on all logical processors with CPUID.0B.EDX values greater than or equal to 255 must (a) disable APIC and execute CLI in each logical processor, and (b) leave these logical processor in the lowest power state so that these processors do not respond to INIT IPI during OS boot. The BSP and all the enabled logical processor operate in xAPIC mode after BIOS passed control to OS. Application requiring processor topology information can use OS provided legacy services based on 8-bit initial APIC IDs or legacy topology information from CPUID.01H and CPUID 04H leaves. Even if the BIOS passes control in xAPIC mode, an OS can switch the processors to x2APIC mode later. BIOS SMM handler should always read the APIC_BASE_MSR, determine the APIC mode and use the corresponding access method.

11.12.9 ICR Operation in x2APIC Mode

In x2APIC mode, the layout of the Interrupt Command Register is shown in Figure 11-12. The lower 32 bits of ICR in x2APIC mode is identical to the lower half of the ICR in xAPIC mode, except the Delivery Status bit is removed since it is not needed in x2APIC mode. The destination ID field is expanded to 32 bits in x2APIC mode.

To send an IPI using the ICR, software must set up the ICR to indicate the type of IPI message to be sent and the destination processor or processors. Self IPIs can also be sent using the SELF IPI register (see Section 11.12.11).

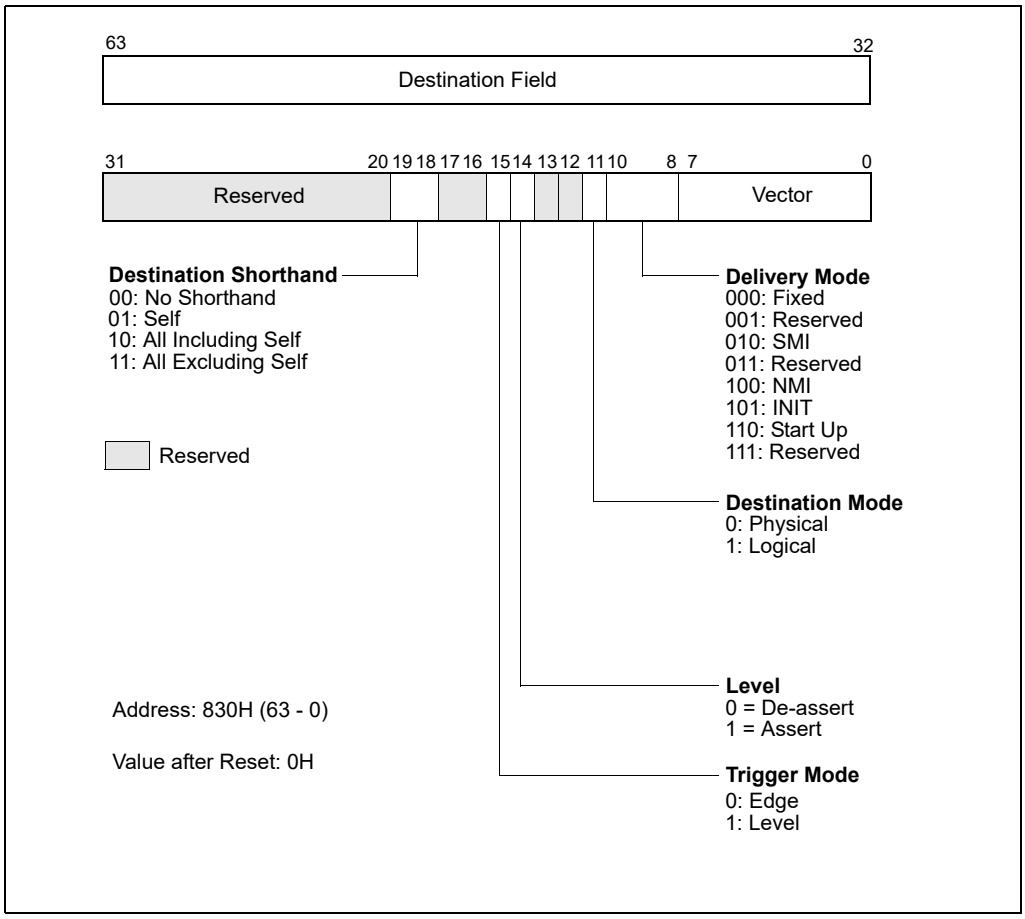

Figure 11-28. Interrupt Command Register (ICR) in x2APIC Mode

A single MSR write to the Interrupt Command Register is required for dispatching an interrupt in x2APIC mode. With the removal of the Delivery Status bit, system software no longer has a reason to read the ICR. It remains readable only to aid in debugging; however, software should not assume the value returned by reading the ICR is the last written value.

A destination ID value of FFFF_FFFFH is used for broadcast of interrupts in both logical destination and physical destination modes.

11.12.10 Determining IPI Destination in x2APIC Mode

11.12.10.1 Logical Destination Mode in x2APIC Mode

In x2APIC mode, the Logical Destination Register (LDR) is increased to 32 bits wide. It is a read-only register to system software. This 32-bit value is referred to as "logical x2APIC ID". System software accesses this register via the RDMSR instruction reading the MSR at address 80DH. Figure 11-29 provides the layout of the Logical Destination Register in x2APIC mode.

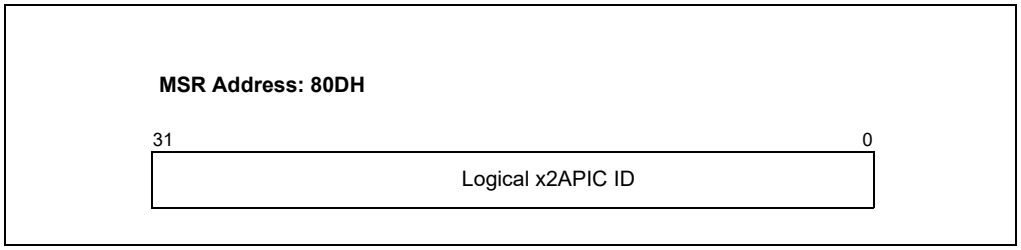

Figure 11-29. Logical Destination Register in x2APIC Mode

In the xAPIC mode, the Destination Format Register (DFR) through the MMIO interface determines the choice of a flat logical mode or a clustered logical mode. Flat logical mode is not supported in the x2APIC mode. Hence the Destination Format Register (DFR) is eliminated in x2APIC mode.

The 32-bit logical x2APIC ID field of LDR is partitioned into two sub-fields:

- Cluster ID (LDR[31:16]): is the address of the destination cluster
- Logical ID (LDR[15:0]): defines a logical ID of the individual local x2APIC within the cluster specified by LDR[31:16].

This layout enables 2^16-1 clusters each with up to 16 unique logical IDs - effectively providing an addressability of ((2^20) - 16) processors in logical destination mode.

It is likely that processor implementations may choose to support less than 16 bits of the cluster ID or less than 16-bits of the Logical ID in the Logical Destination Register. However system software should be agnostic to the number of bits implemented in the cluster ID and logical ID sub-fields. The x2APIC hardware initialization will ensure that the appropriately initialized logical x2APIC IDs are available to system software and reads of non-implemented bits return zero. This is a read-only register that software must read to determine the logical x2APIC ID of the processor. Specifically, software can apply a 16-bit mask to the lowest 16 bits of the logical x2APIC ID to identify the logical address of a processor within a cluster without needing to know the number of implemented bits in cluster ID and Logical ID sub-fields. Similarly, software can create a message destination address for cluster model, by bit-Oring the Logical X2APIC ID (31:0) of processors that have matching Cluster ID(31:16).

To enable cluster ID assignment in a fashion that matches the system topology characteristics and to enable efficient routing of logical mode lowest priority device interrupts in link based platform interconnects, the LDR are initialized by hardware based on the value of x2APIC ID upon x2APIC state transitions. Details of this initialization are provided in Section 11.12.10.2.

11.12.10.2 Deriving Logical x2APIC ID from the Local x2APIC ID

In x2APIC mode, the 32-bit logical x2APIC ID, which can be read from LDR, is derived from the 32-bit local x2APIC ID. Specifically, the 16-bit logical ID sub-field is derived by shifting 1 by the lowest 4 bits of the x2APIC ID, i.e., Logical ID = 1 « x2APIC ID[3:0]. The remaining bits of the x2APIC ID then form the cluster ID portion of the logical x2APIC ID:

```
Logical x2APIC ID = [(x2APIC ID[19:4] « 16) | (1 « x2APIC ID[3:0])]
```

The use of the lowest 4 bits in the x2APIC ID implies that at least 16 APIC IDs are reserved for logical processors within a socket in multi-socket configurations. If more than 16 APIC IDS are reserved for logical processors in a socket/package then multiple cluster IDs can exist within the package.

The LDR initialization occurs whenever the x2APIC mode is enabled (see Section 11.12.5).

11.12.11 SELF IPI Register

SELF IPIs are used extensively by some system software. The x2APIC architecture introduces a new register interface. This new register is dedicated to the purpose of sending self-IPIs with the intent of enabling a highly optimized path for sending self-IPIs.

Figure 11-30 provides the layout of the SELF IPI register. System software only specifies the vector associated with the interrupt to be sent. The semantics of sending a self-IPI via the SELF IPI register are identical to sending a self targeted edge triggered fixed interrupt with the specified vector. Specifically the semantics are identical to the following settings for an inter-processor interrupt sent via the ICR - Destination Shorthand (ICR[19:18] = 01 (Self)), Trigger Mode (ICR[15] = 0 (Edge)), Delivery Mode (ICR[10:8] = 000 (Fixed)), Vector (ICR[7:0] = Vector).

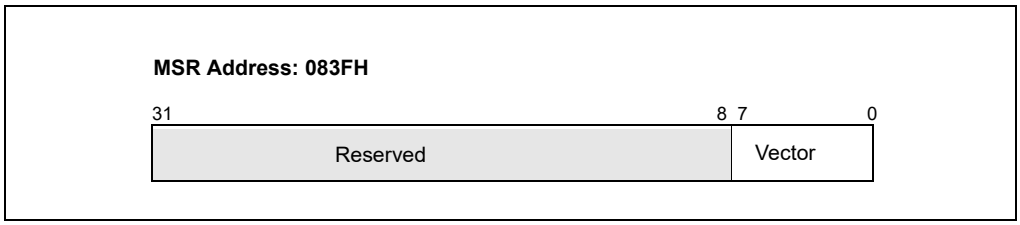

Figure 11-30. SELF IPI register

The SELF IPI register is a write-only register. A RDMSR instruction with address of the SELF IPI register causes a general-protection exception.

The handling and prioritization of a self-IPI sent via the SELF IPI register is architecturally identical to that for an IPI sent via the ICR from a legacy xAPIC unit. Specifically the state of the interrupt would be tracked via the Interrupt Request Register (IRR) and In Service Register (ISR) and Trigger Mode Register (TMR) as if it were received from the system bus. Also sending the IPI via the Self Interrupt Register ensures that interrupt is delivered to the processor core. Specifically completion of the WRMSR instruction to the SELF IPI register implies that the interrupt has been logged into the IRR. As expected for edge triggered interrupts, depending on the processor priority and readiness to accept interrupts, it is possible that interrupts sent via the SELF IPI register or via the ICR with identical vectors can be combined.

11.13 APIC BUS MESSAGE FORMATS

This section describes the message formats used when transmitting messages on the serial APIC bus. The information described here pertains only to the Pentium and P6 family processors.

11.13.1 Bus Message Formats

The local and I/O APICs transmit three types of messages on the serial APIC bus: EOI message, short message, and non-focused lowest priority message. The purpose of each type of message and its format are described below.

11.13.2 EOI Message

Local APICs send 14-cycle EOI messages to the I/O APIC to indicate that a level triggered interrupt has been accepted by the processor. This interrupt, in turn, is a result of software writing into the EOI register of the local APIC. Table 11-8 shows the cycles in an EOI message.

Table 11-8. EOI Message (14 Cycles)

Cycle	Bit1	Bit0	
1	1	1	11 = EOI
2	ArbID3	0	Arbitration ID bits 3 through 0

Table 11-8. EOI Message (14 Cycles) (Contd.)

Cycle	Bit1	Bit0	
3	ArbID2	0	
4	ArbID1	0	
5	ArbID0	0	
6	V7	V6	Interrupt vector V7 - V0
7	V5	V4	
8	V3	V2	
9	V1	V0	
10	C	C	Checksum for cycles 6 - 9
11	0	0	
12	A	A	Status Cycle 0
13	A1	A1	Status Cycle 1
14	0	0	Idle

The checksum is computed for cycles 6 through 9. It is a cumulative sum of the 2-bit (Bit1:Bit0) logical data values. The carry out of all but the last addition is added to the sum. If any APIC computes a different checksum than the one appearing on the bus in cycle 10, it signals an error, driving 11 on the APIC bus during cycle 12. In this case, the APICs disregard the message. The sending APIC will receive an appropriate error indication (see Section 11.5.3, "Error Handling") and resend the message. The status cycles are defined in Table 11-11.

11.13.2.1 Short Message

Short messages (21-cycles) are used for sending fixed, NMI, SMI, INIT, start-up, ExtINT, and lowest-priority-with-focus interrupts. Table 11-9 shows the cycles in a short message.

Table 11-9. Short Message (21 Cycles)

Cycle	Bit1	Bit0	
1	0	1	0 1 = normal
2	ArbID3	0	Arbitration ID bits 3 through 0
3	ArbID2	0	
4	ArbID1	0	
5	ArbID0	0	
6	DM	M2	DM = Destination Mode
7	M1	M0	M2-M0 = Delivery mode
8	L	TM	L = Level, TM = Trigger Mode
9	V7	V6	V7-V0 = Interrupt Vector
10	V5	V4	
11	V3	V2	
12	V1	V0	
13	D7	D6	D7-D0 = Destination
14	D5	D4	
15	D3	D2	
16	D1	D0	

Table 11-9. Short Message (21 Cycles) (Contd.)

Cycle	Bit1	Bit0	
17	C	C	Checksum for cycles 6-16
18	0	0	
19	A	A	Status cycle 0
20	A1	A1	Status cycle 1
21	0	0	Idle

If the physical delivery mode is being used, then cycles 15 and 16 represent the APIC ID and cycles 13 and 14 are considered don't care by the receiver. If the logical delivery mode is being used, then cycles 13 through 16 are the 8-bit logical destination field.

For shorthands of "all-incl-self" and "all-excl-self," the physical delivery mode and an arbitration priority of 15 (D0:D3 = 1111) are used. The agent sending the message is the only one required to distinguish between the two cases. It does so using internal information.

When using lowest priority delivery with an existing focus processor, the focus processor identifies itself by driving 10 during cycle 19 and accepts the interrupt. This is an indication to other APICs to terminate arbitration. If the focus processor has not been found, the short message is extended on-the-fly to the non-focused lowest-priority message. Note that except for the EOI message, messages generating a checksum or an acceptance error (see Section 11.5.3, "Error Handling") terminate after cycle 21.

11.13.2.2 Non-focused Lowest Priority Message

These 34-cycle messages (see Table 11-10) are used in the lowest priority delivery mode when a focus processor is not present. Cycles 1 through 20 are same as for the short message. If during the status cycle (cycle 19) the state of the (A:A) flags is 10B, a focus processor has been identified, and the short message format is used (see Table 11-9). If the (A:A) flags are set to 00B, lowest priority arbitration is started and the 34-cycles of the non-focused lowest priority message are competed. For other combinations of status flags, refer to Section 11.13.2.3, "APIC Bus Status Cycles."

Table 11-10. Non-Focused Lowest Priority Message (34 Cycles)

Cycle	Bit0	Bit1	
1	0	1	0 1 = normal
2	ArbID3	0	Arbitration ID bits 3 through 0
3	ArbID2	0	
4	ArbID1	0	
5	ArbID0	0	
6	DM	M2	DM = Destination mode
7	M1	M0	M2-M0 = Delivery mode
8	L	TM	L = Level, TM = Trigger Mode
9	V7	V6	V7-V0 = Interrupt Vector
10	V5	V4	
11	V3	V2	
12	V1	V0	
13	D7	D6	D7-D0 = Destination
14	D5	D4	
15	D3	D2	
16	D1	D0	

Table 11-10. Non-Focused Lowest Priority Message (34 Cycles) (Contd.)

Cycle	Bit0	Bit1	
17	C	C	Checksum for cycles 6-16
18	0	0	
19	A	A	Status cycle 0
20	A1	A1	Status cycle 1
21	P7	0	P7 - P0 = Inverted Processor Priority
22	P6	0	
23	P5	0	
24	P4	0	
25	P3	0	
26	P2	0	
27	P1	0	
28	P0	0	
29	ArbID3	0	Arbitration ID 3 -0
30	ArbID2	0	
31	ArbID1	0	
32	ArbID0	0	
33	A2	A2	Status Cycle
34	0	0	Idle

Cycles 21 through 28 are used to arbitrate for the lowest priority processor. The processors participating in the arbitration drive their inverted processor priority on the bus. Only the local APICs having free interrupt slots participate in the lowest priority arbitration. If no such APIC exists, the message will be rejected, requiring it to be tried at a later time.

Cycles 29 through 32 are also used for arbitration in case two or more processors have the same lowest priority. In the lowest priority delivery mode, all combinations of errors in cycle 33 (A2 A2) will set the "accept error" bit in the error status register (see Figure 11-9). Arbitration priority update is performed in cycle 20, and is not affected by errors detected in cycle 33. Only the local APIC that wins in the lowest priority arbitration, drives cycle 33. An error in cycle 33 will force the sender to resend the message.

11.13.2.3 APIC Bus Status Cycles

Certain cycles within an APIC bus message are status cycles. During these cycles the status flags (A:A) and (A1:A1) are examined. Table 11-11 shows how these status flags are interpreted, depending on the current delivery mode and existence of a focus processor.

Table 11-11. APIC Bus Status Cycles Interpretation

Delivery Mode	A Status	A1 Status	A2 Status	Update ArbID and Cycle#	Message Length	Retry
EOI	00: CS_OK	10: Accept	XX:	Yes, 13	14 Cycle	No
	00: CS_OK	11: Retry	XX:	Yes, 13	14 Cycle	Yes
	00: CS_OK	0X: Accept Error	XX:	No	14 Cycle	Yes
	11: CS_Error	XX:	XX:	No	14 Cycle	Yes
	10: Error	XX:	XX:	No	14 Cycle	Yes
	01: Error	XX:	XX:	No	14 Cycle	Yes
Fixed	00: CS_OK	10: Accept	XX:	Yes, 20	21 Cycle	No
	00: CS_OK	11: Retry	XX:	Yes, 20	21 Cycle	Yes
	00: CS_OK	0X: Accept Error	XX:	No	21 Cycle	Yes
	11: CS_Error	XX:	XX:	No	21 Cycle	Yes
	10: Error	XX:	XX:	No	21 Cycle	Yes
	01: Error	XX:	XX:	No	21 Cycle	Yes
NMI, SMI, INIT, ExtINT, Start-Up	00: CS_OK	10: Accept	XX:	Yes, 20	21 Cycle	No
	00: CS_OK	11: Retry	XX:	Yes, 20	21 Cycle	Yes
	00: CS_OK	0X: Accept Error	XX:	No	21 Cycle	Yes
	11: CS_Error	XX:	XX:	No	21 Cycle	Yes
	10: Error	XX:	XX:	No	21 Cycle	Yes
	01: Error	XX:	XX:	No	21 Cycle	Yes
Lowest	00: CS_OK, NoFocus	11: Do Lowest	10: Accept	Yes, 20	34 Cycle	No
	00: CS_OK, NoFocus	11: Do Lowest	11: Error	Yes, 20	34 Cycle	Yes
	00: CS_OK, NoFocus	11: Do Lowest	0X: Error	Yes, 20	34 Cycle	Yes
	00: CS_OK, NoFocus	10: End and Retry	XX:	Yes, 20	34 Cycle	Yes
	00: CS_OK, NoFocus	0X: Error	XX:	No	34 Cycle	Yes
	10: CS_OK, Focus	XX:	XX:	Yes, 20	34 Cycle	No
	11: CS_Error	XX:	XX:	No	21 Cycle	Yes
	01: Error	XX:	XX:	No	21 Cycle	Yes

CHAPTER 12
MEMORY CACHE CONTROL

This chapter describes the memory cache and cache control mechanisms, the TLBs, and the store buffer in Intel 64 and IA-32 processors. It also describes the memory type range registers (MTRRs) introduced in the P6 family processors and how they are used to control caching of physical memory locations.

12.1 INTERNAL CACHES, TLBS, AND BUFFERS

The Intel 64 and IA-32 architectures support cache, translation look aside buffers (TLBs), and a store buffer for temporary on-chip (and external) storage of instructions and data. (Figure 12-1 shows the arrangement of caches, TLBs, and the store buffer for the Pentium 4 and Intel Xeon processors.) Table 12-1 shows the characteristics of these caches and buffers for the Pentium 4, Intel Xeon, P6 family, and Pentium processors. **The sizes and characteristics of these units are machine specific and may change in future versions of the processor.** The CPUID instruction returns the sizes and characteristics of the caches and buffers for the processor on which the instruction is executed. See "CPUID—CPU Identification" in Chapter 3, "Instruction Set Reference, A-L," of the *Intel® 64 and IA-32 Architectures Software Developer's Manual, Volume 2A*.

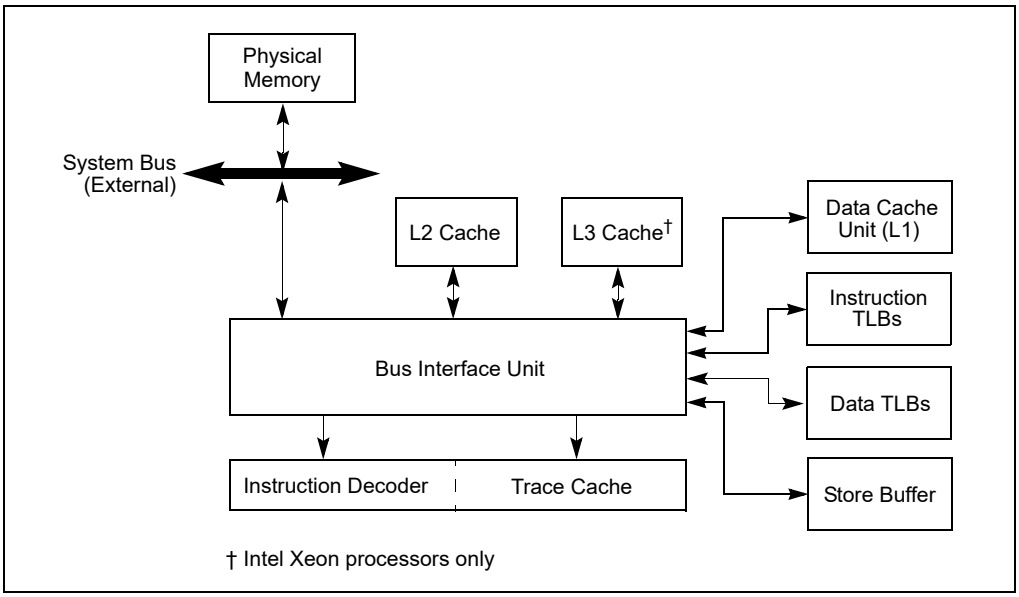

Figure 12-1. Cache Structure of the Pentium 4 and Intel Xeon Processors

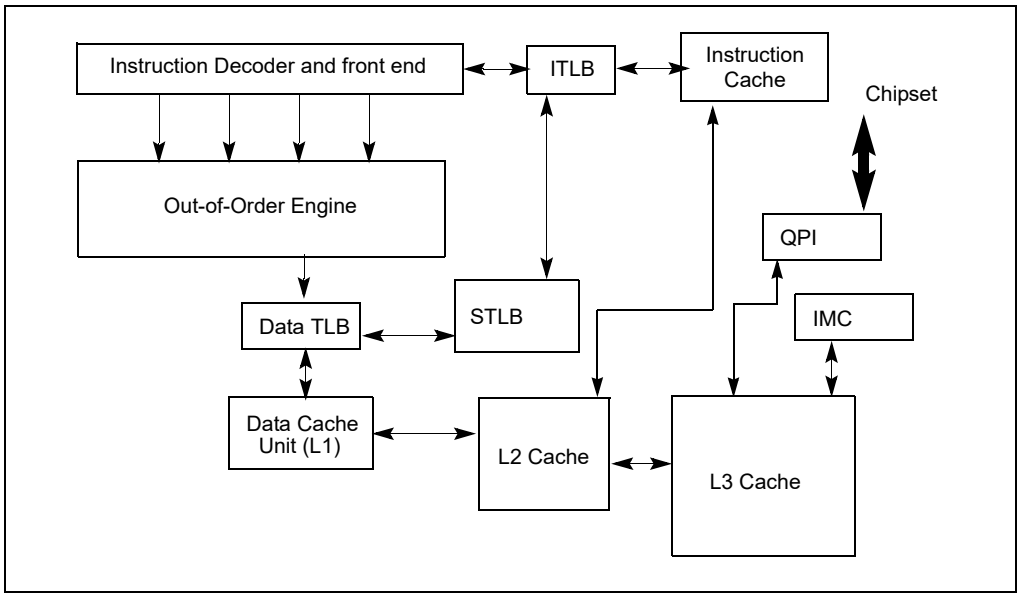

Figure 12-2. Cache Structure of the Intel Core i7 Processors

Figure 12-2 shows the cache arrangement of Intel Core i7 processor.

Table 12-1. Characteristics of the Caches, TLBs, Store Buffer, and Write Combining Buffer in Intel 64 and IA-32 Processors

Cache or Buffer	Characteristics
Trace Cache[1]	▪ Pentium 4 and Intel Xeon processors (Based on Intel NetBurst® microarchitecture): 12 Kμops, 8-way set associative. ▪ Intel Core i7, Intel Core 2 Duo, Intel Atom, Intel Core Duo, Intel Core Solo, Pentium M processor: not implemented. ▪ P6 family and Pentium processors: not implemented.
L1 Instruction Cache	▪ Pentium 4 and Intel Xeon processors (Based on Intel NetBurst microarchitecture): not implemented. ▪ Intel Core i7 processor: 32-KByte, 4-way set associative. ▪ Intel Core 2 Duo, Intel Atom, Intel Core Duo, Intel Core Solo, Pentium M processor: 32-KByte, 8-way set associative. ▪ P6 family and Pentium processors: 8- or 16-KByte, 4-way set associative, 32-byte cache line size; 2-way set associative for earlier Pentium processors.
L1 Data Cache	▪ Pentium 4 and Intel Xeon processors (Based on Intel NetBurst microarchitecture): 8-KByte, 4-way set associative, 64-byte cache line size. ▪ Pentium 4 and Intel Xeon processors (Based on Intel NetBurst microarchitecture): 16-KByte, 8-way set associative, 64-byte cache line size. ▪ Intel Atom processors: 24-KByte, 6-way set associative, 64-byte cache line size. ▪ Intel Core i7, Intel Core 2 Duo, Intel Core Duo, Intel Core Solo, Pentium M and Intel Xeon processors: 32-KByte, 8-way set associative, 64-byte cache line size. ▪ P6 family processors: 16-KByte, 4-way set associative, 32-byte cache line size; 8-KBytes, 2-way set associative for earlier P6 family processors. ▪ Pentium processors: 16-KByte, 4-way set associative, 32-byte cache line size; 8-KByte, 2-way set associative for earlier Pentium processors.

Table 12-1. Characteristics of the Caches, TLBs, Store Buffer, and Write Combining Buffer in Intel 64 and IA-32 Processors (Contd.)

Cache or Buffer	Characteristics
L2 Unified Cache	▪ Intel Core 2 Duo and Intel Xeon processors: up to 4-MByte (or 4MBx2 in quadcore processors), 16-way set associative, 64-byte cache line size. ▪ Intel Core 2 Duo and Intel Xeon processors: up to 6-MByte (or 6MBx2 in quadcore processors), 24-way set associative, 64-byte cache line size. ▪ Intel Core i7, i5, i3 processors: 256KBbyte, 8-way set associative, 64-byte cache line size. ▪ Intel Atom processors: 512-KByte, 8-way set associative, 64-byte cache line size. ▪ Intel Core Duo, Intel Core Solo processors: 2-MByte, 8-way set associative, 64-byte cache line size ▪ Pentium 4 and Intel Xeon processors: 256, 512, 1024, or 2048-KByte, 8-way set associative, 64-byte cache line size, 128-byte sector size. ▪ Pentium M processor: 1 or 2-MByte, 8-way set associative, 64-byte cache line size. ▪ P6 family processors: 128-KByte, 256-KByte, 512-KByte, 1-MByte, or 2-MByte, 4-way set associative, 32-byte cache line size. ▪ Pentium processor (external optional): System specific, typically 256- or 512-KByte, 4-way set associative, 32-byte cache line size.
L3 Unified Cache	▪ Intel Xeon processors: 512-KByte, 1-MByte, 2-MByte, or 4-MByte, 8-way set associative, 64-byte cache line size, 128-byte sector size. ▪ Intel Core i7 processor, Intel Xeon processor 5500: Up to 8MByte, 16-way set associative, 64-byte cache line size. ▪ Intel Xeon processor 5600: Up to 12MByte, 64-byte cache line size. ▪ Intel Xeon processor 7500: Up to 24MByte, 64-byte cache line size.
Instruction TLB (4-KByte Pages)	▪ Pentium 4 and Intel Xeon processors (Based on Intel NetBurst microarchitecture): 128 entries, 4-way set associative. ▪ Intel Atom processors: 32-entries, fully associative. ▪ Intel Core i7, i5, i3 processors: 64-entries per thread (128-entries per core), 4-way set associative. ▪ Intel Core 2 Duo, Intel Core Duo, Intel Core Solo processors, Pentium M processor: 128 entries, 4-way set associative. ▪ P6 family processors: 32 entries, 4-way set associative. ▪ Pentium processor: 32 entries, 4-way set associative; fully set associative for Pentium processors with MMX technology.
Data TLB (4-KByte Pages)	▪ Intel Core i7, i5, i3 processors, DTLB0: 64-entries, 4-way set associative. ▪ Intel Core 2 Duo processors: DTLB0, 16 entries, DTLB1, 256 entries, 4 ways. ▪ Intel Atom processors: 16-entry-per-thread micro-TLB, fully associative; 64-entry DTLB, 4-way set associative; 16-entry PDE cache, fully associative. ▪ Pentium 4 and Intel Xeon processors (Based on Intel NetBurst microarchitecture): 64 entry, fully set associative, shared with large page DTLB. ▪ Intel Core Duo, Intel Core Solo processors, Pentium M processor: 128 entries, 4-way set associative. ▪ Pentium and P6 family processors: 64 entries, 4-way set associative; fully set, associative for Pentium processors with MMX technology.
Instruction TLB (Large Pages)	▪ Intel Core i7, i5, i3 processors: 7-entries per thread, fully associative. ▪ Intel Core 2 Duo processors: 4 entries, 4 ways. ▪ Pentium 4 and Intel Xeon processors: large pages are fragmented. ▪ Intel Core Duo, Intel Core Solo, Pentium M processor: 2 entries, fully associative. ▪ P6 family processors: 2 entries, fully associative. ▪ Pentium processor: Uses same TLB as used for 4-KByte pages.
Data TLB (Large Pages)	▪ Intel Core i7, i5, i3 processors, DTLB0: 32-entries, 4-way set associative. ▪ Intel Core 2 Duo processors: DTLB0, 16 entries, DTLB1, 32 entries, 4 ways. ▪ Intel Atom processors: 8 entries, 4-way set associative. ▪ Pentium 4 and Intel Xeon processors: 64 entries, fully set associative; shared with small page data TLBs. ▪ Intel Core Duo, Intel Core Solo, Pentium M processor: 8 entries, fully associative. ▪ P6 family processors: 8 entries, 4-way set associative. ▪ Pentium processor: 8 entries, 4-way set associative; uses same TLB as used for 4-KByte pages in Pentium processors with MMX technology.
Second-level Unified TLB (4-KByte Pages)	▪ Intel Core i7, i5, i3 processor, STLB: 512-entries, 4-way set associative.

Table 12-1. Characteristics of the Caches, TLBs, Store Buffer, and Write Combining Buffer in Intel 64 and IA-32 Processors (Contd.)

Cache or Buffer	Characteristics
Store Buffer	▪ Intel Core i7, i5, i3 processors: 32entries. ▪ Intel Core 2 Duo processors: 20 entries. ▪ Intel Atom processors: 8 entries, used for both WC and store buffers. ▪ Pentium 4 and Intel Xeon processors: 24 entries. ▪ Pentium M processor: 16 entries. ▪ P6 family processors: 12 entries. ▪ Pentium processor: 2 buffers, 1 entry each (Pentium processors with MMX technology have 4 buffers for 4 entries).
Write Combining (WC) Buffer	▪ Intel Core 2 Duo processors: 8 entries. ▪ Intel Atom processors: 8 entries, used for both WC and store buffers. ▪ Pentium 4 and Intel Xeon processors: 6 or 8 entries. ▪ Intel Core Duo, Intel Core Solo, Pentium M processors: 6 entries. ▪ P6 family processors: 4 entries.

NOTES:

1 Introduced to the IA-32 architecture in the Pentium 4 and Intel Xeon processors.

Intel 64 and IA-32 processors may implement four types of caches: the trace cache, the level 1 (L1) cache, the level 2 (L2) cache, and the level 3 (L3) cache. See Figure 12-1. Cache availability is described below:

- **Intel Core i7, i5, i3 processor family and Intel Xeon processor family based on Nehalem microarchitecture and Westmere microarchitecture** — The L1 cache is divided into two sections: one section is dedicated to caching instructions (pre-decoded instructions) and the other caches data. The L2 cache is a unified data and instruction cache. Each processor core has its own L1 and L2. The L3 cache is an inclusive, unified data and instruction cache, shared by all processor cores inside a physical package. No trace cache is implemented.
- **Intel® Core™ 2 processor family and Intel® Xeon® processor family based on Intel® Core™ microarchitecture** — The L1 cache is divided into two sections: one section is dedicated to caching instructions (pre-decoded instructions) and the other caches data. The L2 cache is a unified data and instruction cache located on the processor chip; it is shared between two processor cores in a dual-core processor implementation. Quad-core processors have two L2, each shared by two processor cores. No trace cache is implemented.
- **Intel Atom® processor** — The L1 cache is divided into two sections: one section is dedicated to caching instructions (pre-decoded instructions) and the other caches data. The L2 cache is a unified data and instruction cache is located on the processor chip. No trace cache is implemented.
- **Intel® Core™ Solo and Intel® Core™ Duo processors** — The L1 cache is divided into two sections: one section is dedicated to caching instructions (pre-decoded instructions) and the other caches data. The L2 cache is a unified data and instruction cache located on the processor chip. It is shared between two processor cores in a dual-core processor implementation. No trace cache is implemented.
- **Pentium® 4 and Intel® Xeon® processors Based on Intel NetBurst® microarchitecture** — The trace cache caches decoded instructions (μops) from the instruction decoder and the L1 cache contains data. The L2 and L3 caches are unified data and instruction caches located on the processor chip. Dualcore processors have two L2, one in each processor core. Note that the L3 cache is only implemented on some Intel Xeon processors.
- **P6 family processors** — The L1 cache is divided into two sections: one dedicated to caching instructions (pre-decoded instructions) and the other to caching data. The L2 cache is a unified data and instruction cache located on the processor chip. P6 family processors do not implement a trace cache.
- **Pentium® processors** — The L1 cache has the same structure as on P6 family processors. There is no trace cache. The L2 cache is a unified data and instruction cache external to the processor chip on earlier Pentium processors and implemented on the processor chip in later Pentium processors. For Pentium processors where the L2 cache is external to the processor, access to the cache is through the system bus.

For Intel Core i7 processors and processors based on Intel Core, Intel Atom, and Intel NetBurst microarchitectures, Intel Core Duo, Intel Core Solo and Pentium M processors, the cache lines for the L1 and L2 caches (and L3 caches if supported) are 64 bytes wide. The processor always reads a cache line from system memory beginning on a 64-byte boundary. (A 64-byte aligned cache line begins at an address with its 6 least-significant bits clear.) A cache

line can be filled from memory with a 8-transfer burst transaction. The caches do not support partially-filled cache lines, so caching even a single doubleword requires caching an entire line.

The L1 and L2 cache lines in the P6 family and Pentium processors are 32 bytes wide, with cache line reads from system memory beginning on a 32-byte boundary (5 least-significant bits of a memory address clear.) A cache line can be filled from memory with a 4-transfer burst transaction. Partially-filled cache lines are not supported.

The trace cache in processors based on Intel NetBurst microarchitecture is available in all execution modes: protected mode, system management mode (SMM), and real-address mode. The L1,L2, and L3 caches are also available in all execution modes; however, use of them must be handled carefully in SMM (see Section 32.4.2, "SMRAM Caching").

The TLBs store the most recently used page-directory and page-table entries. They speed up memory accesses when paging is enabled by reducing the number of memory accesses that are required to read the page tables stored in system memory. The TLBs are divided into four groups: instruction TLBs for 4-KByte pages, data TLBs for 4-KByte pages; instruction TLBs for large pages (2-MByte, 4-MByte or 1-GByte pages), and data TLBs for large pages. The TLBs are normally active only in protected mode with paging enabled. When paging is disabled or the processor is in real-address mode, the TLBs maintain their contents until explicitly or implicitly flushed (see Section 12.9, "Invalidating the Translation Lookaside Buffers (TLBs)").

Processors based on Intel Core microarchitectures implement one level of instruction TLB and two levels of data TLB. Intel Core i7 processor provides a second-level unified TLB.

The store buffer is associated with the processors instruction execution units. It allows writes to system memory and/or the internal caches to be saved and in some cases combined to optimize the processor's bus accesses. The store buffer is always enabled in all execution modes.

The processor's caches are for the most part transparent to software. When enabled, instructions and data flow through these caches without the need for explicit software control. However, knowledge of the behavior of these caches may be useful in optimizing software performance. For example, knowledge of cache dimensions and replacement algorithms gives an indication of how large of a data structure can be operated on at once without causing cache thrashing.

In multiprocessor systems, maintenance of cache consistency may, in rare circumstances, require intervention by system software. For these rare cases, the processor provides privileged cache control instructions for use in flushing caches and forcing memory ordering.

There are several instructions that software can use to improve the performance of the L1, L2, and L3 caches, including the PREFETCHh, CLFLUSH, and CLFLUSHOPT instructions and the non-temporal move instructions (MOVNTI, MOVNTQ, MOVNTDQ, MOVNTPS, and MOVNTPD). The use of these instructions are discussed in Section 12.5.5, "Cache Management Instructions."

12.2 CACHING TERMINOLOGY

IA-32 processors (beginning with the Pentium processor) and Intel 64 processors use the MESI (modified, exclusive, shared, invalid) cache protocol to maintain consistency with internal caches and caches in other processors (see Section 12.4, "Cache Control Protocol").

When the processor recognizes that an operand being read from memory is cacheable, the processor reads an entire cache line into the appropriate cache (L1, L2, L3, or all). This operation is called a **cache line fill**. If the memory location containing that operand is still cached the next time the processor attempts to access the operand, the processor can read the operand from the cache instead of going back to memory. This operation is called a **cache hit**.

When the processor attempts to write an operand to a cacheable area of memory, it first checks if a cache line for that memory location exists in the cache. If a valid cache line does exist, the processor (depending on the write policy currently in force) can write the operand into the cache instead of writing it out to system memory. This operation is called a **write hit**. If a write misses the cache (that is, a valid cache line is not present for area of memory being written to), the processor performs a cache line fill, write allocation. Then it writes the operand into the cache line and (depending on the write policy currently in force) can also write it out to memory. If the operand is to be written out to memory, it is written first into the store buffer, and then written from the store buffer to memory when the system bus is available. (Note that for the Pentium processor, write misses do not result in a cache line fill; they always result in a write to memory. For this processor, only read misses result in cache line fills.)

When operating in an MP system, IA-32 processors (beginning with the Intel486 processor) and Intel 64 processors have the ability to **snoop** other processor's accesses to system memory and to their internal caches. They use this snooping ability to keep their internal caches consistent both with system memory and with the caches in other processors on the bus. For example, in the Pentium and P6 family processors, if through snooping one processor detects that another processor intends to write to a memory location that it currently has cached in **shared state**, the snooping processor will invalidate its cache line forcing it to perform a cache line fill the next time it accesses the same memory location.

Beginning with the P6 family processors, if a processor detects (through snooping) that another processor is trying to access a memory location that it has modified in its cache, but has not yet written back to system memory, the snooping processor will signal the other processor (by means of the HITM# signal) that the cache line is held in modified state and will perform an implicit write-back of the modified data. The implicit write-back is transferred directly to the initial requesting processor and snooped by the memory controller to assure that system memory has been updated. Here, the processor with the valid data may pass the data to the other processors without actually writing it to system memory; however, it is the responsibility of the memory controller to snoop this operation and update memory.

12.3 METHODS OF CACHING AVAILABLE

The processor allows any area of system memory to be cached in the L1, L2, and L3 caches. In individual pages or regions of system memory, it allows the type of caching (also called **memory type**) to be specified (see Section 12.5). Memory types currently defined for the Intel 64 and IA-32 architectures are (see Table 12-2):

- **Strong Uncacheable (UC)** —System memory locations are not cached. All reads and writes appear on the system bus and are executed in program order without reordering. No speculative memory accesses, page-table walks, or prefetches of speculated branch targets are made. This type of cache-control is useful for memory-mapped I/O devices. When used with normal RAM, it greatly reduces processor performance.

NOTE

The behavior of x87 and SIMD instructions referencing memory is implementation dependent. In some implementations, accesses to UC memory may occur more than once. To ensure predictable behavior, use loads and stores of general purpose registers to access UC memory that may have read or write side effects.

Table 12-2. Memory Types and Their Properties

Memory Type and Mnemonic	Cacheable	Writeback Cacheable	Allows Speculative Reads	Memory Ordering Model
Strong Uncacheable (UC)	No	No	No	Strong Ordering
Uncacheable (UC-)	No	No	No	Strong Ordering. Can only be selected through the PAT. Can be overridden by WC in MTRRs.
Write Combining (WC)	No	No	Yes	Weak Ordering. Available by programming MTRRs or by selecting it through the PAT.
Write Through (WT)	Yes	No	Yes	Speculative Processor Ordering.
Write Back (WB)	Yes	Yes	Yes	Speculative Processor Ordering.
Write Protected (WP)	Yes for reads; no for writes	No	Yes	Speculative Processor Ordering. Available by programming MTRRs.

- **Uncacheable (UC-)** — Has same characteristics as the strong uncacheable (UC) memory type, except that this memory type can be overridden by programming the MTRRs for the WC memory type. This memory type is available in processor families starting from the Pentium III processors and can only be selected through the PAT.

- **Write Combining (WC)** — System memory locations are not cached (as with uncacheable memory) and coherency is not enforced by the processor's bus coherency protocol. Speculative reads are allowed. Writes may be delayed and combined in the write combining buffer (WC buffer) to reduce memory accesses. If the WC buffer is partially filled, the writes may be delayed until the next occurrence of a serializing event; such as an SFENCE or MFENCE instruction, CPUID or other serializing instruction, a read or write to uncached memory, an interrupt occurrence, or an execution of a LOCK instruction (including one with an XACQUIRE or XRELEASE prefix). In addition, an execution of the XEND instruction (to end a transactional region) evicts any writes that were buffered before the corresponding execution of the XBEGIN instruction (to begin the transactional region) before evicting any writes that were performed inside the transactional region.

  This type of cache-control is appropriate for video frame buffers, where the order of writes is unimportant as long as the writes update memory so they can be seen on the graphics display. See Section 12.3.1, "Buffering of Write Combining Memory Locations," for more information about caching the WC memory type. This memory type is available in the Pentium Pro and Pentium II processors by programming the MTRRs; or in processor families starting from the Pentium III processors by programming the MTRRs or by selecting it through the PAT.
- **Write-through (WT)** — Writes and reads to and from system memory are cached. Reads come from cache lines on cache hits; read misses cause cache fills. Speculative reads are allowed. All writes are written to a cache line (when possible) and through to system memory. When writing through to memory, invalid cache lines are never filled, and valid cache lines are either filled or invalidated. Write combining is allowed. This type of cache-control is appropriate for frame buffers or when there are devices on the system bus that access system memory, but do not perform snooping of memory accesses. It enforces coherency between caches in the processors and system memory.
- **Write-back (WB)** — Writes and reads to and from system memory are cached. Reads come from cache lines on cache hits; read misses cause cache fills. Speculative reads are allowed. Write misses cause cache line fills (in processor families starting with the P6 family processors), and writes are performed entirely in the cache, when possible. Write combining is allowed. The write-back memory type reduces bus traffic by eliminating many unnecessary writes to system memory. Writes to a cache line are not immediately forwarded to system memory; instead, they are accumulated in the cache. The modified cache lines are written to system memory later, when a write-back operation is performed. Write-back operations are triggered when cache lines need to be deallocated, such as when new cache lines are being allocated in a cache that is already full. They also are triggered by the mechanisms used to maintain cache consistency. This type of cache-control provides the best performance, but it requires that all devices that access system memory on the system bus be able to snoop memory accesses to ensure system memory and cache coherency.
- **Write protected (WP) —** Reads come from cache lines when possible, and read misses cause cache fills. Writes are propagated to the system bus and cause corresponding cache lines on all processors on the bus to be invalidated. Speculative reads are allowed. This memory type is available in processor families starting from the P6 family processors by programming the MTRRs (see Table 12-6).

Table 12-3 shows which of these caching methods are available in the Pentium, P6 Family, Pentium 4, and Intel Xeon processors.

Table 12-3. Methods of Caching Available in Intel Core 2 Duo, Intel Atom, Intel Core Duo, Pentium M, Pentium 4, Intel Xeon, P6 Family, and Pentium Processors

Memory Type	Intel Core 2 Duo, Intel Atom, Intel Core Duo, Pentium M, Pentium 4 and Intel Xeon Processors	P6 Family Processors	Pentium Processor
Strong Uncacheable (UC)	Yes	Yes	Yes
Uncacheable (UC-)	Yes	Yes*	No
Write Combining (WC)	Yes	Yes	No
Write Through (WT)	Yes	Yes	Yes
Write Back (WB)	Yes	Yes	Yes
Write Protected (WP)	Yes	Yes	No

NOTE:

* Introduced in the Pentium III processor; not available in the Pentium Pro or Pentium II processors

12.3.1 Buffering of Write Combining Memory Locations

Writes to the WC memory type are not cached in the typical sense of the word cached. They are retained in an internal write combining buffer (WC buffer) that is separate from the internal L1, L2, and L3 caches and the store buffer. The WC buffer is not snooped and thus does not provide data coherency. Buffering of writes to WC memory is done to allow software a small window of time to supply more modified data to the WC buffer while remaining as non-intrusive to software as possible. The buffering of writes to WC memory also causes data to be collapsed; that is, multiple writes to the same memory location will leave the last data written in the location and the other writes will be lost.

The size and structure of the WC buffer is not architecturally defined. For the Intel Core 2 Duo, Intel Atom, Intel Core Duo, Pentium M, Pentium 4 and Intel Xeon processors; the WC buffer is made up of several 64-byte WC buffers. For the P6 family processors, the WC buffer is made up of several 32-byte WC buffers.

When software begins writing to WC memory, the processor begins filling the WC buffers one at a time. When one or more WC buffers has been filled, the processor has the option of evicting the buffers to system memory. The protocol for evicting the WC buffers is implementation dependent and should not be relied on by software for system memory coherency. When using the WC memory type, software **must** be sensitive to the fact that the writing of data to system memory is being delayed and **must** deliberately empty the WC buffers when system memory coherency is required.

Once the processor has started to evict data from the WC buffer into system memory, it will make a bus-transaction style decision based on how much of the buffer contains valid data. If the buffer is full (for example, all bytes are valid), the processor will execute a burst-write transaction on the bus. This results in all 32 bytes (P6 family processors) or 64 bytes (Pentium 4 and more recent processor) being transmitted on the data bus in a single burst transaction. If one or more of the WC buffer's bytes are invalid (for example, have not been written by software), the processor will transmit the data to memory using "partial write" transactions (one chunk at a time, where a "chunk" is 8 bytes).

This will result in a maximum of 4 partial write transactions (for P6 family processors) or 8 partial write transactions (for the Pentium 4 and more recent processors) for one WC buffer of data sent to memory.

The WC memory type is weakly ordered by definition. Once the eviction of a WC buffer has started, the data is subject to the weak ordering semantics of its definition. Ordering is not maintained between the successive allocation/deallocation of WC buffers (for example, writes to WC buffer 1 followed by writes to WC buffer 2 may appear as buffer 2 followed by buffer 1 on the system bus). When a WC buffer is evicted to memory as partial writes there is no guaranteed ordering between successive partial writes (for example, a partial write for chunk 2 may appear on the bus before the partial write for chunk 1 or vice versa).

The only elements of WC propagation to the system bus that are guaranteed are those provided by transaction atomicity. For example, with a P6 family processor, a completely full WC buffer will always be propagated as a single 32-bit burst transaction using any chunk order. In a WC buffer eviction where data will be evicted as partials, all data contained in the same chunk (0 mod 8 aligned) will be propagated simultaneously. Likewise, for more recent processors starting with those based on Intel NetBurst microarchitectures, a full WC buffer will always be propagated as a single burst transactions, using any chunk order within a transaction. For partial buffer propagations, all data contained in the same chunk will be propagated simultaneously.

12.3.2 Choosing a Memory Type

The simplest system memory model does not use memory-mapped I/O with read or write side effects, does not include a frame buffer, and uses the write-back memory type for all memory. An I/O agent can perform direct memory access (DMA) to write-back memory and the cache protocol maintains cache coherency.

A system can use strong uncacheable memory for other memory-mapped I/O, and should always use strong uncacheable memory for memory-mapped I/O with read side effects.

Dual-ported memory can be considered a write side effect, making relatively prompt writes desirable, because those writes cannot be observed at the other port until they reach the memory agent. A system can use strong uncacheable, uncacheable, write-through, or write-combining memory for frame buffers or dual-ported memory that contains pixel values displayed on a screen. Frame buffer memory is typically large (a few megabytes) and is usually written more than it is read by the processor. Using strong uncacheable memory for a frame buffer generates very large amounts of bus traffic, because operations on the entire buffer are implemented using partial writes rather than line writes. Using write-through memory for a frame buffer can displace almost all other useful cached

lines in the processor's L2 and L3 caches and L1 data cache. Therefore, systems should use write-combining memory for frame buffers whenever possible.

Software can use page-level cache control, to assign appropriate effective memory types when software will not access data structures in ways that benefit from write-back caching. For example, software may read a large data structure once and not access the structure again until the structure is rewritten by another agent. Such a large data structure should be marked as uncacheable, or reading it will evict cached lines that the processor will be referencing again.

A similar example would be a write-only data structure that is written to (to export the data to another agent), but never read by software. Such a structure can be marked as uncacheable, because software never reads the values that it writes (though as uncacheable memory, it will be written using partial writes, while as write-back memory, it will be written using line writes, which may not occur until the other agent reads the structure and triggers implicit write-backs).

On the Pentium III, Pentium 4, and more recent processors, new instructions are provided that give software greater control over the caching, prefetching, and the write-back characteristics of data. These instructions allow software to use weakly ordered or processor ordered memory types to improve processor performance, but when necessary to force strong ordering on memory reads and/or writes. They also allow software greater control over the caching of data. For a description of these instructions and their intended use, see Section 12.5.5, "Cache Management Instructions."

12.3.3 Code Fetches in Uncacheable Memory

Programs may execute code from uncacheable (UC) memory, but the implications are different from accessing data in UC memory. When doing code fetches, the processor never transitions from cacheable code to UC code speculatively. It also never speculatively fetches branch targets that result in UC code.

The processor may fetch the same UC cache line multiple times in order to decode an instruction once. It may decode consecutive UC instructions in a cacheline without fetching between each instruction. It may also fetch additional cachelines from the same or a consecutive 4-KByte page in order to decode one non-speculative UC instruction (this can be true even when the instruction is contained fully in one line).

Because of the above and because cacheline sizes may change in future processors, software should avoid placing memory-mapped I/O with read side effects in the same page or in a subsequent page used to execute UC code.

12.4 CACHE CONTROL PROTOCOL

The following section describes the cache control protocol currently defined for the Intel 64 and IA-32 architectures.

In the L1 data cache and in the L2/L3 unified caches, the MESI (modified, exclusive, shared, invalid) cache protocol maintains consistency with caches of other processors. The L1 data cache and the L2/L3 unified caches have two MESI status flags per cache line. Each line can be marked as being in one of the states defined in Table 12-4. In general, the operation of the MESI protocol is transparent to programs.

Table 12-4. MESI Cache Line States

Cache Line State	M (Modified)	E (Exclusive)	S (Shared)	I (Invalid)
This cache line is valid?	Yes	Yes	Yes	No
The memory copy is...	Out of date	Valid	Valid	—
Copies exist in caches of other processors?	No	No	Maybe	Maybe
A write to this line ...	Does not go to the system bus.	Does not go to the system bus.	Causes the processor to gain exclusive ownership of the line.	Goes directly to the system bus.

The L1 instruction cache in P6 family processors implements only the "SI" part of the MESI protocol, because the instruction cache is not writable. The instruction cache monitors changes in the data cache to maintain consistency between the caches when instructions are modified. See Section 12.6, "Self-Modifying Code," for more information on the implications of caching instructions.

12.5 CACHE CONTROL

The Intel 64 and IA-32 architectures provide a variety of mechanisms for controlling the caching of data and instructions and for controlling the ordering of reads and writes between the processor, the caches, and memory. These mechanisms can be divided into two groups:

- **Cache control registers and bits** — The Intel 64 and IA-32 architectures define several dedicated registers and various bits within control registers and page- and directory-table entries that control the caching system memory locations in the L1, L2, and L3 caches. These mechanisms control the caching of virtual memory pages and of regions of physical memory.
- **Cache control and memory ordering instructions** — The Intel 64 and IA-32 architectures provide several instructions that control the caching of data, the ordering of memory reads and writes, and the prefetching of data. These instructions allow software to control the caching of specific data structures, to control memory coherency for specific locations in memory, and to force strong memory ordering at specific locations in a program.

The following sections describe these two groups of cache control mechanisms.

12.5.1 Cache Control Registers and Bits

Figure 12-3 depicts cache-control mechanisms in IA-32 processors. Other than for the matter of memory address space, these work the same in Intel 64 processors.

The Intel 64 and IA-32 architectures provide the following cache-control registers and bits for use in enabling or restricting caching to various pages or regions in memory:

- **CD flag, bit 30 of control register CR0** — Controls caching of system memory locations (see Section 2.5, "Control Registers"). If the CD flag is clear, caching is enabled for the whole of system memory, but may be restricted for individual pages or regions of memory by other cache-control mechanisms. When the CD flag is set, caching is restricted in the processor's caches (cache hierarchy) for the P6 and more recent processor families and prevented for the Pentium processor (see note below). With the CD flag set, however, the caches will still respond to snoop traffic. Caches should be explicitly flushed to ensure memory coherency. For highest processor performance, both the CD and the NW flags in control register CR0 should be cleared. Table 12-5 shows the interaction of the CD and NW flags.

  The effect of setting the CD flag is somewhat different for processor families starting with P6 family than the Pentium processor (see Table 12-5). To ensure memory coherency after the CD flag is set, the caches should be explicitly flushed (see Section 12.5.3, "Preventing Caching"). Setting the CD flag for the P6 and more recent processor families modifies cache line fill and update behavior. Also, setting the CD flag on these processors do not force strict ordering of memory accesses unless the MTRRs are disabled and/or all memory is referenced as uncached (see Section 9.2.5, "Strengthening or Weakening the Memory-Ordering Model").

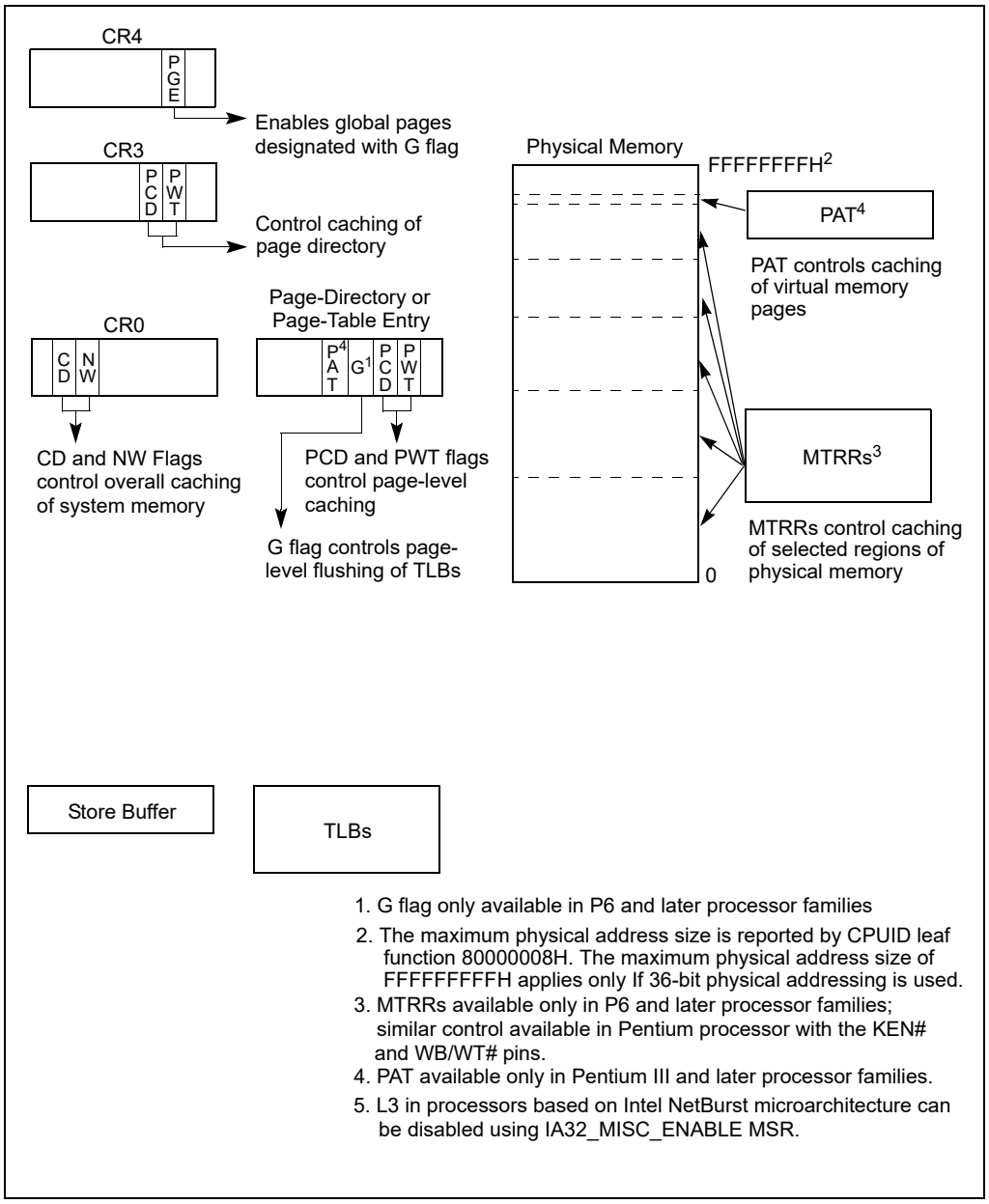

Figure 12-3. Cache-Control Registers and Bits Available in Intel 64 and IA-32 Processors

Table 12-5. Cache Operating Modes

CD	NW	Caching and Read/Write Policy	L1	L2/L3[1]
0	0	Normal Cache Mode. Highest performance cache operation.		
		▪ Read hits access the cache; read misses may cause replacement.	Yes	Yes
		▪ Write hits update the cache.	Yes	Yes
		▪ Only writes to shared lines and write misses update system memory.	Yes	Yes
		▪ Write misses cause cache line fills.	Yes	Yes
		▪ Write hits can change shared lines to modified under control of the MTRRs and with associated read invalidation cycle.	Yes	
		▪ (Pentium processor only.) Write misses do not cause cache line fills.	Yes	
		▪ (Pentium processor only.) Write hits can change shared lines to exclusive under control of WB/WT#.	Yes	
		▪ Invalidation is allowed.		
		▪ External snoop traffic is supported.	Yes	Yes
			Yes	Yes
0	1	Invalid setting.		
		Generates a general-protection exception (#GP) with an error code of 0.	NA	NA
1	0	No-fill Cache Mode. Memory coherency is maintained.[3]		
		▪ (Pentium 4 and later processor families.) State of processor after a power up or reset.	Yes	Yes
		▪ Read hits access the cache; read misses do not cause replacement (see Pentium 4 and Intel Xeon processors reference below).	Yes	Yes
		▪ Write hits update the cache.		
		▪ Only writes to shared lines and write misses update system memory.	Yes	Yes
			Yes	Yes
		▪ Write misses access memory.	Yes	Yes
		▪ Write hits can change shared lines to exclusive under control of the MTRRs and with associated read invalidation cycle.	Yes	Yes
		▪ (Pentium processor only.) Write hits can change shared lines to exclusive under control of the WB/WT#.	Yes	
		▪ (P6 and later processor families only.) Strict memory ordering is not enforced unless the MTRRs are disabled and/or all memory is referenced as uncached (see Section 7.2.4., "Strengthening or Weakening the Memory Ordering Model").	Yes	Yes
		▪ Invalidation is allowed.		
		▪ External snoop traffic is supported.	Yes	Yes
			Yes	Yes
1	1	Memory coherency is not maintained.[2, 3]		
		▪ (P6 family and Pentium processors.) State of the processor after a power up or reset.	Yes	Yes
		▪ Read hits access the cache; read misses do not cause replacement.		
		▪ Write hits update the cache and change exclusive lines to modified.	Yes	Yes
			Yes	Yes
		▪ Shared lines remain shared after write hit.	Yes	Yes
		▪ Write misses access memory.	Yes	Yes
		▪ Invalidation is inhibited when snooping; but is allowed with INVD and WBINVD instructions.	Yes	Yes
		▪ External snoop traffic is supported.		
			No	Yes

NOTES:

1. The L2/L3 column in this table is definitive for the Pentium 4, Intel Xeon, and P6 family processors. It is intended to represent what could be implemented in a system based on a Pentium processor with an external, platform specific, write-back L2 cache.
2. The Pentium 4 and more recent processor families do not support this mode; setting the CD and NW bits to 1 selects the no-fill cache mode.
3. Not supported In Intel Atom processors. If CD = 1 in an Intel Atom processor, caching is disabled.

- **NW flag, bit 29 of control register CR0** — Controls the write policy for system memory locations (see Section 2.5, "Control Registers"). If the NW and CD flags are clear, write-back is enabled for the whole of system memory, but may be restricted for individual pages or regions of memory by other cache-control mechanisms. Table 12-5 shows how the other combinations of CD and NW flags affects caching.

NOTES

For the Pentium 4 and Intel Xeon processors, the NW flag is a don't care flag; that is, when the CD flag is set, the processor uses the no-fill cache mode, regardless of the setting of the NW flag.

For Intel Atom processors, the NW flag is a don't care flag; that is, when the CD flag is set, the processor disables caching, regardless of the setting of the NW flag.

For the Pentium processor, when the L1 cache is disabled (the CD and NW flags in control register CR0 are set), external snoops are accepted in DP (dual-processor) systems and inhibited in uniprocessor systems.

When snoops are inhibited, address parity is not checked and APCHK# is not asserted for a corrupt address; however, when snoops are accepted, address parity is checked and APCHK# is asserted for corrupt addresses.

- **PCD and PWT flags in paging-structure entries** — Control the memory type used to access paging structures and pages (see Section 4.9, "Paging and Memory Typing").
- **PCD and PWT flags in control register CR3** — Control the memory type used to access the first paging structure of the current paging-structure hierarchy (see Section 4.9, "Paging and Memory Typing").
- **G (global) flag in the page-directory and page-table entries (introduced to the IA-32 architecture in the P6 family processors)** — Controls the flushing of TLB entries for individual pages. See Section 4.10, "Caching Translation Information," for more information about this flag.
- **PGE (page global enable) flag in control register CR4** — Enables the establishment of global pages with the G flag. See Section 4.10, "Caching Translation Information," for more information about this flag.
- **Memory type range registers (MTRRs) (introduced in P6 family processors)** — Control the type of caching used in specific regions of physical memory. Any of the caching types described in Section 12.3, "Methods of Caching Available," can be selected. See Section 12.11, "Memory Type Range Registers (MTRRs)," for a detailed description of the MTRRs.
- **Page Attribute Table (PAT) MSR (introduced in the Pentium III processor)** — Extends the memory typing capabilities of the processor to permit memory types to be assigned on a page-by-page basis (see Section 12.12, "Page Attribute Table (PAT)").
- **Third-Level Cache Disable flag, bit 6 of the IA32_MISC_ENABLE MSR (Available only in processors based on Intel NetBurst microarchitecture)** — Allows the L3 cache to be disabled and enabled, independently of the L1 and L2 caches.
- **KEN# and WB/WT# pins (Pentium processor)** — Allow external hardware to control the caching method used for specific areas of memory. They perform similar (but not identical) functions to the MTRRs in the P6 family processors.
- **PCD and PWT pins (Pentium processor)** — These pins (which are associated with the PCD and PWT flags in control register CR3 and in the page-directory and page-table entries) permit caching in an external L2 cache to be controlled on a page-by-page basis, consistent with the control exercised on the L1 cache of these processors. The P6 and more recent processor families do not provide these pins because the L2 cache in internal to the chip package.

12.5.2 Precedence of Cache Controls

The cache control flags and MTRRs operate hierarchically for restricting caching. That is, if the CD flag is set, caching is prevented globally (see Table 12-5). If the CD flag is clear, the page-level cache control flags and/or the MTRRs can be used to restrict caching. If there is an overlap of page-level and MTRR caching controls, the mechanism that prevents caching has precedence. For example, if an MTRR makes a region of system memory uncacheable, a page-level caching control cannot be used to enable caching for a page in that region. The converse is also

true; that is, if a page-level caching control designates a page as uncacheable, an MTRR cannot be used to make the page cacheable.

In cases where there is a overlap in the assignment of the write-back and write-through caching policies to a page and a region of memory, the write-through policy takes precedence. The write-combining policy (which can only be assigned through an MTRR or the PAT) takes precedence over either write-through or write-back.

The selection of memory types at the page level varies depending on whether PAT is being used to select memory types for pages, as described in the following sections.

On processors based on Intel NetBurst microarchitecture, the third-level cache can be disabled by bit 6 of the IA32_MISC_ENABLE MSR. Using IA32_MISC_ENABLE[bit 6] takes precedence over the CD flag, MTRRs, and PAT for the L3 cache in those processors. That is, when the third-level cache disable flag is set (cache disabled), the other cache controls have no affect on the L3 cache; when the flag is clear (enabled), the cache controls have the same affect on the L3 cache as they have on the L1 and L2 caches.

IA32_MISC_ENABLE[bit 6] is not supported in Intel Core i7 processors, nor processors based on Intel Core, and Intel Atom microarchitectures.

12.5.2.1 Selecting Memory Types for Pentium Pro and Pentium II Processors

The Pentium Pro and Pentium II processors do not support the PAT. Here, the effective memory type for a page is selected with the MTRRs and the PCD and PWT bits in the page-table or page-directory entry for the page. Table 12-6 describes the mapping of MTRR memory types and page-level caching attributes to effective memory types, when normal caching is in effect (the CD and NW flags in control register CR0 are clear). Combinations that appear in gray are implementation-defined for the Pentium Pro and Pentium II processors. System designers are encouraged to avoid these implementation-defined combinations.

Table 12-6. Effective Page-Level Memory Type for Pentium Pro and Pentium II Processors

MTRR Memory Type[1]	PCD Value	PWT Value	Effective Memory Type
UC	X	X	UC
WC	0	0	WC
	0	1	WC
	1	0	WC
	1	1	UC
WT	0	X	WT
	1	X	UC
WP	0	0	WP
	0	1	WP
	1	0	WC
	1	1	UC
WB	0	0	WB
	0	1	WT
	1	X	UC

NOTE:

1. These effective memory types also apply to the Pentium 4, Intel Xeon, and Pentium III processors when the PAT bit is not used (set to 0) in page-table and page-directory entries.

When normal caching is in effect, the effective memory type shown in Table 12-6 is determined using the following rules:

1. If the PCD and PWT attributes for the page are both 0, then the effective memory type is identical to the MTRR-defined memory type.

2. If the PCD flag is set, then the effective memory type is UC.
3. If the PCD flag is clear and the PWT flag is set, the effective memory type is WT for the WB memory type and the MTRR-defined memory type for all other memory types.
4. Setting the PCD and PWT flags to opposite values is considered model-specific for the WP and WC memory types and architecturally-defined for the WB, WT, and UC memory types.

12.5.2.2 Selecting Memory Types for Pentium III and More Recent Processor Families

The Intel Core 2 Duo, Intel Atom, Intel Core Duo, Intel Core Solo, Pentium M, Pentium 4, Intel Xeon, and Pentium III processors use the PAT to select effective page-level memory types. Here, a memory type for a page is selected by the MTRRs and the value in a PAT entry that is selected with the PAT, PCD, and PWT bits in a page-table or page-directory entry (see Section 12.12.3, "Selecting a Memory Type from the PAT"). Table 12-7 describes the mapping of MTRR memory types and PAT entry types to effective memory types, when normal caching is in effect (the CD and NW flags in control register CR0 are clear).

Table 12-7. Effective Page-Level Memory Types for Pentium III and More Recent Processor Families

MTRR Memory Type	PAT Entry Value	Effective Memory Type
UC	UC	UC[1]
	UC-	UC[1]
	WC	WC
	WT	UC[1]
	WB	UC[1]
	WP	UC[1]
WC	UC	UC[2]
	UC-	WC
	WC	WC
	WT	UC[2,3]
	WB	WC
	WP	UC[2,3]
WT	UC	UC[2]
	UC-	UC[2]
	WC	WC
	WT	WT
	WB	WT
	WP	WP[3]
WB	UC	UC[2]
	UC-	UC[2]
	WC	WC
	WT	WT
	WB	WB
	WP	WP

Table 12-7. Effective Page-Level Memory Types for Pentium III and More Recent Processor Families (Contd.)

MTRR Memory Type	PAT Entry Value	Effective Memory Type
WP	UC	UC[2]
	UC-	WC[3]
	WC	WC
	WT	WT[3]
	WB	WP
	WP	WP

NOTES:

1. The UC attribute comes from the MTRRs and the processors are not required to snoop their caches since the data could never have been cached. This attribute is preferred for performance reasons.
2. The UC attribute came from the page-table or page-directory entry and processors are required to check their caches because the data may be cached due to page aliasing, which is not recommended.
3. These combinations were specified as "undefined" in previous editions of the *Intel® 64 and IA-32 Architectures Software Developer's Manual*. However, all processors that support both the PAT and the MTRRs determine the effective page-level memory types for these combinations as given.

12.5.2.3 Writing Values Across Pages with Different Memory Types

If two adjoining pages in memory have different memory types, and a word or longer operand is written to a memory location that crosses the page boundary between those two pages, the operand might be written to memory twice. This action does not present a problem for writes to actual memory; however, if a device is mapped to the memory space assigned to the pages, the device might malfunction.

12.5.3 Preventing Caching

To disable the L1, L2, and L3 caches after they have been enabled and have received cache fills, perform the following steps:

1. Enter the no-fill cache mode. (Set the CD flag in control register CR0 to 1 and the NW flag to 0.
2. Flush all caches using the WBINVD instruction.
3. Disable the MTRRs and set the default memory type to uncached or set all MTRRs for the uncached memory type (see the discussion of the discussion of the TYPE field and the E flag in Section 12.11.2.1, "IA32_MTRR_DEF_TYPE MSR").

The caches must be flushed (step 2) after the CD flag is set to ensure system memory coherency. If the caches are not flushed, cache hits on reads will still occur and data will be read from valid cache lines.

The intent of the three separate steps listed above address three distinct requirements: (i) discontinue new data replacing existing data in the cache (ii) ensure data already in the cache are evicted to memory, (iii) ensure subsequent memory references observe UC memory type semantics. Different processor implementation of caching control hardware may allow some variation of software implementation of these three requirements. See note below.

NOTES

Setting the CD flag in control register CR0 modifies the processor's caching behavior as indicated in Table 12-5, but setting the CD flag alone may not be sufficient across all processor families to force the effective memory type for all physical memory to be UC nor does it force strict memory ordering, due to hardware implementation variations across different processor families. To force the UC memory type and strict memory ordering on all of physical memory, it is sufficient to either program the MTRRs for all physical memory to be UC memory type or disable all MTRRs.

For the Pentium 4 and Intel Xeon processors, after the sequence of steps given above has been executed, the cache lines containing the code between the end of the WBINVD instruction and before the MTRRS have actually been disabled may be retained in the cache hierarchy. Here, to

remove code from the cache completely, a second WBINVD instruction must be executed after the MTRRs have been disabled.

For Intel Atom processors, setting the CD flag forces all physical memory to observe UC semantics (without requiring memory type of physical memory to be set explicitly). Consequently, software does not need to issue a second WBINVD as some other processor generations might require.

12.5.4 Disabling and Enabling the L3 Cache

On processors based on Intel NetBurst microarchitecture, the third-level cache can be disabled by bit 6 of the IA32_MISC_ENABLE MSR. The third-level cache disable flag (bit 6 of the IA32_MISC_ENABLE MSR) allows the L3 cache to be disabled and enabled, independently of the L1 and L2 caches. Prior to using this control to disable or enable the L3 cache, software should disable and flush all the processor caches, as described earlier in Section 12.5.3, "Preventing Caching," to prevent of loss of information stored in the L3 cache. After the L3 cache has been disabled or enabled, caching for the whole processor can be restored.

Newer Intel 64 processor with L3 do not support IA32_MISC_ENABLE[bit 6], the procedure described in Section 12.5.3, "Preventing Caching," apply to the entire cache hierarchy.

12.5.5 Cache Management Instructions

The Intel 64 and IA-32 architectures provide several instructions for managing the L1, L2, and L3 caches. The INVD and WBINVD instructions are privileged instructions and operate on the L1, L2, and L3 caches as a whole. The PREFETCHh, CLFLUSH, and CLFLUSHOPT instructions and the non-temporal move instructions (MOVNTI, MOVNTQ, MOVNTDQ, MOVNTPS, and MOVNTPD) offer more granular control over caching, and are available to all privileged levels.

The INVD and WBINVD instructions are used to invalidate the contents of the L1, L2, and L3 caches. The INVD instruction invalidates all internal cache entries, then generates a special-function bus cycle that indicates that external caches also should be invalidated. The INVD instruction should be used with care. It does not force a write-back of modified cache lines; therefore, data stored in the caches and not written back to system memory will be lost. Unless there is a specific requirement or benefit to invalidating the caches without writing back the modified lines (such as, during testing or fault recovery where cache coherency with main memory is not a concern), software should use the WBINVD instruction.

The WBINVD instruction first writes back any modified lines in all the internal caches, then invalidates the contents of both the L1, L2, and L3 caches. It ensures that cache coherency with main memory is maintained regardless of the write policy in effect (that is, write-through or write-back). Following this operation, the WBINVD instruction generates one (P6 family processors) or two (Pentium and Intel486 processors) special-function bus cycles to indicate to external cache controllers that write-back of modified data followed by invalidation of external caches should occur. The amount of time or cycles for WBINVD to complete will vary due to the size of different cache hierarchies and other factors. As a consequence, the use of the WBINVD instruction can have an impact on interrupt/event response time.

The PREFETCH*h* instructions allow a program to suggest to the processor that a cache line from a specified location in system memory be prefetched into the cache hierarchy (see Section 12.8, "Explicit Caching").

The CLFLUSH and CLFLUSHOPT instructions allow selected cache lines to be flushed from memory. These instructions give a program the ability to explicitly free up cache space, when it is known that cached section of system memory will not be accessed in the near future.

The non-temporal move instructions (MOVNTI, MOVNTQ, MOVNTDQ, MOVNTPS, and MOVNTPD) allow data to be moved from the processor's registers directly into system memory without being also written into the L1, L2, and/or L3 caches. These instructions can be used to prevent cache pollution when operating on data that is going to be modified only once before being stored back into system memory. These instructions operate on data in the general-purpose, MMX, and XMM registers.

12.5.6 L1 Data Cache Context Mode

L1 data cache context mode is a feature of processors based on the Intel NetBurst microarchitecture that support Intel Hyper-Threading Technology. When CPUID.1:ECX[bit 10] = 1, the processor supports setting L1 data cache context mode using the L1 data cache context mode flag (IA32_MISC_ENABLE[bit 24]). Selectable modes are adaptive mode (default) and shared mode.

The BIOS is responsible for configuring the L1 data cache context mode.

12.5.6.1 Adaptive Mode

Adaptive mode facilitates L1 data cache sharing between logical processors. When running in adaptive mode, the L1 data cache is shared across logical processors in the same core if:

- CR3 control registers for logical processors sharing the cache are identical.
- The same paging mode is used by logical processors sharing the cache.

In this situation, the entire L1 data cache is available to each logical processor (instead of being competitively shared).

If CR3 values are different for the logical processors sharing an L1 data cache or the logical processors use different paging modes, processors compete for cache resources. This reduces the effective size of the cache for each logical processor. Aliasing of the cache is not allowed (which prevents data thrashing).

12.5.6.2 Shared Mode

In shared mode, the L1 data cache is competitively shared between logical processors. This is true even if the logical processors use identical CR3 registers and paging modes.

In shared mode, linear addresses in the L1 data cache can be aliased, meaning that one linear address in the cache can point to different physical locations. The mechanism for resolving aliasing can lead to thrashing. For this reason, IA32_MISC_ENABLE[bit 24] = 0 is the preferred configuration for processors based on the Intel NetBurst microarchitecture that support Intel Hyper-Threading Technology.

12.6 SELF-MODIFYING CODE

A write to a memory location in a code segment that is currently cached in the processor causes the associated cache line (or lines) to be invalidated. This check is based on the physical address of the instruction. In addition, the P6 family and Pentium processors check whether a write to a code segment may modify an instruction that has been prefetched for execution. If the write affects a prefetched instruction, the prefetch queue is invalidated. This latter check is based on the linear address of the instruction. For the Pentium 4 and Intel Xeon processors, a write or a snoop of an instruction in a code segment, where the target instruction is already decoded and resident in the trace cache, invalidates the entire trace cache. The latter behavior means that programs that self-modify code can cause severe degradation of performance when run on the Pentium 4 and Intel Xeon processors.

In practice, the check on linear addresses should not create compatibility problems among IA-32 processors. Applications that include self-modifying code use the same linear address for modifying and fetching the instruction. Systems software, such as a debugger, that might possibly modify an instruction using a different linear address than that used to fetch the instruction, will execute a serializing operation, such as a CPUID instruction, before the modified instruction is executed, which will automatically resynchronize the instruction cache and prefetch queue. (See Section 9.1.3, “Handling Self- and Cross-Modifying Code,” for more information about the use of self-modifying code.)

For Intel486 processors, a write to an instruction in the cache will modify it in both the cache and memory, but if the instruction was prefetched before the write, the old version of the instruction could be the one executed. To prevent the old instruction from being executed, flush the instruction prefetch unit by coding a jump instruction immediately after any write that modifies an instruction.

12.7 IMPLICIT CACHING (PENTIUM 4, INTEL XEON, AND P6 FAMILY PROCESSORS)

Implicit caching occurs when a memory element is made potentially cacheable, although the element may never have been accessed in the normal von Neumann sequence. Implicit caching occurs on the P6 and more recent processor families due to aggressive prefetching, branch prediction, and TLB miss handling. Implicit caching is an extension of the behavior of existing Intel386, Intel486, and Pentium processor systems, since software running on these processor families also has not been able to deterministically predict the behavior of instruction prefetch.

To avoid problems related to implicit caching, the operating system must explicitly invalidate the cache when changes are made to cacheable data that the cache coherency mechanism does not automatically handle. This includes writes to dual-ported or physically aliased memory boards that are not detected by the snooping mechanisms of the processor, and changes to page- table entries in memory.

The code in Example 12-1 shows the effect of implicit caching on page-table entries. The linear address F000H points to physical location B000H (the page-table entry for F000H contains the value B000H), and the page-table entry for linear address F000 is PTE_F000.

Example 12-1. Effect of Implicit Caching on Page-Table Entries

```
mov EAX, CR3; Invalidate the TLB
mov CR3, EAX; by copying CR3 to itself
mov PTE_F000, A000H; Change F000H to point to A000H
mov EBX, [F000H];
```

Because of speculative execution in the P6 and more recent processor families, the last MOV instruction performed would place the value at physical location B000H into EBX, rather than the value at the new physical address A000H. This situation is remedied by placing a TLB invalidation between the load and the store.

12.8 EXPLICIT CACHING

The Pentium III processor introduced four new instructions, the PREFETCH*h* instructions, that provide software with explicit control over the caching of data. These instructions provide "hints" to the processor that the data requested by a PREFETCH*h* instruction should be read into cache hierarchy now or as soon as possible, in anticipation of its use. The instructions provide different variations of the hint that allow selection of the cache level into which data will be read.

The PREFETCH*h* instructions can help reduce the long latency typically associated with reading data from memory and thus help prevent processor "stalls." However, these instructions should be used judiciously. Overuse can lead to resource conflicts and hence reduce the performance of an application. Also, these instructions should only be used to prefetch data from memory; they should not be used to prefetch instructions. For more detailed information on the proper use of the prefetch instruction, refer to Chapter 7, "Optimizing Cache Usage," in the *Intel® 64 and IA-32 Architectures Optimization Reference Manual*.

12.9 INVALIDATING THE TRANSLATION LOOKASIDE BUFFERS (TLBS)

The processor updates its address translation caches (TLBs) transparently to software. Several mechanisms are available, however, that allow software and hardware to invalidate the TLBs either explicitly or as a side effect of another operation. Most details are given in Section 4.10.4, "Invalidation of TLBs and Paging-Structure Caches." In addition, the following operations invalidate all TLB entries, irrespective of the setting of the G flag:

- Asserting or de-asserting the FLUSH# pin.
- (Pentium 4, Intel Xeon, and later processors only.) Writing to an MTRR (with a WRMSR instruction).
- Writing to control register CR0 to modify the PG or PE flag.

- (Pentium 4, Intel Xeon, and later processors only.) Writing to control register CR4 to modify the PSE, PGE, or PAE flag.
- Writing to control register CR4 to change the PCIDE flag from 1 to 0.

See Section 4.10, "Caching Translation Information," for additional information about the TLBs.

12.10 STORE BUFFER

Intel 64 and IA-32 processors temporarily store each write (store) to memory in a store buffer. The store buffer improves processor performance by allowing the processor to continue executing instructions without having to wait until a write to memory and/or to a cache is complete. It also allows writes to be delayed for more efficient use of memory-access bus cycles.

In general, the existence of the store buffer is transparent to software, even in systems that use multiple processors. The processor ensures that write operations are always carried out in program order. It also ensures that the contents of the store buffer are always drained to memory in the following situations:

- When an exception or interrupt is generated.
- (P6 and more recent processor families only) When a serializing instruction is executed.
- When an I/O instruction is executed.
- When a LOCK operation is performed.
- (P6 and more recent processor families only) When a BINIT operation is performed.
- (Pentium III, and more recent processor families only) When using an SFENCE instruction to order stores.
- (Pentium 4 and more recent processor families only) When using an MFENCE instruction to order stores.

The discussion of write ordering in Section 9.2, "Memory Ordering," gives a detailed description of the operation of the store buffer.

12.11 MEMORY TYPE RANGE REGISTERS (MTRRS)

The following section pertains only to the P6 and more recent processor families.

The memory type range registers (MTRRs) provide a mechanism for associating the memory types (see Section 12.3, "Methods of Caching Available") with physical-address ranges in system memory. They allow the processor to optimize operations for different types of memory such as RAM, ROM, frame-buffer memory, and memory-mapped I/O devices. They also simplify system hardware design by eliminating the memory control pins used for this function on earlier IA-32 processors and the external logic needed to drive them.

The MTRR mechanism allows multiple ranges to be defined in physical memory, and it defines a set of model-specific registers (MSRs) for specifying the type of memory that is contained in each range. Table 12-8 shows the memory types that can be specified and their properties; Figure 12-4 shows the mapping of physical memory with MTRRs. See Section 12.3, "Methods of Caching Available," for a more detailed description of each memory type.

Following a hardware reset, the P6 and more recent processor families disable all the fixed and variable MTRRs, which in effect makes all of physical memory uncacheable. Initialization software should then set the MTRRs to a specific, system-defined memory map. Typically, the BIOS (basic input/output system) software configures the MTRRs. The operating system or executive is then free to modify the memory map using the normal page-level cacheability attributes.

In a multiprocessor system using a processor in the P6 family or a more recent family, each processor MUST use the identical MTRR memory map so that software will have a consistent view of memory.

NOTE

In multiple processor systems, the operating system must maintain MTRR consistency between all the processors in the system (that is, all processors must use the same MTRR values). The P6 and more recent processor families provide no hardware support for maintaining this consistency.

Table 12-8. Memory Types That Can Be Encoded in MTRRs

Memory Type and Mnemonic	Encoding in MTRR
Uncacheable (UC)	00H
Write Combining (WC)	01H
Reserved*	02H
Reserved*	03H
Write-through (WT)	04H
Write-protected (WP)	05H
Writeback (WB)	06H
Reserved*	7H through FFH

NOTE:

* Use of these encodings results in a general-protection exception (#GP).

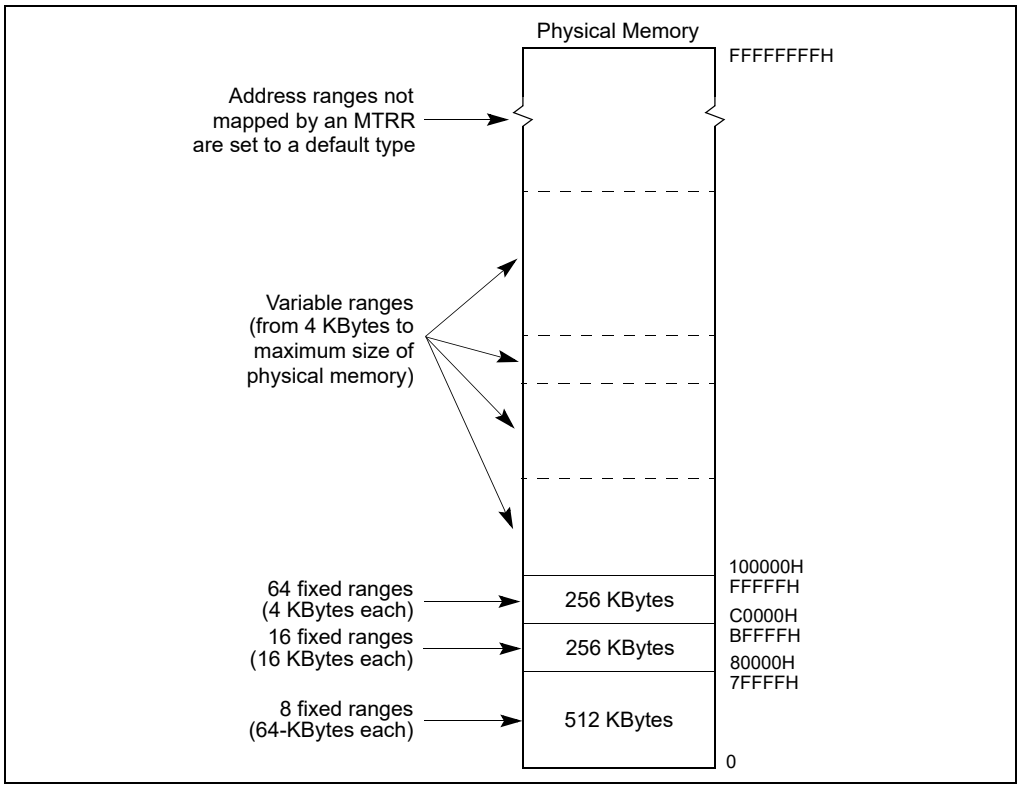

Figure 12-4. Mapping Physical Memory With MTRRs

12.11.1 MTRR Feature Identification

The availability of the MTRR feature is model-specific. Software can determine if MTRRs are supported on a processor by executing the CPUID instruction and reading the state of the MTRR flag (bit 12) in the feature information register (EDX).

If the MTRR flag is set (indicating that the processor implements MTRRs), additional information about MTRRs can be obtained from the 64-bit IA32_MTRRCAP MSR (named MTRRcap MSR for the P6 family processors). The IA32_MTRRCAP MSR is a read-only MSR that can be read with the RDMSR instruction. Figure 12-5 shows the contents of the IA32_MTRRCAP MSR. The functions of the flags and field in this register are as follows:

- **VCNT (variable range registers count) field, bits 0 through 7** — Indicates the number of variable ranges implemented on the processor.
- **FIX (fixed range registers supported) flag, bit 8** — Fixed range MTRRs (IA32_MTRR_FIX64K_00000 through IA32_MTRR_FIX4K_0F8000) are supported when set; no fixed range registers are supported when clear.
- **WC (write combining) flag, bit 10** — The write-combining (WC) memory type is supported when set; the WC type is not supported when clear.
- **SMRR (System-Management Range Register) flag, bit 11** — The system-management range register (SMRR) interface is supported when bit 11 is set; the SMRR interface is not supported when clear.

Bit 9 and bits 12 through 63 in the IA32_MTRRCAP MSR are reserved. If software attempts to write to the IA32_MTRRCAP MSR, a general-protection exception (#GP) is generated.

Software must read IA32_MTRRCAP VCNT field to determine the number of variable MTRRs and query other feature bits in IA32_MTRRCAP to determine additional capabilities that are supported in a processor. For example, some processors may report a value of '8' in the VCNT field, other processors may report VCNT with different values.

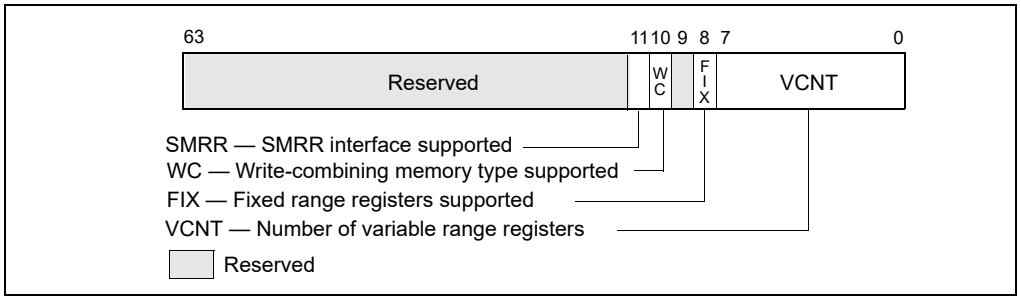

Figure 12-5. IA32_MTRRCAP Register

12.11.2 Setting Memory Ranges with MTRRs

The memory ranges and the types of memory specified in each range are set by three groups of registers: the IA32_MTRR_DEF_TYPE MSR, the fixed-range MTRRs, and the variable range MTRRs. These registers can be read and written to using the RDMSR and WRMSR instructions, respectively. The IA32_MTRRCAP MSR indicates the availability of these registers on the processor (see Section 12.11.1, "MTRR Feature Identification").

12.11.2.1 IA32_MTRR_DEF_TYPE MSR

The IA32_MTRR_DEF_TYPE MSR (named MTRRdefType MSR for the P6 family processors) sets the default properties of the regions of physical memory that are not encompassed by MTRRs. The functions of the flags and field in this register are as follows:

- **Type field, bits 0 through 7** — Indicates the default memory type used for those physical memory address ranges that do not have a memory type specified for them by an MTRR (see Table 12-8 for the encoding of this field). The legal values for this field are 0, 1, 4, 5, and 6. All other values result in a general-protection exception (#GP) being generated.

  Intel recommends the use of the UC (uncached) memory type for all physical memory addresses where memory does not exist. To assign the UC type to nonexistent memory locations, it can either be specified as the default type in the Type field or be explicitly assigned with the fixed and variable MTRRs.

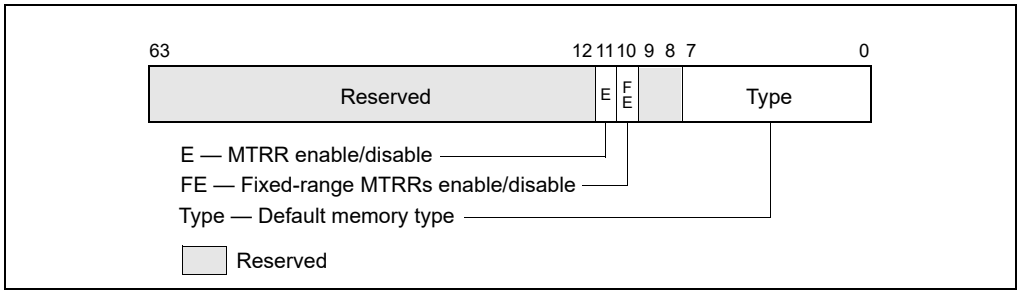

Figure 12-6. IA32_MTRR_DEF_TYPE MSR

- **FE (fixed MTRRs enabled) flag, bit 10** — Fixed-range MTRRs are enabled when set; fixed-range MTRRs are disabled when clear. When the fixed-range MTRRs are enabled, they take priority over the variable-range MTRRs when overlaps in ranges occur. If the fixed-range MTRRs are disabled, the variable-range MTRRs can still be used and can map the range ordinarily covered by the fixed-range MTRRs.
- **E (MTRRs enabled) flag, bit 11** — MTRRs are enabled when set; all MTRRs are disabled when clear, and the UC memory type is applied to all of physical memory. When this flag is set, the FE flag can disable the fixed-range MTRRs; when the flag is clear, the FE flag has no affect. When the E flag is set, the type specified in the default memory type field is used for areas of memory not already mapped by either a fixed or variable MTRR.

Bits 8 and 9, and bits 12 through 63, in the IA32_MTRR_DEF_TYPE MSR are reserved; the processor generates a general-protection exception (#GP) if software attempts to write nonzero values to them.

12.11.2.2 Fixed Range MTRRs

The fixed memory ranges are mapped with 11 fixed-range registers of 64 bits each. Each of these registers is divided into 8-bit fields that are used to specify the memory type for each of the sub-ranges the register controls:

- **Register IA32_MTRR_FIX64K_00000** — Maps the 512-KByte address range from 0H to 7FFFFH. This range is divided into eight 64-KByte sub-ranges.
- **Registers IA32_MTRR_FIX16K_80000 and IA32_MTRR_FIX16K_A0000** — Maps the two 128-KByte address ranges from 80000H to BFFFFH. This range is divided into sixteen 16-KByte sub-ranges, 8 ranges per register.
- **Registers IA32_MTRR_FIX4K_C0000 through IA32_MTRR_FIX4K_F8000** — Maps eight 32-KByte address ranges from C0000H to FFFFFH. This range is divided into sixty-four 4-KByte sub-ranges, 8 ranges per register.

Table 12-9 shows the relationship between the fixed physical-address ranges and the corresponding fields of the fixed-range MTRRs; Table 12-8 shows memory type encoding for MTRRs.

For the P6 family processors, the prefix for the fixed range MTRRs is MTRRfix.

12.11.2.3 Variable Range MTRRs

The Pentium 4, Intel Xeon, and P6 family processors permit software to specify the memory type for m variable-size address ranges, using a pair of MTRRs for each range. The number m of ranges supported is given in bits 7:0 of the IA32_MTRRCAP MSR (see Figure 12-5 in Section 12.11.1).

The first entry in each pair (IA32_MTRR_PHYSBASEn) defines the base address and memory type for the range; the second entry (IA32_MTRR_PHYSMASKn) contains a mask used to determine the address range. The “n” suffix is in the range 0 through m–1 and identifies a specific register pair.

For P6 family processors, the prefixes for these variable range MTRRs are MTRRphysBase and MTRRphysMask.

Table 12-9. Address Mapping for Fixed-Range MTRRs

Address Range (hexadecimal)								MTRR
63 56	55 48	47 40	39 32	31 24	23 16	15 8	7 0	
70000-7FFFF	60000-6FFFF	50000-5FFFF	40000-4FFFF	30000-3FFFF	20000-2FFFF	10000-1FFFF	00000-0FFFF	IA32_MTRR_FIX64K_00000
9C000 9FFFF	98000-9BFFF	94000-97FFF	90000-93FFF	8C000-8FFFF	88000-8BFFF	84000-87FFF	80000-83FFF	IA32_MTRR_FIX16K_80000
BC000 BFFFF	B8000-BBFFF	B4000-B7FFF	B0000-B3FFF	AC000-AFFFF	A8000-ABFFF	A4000-A7FFF	A0000-A3FFF	IA32_MTRR_FIX16K_A0000
C7000 C7FFF	C6000-C6FFF	C5000-C5FFF	C4000-C4FFF	C3000-C3FFF	C2000-C2FFF	C1000-C1FFF	C0000-C0FFF	IA32_MTRR_FIX4K_C0000
CF000 CFFFF	CE000-CEFFF	CD000-CDFFF	CC000-CCFFF	CB000-CBFFF	CA000-CAFFF	C9000-C9FFF	C8000-C8FFF	IA32_MTRR_FIX4K_C8000
D7000 D7FFF	D6000-D6FFF	D5000-D5FFF	D4000-D4FFF	D3000-D3FFF	D2000-D2FFF	D1000-D1FFF	D0000-D0FFF	IA32_MTRR_FIX4K_D0000
DF000 DFFFF	DE000-DEFFF	DD000-DDFFF	DC000-DCFFF	DB000-DBFFF	DA000-DAFFF	D9000-D9FFF	D8000-D8FFF	IA32_MTRR_FIX4K_D8000
E7000 E7FFF	E6000-E6FFF	E5000-E5FFF	E4000-E4FFF	E3000-E3FFF	E2000-E2FFF	E1000-E1FFF	E0000-E0FFF	IA32_MTRR_FIX4K_E0000
EF000 EFFFF	EE000-EEFFF	ED000-EDFFF	EC000-ECFFF	EB000-EBFFF	EA000-EAFFF	E9000-E9FFF	E8000-E8FFF	IA32_MTRR_FIX4K_E8000
F7000 F7FFF	F6000-F6FFF	F5000-F5FFF	F4000-F4FFF	F3000-F3FFF	F2000-F2FFF	F1000-F1FFF	F0000-F0FFF	IA32_MTRR_FIX4K_F0000
FF000 FFFFF	FE000-FEFFF	FD000-FDFFF	FC000-FCFFF	FB000-FBFFF	FA000-FAFFF	F9000-F9FFF	F8000-F8FFF	IA32_MTRR_FIX4K_F8000

Figure 12-7 shows flags and fields in these registers. The functions of these flags and fields are:

- **Type field, bits 0 through 7** — Specifies the memory type for the range (see Table 12-8 for the encoding of this field).
- **PhysBase field, bits 12 through (MAXPHYADDR-1)** — Specifies the base address of the address range. This 24-bit value, in the case where MAXPHYADDR is 36 bits, is extended by 12 bits at the low end to form the base address (this automatically aligns the address on a 4-KByte boundary).
- **PhysMask field, bits 12 through (MAXPHYADDR-1)** — Specifies a mask (24 bits if the maximum physical address size is 36 bits, 28 bits if the maximum physical address size is 40 bits). The mask determines the range of the region being mapped, according to the following relationships:
  - Address_Within_Range AND PhysMask = PhysBase AND PhysMask
  - This value is extended by 12 bits at the low end to form the mask value. For more information: see Section 12.11.3, "Example Base and Mask Calculations."
  - The width of the PhysMask field depends on the maximum physical address size supported by the processor.

    CPUID.80000008H reports the maximum physical address size supported by the processor. If CPUID.80000008H is not available, software may assume that the processor supports a 36-bit physical address size (then PhysMask is 24 bits wide and the upper 28 bits of IA32_MTRR_PHYSMASKn are reserved). See the Note below.
- **V (valid) flag, bit 11** — Enables the register pair when set; disables register pair when clear.

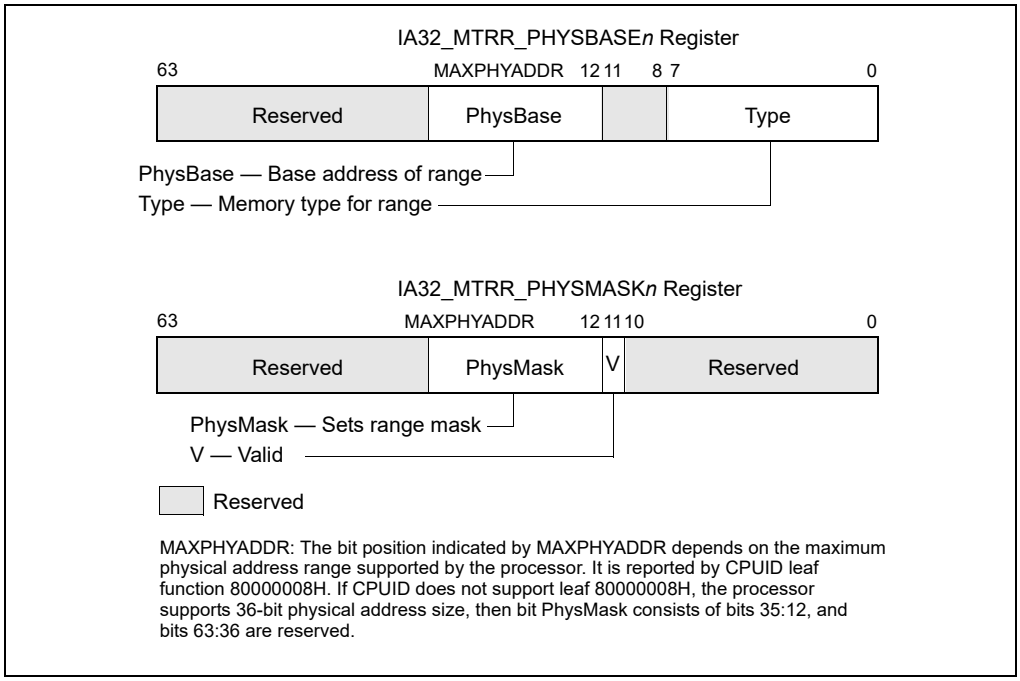

Figure 12-7. IA32_MTRR_PHYSBASE*n* and IA32_MTRR_PHYSMASK*n* Variable-Range Register Pair

All other bits in the IA32_MTRR_PHYSBASE*n* and IA32_MTRR_PHYSMASK*n* registers are reserved; the processor generates a general-protection exception (#GP) if software attempts to write to them.

Some mask values can result in ranges that are not continuous. In such ranges, the area not mapped by the mask value is set to the default memory type, unless some other MTRR specifies a type for that range. Intel does not encourage the use of "discontinuous" ranges.

NOTE

It is possible for software to parse the memory descriptions that BIOS provides by using the ACPI/INT15 e820 interface mechanism. This information then can be used to determine how MTRRs are initialized (for example: allowing the BIOS to define valid memory ranges and the maximum memory range supported by the platform, including the processor).

See Section 12.11.4.1, "MTRR Precedences," for information on overlapping variable MTRR ranges.

12.11.2.4 System-Management Range Register Interface

If IA32_MTRRCAP[bit 11] is set, the processor supports the SMRR interface to restrict access to a specified memory address range used by system-management mode (SMM) software (see Section 32.4.2.1). If the SMRR interface is supported, SMM software is strongly encouraged to use it to protect the SMI code and data stored by SMI handler in the SMRAM region.

The system-management range registers consist of a pair of MSRs (see Figure 12-8). The IA32_SMRR_PHYSBASE MSR defines the base address for the SMRAM memory range and the memory type used to access it in SMM. The IA32_SMRR_PHYSMASK MSR contains a valid bit and a mask that determines the SMRAM address range protected by the SMRR interface. These MSRs may be written only in SMM; an attempt to write them outside of SMM causes a general-protection exception.[1]

Figure 12-8 shows flags and fields in these registers. The functions of these flags and fields are the following:

1. For some processor models, these MSRs can be accessed by RDMSR and WRMSR only if the SMRR interface has been enabled using a model-specific bit in the IA32_FEATURE_CONTROL MSR.

- **Type field, bits 0 through 7** — Specifies the memory type for the range (see Table 12-8 for the encoding of this field).
- **PhysBase field, bits 12 through 31** — Specifies the base address of the address range. The address must be less than 4 GBytes and is automatically aligned on a 4-KByte boundary.
- **PhysMask field, bits 12 through 31** — Specifies a mask that determines the range of the region being mapped, according to the following relationships:
  - Address_Within_Range AND PhysMask = PhysBase AND PhysMask
  - This value is extended by 12 bits at the low end to form the mask value. For more information: see Section 12.11.3, "Example Base and Mask Calculations."
- **V (valid) flag, bit 11** — Enables the register pair when set; disables register pair when clear.

Before attempting to access these SMRR registers, software must test bit 11 in the IA32_MTRRCAP register. If SMRR is not supported, reads from or writes to registers cause general-protection exceptions.

When the valid flag in the IA32_SMRR_PHYSMASK MSR is 1, accesses to the specified address range are treated as follows:

- If the logical processor is in SMM, accesses uses the memory type in the IA32_SMRR_PHYSBASE MSR.
- If the logical processor is not in SMM, write accesses are ignored and read accesses return a fixed value for each byte. The uncacheable memory type (UC) is used in this case.

The above items apply even if the address range specified overlaps with a range specified by the MTRRs.

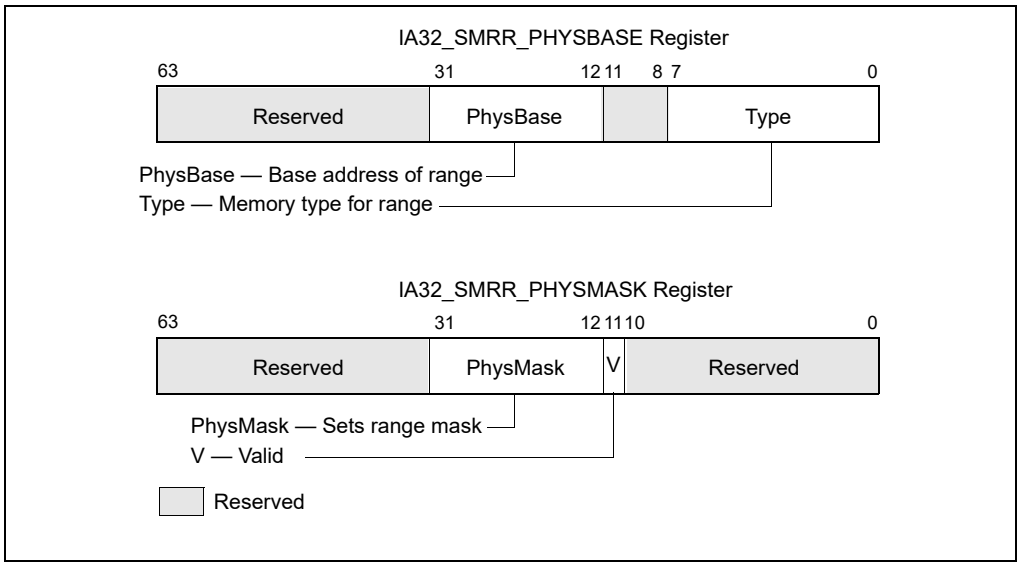

Figure 12-8. IA32_SMRR_PHYSBASE and IA32_SMRR_PHYSMASK SMRR Pair

12.11.3 Example Base and Mask Calculations

The examples in this section apply to processors that support a maximum physical address size of 36 bits. The base and mask values entered in variable-range MTRR pairs are 24-bit values that the processor extends to 36-bits.

For example, to enter a base address of 2 MBytes (200000H) in the IA32_MTRR_PHYSBASE3 register, the 12 least-significant bits are truncated and the value 000200H is entered in the PhysBase field. The same operation must be performed on mask values. For example, to map the address range from 200000H to 3FFFFFH (2 MBytes to 4 MBytes), a mask value of FFFE00000H is required. Again, the 12 least-significant bits of this mask value are truncated, so that the value entered in the PhysMask field of IA32_MTRR_PHYSMASK3 is FFFE00H. This mask is chosen so that when any address in the 200000H to 3FFFFFH range is AND'd with the mask value, it will return the same value as when the base address is AND'd with the mask value (which is 200000H).

To map the address range from 400000H to 7FFFFFH (4 MBytes to 8 MBytes), a base value of 000400H is entered in the PhysBase field and a mask value of FFFC00H is entered in the PhysMask field.

Example 12-2. Setting-Up Memory for a System

Here is an example of setting up the MTRRs for an system. Assume that the system has the following characteristics:

- 96 MBytes of system memory is mapped as write-back memory (WB) for highest system performance.
- A custom 4-MByte I/O card is mapped to uncached memory (UC) at a base address of 64 MBytes. This restriction forces the 96 MBytes of system memory to be addressed from 0 to 64 MBytes and from 68 MBytes to 100 MBytes, leaving a 4-MByte hole for the I/O card.
- An 8-MByte graphics card is mapped to write-combining memory (WC) beginning at address A0000000H.
- The BIOS area from 15 MBytes to 16 MBytes is mapped to UC memory.

The following settings for the MTRRs will yield the proper mapping of the physical address space for this system configuration.

IA32_MTRR_PHYSBASE0 = 0000 0000 0000 0006H
IA32_MTRR_PHYSMASK0 = 0000 000F FC00 0800H
Caches 0-64 MByte as WB cache type.

IA32_MTRR_PHYSBASE1 = 0000 0000 0400 0006H
IA32_MTRR_PHYSMASK1 = 0000 000F FE00 0800H
Caches 64-96 MByte as WB cache type.

IA32_MTRR_PHYSBASE2 = 0000 0000 0600 0006H
IA32_MTRR_PHYSMASK2 = 0000 000F FFC0 0800H
Caches 96-100 MByte as WB cache type.

IA32_MTRR_PHYSBASE3 = 0000 0000 0400 0000H
IA32_MTRR_PHYSMASK3 = 0000 000F FFC0 0800H
Caches 64-68 MByte as UC cache type.

IA32_MTRR_PHYSBASE4 = 0000 0000 00F0 0000H
IA32_MTRR_PHYSMASK4 = 0000 000F FFF0 0800H
Caches 15-16 MByte as UC cache type.

IA32_MTRR_PHYSBASE5 = 0000 0000 A000 0001H
IA32_MTRR_PHYSMASK5 = 0000 000F FF80 0800H
Caches A0000000-A0800000 as WC type.

This MTRR setup uses the ability to overlap any two memory ranges (as long as the ranges are mapped to WB and UC memory types) to minimize the number of MTRR registers that are required to configure the memory environment. This setup also fulfills the requirement that two register pairs are left for operating system usage.

12.11.3.1 Base and Mask Calculations for Greater-Than 36-bit Physical Address Support

For Intel 64 and IA-32 processors that support greater than 36 bits of physical address size, software should query CPUID.80000008H to determine the maximum physical address. See the example.

Example 12-3. Setting-Up Memory for a System with a 40-Bit Address Size

If a processor supports 40-bits of physical address size, then the PhysMask field (in IA32_MTRR_PHYSMASK*n* registers) is 28 bits instead of 24 bits. For this situation, Example 12-2 should be modified as follows:

IA32_MTRR_PHYSBASE0 = 0000 0000 0000 0006H
IA32_MTRR_PHYSMASK0 = 0000 00FF FC00 0800H
Caches 0-64 MByte as WB cache type.

IA32_MTRR_PHYSBASE1 = 0000 0000 0400 0006H
IA32_MTRR_PHYSMASK1 = 0000 00FF FE00 0800H
Caches 64-96 MByte as WB cache type.

IA32_MTRR_PHYSBASE2 = 0000 0000 0600 0006H
IA32_MTRR_PHYSMASK2 = 0000 00FF FFC0 0800H
Caches 96-100 MByte as WB cache type.

IA32_MTRR_PHYSBASE3 = 0000 0000 0400 0000H
IA32_MTRR_PHYSMASK3 = 0000 00FF FFC0 0800H
Caches 64-68 MByte as UC cache type.

IA32_MTRR_PHYSBASE4 = 0000 0000 00F0 0000H
IA32_MTRR_PHYSMASK4 = 0000 00FF FFF0 0800H
Caches 15-16 MByte as UC cache type.

IA32_MTRR_PHYSBASE5 = 0000 0000 A000 0001H
IA32_MTRR_PHYSMASK5 = 0000 00FF FF80 0800H
Caches A0000000-A0800000 as WC type.

12.11.4 Range Size and Alignment Requirement

A range that is to be mapped to a variable-range MTRR must meet the following "power of 2" size and alignment rules:

1. The minimum range size is 4 KBytes and the base address of the range must be on at least a 4-KByte boundary.
2. For ranges greater than 4 KBytes, each range must be of length 2^n and its base address must be aligned on a 2^n boundary, where *n* is a value equal to or greater than 12. The base-address alignment value cannot be less than its length. For example, an 8-KByte range cannot be aligned on a 4-KByte boundary. It must be aligned on at least an 8-KByte boundary.

12.11.4.1 MTRR Precedences

If the MTRRs are not enabled (by setting the E flag in the IA32_MTRR_DEF_TYPE MSR), then all memory accesses are of the UC memory type. If the MTRRs are enabled, then the memory type used for a memory access is determined as follows:

1. If the physical address falls within the first 1 MByte of physical memory and fixed MTRRs are enabled, the processor uses the memory type stored for the appropriate fixed-range MTRR.
2. Otherwise, the processor attempts to match the physical address with a memory type set by the variable-range MTRRs:
   - If one variable memory range matches, the processor uses the memory type stored in the IA32_MTRR_PHYSBASE*n* register for that range.
   - If two or more variable memory ranges match and the memory types are identical, then that memory type is used.
   - If two or more variable memory ranges match and one of the memory types is UC, the UC memory type used.
   - If two or more variable memory ranges match and the memory types are WT and WB, the WT memory type is used.
   - For overlaps not defined by the above rules, processor behavior is undefined.
3. If no fixed or variable memory range matches, the processor uses the default memory type.

12.11.5 MTRR Initialization

On a hardware reset, the P6 and more recent processors clear the valid flags in variable-range MTRRs and clear the E flag in the IA32_MTRR_DEF_TYPE MSR to disable all MTRRs. All other bits in the MTRRs are undefined.

Prior to initializing the MTRRs, software (normally the system BIOS) must initialize all fixed-range and variable-range MTRR register fields to 0. Software can then initialize the MTRRs according to known types of memory, including memory on devices that it auto-configures. Initialization is expected to occur prior to booting the operating system.

See Section 12.11.8, "MTRR Considerations in MP Systems," for information on initializing MTRRs in MP (multiple-processor) systems.

12.11.6 Remapping Memory Types

A system designer may re-map memory types to tune performance or because a future processor may not implement all memory types supported by the Pentium 4, Intel Xeon, and P6 family processors. The following rules support coherent memory-type re-mappings:

1. A memory type should not be mapped into another memory type that has a weaker memory ordering model. For example, the uncacheable type cannot be mapped into any other type, and the write-back, write-through, and write-protected types cannot be mapped into the weakly ordered write-combining type.
2. A memory type that does not delay writes should not be mapped into a memory type that does delay writes, because applications of such a memory type may rely on its write-through behavior. Accordingly, the write-back type cannot be mapped into the write-through type.
3. A memory type that views write data as not necessarily stored and read back by a subsequent read, such as the write-protected type, can only be mapped to another type with the same behavior (and there are no others for the Pentium 4, Intel Xeon, and P6 family processors) or to the uncacheable type.

In many specific cases, a system designer can have additional information about how a memory type is used, allowing additional mappings. For example, write-through memory with no associated write side effects can be mapped into write-back memory.

12.11.7 MTRR Maintenance Programming Interface

The operating system maintains the MTRRs after booting and sets up or changes the memory types for memory-mapped devices. The operating system should provide a driver and application programming interface (API) to access and set the MTRRs. The function calls MemTypeGet() and MemTypeSet() define this interface.

12.11.7.1 MemTypeGet() Function

The MemTypeGet() function returns the memory type of the physical memory range specified by the parameters base and size. The base address is the starting physical address and the size is the number of bytes for the memory range. The function automatically aligns the base address and size to 4-KByte boundaries. Pseudocode for the MemTypeGet() function is given in Example 12-4.

Example 12-4. MemTypeGet() Pseudocode

```
#define MIXED_TYPES -1     /* 0 < MIXED_TYPES || MIXED_TYPES > 256 */

IF CPU_FEATURES.MTRR /* processor supports MTRRs */
    THEN
        Align BASE and SIZE to 4-KByte boundary;
        IF (BASE + SIZE) wrap physical-address space
            THEN return INVALID;
        FI;
        IF MTRRdefType.E = 0
            THEN return UC;
        FI;
        FirstType := Get4KMemType (BASE);
        /* Obtains memory type for first 4-KByte range. */
        /* See Get4KMemType (4KByteRange) in Example 12-5. */
        FOR each additional 4-KByte range specified in SIZE
            NextType := Get4KMemType (4KByteRange);
            IF NextType != FirstType
                THEN return Mixed_Types;
            FI;
        ROF;
        return FirstType;
    ELSE return UNSUPPORTED;
FI;
```

If the processor does not support MTRRs, the function returns UNSUPPORTED. If the MTRRs are not enabled, then the UC memory type is returned. If more than one memory type corresponds to the specified range, a status of MIXED_TYPES is returned. Otherwise, the memory type defined for the range (UC, WC, WT, WB, or WP) is returned.

The pseudocode for the Get4KMemType() function in Example 12-5 obtains the memory type for a single 4-KByte range at a given physical address. The sample code determines whether an PHY_ADDRESS falls within a fixed range by comparing the address with the known fixed ranges: 0 to 7FFFFH (64-KByte regions), 80000H to BFFFFH (16-KByte regions), and C0000H to FFFFFH (4-KByte regions). If an address falls within one of these ranges, the appropriate bits within one of its MTRRs determine the memory type.

Example 12-5. Get4KMemType() Pseudocode

```
IF IA32_MTRRCAP.FIX AND MTRRdefType.FE /* fixed registers enabled */
   THEN IF PHY_ADDRESS is within a fixed range
        return IA32_MTRR_FIX.Type;
FI;
FOR each variable-range MTRR in IA32_MTRRCAP.VCNT
    IF IA32_MTRR_PHYSMASK.V = 0
        THEN continue;
    FI;
    IF (PHY_ADDRESS AND IA32_MTRR_PHYSMASK.Mask) =
            (IA32_MTRR_PHYSBASE.Base
            AND IA32_MTRR_PHYSMASK.Mask)
        THEN
            return IA32_MTRR_PHYSBASE.Type;
    FI;
ROF;
return MTRRdefType.Type;
```

12.11.7.2 MemTypeSet() Function

The MemTypeSet() function in Example 12-6 sets a MTRR for the physical memory range specified by the parameters base and size to the type specified by type. The base address and size are multiples of 4 KBytes and the size is not 0.

Example 12-6. MemTypeSet Pseudocode

```
IF CPU_FEATURES.MTRR (* processor supports MTRRs *)
   THEN
      IF BASE and SIZE are not 4-KByte aligned or size is 0
         THEN return INVALID;
      FI;
      IF (BASE + SIZE) wrap 4-GByte address space
         THEN return INVALID;
      FI;
      IF TYPE is invalid for Pentium 4, Intel Xeon, and P6 family
      processors
         THEN return UNSUPPORTED;
      FI;
      IF TYPE is WC and not supported
         THEN return UNSUPPORTED;
      FI;
      IF IA32_MTRRCAP.FIX is set AND range can be mapped using a
      fixed-range MTRR
         THEN
            pre_mtrr_change();
            update affected MTRR;
            post_mtrr_change();
      FI;

   ELSE (* try to map using a variable MTRR pair *)
      IF IA32_MTRRCAP.VCNT = 0
         THEN return UNSUPPORTED;
      FI;
      IF conflicts with current variable ranges
         THEN return RANGE_OVERLAP;
      FI;
      IF no MTRRs available
         THEN return VAR_NOT_AVAILABLE;
      FI;
      IF BASE and SIZE do not meet the power of 2 requirements for
      variable MTRRs
         THEN return INVALID_VAR_REQUEST;
      FI;
      pre_mtrr_change();
      Update affected MTRRs;
      post_mtrr_change();
FI;

pre_mtrr_change()
   BEGIN
      disable interrupts;
      Save current value of CR4;
      disable and flush caches;
```

```
      flush TLBs;
      disable MTRRs;
      IF multiprocessing
         THEN maintain consistency through IPIs;
      FI;
   END
post_mtrr_change()
   BEGIN
      flush caches and TLBs;
      enable MTRRs;
      enable caches;
      restore value of CR4;
      enable interrupts;
   END
```

The physical address to variable range mapping algorithm in the MemTypeSet function detects conflicts with current variable range registers by cycling through them and determining whether the physical address in question matches any of the current ranges. During this scan, the algorithm can detect whether any current variable ranges overlap and can be concatenated into a single range.

The pre_mtrr_change() function disables interrupts prior to changing the MTRRs, to avoid executing code with a partially valid MTRR setup. The algorithm disables caching by setting the CD flag and clearing the NW flag in control register CR0. The caches are invalidated using the WBINVD instruction. The algorithm flushes all TLB entries either by clearing the page-global enable (PGE) flag in control register CR4 (if PGE was already set) or by updating control register CR3 (if PGE was already clear). Finally, it disables MTRRs by clearing the E flag in the IA32_MTRR_DEF_TYPE MSR.

After the memory type is updated, the post_mtrr_change() function re-enables the MTRRs and again invalidates the caches and TLBs. This second invalidation is required because of the processor's aggressive prefetch of both instructions and data. The algorithm restores interrupts and re-enables caching by setting the CD flag.

An operating system can batch multiple MTRR updates so that only a single pair of cache invalidations occur.

12.11.8 MTRR Considerations in MP Systems

In MP (multiple-processor) systems, the operating systems must maintain MTRR consistency between all the processors in the system. The Pentium 4, Intel Xeon, and P6 family processors provide no hardware support to maintain this consistency. In general, all processors must have the same MTRR values.

This requirement implies that when the operating system initializes an MP system, it must load the MTRRs of the boot processor while the E flag in register MTRRdefType is 0. The operating system then directs other processors to load their MTRRs with the same memory map. After all the processors have loaded their MTRRs, the operating system signals them to enable their MTRRs. Barrier synchronization is used to prevent further memory accesses until all processors indicate that the MTRRs are enabled. This synchronization is likely to be a shoot-down style algorithm, with shared variables and interprocessor interrupts.

Any change to the value of the MTRRs in an MP system requires the operating system to repeat the loading and enabling process to maintain consistency, using the following procedure:

1. Broadcast to all processors to execute the following code sequence.
2. Disable interrupts.
3. Wait for all processors to reach this point.
4. Enter the no-fill cache mode. (Set the CD flag in control register CR0 to 1 and the NW flag to 0.)
5. Flush all caches using the WBINVD instructions. Note on a processor that supports self-snooping, CPUID feature flag bit 27, this step is unnecessary.
6. If the PGE flag is set in control register CR4, flush all TLBs by clearing that flag.

7. If the PGE flag is clear in control register CR4, flush all TLBs by executing a MOV from control register CR3 to another register and then a MOV from that register back to CR3.
8. Disable all range registers (by clearing the E flag in register MTRRdefType). If only variable ranges are being modified, software may clear the valid bits for the affected register pairs instead.
9. Update the MTRRs.
10. Enable all range registers (by setting the E flag in register MTRRdefType). If only variable-range registers were modified and their individual valid bits were cleared, then set the valid bits for the affected ranges instead.
11. Flush all caches and all TLBs a second time. (The TLB flush is required for Pentium 4, Intel Xeon, and P6 family processors. Executing the WBINVD instruction is not needed when using Pentium 4, Intel Xeon, and P6 family processors, but it may be needed in future systems.)
12. Enter the normal cache mode to re-enable caching. (Set the CD and NW flags in control register CR0 to 0.)
13. Set PGE flag in control register CR4, if cleared in Step 6 (above).
14. Wait for all processors to reach this point.
15. Enable interrupts.

12.11.9 Large Page Size Considerations

The MTRRs provide memory typing for a limited number of regions that have a 4 KByte granularity (the same granularity as 4-KByte pages). The memory type for a given page is cached in the processor's TLBs. When using large pages (2 MBytes, 4 MBytes, or 1 GBytes), a single page-table entry covers multiple 4-KByte granules, each with a single memory type. Because the memory type for a large page is cached in the TLB, the processor can behave in an undefined manner if a large page is mapped to a region of memory that MTRRs have mapped with multiple memory types.

Undefined behavior can be avoided by ensuring that all MTRR memory-type ranges within a large page are of the same type. If a large page maps to a region of memory containing different MTRR-defined memory types, the PCD and PWT flags in the page-table entry should be set for the most conservative memory type for that range. For example, a large page used for memory mapped I/O and regular memory is mapped as UC memory. Alternatively, the operating system can map the region using multiple 4-KByte pages each with its own memory type.

The requirement that all 4-KByte ranges in a large page are of the same memory type implies that large pages with different memory types may suffer a performance penalty, since they must be marked with the lowest common denominator memory type. The same consideration apply to 1 GByte pages, each of which may consist of multiple 2-Mbyte ranges.

The Pentium 4, Intel Xeon, and P6 family processors provide special support for the physical memory range from 0 to 4 MBytes, which is potentially mapped by both the fixed and variable MTRRs. This support is invoked when a Pentium 4, Intel Xeon, or P6 family processor detects a large page overlapping the first 1 MByte of this memory range with a memory type that conflicts with the fixed MTRRs. Here, the processor maps the memory range as multiple 4-KByte pages within the TLB. This operation ensures correct behavior at the cost of performance. To avoid this performance penalty, operating-system software should reserve the large page option for regions of memory at addresses greater than or equal to 4 MBytes.

12.12 PAGE ATTRIBUTE TABLE (PAT)

The Page Attribute Table (PAT) extends the IA-32 architecture's page-table format to allow memory types to be assigned to regions of physical memory based on linear address mappings. The PAT is a companion feature to the MTRRs; that is, the MTRRs allow mapping of memory types to regions of the physical address space, where the PAT allows mapping of memory types to pages within the linear address space. The MTRRs are useful for statically describing memory types for physical ranges, and are typically set up by the system BIOS. The PAT extends the functions of the PCD and PWT bits in page tables to allow all five of the memory types that can be assigned with the MTRRs (plus one additional memory type) to also be assigned dynamically to pages of the linear address space.

The PAT was introduced to IA-32 architecture on the Pentium III processor. It is also available in the Pentium 4 and Intel Xeon processors.

12.12.1 Detecting Support for the PAT Feature

An operating system or executive can detect the availability of the PAT by executing the CPUID instruction with a value of 1 in the EAX register. Support for the PAT is indicated by the PAT flag (bit 16 of the values returned to EDX register). If the PAT is supported, the operating system or executive can use the IA32_PAT MSR to program the PAT. When memory types have been assigned to entries in the PAT, software can then use of the PAT-index bit (PAT) in the page-table and page-directory entries along with the PCD and PWT bits to assign memory types from the PAT to individual pages.

Note that there is no separate flag or control bit in any of the control registers that enables the PAT. The PAT is always enabled on all processors that support it, and the table lookup always occurs whenever paging is enabled, in all paging modes.

12.12.2 IA32_PAT MSR

The IA32_PAT MSR is located at MSR address 277H (see Chapter 2, "Model-Specific Registers (MSRs)" in the *Intel® 64 and IA-32 Architectures Software Developer's Manual, Volume 4*). Figure 12-9. shows the format of the 64-bit IA32_PAT MSR.

The IA32_PAT MSR contains eight page attribute fields: PA0 through PA7. The three low-order bits of each field are used to specify a memory type. The five high-order bits of each field are reserved, and must be set to all 0s. Each of the eight page attribute fields can contain any of the memory type encodings specified in Table 12-10.

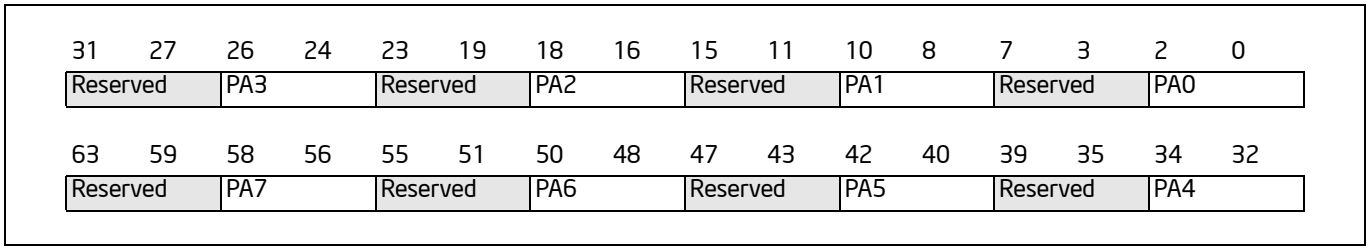

Figure 12-9. IA32_PAT MSR

Note that for the P6 family processors, the IA32_PAT MSR is named the PAT MSR.

Table 12-10. Memory Types That Can Be Encoded With PAT

Encoding	Mnemonic
00H	Uncacheable (UC)
01H	Write Combining (WC)
02H	Reserved*
03H	Reserved*
04H	Write Through (WT)
05H	Write Protected (WP)
06H	Write Back (WB)
07H	Uncached (UC-)
08H - FFH	Reserved*

NOTE:

* Using these encodings will result in a general-protection exception (#GP).

12.12.3 Selecting a Memory Type from the PAT

To select a memory type for a page from the PAT, a 3-bit index made up of the PAT, PCD, and PWT bits must be encoded in the page-table or page-directory entry for the page. Table 12-11 shows the possible encodings of the PAT, PCD, and PWT bits and the PAT entry selected with each encoding. The PAT bit is bit 7 in page-table entries that point to 4-KByte pages and bit 12 in paging-structure entries that point to larger pages. The PCD and PWT bits are bits 4 and 3, respectively, in paging-structure entries that point to pages of any size.

The PAT entry selected for a page is used in conjunction with the MTRR setting for the region of physical memory in which the page is mapped to determine the effective memory type for the page, as shown in Table 12-7.

Table 12-11. Selection of PAT Entries with PAT, PCD, and PWT Flags

PAT	PCD	PWT	PAT Entry
0	0	0	PAT0
0	0	1	PAT1
0	1	0	PAT2
0	1	1	PAT3
1	0	0	PAT4
1	0	1	PAT5
1	1	0	PAT6
1	1	1	PAT7

12.12.4 Programming the PAT

Table 12-12 shows the default setting for each PAT entry following a power up or reset of the processor. The setting remain unchanged following a soft reset (INIT reset).

Table 12-12. Memory Type Setting of PAT Entries Following a Power-up or Reset

PAT Entry	Memory Type Following Power-up or Reset
PAT0	WB
PAT1	WT
PAT2	UC-
PAT3	UC
PAT4	WB
PAT5	WT
PAT6	UC-
PAT7	UC

The values in all the entries of the PAT can be changed by writing to the IA32_PAT MSR using the WRMSR instruction. The IA32_PAT MSR is read and write accessible (use of the RDMSR and WRMSR instructions, respectively) to software operating at a CPL of 0. Table 12-10 shows the allowable encoding of the entries in the PAT. Attempting to write an undefined memory type encoding into the PAT causes a general-protection (#GP) exception to be generated.

The operating system is responsible for ensuring that changes to a PAT entry occur in a manner that maintains the consistency of the processor caches and translation lookaside buffers (TLB). This is accomplished by following the procedure as specified in Section 12.11.8, "MTRR Considerations in MP Systems," for changing the value of an MTRR in a multiple processor system. It requires a specific sequence of operations that includes flushing the processors caches and TLBs.

The PAT allows any memory type to be specified in the page tables, and therefore it is possible to have a single physical page mapped to two or more different linear addresses, each with different memory types. Intel does not support this practice because it may lead to undefined operations that can result in a system failure. In particular, a WC page must never be aliased to a cacheable page because WC writes may not check the processor caches.

When remapping a page that was previously mapped as a cacheable memory type to a WC page, an operating system can avoid this type of aliasing by doing the following:

1. Remove the previous mapping to a cacheable memory type in the page tables; that is, make them not present.
2. Flush the TLBs of processors that may have used the mapping, even speculatively.
3. Create a new mapping to the same physical address with a new memory type, for instance, WC.
4. Flush the caches on all processors that may have used the mapping previously. Note on processors that support self-snooping, CPUID feature flag bit 27, this step is unnecessary.

Operating systems that use a page directory as a page table (to map large pages) and enable page size extensions must carefully scrutinize the use of the PAT index bit for the 4-KByte page-table entries. The PAT index bit for a page-table entry (bit 7) corresponds to the page size bit in a page-directory entry. Therefore, the operating system can only use PAT entries PA0 through PA3 when setting the caching type for a page table that is also used as a page directory. If the operating system attempts to use PAT entries PA4 through PA7 when using this memory as a page table, it effectively sets the PS bit for the access to this memory as a page directory.

For compatibility with earlier IA-32 processors that do not support the PAT, care should be taken in selecting the encodings for entries in the PAT (see Section 12.12.5, “PAT Compatibility with Earlier IA-32 Processors”).

12.12.5 PAT Compatibility with Earlier IA-32 Processors

For IA-32 processors that support the PAT, the IA32_PAT MSR is always active. That is, the PCD and PWT bits in page-table entries and in page-directory entries (that point to pages) are always select a memory type for a page indirectly by selecting an entry in the PAT. They never select the memory type for a page directly as they do in earlier IA-32 processors that do not implement the PAT (see Table 12-6).

To allow compatibility for code written to run on earlier IA-32 processor that do not support the PAT, the PAT mechanism has been designed to allow backward compatibility to earlier processors. This compatibility is provided through the ordering of the PAT, PCD, and PWT bits in the 3-bit PAT entry index. For processors that do not implement the PAT, the PAT index bit (bit 7 in the page-table entries and bit 12 in the page-directory entries) is reserved and set to 0. With the PAT bit reserved, only the first four entries of the PAT can be selected with the PCD and PWT bits. At power-up or reset (see Table 12-12), these first four entries are encoded to select the same memory types as the PCD and PWT bits would normally select directly in an IA-32 processor that does not implement the PAT. So, if encodings of the first four entries in the PAT are left unchanged following a power-up or reset, code written to run on earlier IA-32 processors that do not implement the PAT will run correctly on IA-32 processors that do implement the PAT.

CHAPTER 13
INTEL® MMX™ TECHNOLOGY SYSTEM PROGRAMMING

This chapter describes those features of the Intel® MMX™ technology that must be considered when designing or enhancing an operating system to support MMX technology. It covers MMX instruction set emulation, the MMX state, aliasing of MMX registers, saving MMX state, task and context switching considerations, exception handling, and debugging.

13.1 EMULATION OF THE MMX INSTRUCTION SET

The IA-32 or Intel 64 architecture does not support emulation of the MMX instructions, as it does for x87 FPU instructions. The EM flag in control register CR0 (provided to invoke emulation of x87 FPU instructions) cannot be used for MMX instruction emulation. If an MMX instruction is executed when the EM flag is set, an invalid opcode exception (UD#) is generated. Table 13-1 shows the interaction of the EM, MP, and TS flags in control register CR0 when executing MMX instructions.

Table 13-1. Action Taken By MMX Instructions for Different Combinations of EM, MP, and TS

CR0 Flags			Action
EM	MP*	TS	
0	1	0	Execute.
0	1	1	#NM exception.
1	1	0	#UD exception.
1	1	1	#UD exception.

NOTE:

* For processors that support the MMX instructions, the MP flag should be set.

13.2 THE MMX STATE AND MMX REGISTER ALIASING

The MMX state consists of eight 64-bit registers (MM0 through MM7). These registers are aliased to the low 64-bits (bits 0 through 63) of floating-point registers R0 through R7 (see Figure 13-1). Note that the MMX registers are mapped to the physical locations of the floating-point registers (R0 through R7), not to the relative locations of the registers in the floating-point register stack (ST0 through ST7). As a result, the MMX register mapping is fixed and is not affected by value in the Top Of Stack (TOS) field in the floating-point status word (bits 11 through 13).

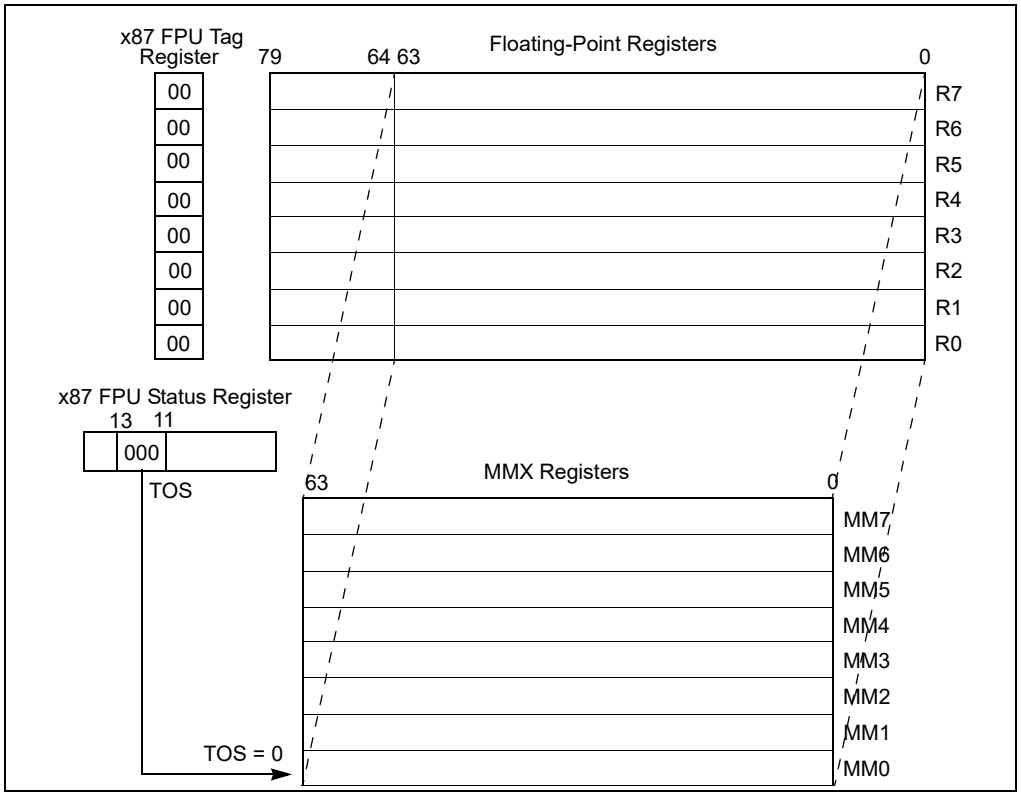

Figure 13-1. Mapping of MMX Registers to Floating-Point Registers

When a value is written into an MMX register using an MMX instruction, the value also appears in the corresponding floating-point register in bits 0 through 63. Likewise, when a floating-point value written into a floating-point register by a x87 FPU, the low 64 bits of that value also appears in a the corresponding MMX register.

The execution of MMX instructions have several side effects on the x87 FPU state contained in the floating-point registers, the x87 FPU tag word, and the x87 FPU status word. These side effects are as follows:

- When an MMX instruction writes a value into an MMX register, at the same time, bits 64 through 79 of the corresponding floating-point register are set to all 1s.
- When an MMX instruction (other than the EMMS instruction) is executed, each of the tag fields in the x87 FPU tag word is set to 00B (valid). (See also Section 13.2.1, "Effect of MMX, x87 FPU, FXSAVE, and FXRSTOR Instructions on the x87 FPU Tag Word.")
- When the EMMS instruction is executed, each tag field in the x87 FPU tag word is set to 11B (empty).
- Each time an MMX instruction is executed, the TOS value is set to 000B.

Execution of MMX instructions does not affect the other bits in the x87 FPU status word (bits 0 through 10 and bits 14 and 15) or the contents of the other x87 FPU registers that comprise the x87 FPU state (the x87 FPU control word, instruction pointer, data pointer, or opcode registers).

Table 13-2 summarizes the effects of the MMX instructions on the x87 FPU state.

Table 13-2. Effects of MMX Instructions on x87 FPU State

MMX Instruction Type	x87 FPU Tag Word	TOS Field of x87 FPU Status Word	Other x87 FPU Registers	Bits 64 Through 79 of x87 FPU Data Registers	Bits 0 Through 63 of x87 FPU Data Registers
Read from MMX register	All tags set to 00B (Valid)	000B	Unchanged	Unchanged	Unchanged
Write to MMX register	All tags set to 00B (Valid)	000B	Unchanged	Set to all 1s	Overwritten with MMX data
EMMS	All fields set to 11B (Empty)	000B	Unchanged	Unchanged	Unchanged

13.2.1 Effect of MMX, x87 FPU, FXSAVE, and FXRSTOR Instructions on the x87 FPU Tag Word

Table 13-3 summarizes the effect of MMX and x87 FPU instructions and the FXSAVE and FXRSTOR instructions on the tags in the x87 FPU tag word and the corresponding tags in an image of the tag word stored in memory.

The values in the fields of the x87 FPU tag word do not affect the contents of the MMX registers or the execution of MMX instructions. However, the MMX instructions do modify the contents of the x87 FPU tag word, as is described in Section 13.2, "The MMX State and MMX Register Aliasing." These modifications may affect the operation of the x87 FPU when executing x87 FPU instructions, if the x87 FPU state is not initialized or restored prior to beginning x87 FPU instruction execution.

Note that the FSAVE, FXSAVE, and FSTENV instructions (which save x87 FPU state information) read the x87 FPU tag register and contents of each of the floating-point registers, determine the actual tag values for each register (empty, nonzero, zero, or special), and store the updated tag word in memory. After executing these instructions, all the tags in the x87 FPU tag word are set to empty (11B). Likewise, the EMMS instruction clears MMX state from the MMX/floating-point registers by setting all the tags in the x87 FPU tag word to 11B.

Table 13-3. Effect of the MMX, x87 FPU, and FXSAVE/FXRSTOR Instructions on the x87 FPU Tag Word

Instruction Type	Instruction	x87 FPU Tag Word	Image of x87 FPU Tag Word Stored in Memory
MMX	All (except EMMS)	All tags are set to 00B (valid).	Not affected.
MMX	EMMS	All tags are set to 11B (empty).	Not affected.
x87 FPU	All (except FSAVE, FSTENV, FRSTOR, FLDENV)	Tag for modified floating-point register is set to 00B or 11B.	Not affected.
x87 FPU and FXSAVE	FSAVE, FSTENV, FXSAVE	Tags and register values are read and interpreted; then all tags are set to 11B.	Tags are set according to the actual values in the floating-point registers; that is, empty registers are marked 11B and valid registers are marked 00B (nonzero), 01B (zero), or 10B (special).
x87 FPU and FXRSTOR	FRSTOR, FLDENV, FXRSTOR	All tags marked 11B in memory are set to 11B; all other tags are set according to the value in the corresponding floating-point register: 00B (nonzero), 01B (zero), or 10B (special).	Tags are read and interpreted, but not modified.

13.3 SAVING AND RESTORING THE MMX STATE AND REGISTERS

Because the MMX registers are aliased to the x87 FPU data registers, the MMX state can be saved to memory and restored from memory as follows:

- Execute an FSAVE, FNSAVE, or FXSAVE instruction to save the MMX state to memory. (The FXSAVE instruction also saves the state of the XMM and MXCSR registers.)
- Execute an FRSTOR or FXRSTOR instruction to restore the MMX state from memory. (The FXRSTOR instruction also restores the state of the XMM and MXCSR registers.)

The save and restore methods described above are required for operating systems (see Section 13.4, "Saving MMX State on Task or Context Switches"). Applications can in some cases save and restore only the MMX registers in the following way:

- Execute eight MOVQ instructions to save the contents of the MMX0 through MMX7 registers to memory. An EMMS instruction may then (optionally) be executed to clear the MMX state in the x87 FPU.
- Execute eight MOVQ instructions to read the saved contents of MMX registers from memory into the MMX0 through MMX7 registers.

NOTE

The IA-32 architecture does not support scanning the x87 FPU tag word and then only saving valid entries.

13.4 SAVING MMX STATE ON TASK OR CONTEXT SWITCHES

When switching from one task or context to another, it is often necessary to save the MMX state. As a general rule, if the existing task switching code for an operating system includes facilities for saving the state of the x87 FPU, these facilities can also be relied upon to save the MMX state, without rewriting the task switch code. This reliance is possible because the MMX state is aliased to the x87 FPU state (see Section 13.2, "The MMX State and MMX Register Aliasing").

With the introduction of the FXSAVE and FXRSTOR instructions and of SSE/SSE2/SSE3/SSSE3 extensions, it is possible (and more efficient) to create state saving facilities in the operating system or executive that save the x87 FPU/MMX/SSE/SSE2/SSE3/SSSE3 state in one operation. Section 14.4, "Designing OS Facilities for Saving x87 FPU, SSE, AND EXTENDED States on Task or Context Switches," describes how to design such facilities. The techniques describes in this section can be adapted to saving only the MMX and x87 FPU state if needed.

13.5 EXCEPTIONS THAT CAN OCCUR WHEN EXECUTING MMX INSTRUCTIONS

MMX instructions do not generate x87 FPU floating-point exceptions, nor do they affect the processor's status flags in the EFLAGS register or the x87 FPU status word. The following exceptions can be generated during the execution of an MMX instruction:

- Exceptions during memory accesses:
  - — Stack-segment fault (#SS).
  - — General protection (#GP).
  - — Page fault (#PF).
  - — Alignment check (#AC), if alignment checking is enabled.
- System exceptions:
  - — Invalid Opcode (#UD), if the EM flag in control register CR0 is set when an MMX instruction is executed (see Section 13.1, "Emulation of the MMX Instruction Set").
  - — Device not available (#NM), if an MMX instruction is executed when the TS flag in control register CR0 is set. (See Section 14.4.1, "Using the TS Flag to Control the Saving of the x87 FPU and SSE State.")
- Floating-point error (#MF). (See Section 13.5.1, "Effect of MMX Instructions on Pending x87 Floating-Point Exceptions.")
- Other exceptions can occur indirectly due to the faulty execution of the exception handlers for the above exceptions.

13.5.1 Effect of MMX Instructions on Pending x87 Floating-Point Exceptions

If an x87 FPU floating-point exception is pending and the processor encounters an MMX instruction, the processor generates a x87 FPU floating-point error (#MF) prior to executing the MMX instruction, to allow the pending exception to be handled by the x87 FPU floating-point error exception handler. While this exception handler is executing, the x87 FPU state is maintained and is visible to the handler. Upon returning from the exception handler, the MMX instruction is executed, which will alter the x87 FPU state, as described in Section 13.2, "The MMX State and MMX Register Aliasing."

13.6 DEBUGGING MMX CODE

The debug facilities operate in the same manner when executing MMX instructions as when executing other IA-32 or Intel 64 architecture instructions.

To correctly interpret the contents of the MMX or x87 FPU registers from the FSAVE/FNSAVE or FXSAVE image in memory, a debugger needs to take account of the relationship between the x87 FPU register's logical locations relative to TOS and the MMX register's physical locations.

In the x87 FPU context, ST*n* refers to an x87 FPU register at location *n* relative to the TOS. However, the tags in the x87 FPU tag word are associated with the physical locations of the x87 FPU registers (R0 through R7). The MMX registers always refer to the physical locations of the registers (with MM0 through MM7 being mapped to R0 through R7). Figure 13-2 shows this relationship. Here, the inner circle refers to the physical location of the x87 FPU and MMX registers. The outer circle refers to the x87 FPU registers's relative location to the current TOS.

When the TOS equals 0 (case A in Figure 13-2), ST0 points to the physical location R0 on the floating-point stack. MM0 maps to ST0, MM1 maps to ST1, and so on.

When the TOS equals 2 (case B in Figure 13-2), ST0 points to the physical location R2. MM0 maps to ST6, MM1 maps to ST7, MM2 maps to ST0, and so on.

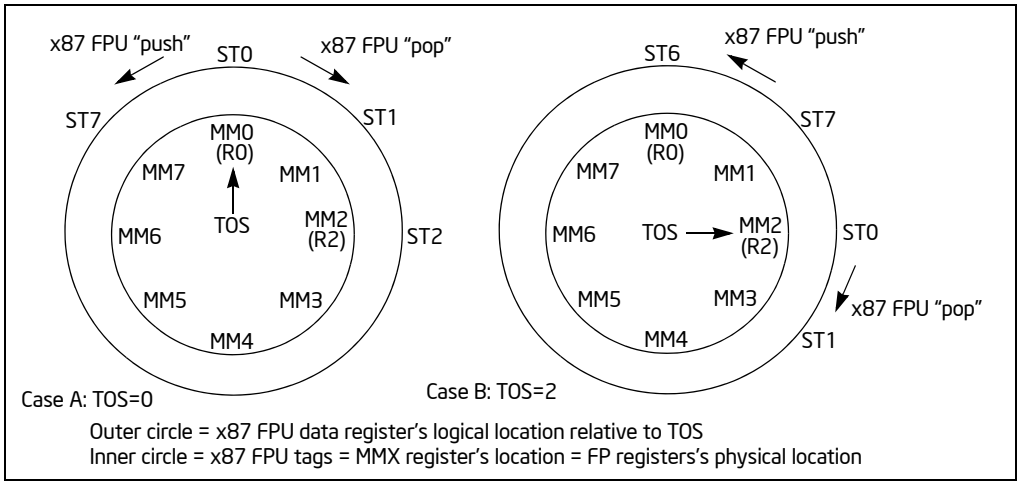

Figure 13-2. Mapping of MMX Registers to x87 FPU Data Register Stack

CHAPTER 14
SYSTEM PROGRAMMING FOR INSTRUCTION SET EXTENSIONS AND PROCESSOR EXTENDED STATES

This chapter describes system programming features for instruction set extensions operating on the processor state extension known as the SSE state (XMM registers, MXCSR) and for other processor extended states. Instruction set extensions operating on the SSE state include the streaming SIMD extensions (SSE), streaming SIMD extensions 2 (SSE2), streaming SIMD extensions 3 (SSE3), Supplemental SSE3 (SSSE3), and SSE4. Collectively, these are called **SSE extensions**[1] and the corresponding instructions **SSE instructions**. FXSAVE/FXRSTOR instructions can be used save/restore SSE state along with FP state. See Section 10.5 in the *Intel® 64 and IA-32 Architectures Software Developer's Manual, Volume 1* for information about FXSAVE and FXRSTOR.

Sections 14.1 through 14.4 cover system programming requirements to enable the SSE extensions, providing operating system or executive support for the SSE extensions, SIMD floating-point exceptions, exception handling, and task (context) switching. These sections primarily discuss use of FXSAVE/FXRSTOR to save/restore SSE state.

XSAVE feature set refers to extensions to the Intel architecture that will allow system executives to implement support for multiple processor extended states along with FP/SSE states that may be introduced over time without requiring the system executive to be modified each time a new processor state extension is introduced. XSAVE feature set provide mechanisms to enumerate the supported extended states, enable some or all of them for software use, instructions to save/restore the states and enumerate the layout of the states when saved to memory. XSAVE/XRSTOR instructions are part of the XSAVE feature set. These instructions are introduced after the introduction of FP/SSE states but can be used to manage legacy FP/SSE state along with processor extended states. See CHAPTER 13 in the *Intel® 64 and IA-32 Architectures Software Developer's Manual, Volume 1* for information about XSAVE feature set.

System programming for managing processor extended states is described in sections 14.5 through 14.6. XSAVE feature set is designed to be compatible with FXSAVE/FXRSTOR and hence much of the material through sections 14.1 to 14.4 related to SSE state also applies to XSAVE feature set with the exception of enumeration and saving/restoring state.

XSAVE Compaction is an XSAVE feature that allows operating systems to allocate space for only the states saved to conserve memory usage. A new instruction called XSAVEC is introduced to save extended states in compacted format and XRSTOR instruction is enhanced to comprehend compacted format. System programming for managing processor extended states in compacted format is also described in section 14.5.

Supervisor state is an extended state that can only be accessed in ring 0. XSAVE feature set has been enhanced to manage supervisor states. Two new ring 0 instructions, XSAVES/XRSTORS, are introduced to save/restore supervisor states along with other XSAVE managed states. They are privileged instruction and only operate in compacted format. System programming for managing supervisor states in described in section 14.7.

Each XSAVE managed features may have additional feature specific system programming requirements such as exception handlers etc. Feature specific system programming requirements for XSAVE managed features are described in section 14.8.

14.1 PROVIDING OPERATING SYSTEM SUPPORT FOR SSE EXTENSIONS

To use SSE extensions, the operating system or executive must provide support for initializing the processor to use these extensions, for handling SIMD floating-point exceptions, and for using FXSAVE and FXRSTOR (Section 10.5 of the *Intel® 64 and IA-32 Architectures Software Developer's Manual, Volume 1*) to manage context. XSAVE feature set can also be used to manage SSE state along with other processor extended states as described in 14.5. This section primarily focuses on using FXSAVE/FXRSTOR to manage SSE state. Because SSE extensions share the same state, experience the same sets of non-numerical and numerical exception behavior, these guidelines that apply to SSE also apply to other sets of SIMD extensions that operate on the same processor state and subject to the same sets of non-numerical and numerical exception behavior.

1. The collection also includes PCLMULQDQ and AES instructions operating on XMM state.

Chapter 11, "Programming with Streaming SIMD Extensions 2 (SSE2)" and Chapter 12, "Programming with Intel® SSE3, SSSE3,Intel® SSE4 AND Intel® AESNI," in the *Intel® 64 and IA-32 Architectures Software Developer's Manual, Volume 1*, provide details on SSE instruction set.

14.1.1 Adding Support to an Operating System for SSE Extensions

The following guidelines describe functions that an operating system or executive must perform to support SSE extensions:

1. Check that the processor supports the SSE extensions.
2. Check that the processor supports the FXSAVE and FXRSTOR instructions or the XSAVE feature set.
3. Provide an initialization for the SSE states.
4. Provide support for the FXSAVE and FXRSTOR instructions or the XSAVE feature set.
5. Provide support (if necessary) in non-numeric exception handlers for exceptions generated by the SSE instructions.
6. Provide an exception handler for the SIMD floating-point exception (#XM).

The following sections describe how to implement each of these guidelines.

14.1.2 Checking for CPU Support

If the processor attempts to execute an unsupported SSE instruction, the processor generates an invalid-opcode exception (#UD). Before an operating system or executive attempts to use SSE extensions, it should check that support is present by confirming the following bit values returned by the CPUID instruction:

- CPUID.1:EDX.SSE[bit 25] = 1
- CPUID.1:EDX.SSE2[bit 26] = 1
- CPUID.1:ECX.SSE3[bit 0] = 1
- CPUID.1:ECX.SSSE3[bit 9] = 1
- CPUID.1:ECX.SSE4_1[bit 19] = 1
- CPUID.1:ECX.SSE4_2[bit 20] = 1

(To use POPCNT instruction, software must check CPUID.1:ECX.POPCNT[bit 23] = 1.)

Separate checks must be made to ensure that the processor supports either FXSAVE and FXRSTOR or the XSAVE feature set. See Section 10.5 of the *Intel® 64 and IA-32 Architectures Software Developer's Manual, Volume 1* and Chapter 13 of the *Intel® 64 and IA-32 Architectures Software Developer's Manual, Volume 1*, respectively.

14.1.3 Initialization of the SSE Extensions

The operating system or executive should carry out the following steps to set up SSE extensions for use by application programs:

1. Set CR4.OSFXSR[bit 9] = 1. Setting this flag implies that the operating system provides facilities for saving and restoring SSE state using FXSAVE and FXRSTOR instructions. These instructions may be used to save the SSE state during task switches and when invoking the SIMD floating-point exception (#XM) handler (see Section 14.1.5, "Providing a Handler for the SIMD Floating-Point Exception (#XM)").

   If the processor does not support the FXSAVE and FXRSTOR instructions, attempting to set the OSFXSR flag causes a general-protection exception (#GP) to be generated.

2. Set CR4.OSXMMEXCPT[bit 10] = 1. Setting this flag implies that the operating system provides a SIMD floating-point exception (#XM) handler (see Section 14.1.5, "Providing a Handler for the SIMD Floating-Point Exception (#XM)").

NOTE

The OSFXSR and OSXMMEXCPT bits in control register CR4 must be set by the operating system. The processor has no other way of detecting operating-system support for the FXSAVE and FXRSTOR instructions or for handling SIMD floating-point exceptions.

3. Clear CR0.EM[bit 2] = 0. This action disables emulation of the x87 FPU, which is required when executing SSE instructions (see Section 2.5, "Control Registers").
4. Set CR0.MP[bit 1] = 1. This setting is required for Intel 64 and IA-32 processors that support the SSE extensions (see Section 10.2.1, "Configuring the x87 FPU Environment").

Table 14-1 and Table 14-2 show the actions of the processor when an SSE instruction is executed, depending on the following:

- OSFXSR and OSXMMEXCPT flags in control register CR4
- SSE/SSE2/SSE3/SSSE3/SSE4 feature flags returned by CPUID
- EM, MP, and TS flags in control register CR0

Table 14-1. Action Taken for Combinations of OSFXSR, OSXMMEXCPT, SSE, SSE2, SSE3, EM, MP, and TS[1]

CR4		CPUID	CR0 Flags			Action
OSFXSR	OSXMMEXCPT	SSE, SSE2, SSE3[2], SSE4_1[3]	EM	MP[4]	TS	
0	X[5]	X	X	1	X	#UD exception.
1	X	0	X	1	X	#UD exception.
1	X	1	1	1	X	#UD exception.
1	0	1	0	1	0	Execute instruction; #UD exception if unmasked SIMD floating-point exception is detected.
1	1	1	0	1	0	Execute instruction; #XM exception if unmasked SIMD floating-point exception is detected.
1	X	1	0	1	1	#NM exception.

NOTES:

1. For execution of any SSE instruction except the PAUSE, PREFETCH*h*, SFENCE, LFENCE, MFENCE, MOVNTI, and CLFLUSH instructions.
2. Exception conditions due to CR4.OSFXSR or CR4.OSXMMEXCPT do not apply to FISTTP.
3. Only applies to DPPS, DPPD, ROUNDPS, ROUNDPD, ROUNDSS, ROUNDSD.
4. For processors that support the MMX instructions, the MP flag should be set.
5. X = Don't care.

Table 14-2. Action Taken for Combinations of OSFXSR, SSSE3, SSE4, EM, and TS

CR4	CPUID	CR0 Flags		Action
OSFXSR	SSSE3 SSE4_1[1] SSE4_2[2]	EM	TS	
0	X[3]	X	X	#UD exception.
1	0	X	X	#UD exception.
1	1	1	X	#UD exception.
1	1	0	1	#NM exception.

NOTES:

1. Applies to SSE4_1 instructions except DPPS, DPPD, ROUNDPS, ROUNDPD, ROUNDSS, ROUNDSD.
2. Applies to SSE4_2 instructions except CRC32 and POPCNT.
3. X = Don't care.

The SIMD floating-point exception mask bits (bits 7 through 12), the flush-to-zero flag (bit 15), the denormals-are-zero flag (bit 6), and the rounding control field (bits 13 and 14) in the MXCSR register should be left in their default values of 0. This permits the application to determine how these features are to be used.

14.1.4 Providing Non-Numeric Exception Handlers for Exceptions Generated by the SSE Instructions

SSE instructions can generate the same type of memory-access exceptions (such as page faults and limit violations) and other non-numeric exceptions as other Intel 64 and IA-32 architecture instructions generate.

Ordinarily, existing exception handlers can handle these and other non-numeric exceptions without code modification. However, depending on the mechanisms used in existing exception handlers, some modifications might need to be made.

The SSE extensions can generate the non-numeric exceptions listed below:

- Memory Access Exceptions:
  - — Stack-segment fault (#SS).
  - — General protection exception (#GP). Executing most SSE instructions with an unaligned 128-bit memory reference generates a general-protection exception. (The MOVUPS and MOVUPD instructions allow unaligned a loads or stores of 128-bit memory locations, without generating a general-protection exception.) A 128-bit reference within the stack segment that is not aligned to a 16-byte boundary will also generate a general-protection exception, instead a stack-segment fault exception (#SS).
  - — Page fault (#PF).
  - — Alignment check (#AC). When enabled, this type of alignment check operates on operands that are less than 128-bits in size: 16-bit, 32-bit, and 64-bit. To enable the generation of alignment check exceptions, do the following:
    - Set the AM flag (bit 18 of control register CR0)
    - Set the AC flag (bit 18 of the EFLAGS register)
    - CPL must be 3

    If alignment check exceptions are enabled, 16-bit, 32-bit, and 64-bit misalignment will be detected for the MOVUPD and MOVUPS instructions; detection of 128-bit misalignment is not guaranteed and may vary with implementation.

- System Exceptions:
  - Invalid-opcode exception (#UD). This exception is generated when executing SSE instructions under the following conditions:
    - SSE/SSE2/SSE3/SSSE3/SSE4_1/SSE4_2 feature flags returned by CPUID are set to 0. This condition does not affect the CLFLUSH instruction, nor POPCNT.
    - The CLFSH feature flag returned by the CPUID instruction is set to 0. This exception condition only pertains to the execution of the CLFLUSH instruction.
    - The POPCNT feature flag returned by the CPUID instruction is set to 0. This exception condition only pertains to the execution of the POPCNT instruction.
    - The EM flag (bit 2) in control register CR0 is set to 1, regardless of the value of TS flag (bit 3) of CR0. This condition does not affect the PAUSE, PREFETCH*h*, MOVNTI, SFENCE, LFENCE, MFENCE, CLFLUSH, CRC32, and POPCNT instructions.
    - The OSFXSR flag (bit 9) in control register CR4 is set to 0. This condition does not affect the PSHUFW, MOVNTQ, MOVNTI, PAUSE, PREFETCH*h*, SFENCE, LFENCE, MFENCE, CLFLUSH, CRC32, and POPCNT instructions.
    - Executing an instruction that causes a SIMD floating-point exception when the OSXMMEXCPT flag (bit 10) in control register CR4 is set to 0. See Section 14.4.1, "Using the TS Flag to Control the Saving of the x87 FPU and SSE State."
  - Device not available (#NM). This exception is generated by executing a SSE instruction when the TS flag (bit 3) of CR0 is set to 1.

Other exceptions can occur during delivery of the above exceptions.

14.1.5 Providing a Handler for the SIMD Floating-Point Exception (#XM)

SSE instructions do not generate numeric exceptions on packed integer operations. They can generate the following numeric (SIMD floating-point) exceptions on packed and scalar single precision and double precision floating-point operations.

- Invalid operation (#I)
- Divide-by-zero (#Z)
- Denormal operand (#D)
- Numeric overflow (#O)
- Numeric underflow (#U)
- Inexact result (Precision) (#P)

These SIMD floating-point exceptions (with the exception of the denormal operand exception) are defined in the IEEE Standard 754 for Floating-Point Arithmetic and represent the same conditions that cause x87 FPU floating-point error exceptions (#MF) to be generated for x87 FPU instructions.

Each of these exceptions can be masked, in which case the processor returns a reasonable result to the destination operand without invoking an exception handler. However, if any of these exceptions are left unmasked, detection of the exception condition results in a SIMD floating-point exception (#XM) being generated. See Chapter 6, "Interrupt 19—SIMD Floating-Point Exception (#XM)."

To handle unmasked SIMD floating-point exceptions, the operating system or executive must provide an exception handler. The section titled "SSE and SSE2 SIMD Floating-Point Exceptions" in Chapter 11, "Programming with Streaming SIMD Extensions 2 (SSE2)," of the *Intel® 64 and IA-32 Architectures Software Developer's Manual, Volume 1*, describes the SIMD floating-point exception classes and gives suggestions for writing an exception handler to handle them.

To indicate that the operating system provides a handler for SIMD floating-point exceptions (#XM), the OSXMMEXCPT flag (bit 10) must be set in control register CR4.

14.1.5.1 Numeric Error flag and IGNNE#

SSE extensions ignore the NE flag in control register CR0 (that is, they treat it as if it were always set) and the IGNNE# pin. When an unmasked SIMD floating-point exception is detected, it is always reported by generating a SIMD floating-point exception (#XM).

14.2 EMULATION OF SSE EXTENSIONS

The Intel 64 and IA-32 architectures do not support emulation of the SSE instructions, as they do for x87 FPU instructions.

The EM flag in control register CR0 (provided to invoke emulation of x87 FPU instructions) cannot be used to invoke emulation of SSE instructions. If an SSE instruction is executed when CR0.EM = 1, an invalid opcode exception (#UD) is generated. See Table 14-1.

14.3 SAVING AND RESTORING SSE STATE

The SSE state consists of the state of the XMM and MXCSR registers. Intel recommends the following method for saving and restoring this state:

- Execute the FXSAVE instruction to save the state of the XMM and MXCSR registers to memory.
- Execute the FXRSTOR instruction to restore the state of the XMM and MXCSR registers from the image saved in memory earlier.

This save and restore method is required for all operating systems. XSAVE feature set can also be used to save/restore SSE state. See Section 14.5, "The XSAVE Feature Set and Processor Extended State Management," for using the XSAVE feature set to save/restore SSE state.

In some cases, applications may choose to save only the XMM and MXCSR registers in the following manner:

- Execute MOVDQ instructions to save the contents of the XMM registers to memory.
- Execute a STMXCSR instruction to save the state of the MXCSR register to memory.

Such applications must restore the XMM and MXCSR registers as follows:

- Execute MOVDQ instructions to load the saved contents of the XMM registers from memory into the XMM registers.
- Execute a LDMXCSR instruction to restore the state of the MXCSR register from memory.

14.4 DESIGNING OS FACILITIES FOR SAVING X87 FPU, SSE, AND EXTENDED STATES ON TASK OR CONTEXT SWITCHES

The x87 FPU and SSE state consist of the state of the x87 FPU, XMM, and MXCSR registers. The FXSAVE and FXRSTOR instructions provide a fast method for saving and restoring this state. The XSAVE feature set can also be used to save FP and SSE state along with other extended states (see Section 14.5).

Older operating systems may use FSAVE/FNSAVE and FRSTOR to save the x87 FPU state. These facilities can be extended to save and restore SSE state by substituting FXSAVE and FXRSTOR or the XSAVE feature set in place of FSAVE/FNSAVE and FRSTOR.

If task or context switching facilities are written from scratch, any of several approaches may be taken for using the FXSAVE and FXRSTOR instructions or the XSAVE feature set to save and restore x87 FPU and SSE state:

- The operating system can require applications that are intended to be run as tasks take responsibility for saving the states prior to a task suspension during a task switch and for restoring the states when the task is resumed. This approach is appropriate for cooperative multitasking operating systems, where the application has control over (or is able to determine) when a task switch is about to occur and can save state prior to the task switch.

- The operating system can take the responsibility for saving the states as part of the task switch process and restoring the state of the registers when a suspended task is resumed. This approach is appropriate for preemptive multitasking operating systems, where the application cannot know when it is going to be preempted and cannot prepare in advance for task switching.
- The operating system can take the responsibility for saving the states as part of the task switch process, but delay the restoring of the states until an instruction operating on the states is actually executed by the new task. See Section 14.4.1, "Using the TS Flag to Control the Saving of the x87 FPU and SSE State," for more information. This approach is called lazy restore.

  The use of lazy restore mechanism in context switches is not recommended when XSAVE feature set is used to save/restore states for the following reasons.

  — With XSAVE feature set, Intel processors have optimizations in place to avoid saving the state components that are in their initial configurations or when they have not been modified since they were restored last. These optimizations eliminate the need for lazy restore. See section 13.5.4 in *Intel® 64 and IA-32 Architectures Software Developer's Manual, Volume 1*.

  — Intel processors have power optimizations when state components are in their initial configurations. Use of lazy restore retains the non-initial configuration of the last thread and is not power efficient.

  — Not all extended states support lazy restore mechanisms. As such, when one or more such states are enabled it becomes very inefficient to use lazy restore as it results in two separate state restore, one in context switch for the states that does not support lazy restore and one in the #NM handler for states that support lazy restore.

14.4.1 Using the TS Flag to Control the Saving of the x87 FPU and SSE State

The TS flag in control register CR0 is provided to allow the operating system to delay saving/restoring the x87 FPU and SSE state until an instruction that actually accesses this state is encountered in a new task. When the TS flag is set, the processor monitors the instruction stream for x87 FPU, MMX, SSE instructions. When the processor detects one of these instructions, it raises a device-not-available exception (#NM) prior to executing the instruction. The #NM exception handler can then be used to save the x87 FPU and SSE state for the previous task (using an FXSAVE, XSAVE, or XSAVEOPT instruction) and load the x87 FPU and SSE state for the current task (using an FXRSTOR or XRSOTR instruction). If the task never encounters an x87 FPU, MMX, or SSE instruction, the device-not-available exception will not be raised and a task state will not be saved/restored unnecessarily.

NOTE

The CRC32 and POPCNT instructions do not operate on the x87 FPU or SSE state. They operate on the general-purpose registers and are not involved with the techniques described above.

The TS flag can be set either explicitly (by executing a MOV instruction to control register CR0) or implicitly (using the IA-32 architecture's native task switching mechanism). When the native task switching mechanism is used, the processor automatically sets the TS flag on a task switch. After the device-not-available handler has saved the x87 FPU and SSE state, it should execute the CLTS instruction to clear the TS flag.

14.5 THE XSAVE FEATURE SET AND PROCESSOR EXTENDED STATE MANAGEMENT

The architecture of XSAVE feature set is described in CHAPTER 13 of *Intel® 64 and IA-32 Architectures Software Developer's Manual, Volume 1*. The XSAVE feature set includes the following:

- An extensible data layout for existing and future processor state extensions. The layout of the XSAVE area extends from the 512-byte FXSAVE/FXRSTOR layout to provide compatibility and migration path from managing the legacy FXSAVE/FXRSTOR area. The XSAVE area is described in more detail in Section 13.4 of the *Intel® 64 and IA-32 Architectures Software Developer's Manual, Volume 1*.
- CPUID enhancements for feature enumeration. See Section 13.2 of the *Intel® 64 and IA-32 Architectures Software Developer's Manual, Volume 1*.

- Control register enhancement and dedicated register for enabling each processor extended state. See Section 13.3 of the *Intel® 64 and IA-32 Architectures Software Developer's Manual, Volume 1*.
- Instructions to save state to and restore state from the XSAVE area. See Section 13.7 through Section 13.9 of the *Intel® 64 and IA-32 Architectures Software Developer's Manual, Volume 1*.

Operating systems can utilize XSAVE feature set to manage both FP/SSE state and processor extended states. CPUID leaf 0DH enumerates XSAVE feature set related information. The following guidelines provide the steps an operating system needs to take to support legacy FP/SSE states and processor extended states.

1. Check that the processor supports the XSAVE feature set
2. Determine the set of XSAVE managed features that the operating system intends to enable and calculate the size of the buffer needed to save/restore the states during context switch and other flows
3. Enable use of XSAVE feature set and XSAVE managed features
4. Provide an initialization for the XSAVE managed feature state components
5. Provide (if necessary) required exception handlers for exceptions generated each of the XSAVE managed features.

14.5.1 Checking the Support for XSAVE Feature Set

Support for XSAVE Feature set is enumerated in CPUID.1.ECX.XSAVE[bit 26]. Enumeration of this bit indicates that the processor supports XSAVE/XRSTOR instructions to manage state and XSETBV/XGETBV on XCR0 to enable and get enabled states. An operating system needs to enable XSAVE feature set as described later.

Additionally, CPUID.(EAX=0DH, ECX=1).EAX enumerates additional XSAVE sub features such as optimized save, compaction, and supervisor state support. The following table summarizes XSAVE sub features. Once an operating system enables XSAVE feature set, all the sub-features enumerated are also available. There is no need to enable each additional sub feature.

Table 14-3. CPUID.(EAX=0DH, ECX=1) EAX Bit Assignment

EAX Bit Position	Meaning
0	If set, indicates availability of the XSAVEOPT instruction.
1	If set, indicates availability of the XSAVEC instruction and the corresponding compaction enhancements to the legacy XRSTOR instruction.
2	If set, indicates support for execution of XGETBV with ECX=1. This execution returns the state-component bitmap XINUSE. If XINUSE[i] = 0, state component i is in its initial configuration. Execution of XSETBV with ECX=1 causes a #GP.
3	If set, indicates support for XSAVES/XRSTORS and IA32_XSS MSR
31:4	Reserved

14.5.2 Determining the XSAVE Managed Feature States And The Required Buffer Size

Each XSAVE managed feature has one or more state components associated with it. An operating system policy needs to determine the XSAVE managed features to support and determine the corresponding state components to enable. When determining the XSAVE managed features to support, operating system needs to take into account the dependencies between them (e.g., AVX feature depends on SSE feature). Similarly, when a XSAVE managed feature has more than one state component, all of them need to be enabled. Each logical processor enumerates supported XSAVE state components in CPUID.(EAX=0DH, ECX=0).EDX:EAX. An operating system may enable all or a subset of the state components enumerated by the processor based on the OS policy.

The size of the memory buffer needed to save enabled XSAVE state components depends on whether the OS opts-in to use compacted format or not. Section 13.4.3 of the *Intel® 64 and IA-32 Architectures Software Developer's Manual, Volume 1* describes the layout of the extended region of the XSAVE area.

14.5.3 Enable the Use Of XSAVE Feature Set And XSAVE State Components

Operating systems need to enable the use of XSAVE feature set by writing to CR4.OSXSAVE[bit 18] to enable XSETBV/XGETBV instructions to access XCR0 and to support processor extended state management using XSAVE/XRSTOR. When the XSAVE feature set is enabled, all enumerated XSAVE sub features such as optimized save, compaction, and supervisor state support are also enabled. Operating systems also need to enable the XSAVE state components in XCR0 using the XSETBV instruction.

XSAVE state components can subsequently be disabled in XCR0. However, disabling state components of AVX or AVX-512 that are not in initial configuration may incur power and performance penalty on SSE and AVX instructions respectively. If AVX state is disabled when it is not in its initial configuration, subsequent SSE instructions may incur a penalty. If AVX-512 state is disabled when it is not in its initial configuration, subsequent SSE and AVX instructions may incur a penalty. It is recommended that the operating systems and VMM set AVX or AVX-512 state components to their initial configuration before disabling them. This can be achieved by one of the two methods below.

- Using XRSTOR: Operating system or VMM can set the state of AVX or AVX-512 state components using XRSTOR instruction before disabling them in XCR0.
- Using VZEROUPPER: Operating system or VMM can set AVX and AVX-512 state components to their initial configuration using VZEROUPPER instruction before disabling them in XCR0. Note that this will set both AVX and AVX-512 state components to their initial configuration. If the intent is to only disable AVX-512 state, Operating system or VMM will need to save AVX state before executing VZEROUPPER and restore it afterwards.

14.5.4 Provide an Initialization for the XSAVE State Components

The XSAVE header of a newly allocated XSAVE area should be initialized to all zeroes before saving context. An operating system may choose to establish beginning state-component values for a task by executing XRSTOR from an XSAVE area that the OS has configured. If it is desired to begin state component i in its initial configuration, the OS should clear bit i in the XSTATE_BV field in the XSAVE header; otherwise, it should set that bit and place the desired beginning value in the appropriate location in the XSAVE area.

When a buffer is allocated for compacted size, software must ensure that the XCOMP_BV field is setup correctly before restoring from the buffer. Bit 63 of the XCOMP_BV field indicates that the save area is in the compacted format and the remaining bits indicate the states that have space allocated in the save area. If the buffer is first used to save the state in compacted format, then the save instructions will setup the XCOMP_BV field appropriately. If the buffer is first used to restore the state, then software must set up the XCOMP_BV field.

14.5.5 Providing the Required Exception Handlers

Instructions part of each XSAVE managed features may generate exceptions and operating system may need to enable such exceptions and provide handlers for them. Section 14.8 describes feature specific OS requirements for each XSAVE managed features.

14.6 INTEROPERABILITY OF THE XSAVE FEATURE SET AND FXSAVE/FXRSTOR

The FXSAVE instruction writes x87 FPU and SSE state information to a 512-byte FXSAVE save area. FXRSTOR restores the processor's x87 FPU and SSE states from an FXSAVE area. The XSAVE features set supports x87 FPU and SSE states using the same layout as the FXSAVE area to provide interoperability of FXSAVE versus XSAVE, and FXRSTOR versus XRSTOR. The XSAVE feature set allows system software to manage SSE state independent of x87 FPU states. Thus system software that had been using FXSAVE and FXRSTOR to manage x87 FPU and SSE states can transition to using the XSAVE feature set to manage x87 FPU, SSE, and other processor extended states in a systematic and forward-looking manner. See Section 10.5 and Chapter 13 of the *Intel® 64 and IA-32 Architectures Software Developer's Manual, Volume 1* for more details.

System software can implement forward-looking processor extended state management using the XSAVE feature set. In this case, system software must specify the bit vector mask in EDX:EAX appropriately when executing XSAVE/XRSTOR instructions.

For instance, the OS can supply instructions in the XSAVE feature set with a bit vector in EDX:EAX with the two least significant bits (corresponding to x87 FPU and SSE state) equal to 0. Then, the XSAVE instruction will not write the processor's x87 FPU and SSE state into memory. Similarly, the XRSTOR instruction executed with a value in EDX:EAX with the least two significant bit equal to 0 will not restore nor initialize the processor's x87 FPU and SSE state.

The processor's action as a result of executing XRSTOR is given in Section 13.8 of the *Intel® 64 and IA-32 Architectures Software Developer's Manual, Volume 1*. The instruction may be used to initialize x87 FPU or XMM registers. When the MXCSR register is updated from memory, reserved bit checking is enforced. The saving/restoring of MXCSR is bound to the SSE state, independent of the x87 FPU state. The action of XSAVE is given in Section 13.7 of the *Intel® 64 and IA-32 Architectures Software Developer's Manual, Volume 1*.

14.7 THE XSAVE FEATURE SET AND PROCESSOR SUPERVISOR STATE MANAGEMENT

Supervisor state is a processor state that is only accessible in ring 0. An extension to the XSAVE feature set, enumerated by CPUID.(EAX=0DH, ECX=1).EAX[bit 3] allows the management of the supervisor states using the XSAVE feature set. See Chapter 13 of *Intel® 64 and IA-32 Architectures Software Developer's Manual, Volume 1* for the details of the supervisor state XSAVE feature set extension. The supervisor state extension includes the following:

- CPUID enhancements to enumerate the set of supervisor states and their sizes that can be managed by the XSAVE feature set.
- The IA32_XSS MSR to enable the XSAVE feature set to manage one or more enumerated supervisor states.
- A pair of privileged save/restore instructions, XSAVES and XRSTORS, to save/restore supervisor states along with other XSAVE managed feature states.

The guidelines to enable the XSAVE feature set to manage supervisor state are very similar to the steps outlined in Section 13.6 with the differences noted below. The set of supervisor states that can be managed by the XSAVE feature set is enumerated in (EAX=0DH, ECX=1).EDX:ECX. XSAVE managed supervisor states are enabled in the IA32_XSS MSR instead of the XCR0 control register. There are semantic differences between user states enabled in XCR0 and supervisor state enabled in the IA32_XSS MSR. A supervisor state enabled in the IA32_XSS MSR:

- May be accessed via other mechanisms such as RDMSR/WRMSR even when they are not enabled in the IA32_XSS MSR. Enabling a supervisor state in the IA32_XSS MSR merely indicates that the state can be saved/restored using XSAVES/XRSTORS instructions.
- May have side effects when saving/restoring the state such as disabling/enabling the feature associated with the state. This behavior is feature specific and will be documented along with the feature description.
- May generate faults when saving/restoring the state. XSAVES/XRSTORS will follow the faulting behavior of RDMSR/WRMSR respectively if the corresponding state is also accessible using RDMSR/WRMSR.
- XRSTORS may fault when restoring the state for supervisor features that are already enabled via feature specific mechanisms. This behavior is feature specific and will be documented along with the feature description.

When a supervisor state is disabled via a feature specific mechanism, the state does not automatically get marked as INIT. Hence XSAVES/XRSTORS will continue to save/restore the state subject to available optimizations. If the software does not intend to preserve the state when it disables the feature, it should initialize it to hardware INIT value with the XRSTORS instruction so that XSAVES/XRSTORS perform optimally for that state.

14.8 SYSTEM PROGRAMMING FOR XSAVE MANAGED FEATURES

This section describes system programming requirement for each XSAVE managed features that are feature specific, such as exception handling.

14.8.1 Intel® Advanced Vector Extensions (Intel® AVX)

Intel AVX instructions comprises of 256-bit and 128-bit instructions that operates on 256-bit YMM registers. The XSAVE feature set allows software to save and restore the state of these registers. See Chapter 13 of the *Intel® 64 and IA-32 Architectures Software Developer's Manual, Volume 1*.

For processors that support YMM states, the YMM state exists in all operating modes. However, the available instruction interfaces to access YMM states may vary in different modes.

Operating systems must use the XSAVE feature set for YMM state management. The XSAVE feature set also provides flexible and efficient interface to manage XMM/MXCSR states and x87 FPU states in conjunction with newer processor extended states like YMM states. Operating systems may need to be aware of the following when supporting AVX.

- Saving/Restoring AVX state in non-compacted format without SSE state will also save/restore MXCSR even though MXCSR is not part of AVX state. This does not happen when compacted format is used.
- Few AVX instructions such as VZEROUPPER/VZEROALL may operate on future expansion of YMM registers.

An operating system must enable its YMM state management to support AVX and any 256-bit extensions that operate on YMM registers. Otherwise, an attempt to execute an instruction in AVX extensions (including an enhanced 128-bit SIMD instructions using VEX encoding) will cause a #UD exception.

AVX instructions may generate SIMD floating-point exceptions. An OS must enable SIMD floating-point exception support by setting CR4.OSXMMEXCPT[bit 10]=1.

14.8.2 Intel® Advanced Vector Extensions 512 (Intel® AVX-512)

Intel AVX-512 instructions are encoded using EVEX prefix. The EVEX encoding scheme can support 512-bit, 256-bit and 128-bit instructions that operate on opmask, ZMM, YMM, and XMM registers.

For processors that support the Intel AVX-512 family of instructions, the extended processor states (ZMM and opmask registers) exist in all operating modes. However, the access to these states may vary in different modes. The processor's support for instruction extensions that employ EVEX prefix encoding is independent of the processor's support for using XSAVE feature set on those states.

Instructions requiring EVEX prefix encoding are generally supported in 64-bit, 32-bit modes, and 16-bit protected mode. They are not supported in Real mode, Virtual-8086 mode or entering into SMM mode. Note that bits MAXVL-1:256 (511:256) of ZMM register state are maintained across transitions into and out of these modes. Because the XSAVE feature set instruction can operate in all operating modes, it is possible that the processor's ZMM register state can be modified by software in any operating mode by executing XRSTOR.

Operating systems must use the XSAVE/XRSTOR/XSAVEOPT instructions for ZMM and opmask state management. An OS must enable its ZMM and opmask state management to support Intel AVX-512 Foundation instructions. Otherwise, an attempt to execute an instruction in Intel AVX-512 Foundation instructions (including a scalar 128-bit SIMD instructions using EVEX encoding) will cause a #UD exception. An operating system, which enables the AVX-512 state to support Intel AVX-512 Foundation instructions, is also sufficient to support the rest of the Intel AVX-512 family of instructions. Note that even though ZMM8-ZMM31 are not accessible in 32 bit mode, a 32 bit OS is still required to allocate memory for the entire ZMM state.

Intel AVX-512 Foundation instructions may generate SIMD floating-point exceptions. An OS must enable SIMD floating-point exception support by setting CR4.OSXMMEXCPT[bit 10]=1.

CHAPTER 15
POWER AND THERMAL MANAGEMENT

This chapter describes facilities of Intel 64 and IA-32 architecture used for power management and thermal monitoring.

15.1 ENHANCED INTEL SPEEDSTEP® TECHNOLOGY

Enhanced Intel SpeedStep® Technology was introduced in the Pentium M processor. The technology enables the management of processor power consumption via performance state transitions. These states are defined as discrete operating points associated with different voltages and frequencies.

Enhanced Intel SpeedStep Technology differs from previous generations of Intel SpeedStep® Technology in two ways:

- Centralization of the control mechanism and software interface in the processor by using model-specific registers.
- Reduced hardware overhead; this permits more frequent performance state transitions.

Previous generations of the Intel SpeedStep Technology require processors to be a deep sleep state, holding off bus master transfers for the duration of a performance state transition. Performance state transitions under the Enhanced Intel SpeedStep Technology are discrete transitions to a new target frequency.

Support is indicated by CPUID, using ECX feature bit 07. Enhanced Intel SpeedStep Technology is enabled by setting IA32_MISC_ENABLE MSR, bit 16. On reset, bit 16 of IA32_MISC_ENABLE MSR is cleared.

15.1.1 Software Interface For Initiating Performance State Transitions

State transitions are initiated by writing a 16-bit value to the IA32_PERF_CTL register, see Figure 15-2. If a transition is already in progress, transition to a new value will subsequently take effect.

Reads of IA32_PERF_CTL determine the last targeted operating point. The current operating point can be read from IA32_PERF_STATUS. IA32_PERF_STATUS is updated dynamically.

The 16-bit encoding that defines valid operating points is model-specific. Applications and performance tools are not expected to use either IA32_PERF_CTL or IA32_PERF_STATUS and should treat both as reserved. Performance monitoring tools can access model-specific events and report the occurrences of state transitions.

15.2 P-STATE HARDWARE COORDINATION

The Advanced Configuration and Power Interface (ACPI) defines performance states (P-states) that are used to facilitate system software's ability to manage processor power consumption. Different P-states correspond to different performance levels that are applied while the processor is actively executing instructions. Enhanced Intel SpeedStep Technology supports P-states by providing software interfaces that control the operating frequency and voltage of a processor.

With multiple processor cores residing in the same physical package, hardware dependencies may exist for a subset of logical processors on a platform. These dependencies may impose requirements that impact the coordination of P-state transitions. As a result, multi-core processors may require an OS to provide additional software support for coordinating P-state transitions for those subsets of logical processors.

ACPI firmware can choose to expose P-states as dependent and hardware-coordinated to OS power management (OSPM) policy. To support OSPMs, multi-core processors must have additional built-in support for P-state hardware coordination and feedback.

Intel 64 and IA-32 processors with dependent P-states amongst a subset of logical processors permit hardware coordination of P-states and provide a hardware-coordination feedback mechanism using IA32_MPERF MSR and

IA32_APERF MSR. See Figure 15-1 for an overview of the two 64-bit MSRs and the bullets below for a detailed description.

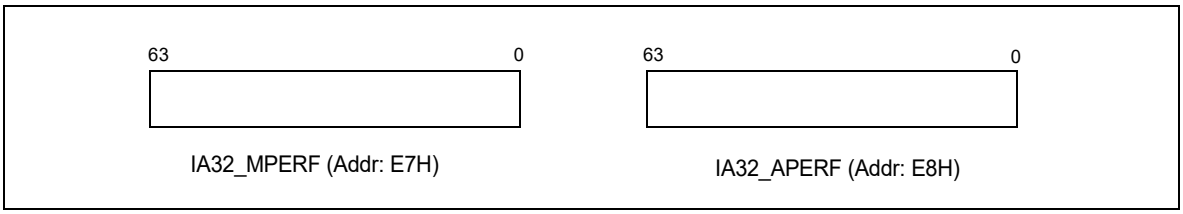

Figure 15-1. IA32_MPERF MSR and IA32_APERF MSR for P-state Coordination

- Use CPUID to check the P-State hardware coordination feedback capability bit. CPUID.06H.ECX[Bit 0] = 1 indicates IA32_MPERF MSR and IA32_APERF MSR are present.
- IA32_MPERF MSR (E7H) increments in proportion to a fixed frequency, which is configured when the processor is booted.
- IA32_APERF MSR (E8H) increments in proportion to actual performance, while accounting for hardware coordination of P-state and TM1/TM2; or software initiated throttling.
- The MSRs are per logical processor; they measure performance only when the targeted processor is in the C0 state.
- Only the IA32_APERF/IA32_MPERF ratio is architecturally defined; software should not attach meaning to the content of the individual of IA32_APERF or IA32_MPERF MSRs.
- When either MSR overflows, both MSRs are reset to zero and continue to increment.
- Both MSRs are full 64-bits counters. Each MSR can be written to independently. However, software should follow the guidelines illustrated in Example 15-1.

If P-states are exposed by the BIOS as hardware coordinated, software is expected to confirm processor support for P-state hardware coordination feedback and use the feedback mechanism to make P-state decisions. The OSPM is expected to either save away the current MSR values (for determination of the delta of the counter ratio at a later time) or reset both MSRs (execute WRMSR with 0 to these MSRs individually) at the start of the time window used for making the P-state decision. When not resetting the values, overflow of the MSRs can be detected by checking whether the new values read are less than the previously saved values.

Example 15-1 demonstrates steps for using the hardware feedback mechanism provided by IA32_APERF MSR and IA32_MPERF MSR to determine a target P-state.

Example 15-1. Determine Target P-state From Hardware Coordinated Feedback

```
DWORD PercentBusy; // Percentage of processor time not idle.
    // Measure "PercentBusy" during previous sampling window.
    // Typically, "PercentBusy" is measure over a time scale suitable for
    // power management decisions
    //
    // RDMSR of MCNT and ACNT should be performed without delay.
    // Software needs to exercise care to avoid delays between
    // the two RDMSRs (for example, interrupts).
    MCNT = RDMSR(IA32_MPERF);
    ACNT = RDMSR(IA32_APERF);

    // PercentPerformance indicates the percentage of the processor
    // that is in use. The calculation is based on the PercentBusy,
    // that is the percentage of processor time not idle and the P-state
    // hardware coordinated feedback using the ACNT/MCNT ratio.
    // Note that both values need to be calculated over the same
```

```
// time window.
      PercentPerformance = PercentBusy * (ACNT/MCNT);


// This example does not cover the additional logic or algorithms
//  necessary to coordinate multiple logical processors to a target P-state.

TargetPstate = FindPstate(PercentPerformance);

if (TargetPstate ≠ currentPstate) {
      SetPState(TargetPstate);
}
// WRMSR of MCNT and ACNT should be performed without delay.
// Software needs to exercise care to avoid delays between
// the two WRMSRs (for example, interrupts).
 WRMSR(IA32_MPERF, 0);
 WRMSR(IA32_APERF, 0);
```

15.3 SYSTEM SOFTWARE CONSIDERATIONS AND OPPORTUNISTIC PROCESSOR PERFORMANCE OPERATION

An Intel 64 processor may support a form of processor operation that takes advantage of design headroom to opportunistically increase performance. The Intel® Turbo Boost Technology can convert thermal headroom into higher performance across multi-threaded and single-threaded workloads. The Intel® Dynamic Acceleration Technology feature can convert thermal headroom into higher performance if only one thread is active.

15.3.1 Intel® Dynamic Acceleration Technology

The Intel Core 2 Duo processor T 7700 introduces Intel Dynamic Acceleration Technology. Intel Dynamic Acceleration Technology takes advantage of thermal design headroom and opportunistically allows a single core to operate at a higher performance level when the operating system requests increased performance.

15.3.2 System Software Interfaces for Opportunistic Processor Performance Operation

Opportunistic processor performance operation, applicable to Intel Dynamic Acceleration Technology and Intel® Turbo Boost Technology, has the following characteristics:

- A transition from a normal state of operation (e.g., Intel Dynamic Acceleration Technology/Turbo mode disengaged) to a target state is not guaranteed, but may occur opportunistically after the corresponding enable mechanism is activated, the headroom is available and certain criteria are met.
- The opportunistic processor performance operation is generally transparent to most application software.
- System software (BIOS and Operating system) must be aware of hardware support for opportunistic processor performance operation and may need to temporarily disengage opportunistic processor performance operation when it requires more predictable processor operation.
- When opportunistic processor performance operation is engaged, the OS should use hardware coordination feedback mechanisms to prevent un-intended policy effects if it is activated during inappropriate situations.

15.3.2.1 Discover Hardware Support and Enabling of Opportunistic Processor Performance Operation

If an Intel 64 processor has hardware support for opportunistic processor performance operation, the power-on default state of IA32_MISC_ENABLE[38] indicates the presence of such hardware support. For Intel 64 processors that support opportunistic processor performance operation, the default value is 1, indicating its presence. For processors that do not support opportunistic processor performance operation, the default value is 0. The power-

on default value of IA32_MISC_ENABLE[38] allows BIOS to detect the presence of hardware support of opportunistic processor performance operation.

IA32_MISC_ENABLE[38] is shared across all logical processors in a physical package. It is written by BIOS during platform initiation to enable/disable opportunistic processor performance operation in conjunction of OS power management capabilities, see Section 15.3.2.2. BIOS can set IA32_MISC_ENABLE[38] with 1 to disable opportunistic processor performance operation; it must clear the default value of IA32_MISC_ENABLE[38] to 0 to enable opportunistic processor performance operation. OS and applications must use CPUID leaf 06H if it needs to detect processors that have opportunistic processor performance operation enabled.

When CPUID is executed with EAX = 06H on input, Bit 1 of EAX in Leaf 06H (i.e., CPUID.06H:EAX[1]) indicates opportunistic processor performance operation, such as Intel Dynamic Acceleration Technology, has been enabled by BIOS.

Opportunistic processor performance operation can be disabled by setting bit 38 of IA32_MISC_ENABLE. This mechanism is intended for BIOS only. If IA32_MISC_ENABLE[38] is set, CPUID.06H:EAX[1] will return 0.

15.3.2.2 OS Control of Opportunistic Processor Performance Operation

There may be phases of software execution in which system software cannot tolerate the non-deterministic aspects of opportunistic processor performance operation. For example, when calibrating a real-time workload to make a CPU reservation request to the OS, it may be undesirable to allow the possibility of the processor delivering increased performance that cannot be sustained after the calibration phase.

System software can temporarily disengage opportunistic processor performance operation by setting bit 32 of the IA32_PERF_CTL MSR (0199H), using a read-modify-write sequence on the MSR. The opportunistic processor performance operation can be re-engaged by clearing bit 32 in IA32_PERF_CTL MSR, using a read-modify-write sequence. The DISENAGE bit in IA32_PERF_CTL is not reflected in bit 32 of the IA32_PERF_STATUS MSR (0198H), and it is not shared between logical processors in a physical package. In order for OS to engage Intel Dynamic Acceleration Technology/Turbo mode, the BIOS must:

- Enable opportunistic processor performance operation, as described in Section 15.3.2.1.
- Expose the operating points associated with Intel Dynamic Acceleration Technology/Turbo mode to the OS.

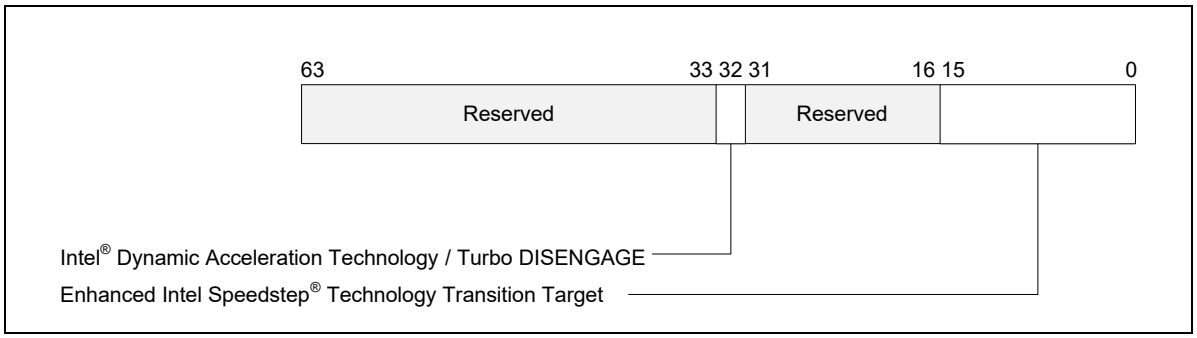

Figure 15-2. IA32_PERF_CTL Register

15.3.2.3 Required Changes to OS Power Management P-State Policy

Intel Dynamic Acceleration Technology and Intel Turbo Boost Technology can provide opportunistic performance greater than the performance level corresponding to the Processor Base frequency of the processor (see CPUID's processor frequency information). System software can use a pair of MSRs to observe performance feedback. Software must query for the presence of IA32_APERF and IA32_MPERF (see Section 15.2). The ratio between IA32_APERF and IA32_MPERF is architecturally defined and a value greater than unity indicates performance increase occurred during the observation period due to Intel Dynamic Acceleration Technology. Without incorporating such performance feedback, the target P-state evaluation algorithm can result in a non-optimal P-state target.

There are other scenarios under which OS power management may want to disable Intel Dynamic Acceleration Technology, some of these are listed below:

- When engaging ACPI defined passive thermal management, it may be more effective to disable Intel Dynamic Acceleration Technology for the duration of passive thermal management.
- When the user has indicated a policy preference of power savings over performance, OS power management may want to disable Intel Dynamic Acceleration Technology while that policy is in effect.

15.3.3 Intel® Turbo Boost Technology

Intel Turbo Boost Technology is supported in Intel Core i7 processors and Intel Xeon processors based on Nehalem microarchitecture. It uses the same principle of leveraging thermal headroom to dynamically increase processor performance for single-threaded and multi-threaded/multi-tasking environment. The programming interface described in Section 15.3.2 also applies to Intel Turbo Boost Technology.

15.3.4 Performance and Energy Bias Hint Support

Intel 64 processors may support additional software hint to guide the hardware heuristic of power management features to favor increasing dynamic performance or conserve energy consumption.

Software can detect the processor's capability to support the performance-energy bias preference hint by examining bit 3 of ECX in CPUID leaf 6. The processor supports this capability if CPUID.06H:ECX.SETBH[bit 3] is set and it also implies the presence of a new architectural MSR called IA32_ENERGY_PERF_BIAS (1B0H).

Software can program the lowest four bits of IA32_ENERGY_PERF_BIAS MSR with a value from 0 - 15. The values represent a sliding scale, where a value of 0 (the default reset value) corresponds to a hint preference for highest performance and a value of 15 corresponds to the maximum energy savings. A value of 7 roughly translates into a hint to balance performance with energy consumption.

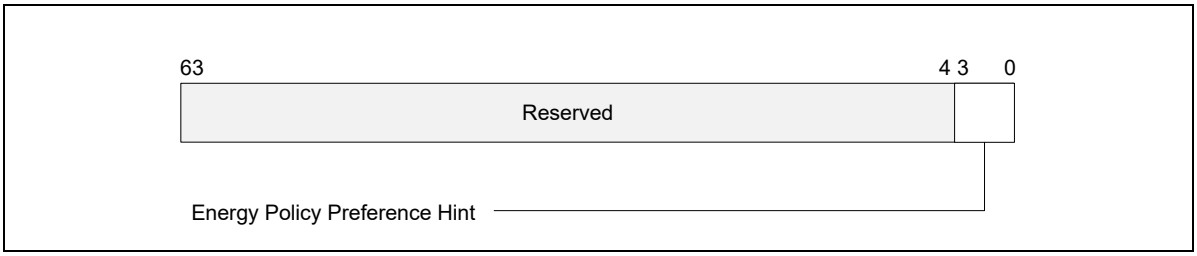

Figure 15-3. IA32_ENERGY_PERF_BIAS Register

The layout of IA32_ENERGY_PERF_BIAS is shown in Figure 15-3. The scope of IA32_ENERGY_PERF_BIAS is per logical processor, which means that each of the logical processors in the package can be programmed with a different value. This may be especially important in virtualization scenarios, where the performance / energy requirements of one logical processor may differ from the other. Conflicting "hints" from various logical processors at higher hierarchy level will be resolved in favor of performance over energy savings.

Software can use whatever criteria it sees fit to program the MSR with an appropriate value. However, the value only serves as a hint to the hardware and the actual impact on performance and energy savings is model specific.

15.4 HARDWARE-CONTROLLED PERFORMANCE STATES (HWP)

Intel processors may contain support for Hardware-Controlled Performance States (HWP), which autonomously selects performance states while utilizing OS supplied performance guidance hints. The Enhanced Intel Speed-Step® Technology provides a means for the OS to control and monitor discrete frequency-based operating points via the IA32_PERF_CTL and IA32_PERF_STATUS MSRs.

In contrast, HWP is an implementation of the ACPI-defined Collaborative Processor Performance Control (CPPC), which specifies that the platform enumerates a continuous, abstract unit-less, performance value scale that is not tied to a specific performance state / frequency by definition. While the enumerated scale is roughly linear in terms of a delivered integer workload performance result, the OS is required to characterize the performance value range to comprehend the delivered performance for an applied workload.

When HWP is enabled, the processor autonomously selects performance states as deemed appropriate for the applied workload and with consideration of constraining hints that are programmed by the OS. These OS-provided hints include minimum and maximum performance limits, preference towards energy efficiency or performance, and the specification of a relevant workload history observation time window. The means for the OS to override HWP's autonomous selection of performance state with a specific desired performance target is also provided, however, the effective frequency delivered is subject to the result of energy efficiency and performance optimizations.

15.4.1 HWP Programming Interfaces

The programming interfaces provided by HWP include the following:

- The CPUID instruction allows software to discover the presence of HWP support in an Intel processor. Specifically, execute CPUID instruction with EAX=06H as input will return 5 bit flags covering the following aspects in bits 7 through 11 of CPUID.06H:EAX:
  - Availability of HWP baseline resource and capability, CPUID.06H:EAX[bit 7]: If this bit is set, HWP provides several new architectural MSRs: IA32_PM_ENABLE, IA32_HWP_CAPABILITIES, IA32_HWP_REQUEST, IA32_HWP_STATUS.
  - Availability of HWP Notification upon dynamic Guaranteed Performance change, CPUID.06H:EAX[bit 8]: If this bit is set, HWP provides IA32_HWP_INTERRUPT MSR to enable interrupt generation due to dynamic Performance changes and excursions.
  - Availability of HWP Activity window control, CPUID.06H:EAX[bit 9]: If this bit is set, HWP allows software to program activity window in the IA32_HWP_REQUEST MSR.
  - Availability of HWP energy/performance preference control, CPUID.06H:EAX[bit 10]: If this bit is set, HWP allows software to set an energy/performance preference hint in the IA32_HWP_REQUEST MSR.
  - Availability of HWP package level control, CPUID.06H:EAX[bit 11]:If this bit is set, HWP provides the IA32_HWP_REQUEST_PKG MSR to convey OS Power Management's control hints for all logical processors in the physical package.

Table 15-1. Architectural and Non-Architectural MSRs Related to HWP

Address	Architectural	Register Name	Description
770H	Y	IA32_PM_ENABLE	Enable/Disable HWP.
771H	Y	IA32_HWP_CAPABILITIES	Enumerates the HWP performance range (static and dynamic).
772H	Y	IA32_HWP_REQUEST_PKG	Conveys OSPM's control hints (Min, Max, Activity Window, Energy Performance Preference, Desired) for all logical processor in the physical package.
773H	Y	IA32_HWP_INTERRUPT	Controls HWP native interrupt generation (Guaranteed Performance changes, excursions).
774H	Y	IA32_HWP_REQUEST	Conveys OSPM's control hints (Min, Max, Activity Window, Energy Performance Preference, Desired) for a single logical processor.
775H	Y	IA32_HWP_PECI_REQUEST_INFO	Conveys embedded system controller requests to override some of the OS HWP Request settings via the PECI mechanism.
777H	Y	IA32_HWP_STATUS	Status bits indicating changes to Guaranteed Performance and excursions to Minimum Performance.
19CH	Y	IA32_THERM_STATUS[bits 15:12]	Conveys reasons for performance excursions.
64EH	N	MSR_PPERF	Productive Performance Count.

- Additionally, HWP may provide a non-architectural MSR, MSR_PPERF, which provides a quantitative metric to software of hardware's view of workload scalability. This hardware's view of workload scalability is implementation specific.

15.4.2 Enabling HWP

The layout of the IA32_PM_ENABLE MSR is shown in Figure 15-4. The bit fields are described below:

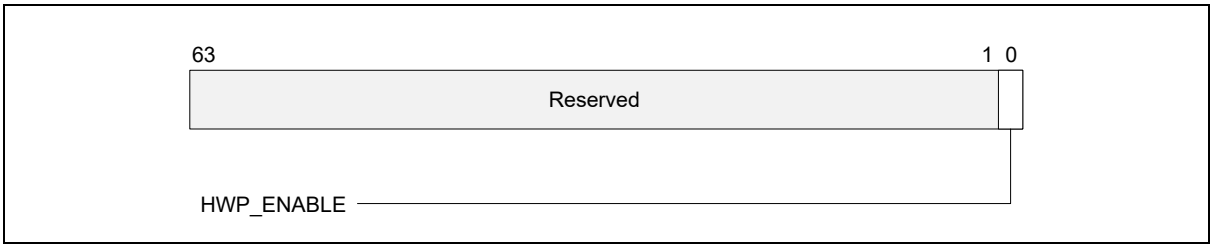

Figure 15-4. IA32_PM_ENABLE MSR

- **HWP_ENABLE (bit 0, R/W1Once)** — Software sets this bit to enable HWP with autonomous selection of processor P-States. When set, the processor will disregard input from the legacy performance control interface (IA32_PERF_CTL). Note this bit can only be enabled once from the default value. Once set, writes to the HWP_ENABLE bit are ignored. Only RESET will clear this bit. Default = zero (0).
- Bits 63:1 are reserved and must be zero.

After software queries CPUID and verifies the processor's support of HWP, system software can write 1 to IA32_PM_ENABLE.HWP_ENABLE (bit 0) to enable hardware controlled performance states. The default value of IA32_PM_ENABLE MSR at power-on is 0, i.e., HWP is disabled.

Additional MSRs associated with HWP may only be accessed after HWP is enabled, with the exception of IA32_HWP_INTERRUPT and MSR_PPERF. Accessing the IA32_HWP_INTERRUPT MSR requires only HWP is present as enumerated by CPUID but does not require enabling HWP.

IA32_PM_ENABLE is a package level MSR, i.e., writing to it from any logical processor within a package affects all logical processors within that package.

15.4.3 HWP Performance Range and Dynamic Capabilities

The OS reads the IA32_HWP_CAPABILITIES MSR to comprehend the limits of the HWP-managed performance range as well as the dynamic capability, which may change during processor operation. The enumerated performance range values reported by IA32_HWP_CAPABILITIES directly map to initial frequency targets (prior to workload-specific frequency optimizations of HWP). However the mapping is processor family specific.

The layout of the IA32_HWP_CAPABILITIES MSR is shown in Figure 15-5. The bit fields are described below:

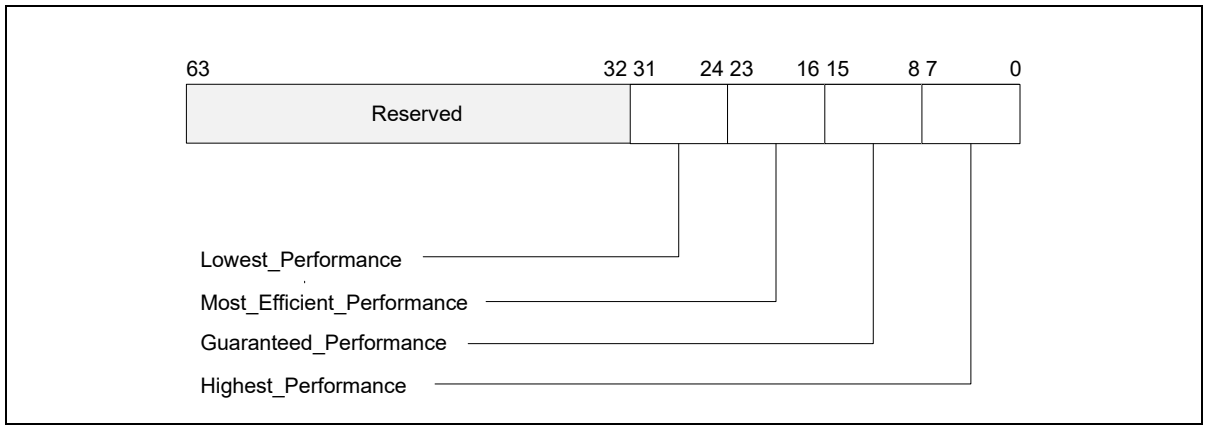

Figure 15-5. IA32_HWP_CAPABILITIES Register

- **Highest_Performance (bits 7:0, RO)** — Value for the maximum non-guaranteed performance level.
- **Guaranteed_Performance (bits 15:8, RO)** — Current value for the guaranteed performance level. This value can change dynamically as a result of internal or external constraints, e.g., thermal or power limits.
- **Most_Efficient_Performance (bits 23:16, RO)** — Current value of the most efficient performance level. This value can change dynamically as a result of workload characteristics.
- **Lowest_Performance (bits 31:24, RO)** — Value for the lowest performance level that software can program to IA32_HWP_REQUEST.
- Bits 63:32 are reserved and must be zero.

The value returned in the **Guaranteed_Performance** field is hardware's best-effort approximation of the available performance given current operating constraints. Changes to the Guaranteed_Performance value will primarily occur due to a shift in operational mode. This includes a power or other limit applied by an external agent, e.g., RAPL (see Figure 15.10.1), or the setting of a Configurable TDP level (see model-specific controls related to Programmable TDP Limit in Chapter 2, "Model-Specific Registers (MSRs)" in the *Intel® 64 and IA-32 Architectures Software Developer's Manual, Volume 4*.). Notification of a change to the Guaranteed_Performance occurs via interrupt (if configured) and the IA32_HWP_Status MSR. Changes to Guaranteed_Performance are indicated when a macroscopically meaningful change in performance occurs i.e., sustained for greater than one second. Consequently, notification of a change in Guaranteed Performance will typically occur no more frequently than once per second. Rapid changes in platform configuration, e.g., docking / undocking, with corresponding changes to a Configurable TDP level could potentially cause more frequent notifications.

The value returned by the **Most_Efficient_Performance** field provides the OS with an indication of the practical lower limit for the IA32_HWP_REQUEST. The processor may not honor IA32_HWP_REQUEST.Maximum Performance settings below this value.

15.4.4 Managing HWP

15.4.4.1 IA32_HWP_REQUEST MSR (Address: 774H Logical Processor Scope)

Typically, the operating system controls HWP operation for each logical processor via the writing of control hints / constraints to the IA32_HWP_REQUEST MSR. The layout of the IA32_HWP_REQUEST MSR is shown in Figure 15-6. The bit fields are described below Figure 15-6.

Operating systems can control HWP by writing both IA32_HWP_REQUEST and IA32_HWP_REQUEST_PKG MSRs (see Section 15.4.4.2). Five valid bits within the IA32_HWP_REQUEST MSR let the operating system flexibly select which of its five hint / constraint fields should be derived by the processor from the IA32_HWP_REQUEST MSR and which should be derived from the IA32_HWP_REQUEST_PKG MSR. These five valid bits are supported if CPUID[6].EAX[17] is set.

When the IA32_HWP_REQUEST MSR Package Control bit is set, any valid bit that is NOT set indicates to the processor to use the respective field value from the IA32_HWP_REQUEST_PKG MSR. Otherwise, the values are derived from the IA32_HWP_REQUEST MSR. The valid bits are ignored when the IA32_HWP_REQUEST MSR Package Control bit is zero.

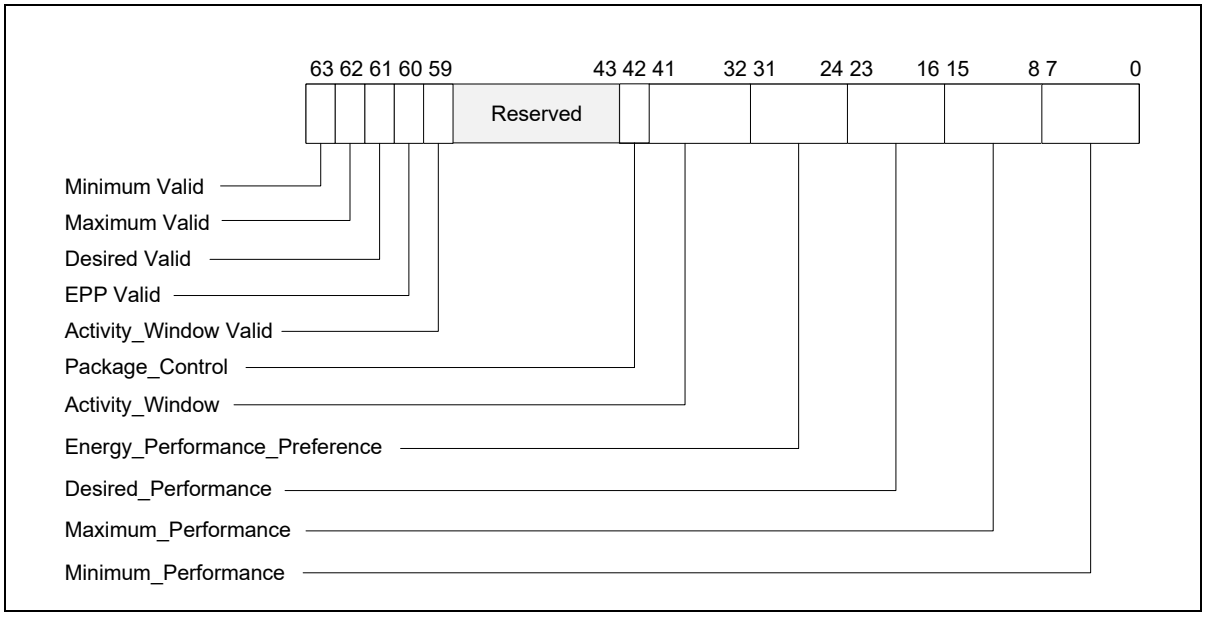

Figure 15-6. IA32_HWP_REQUEST Register

- **Minimum_Performance (bits 7:0, RW)** — Conveys a hint to the HWP hardware. The OS programs the minimum performance hint to achieve the required quality of service (QOS) or to meet a service level agreement (SLA) as needed. Note that an excursion below the level specified is possible due to hardware constraints. The default value of this field is IA32_HWP_CAPABILITIES.Lowest_Performance.
- **Maximum_Performance (bits 15:8, RW)** — Conveys a hint to the HWP hardware. The OS programs this field to limit the maximum performance that is expected to be supplied by the HWP hardware. Excursions above the limit requested by OS are possible due to hardware coordination between the processor cores and other components in the package. The default value of this field is IA32_HWP_CAPABILITIES.Highest_Performance.
- **Desired_Performance (bits 23:16, RW)** — Conveys a hint to the HWP hardware. When set to zero, hardware autonomous selection determines the performance target. When set to a non-zero value (between the range of Lowest_Performance and Highest_Performance of IA32_HWP_CAPABILITIES) conveys an explicit performance request hint to the hardware; effectively disabling HW Autonomous selection. The Desired_Performance input is non-constraining in terms of Performance and Energy Efficiency optimizations, which are independently controlled. The default value of this field is 0.
- **Energy_Performance_Preference (bits 31:24, RW)** — Conveys a hint to the HWP hardware. The OS may write a range of values from 0 (performance preference) to 0FFH (energy efficiency preference) to influence the rate of performance increase /decrease and the result of the hardware's energy efficiency and performance optimizations. The default value of this field is 80H. Note: If CPUID.06H:EAX[bit 10] indicates that this field is not supported, HWP uses the value of the IA32_ENERGY_PERF_BIAS MSR to determine the energy efficiency / performance preference.
- **Activity_Window (bits 41:32, RW)** — Conveys a hint to the HWP hardware specifying a moving workload history observation window for performance/frequency optimizations. If 0, the hardware will determine the appropriate window size. When writing a non-zero value to this field, this field is encoded in the format of bits 38:32 as a 7-bit mantissa and bits 41:39 as a 3-bit exponent value in powers of 10. The resultant value is in microseconds. Thus, the minimal/maximum activity window size is 1 microsecond/1270 seconds. Combined with the Energy_Performance_Preference input, Activity_Window influences the rate of performance increase

/ decrease. This non-zero hint only has meaning when Desired_Performance = 0. The default value of this field is 0.

- **Package_Control (bit 42, RW)** — When set, causes this logical processor's IA32_HWP_REQUEST control inputs to be derived from the IA32_HWP_REQUEST_PKG MSR.
- Bits 58:43 are reserved and must be zero.
- **Activity_Window Valid (bit 59, RW)** — When set, indicates to the processor to derive the Activity Window field value from the IA32_HWP_REQUEST MSR even if the package control bit is set. Otherwise, derive it from the IA32_HWP_REQUEST_PKG MSR. The default value of this field is 0.
- **EPP Valid (bit 60, RW)** — When set, indicates to the processor to derive the EPP field value from the IA32_HWP_REQUEST MSR even if the package control bit is set. Otherwise, derive it from the IA32_HWP_REQUEST_PKG MSR. The default value of this field is 0.
- **Desired Valid (bit 61, RW)** — When set, indicates to the processor to derive the Desired Performance field value from the IA32_HWP_REQUEST MSR even if the package control bit is set. Otherwise, derive it from the IA32_HWP_REQUEST_PKG MSR. The default value of this field is 0.
- **Maximum Valid (bit 62, RW)** — When set, indicates to the processor to derive the Maximum Performance field value from the IA32_HWP_REQUEST MSR even if the package control bit is set. Otherwise, derive it from the IA32_HWP_REQUEST_PKG MSR. The default value of this field is 0.
- **Minimum Valid (bit 63, RW)** — When set, indicates to the processor to derive the Minimum Performance field value from the IA32_HWP_REQUEST MSR even if the package control bit is set. Otherwise, derive it from the IA32_HWP_REQUEST_PKG MSR. The default value of this field is 0.

The HWP hardware clips and resolves the field values as necessary to the valid range. Reads return the last value written not the clipped values.

Processors may support a subset of IA32_HWP_REQUEST fields as indicated by CPUID. Reads of non-supported fields will return 0. Writes to non-supported fields are ignored.

The OS may override HWP's autonomous selection of performance state with a specific performance target by setting the Desired_Performance field to a non-zero value, however, the effective frequency delivered is subject to the result of energy efficiency and performance optimizations, which are influenced by the Energy Performance Preference field.

Software may disable all hardware optimizations by setting Minimum_Performance = Maximum_Performance (subject to package coordination).

Note: The processor may run below the Minimum_Performance level due to hardware constraints including: power, thermal, and package coordination constraints. The processor may also run below the Minimum_Performance level for short durations (few milliseconds) following C-state exit, and when Hardware Duty Cycling (see Section 15.5) is enabled.

When the IA32_HWP_REQUEST MSR is set to fast access mode, writes of this MSR are posted, i.e., the WRMSR instruction retires before the data reaches its destination within the processor. It may retire even before all preceding IA stores are globally visible, i.e., it is not an architecturally serializing instruction anymore (no store fence). A new CPUID bit indicates this new characteristic of the IA32_HWP_REQUEST MSR (see Section 15.4.8 for additional details).

15.4.4.2 IA32_HWP_REQUEST_PKG MSR (Address: 772H Package Scope)

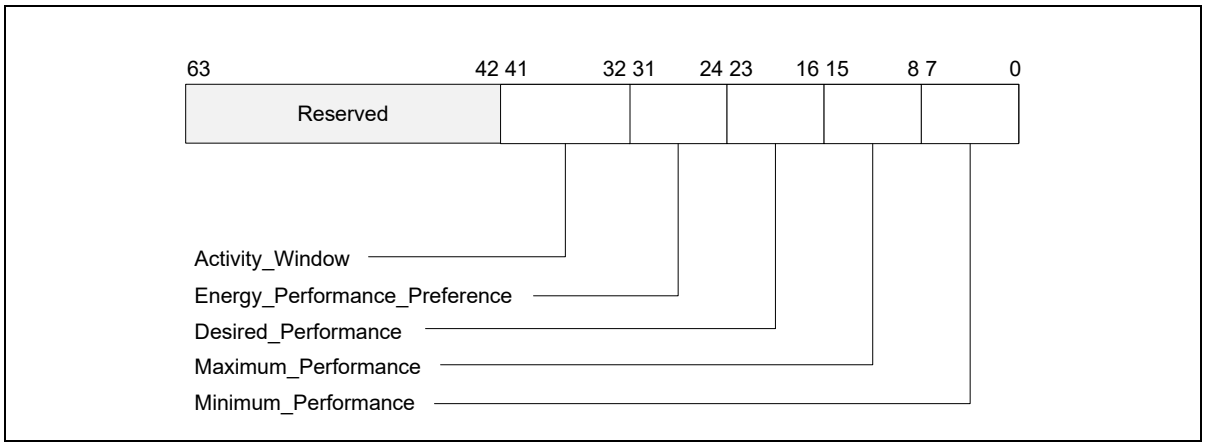

Figure 15-7. IA32_HWP_REQUEST_PKG Register

The structure of the IA32_HWP_REQUEST_PKG MSR (package-level) is identical to the IA32_HWP_REQUEST MSR with the exception of the the Package Control bit field and the five valid bit fields, which do not exist in the IA32_HWP_REQUEST_PKG MSR. Field values written to this MSR apply to all logical processors within the physical package with the exception of logical processors whose IA32_HWP_REQUEST.Package Control field is clear (zero). Single P-state Control mode is only supported when IA32_HWP_REQUEST_PKG is not supported.

15.4.4.3 IA32_HWP_PECI_REQUEST_INFO MSR (Address 775H Package Scope)

When an embedded system controller is integrated in the platform, it can override some of the OS HWP Request settings via the PECI mechanism. PECI initiated settings take precedence over the relevant fields in the IA32_HWP_REQUEST MSR and in the IA32_HWP_REQUEST_PKG MSR, irrespective of the Package Control bit or the Valid Bit values described above. PECI can independently control each of: Minimum Performance, Maximum Performance and EPP fields. This MSR contains both the PECI induced values and the control bits that indicate whether the embedded controller actually set the processor to use the respective value.

PECI override is supported if CPUID[6].EAX[16] is set.

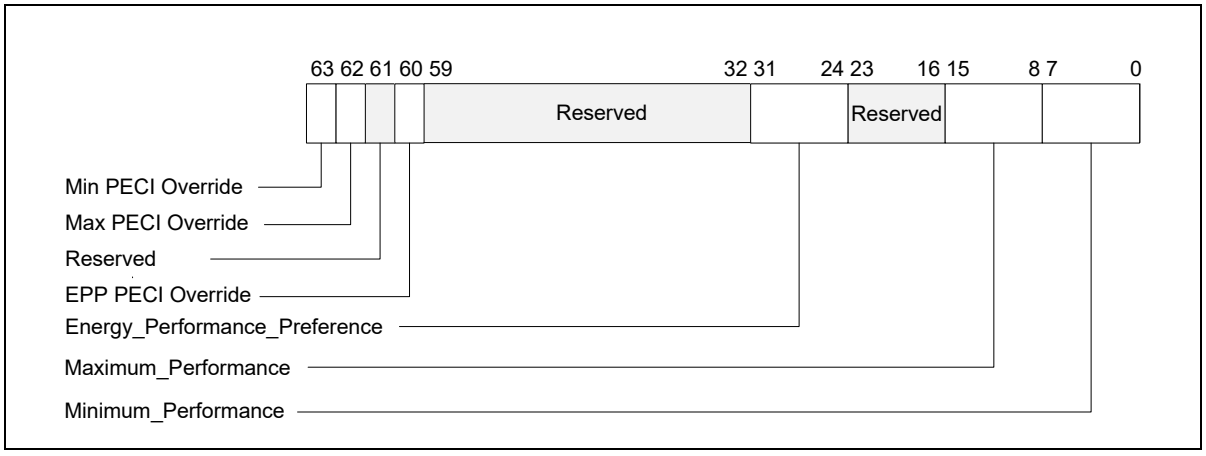

Figure 15-8. IA32_HWP_PECI_REQUEST_INFO MSR

The layout of the IA32_HWP_PECI_REQUEST_INFO MSR is shown in Figure 15-8. This MSR is writable by the embedded controller but is read-only by software executing on the CPU. This MSR has Package scope. The bit fields are described below:

- **Minimum_Performance (bits 7:0, RO)** — Used by the OS to read the latest value of PECI minimum performance input.
- **Maximum_Performance (bits 15:8, RO)** — Used by the OS to read the latest value of PECI maximum performance input.
- Bits 23:16 are reserved and must be zero.
- **Energy_Performance_Preference (bits 31:24, RO)** — Used by the OS to read the latest value of PECI energy performance preference input.
- Bits 59:32 are reserved and must be zero.
- **EPP_PECI_Override (bit 60, RO)** — Indicates whether PECI if currently overriding the Energy Performance Preference input. If set(1), PECI is overriding the Energy Performance Preference input. If clear(0), OS has control over Energy Performance Preference input.
- Bit 61 is reserved and must be zero.
- **Max_PECI_Override (bit 62, RO)** — Indicates whether PECI if currently overriding the Maximum Performance input. If set(1), PECI is overriding the Maximum Performance input. If clear(0), OS has control over Maximum Performance input.
- **Min_PECI_Override (bit 63, RO)** — Indicates whether PECI if currently overriding the Minimum Performance input. If set(1), PECI is overriding the Minimum Performance input. If clear(0), OS has control over Minimum Performance input.

HWP Request Field Hierarchical Resolution

HWP Request field resolution is fed by three MSRs: IA32_HWP_REQUEST, IA32_HWP_REQUEST_PKG, and IA32_HWP_PECI_REQUEST_INFO. The flow that the processor goes through to resolve which field value is chosen is shown below.

For each of the two HWP Request fields; Desired and Activity Window:

    If IA32_HWP_REQUEST.PACKAGE_CONTROL = 1 and IA32_HWP_REQUEST.<field> valid bit = 0
        Resolved Field Value = IA32_HWP_REQUEST_PKG.<field>
    Else
        Resolved Field Value = IA32_HWP_REQUEST.<field>

For each of the three HWP Request fields; Min, Max, and EPP:

    If IA32_HWP_PECI_REQUEST_INFO.<field> PECI Override bit = 1
        Resolved Field Value = IA32_HWP_PECI_REQUEST_INFO.<field>
    Else if IA32_HWP_REQUEST.PACKAGE_CONTROL = 1 and IA32_HWP_REQUEST.<field> valid bit = 0
        Resolved Field Value = IA32_HWP_REQUEST_PKG.<field>
    Else
        Resolved Field Value = IA32_HWP_REQUEST.<field>

15.4.4.4 IA32_HWP_CTL MSR (Address: 776H Logical Processor Scope)

IA32_HWP_CTL[0] controls the behavior of IA32_HWP_REQUEST Package Control [bit 42]. This control bit allows the IA32_HWP_REQUEST MSR to stay in INIT mode most of the time (Control Bit is equal to its RESET value of 0) thus avoiding actual saving/restoring of the MSR contents when the OS adds it to the register set saved and restored by XSAVES/XRSTORS.

- When IA32_HWP_CTL[0] = 0:
  - If IA32_HWP_REQUEST[42] = 0, the processor ignores all fields of the IA32_HWP_REQUEST_PKG MSR and selects all HWP values (Min, Max, EPP, Desired, Activity Window) from the IA32_HWP_REQUEST MSR.
  - If IA32_HWP_REQUEST[42] = 1, the processor selects the HWP values (Min, Max, EPP, Desired, Activity Window) either from the IA32_HWP_REQUEST MSR or from the IA32_HWP_REQUEST_PKG MSR according

to the values contained in the IA32_HWP_REQUEST MSR bit fields [bits 63:59]. See Section 15.4.4.1 for additional details.

- When IA32_HWP_CTL[0] = 1, the behavior is reversed:
  - If IA32_HWP_REQUEST[42] = 1, the processor ignores all fields of the IA32_HWP_REQUEST_PKG MSR and selects all HWP values (Min, Max, EPP, Desired, Activity Window) from the IA32_HWP_REQUEST MSR.
  - If IA32_HWP_REQUEST[42] = 0, the processor selects the HWP values (Min, Max, EPP, Desired, Activity Window) either from the IA32_HWP_REQUEST MSR or from the IA32_HWP_REQUEST_PKG MSR according to the values contained in the IA32_HWP_REQUEST MSR bit fields [bits 63:59]. See Section 15.4.4.1 for additional details.

Section 15-2 summarizes the IA32_HWP_CTL MSR bit 0 control behavior.

Table 15-2. IA32_HWP_CTL MSR Bit 0 Behavior

Field	Description		
Thread request PKG CTL meaning	Defines which HWP Request MSR is used, whether thread level or package level. When the package MSR is used, the thread MSR valid bits define which thread MSR fields override the package (default 0).		
	IA32_HWP_CTL[PKG_CTL_PLR]	**IA32_HWP_REQUEST[PKG_CTL]**	**HWP Request MSR Used**
	0	0	IA32_HWP_REQUEST MSR
	0	1	IA32_HWP_REQUEST_PKG MSR
	1	0	IA32_HWP_REQUEST_PKG MSR
	1	1	IA32_HWP_REQUEST MSR

This MSR is supported if CPUID[6].EAX[22] is set.

If the IA32_PM_ENABLE[HWP_ENABLE] (bit 0) is not set, access to this MSR will generate a #GP fault.

15.4.5 HWP Feedback

The processor provides several types of feedback to the OS during HWP operation.

The IA32_MPERF MSR and IA32_APERF MSR mechanism (see Section 15.2) allows the OS to calculate the resultant effective frequency delivered over a time period. Energy efficiency and performance optimizations directly impact the resultant effective frequency delivered.

The layout of the IA32_HWP_STATUS MSR is shown in Figure 15-9. It provides feedback regarding changes to IA32_HWP_CAPABILITIES.Guaranteed_Performance, IA32_HWP_CAPABILITIES.Highest_Performance, excursions to IA32_HWP_CAPABILITIES.Minimum_Performance, and PECI_Override entry/exit events. The bit fields are described below:

- **Guaranteed_Performance_Change (bit 0, RWC0)** — If set (1), a change to Guaranteed_Performance has occurred. Software should query IA32_HWP_CAPABILITIES.Guaranteed_Performance value to ascertain the new Guaranteed Performance value and to assess whether to re-adjust HWP hints via IA32_HWP_REQUEST. Software must clear this bit by writing a zero (0).
- Bit 1 is reserved and must be zero.
- **Excursion_To_Minimum (bit 2, RWC0)** — If set (1), an excursion to Minimum_Performance of IA32_HWP_REQUEST has occurred. Software must clear this bit by writing a zero (0).
- **Highest_Change (bit 3, RWC0)** — If set (1), a change to Highest Performance has occurred. Software should query IA32_HWP_CAPABILITIES to ascertain the new Highest Performance value. Software must clear this bit by writing a zero (0). Interrupts upon Highest Performance change are supported if CPUID[6].EAX[15] is set.
- **PECI_Override_Entry (bit 4, RWC0)** — If set (1), an embedded/management controller has started a PECI override of one or more OS control hints (Min, Max, EPP) specified in IA32_HWP_REQUEST or IA32_HWP_REQUEST_PKG. Software may query IA32_HWP_PECI_REQUEST_INFO MSR to ascertain which fields are now overridden via the PECI mechanism and what their values are (see Section 15.4.4.3 for

additional details). Software must clear this bit by writing a zero (0). Interrupts upon PECI override entry are supported if CPUID[6].EAX[16] is set.

- **PECI_Override_Exit (bit 5, RWC0)** — If set (1), an embedded/management controller has stopped overriding one or more OS control hints (Min, Max, EPP) specified in IA32_HWP_REQUEST or IA32_HWP_REQUEST_PKG. Software may query IA32_HWP_PECI_REQUEST_INFO MSR to ascertain which fields are still overridden via the PECI mechanism and which fields are now back under software control (see Section 15.4.4.3 for additional details). Software must clear this bit by writing a zero (0). Interrupts upon PECI override exit are supported if CPUID[6].EAX[16] is set.
- Bits 63:6 are reserved and must be zero.

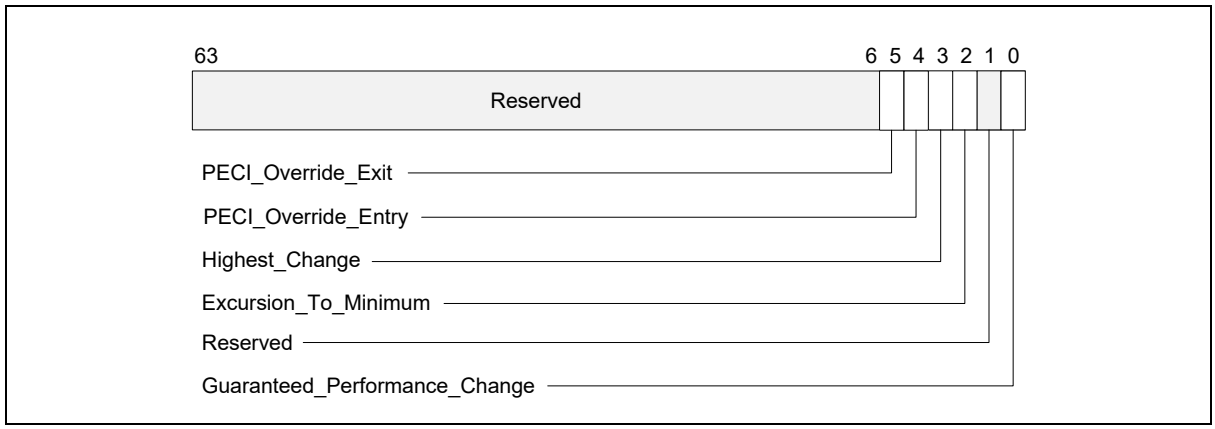

Figure 15-9. IA32_HWP_STATUS MSR

The status bits of IA32_HWP_STATUS must be cleared (0) by software so that a new status condition change will cause the hardware to set the bit again and issue the notification. Status bits are not set for "normal" excursions, e.g., running below Minimum Performance for short durations during C-state exit. Changes to Guaranteed_Performance, Highest_Performance, excursions to Minimum_Performance, or PECI_Override entry/exit will occur no more than once per second.

The OS can determine the specific reasons for a Guaranteed_Performance change or an excursion to Minimum_Performance in IA32_HWP_REQUEST by examining the associated status and log bits reported in the IA32_THERM_STATUS MSR. The layout of the IA32_HWP_STATUS MSR that HWP uses to support software query of HWP feedback is shown in Figure 15-10. The bit fields of IA32_THERM_STATUS associated with HWP feedback are described below (Bit fields of IA32_THERM_STATUS unrelated to HWP can be found in Section 15.8.5.2).

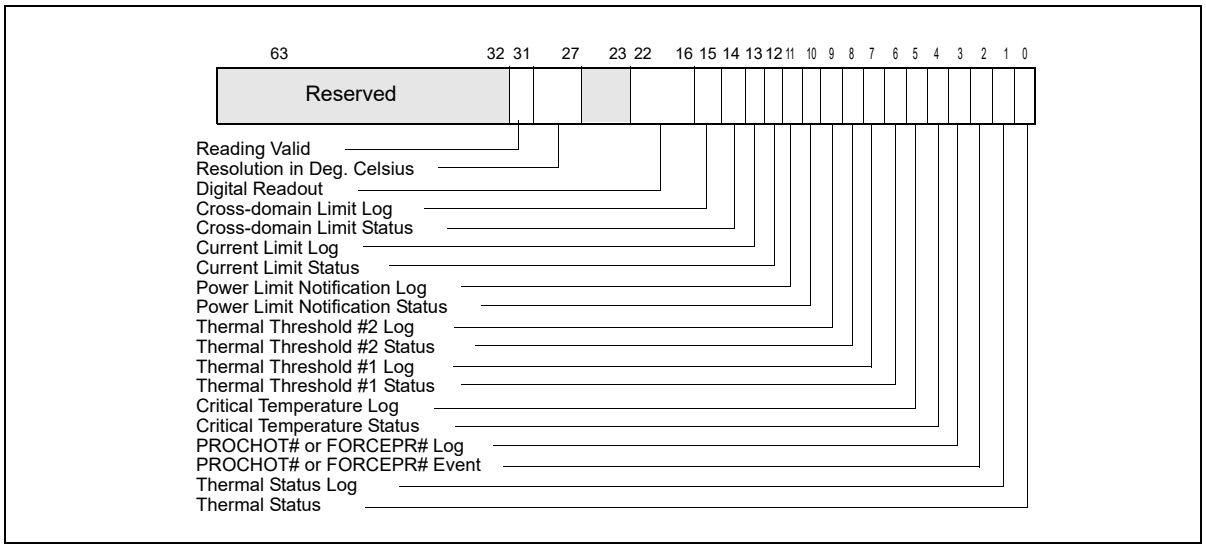

Figure 15-10. IA32_THERM_STATUS Register With HWP Feedback

- Bits 11:0, See Section 15.8.5.2.
- **Current Limit Status (bit 12, RO)** — If set (1), indicates an electrical current limit (e.g., Electrical Design Point/IccMax) is being exceeded and is adversely impacting energy efficiency optimizations.
- **Current Limit Log (bit 13, RWC0)** — If set (1), an electrical current limit has been exceeded that has adversely impacted energy efficiency optimizations since the last clearing of this bit or a reset. This bit is sticky, software may clear this bit by writing a zero (0).
- **Cross-domain Limit Status (bit 14, RO)** — If set (1), indicates another hardware domain (e.g., processor graphics) is currently limiting energy efficiency optimizations in the processor core domain.
- **Cross-domain Limit Log (bit 15, RWC0)** — If set (1), indicates another hardware domain (e.g., processor graphics) has limited energy efficiency optimizations in the processor core domain since the last clearing of this bit or a reset. This bit is sticky, software may clear this bit by writing a zero (0).
- Bits 63:16, See Section 15.8.5.2.

15.4.5.1 Non-Architectural HWP Feedback

The Productive Performance (MSR_PPERF) MSR (non-architectural) provides hardware's view of workload scalability, which is a rough assessment of the relationship between frequency and workload performance, to software. The layout of the MSR_PPERF is shown in Figure 15-11.

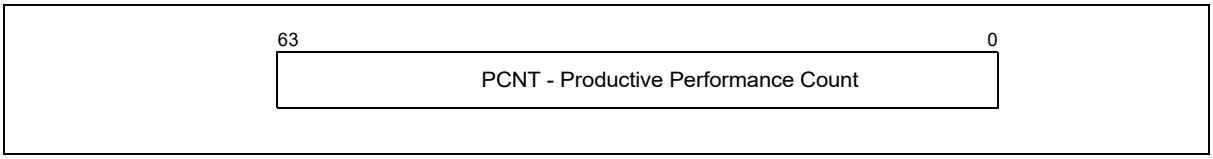

Figure 15-11. MSR_PPERF MSR

- **PCNT (bits 63:0, RO)** — Similar to IA32_APERF but only counts cycles perceived by hardware as contributing to instruction execution (e.g., unhalted and unstalled cycles). This counter increments at the same rate as IA32_APERF, where the ratio of (ΔPCNT/ΔACNT) is an indicator of workload scalability (0% to 100%). Note that values in this register are valid even when HWP is not enabled.

15.4.6 HWP Notifications

Processors may support interrupt-based notification of changes to HWP status as indicated by CPUID. If supported, the IA32_HWP_INTERRUPT MSR is used to enable interrupt-based notifications. Notification events, when enabled, are delivered using the existing thermal LVT entry. The layout of the IA32_HWP_INTERRUPT is shown in Figure 15-12. The bit fields are described below:

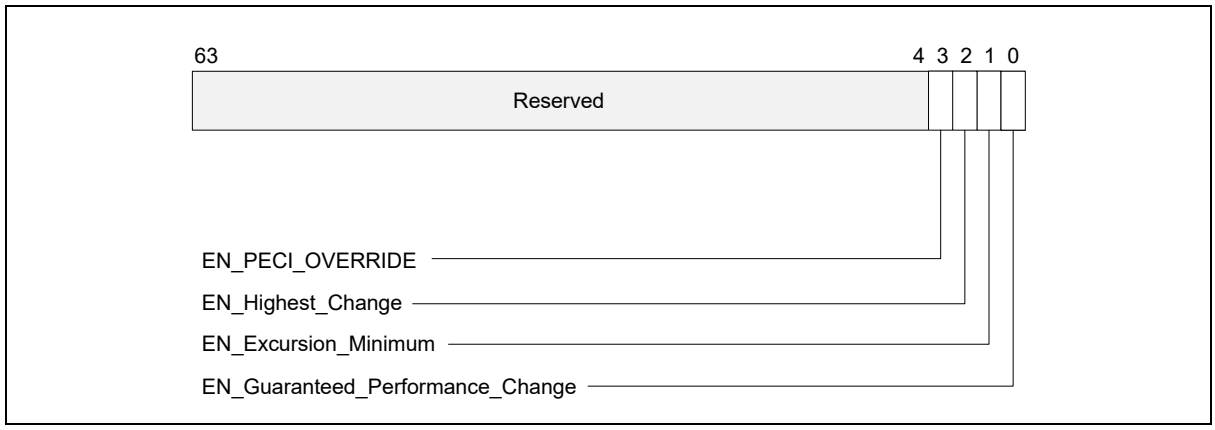

Figure 15-12. IA32_HWP_INTERRUPT MSR

- **EN_Guaranteed_Performance_Change (bit 0, RW)** — When set (1), an HWP Interrupt will be generated whenever a change to the IA32_HWP_CAPABILITIES.Guaranteed_Performance occurs. The default value is 0 (Interrupt generation is disabled).
- **EN_Excursion_Minimum (bit 1, RW)** — When set (1), an HWP Interrupt will be generated whenever the HWP hardware is unable to meet the IA32_HWP_REQUEST.Minimum_Performance setting. The default value is 0 (Interrupt generation is disabled).
- **EN_Highest_Change (bit 2, RW)** — When set (1), an HWP Interrupt will be generated whenever a change to the IA32_HWP_CAPABILITIES.Highest_Performance occurs. The default value is 0 (interrupt generation is disabled). Interrupts upon Highest Performance change are supported if CPUID[6].EAX[15] is set.
- **EN_PECI_OVERRIDE (bit 3, RW)** — When set (1), an HWP Interrupt will be generated whenever PECI starts or stops overriding any of the three HWP fields described in Section 15.4.4.3. The default value is 0 (interrupt generation is disabled). See Section 15.4.5 and Section 15.4.4.3 for details on how the OS learns what is the current set of HWP fields that are overridden by PECI. Interrupts upon PECI override change are supported if CPUID[6].EAX[16] is set.
- Bits 63:4 are reserved and must be zero.

15.4.7 Idle Logical Processor Impact on Core Frequency

Intel processors use one of two schemes for setting core frequency:

1. All cores share same frequency.
2. Each physical core is set to a frequency of its own.

In both cases the two logical processors that share a single physical core are set to the same frequency, so the processor accounts for the IA32_HWP_REQUEST MSR fields of both logical processors when defining the core frequency or the whole package frequency.

When **CPUID[6].EAX[20]** is set and only one logical processor of the two is active, while the other is idle (in any **C1 sub-state** or in a deeper sleep state), only the **active logical processor's** IA32_HWP_REQUEST MSR fields are considered, i.e., the HWP Request fields of a logical processor in the C1E sub-state or in a deeper sleep state are ignored.

Note: when a logical processor is in **C1 state** its HWP Request fields are accounted for.

15.4.8 Fast Write of Uncore MSR (Model Specific Feature)

There are a few logical processor scope MSRs whose values need to be observed outside the logical processor. The WRMSR instruction takes over 1000 cycles to complete (retire) for those MSRs. This overhead forces operating systems to avoid writing them too often whereas in many cases it is preferable that the OS writes them quite frequently for optimal power/performance operation of the processor.

The model specific "Fast Write MSR" feature reduces this overhead by an order of magnitude to a level of 100 cycles for a selected subset of MSRs.

Note: Writes to Fast Write MSRs are posted, i.e., when the WRMSR instruction completes, the data may still be "in transit" within the processor. Software can check the status by querying the processor to ensure data is already visible outside the logical processor (see Section 15.4.8.3 for additional details). Once the data is visible outside the logical processor, software is ensured that later writes by the same logical processor to the same MSR will be visible later (will not bypass the earlier writes).

MSRs that are selected for Fast Write are specified in a special capability MSR (see Section 15.4.8.1). Architectural MSRs that existed prior to the introduction of this feature and are selected for Fast Write, thus turning from slow to fast write MSRs, will be noted as such via a new CPUID bit. New MSRs that are fast upon introduction will be documented as such without an additional CPUID bit.

Three model specific MSRs are associated with the feature itself. They enable enumerating, controlling, and monitoring it. All three are logical processor scope.

15.4.8.1 FAST_UNCORE_MSRS_CAPABILITY (Address: 0x65F, Logical Processor Scope)

Operating systems or BIOS can read the FAST_UNCORE_MSRS_CAPABILITY MSR to enumerate those MSRs that are Fast Write MSRs.

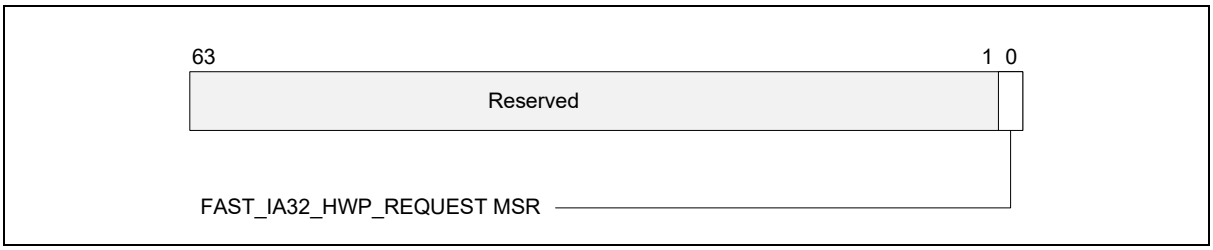

Figure 15-13. FAST_UNCORE_MSRS_CAPABILITY MSR

- **FAST_IA32_HWP_REQUEST MSR (bit 0, RO)** — When set (1), indicates that the IA32_HWP_REQUEST MSR is supported as a Fast Write MSR. A value of 0 indicates the IA32_HWP_REQUEST MSR is not supported as a Fast Write MSR.
- Bits 63:1 are reserved and must be zero.

15.4.8.2 FAST_UNCORE_MSRS_CTL (Address: 0x657, Logical Processor Scope)

Operating Systems or BIOS can use the FAST_UNCORE_MSRS_CTL MSR to opt-in or opt-out for fast write of specific MSRs that are enabled for Fast Write by the processor.

Note: Not all MSRs that are selected for this feature will necessarily have this opt-in/opt-out option. They may be supported in fast write mode only.

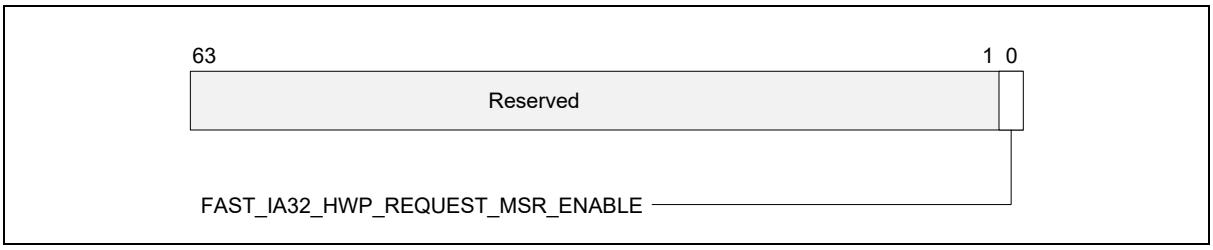

Figure 15-14. FAST_UNCORE_MSRS_CTL MSR

- **FAST_IA32_HWP_REQUEST_MSR_ENABLE (bit 0, RW)** — When set (1), enables fast access mode for the IA32_HWP_REQUEST MSR and sets the low latency, posted IA32_HWP_REQUESRT MSR' CPUID[6].EAX[18]. The default value is 0. Note that this bit can only be enabled once from the default value. Once set, writes to this bit are ignored. Only RESET will clear this bit.
- Bits 63:1 are reserved and must be zero.

15.4.8.3 FAST_UNCORE_MSRS_STATUS (Address: 0x65E, Logical Processor Scope)

Software that executes the WRMSR instruction of a Fast Write MSR can check whether the data is already visible outside the logical processor by reading the FAST_UNCORE_MSRS_STATUS MSR. For each Fast Write MSR there is a status bit that indicates whether the data is already visible outside the logical processor or is still in “transit”.

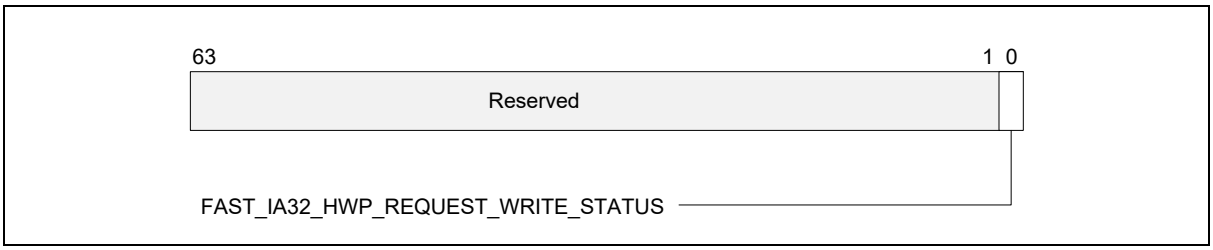

Figure 15-15. FAST_UNCORE_MSRS_STATUS MSR

- **FAST_IA32_HWP_REQUEST_WRITE_STATUS (bit 0, RO)** — Indicates whether the CPU is still in the middle of writing IA32_HWP_REQUEST MSR, even after the WRMSR instruction has retired. A value of 1 indicates the last write of IA32_HWP_REQUEST is still ongoing. A value of 0 indicates the last write of IA32_HWP_REQUEST is visible outside the logical processor.
- Bits 63:1 are reserved and must be zero.

15.4.9 Fast_IA32_HWP_REQUEST CPUID

IA32_HWP_REQUEST is an architectural MSR that exists in processors whose CPUID[6].EAX[7] is set (HWP BASE is enabled). This MSR has logical processor scope, but after its contents are written the contents become visible outside the logical processor. When the FAST_IA32_HWP_REQUEST CPUID[6].EAX[18] bit is set, writes to the IA32_HWP_REQUEST MSR are visible outside the logical processor via the “Fast Write” feature described in Section 15.4.8.

15.4.10 Recommendations for OS use of HWP Controls

Common Cases of Using HWP

The default HWP control field values are expected to be suitable for many applications. The OS can enable autonomous HWP for these common cases by

- Setting IA32_HWP_REQUEST.Desired Performance = 0 (hardware autonomous selection determines the performance target). Set IA32_HWP_REQUEST.Activity Window = 0 (enable HW dynamic selection of window size).

To maximize HWP benefit for the common cases, the OS should set

- IA32_HWP_REQUEST.Minimum_Performance = IA32_HWP_CAPABILITIES.Lowest_Performance and
- IA32_HWP_REQUEST.Maximum_Performance = IA32_HWP_CAPABILITIES.Highest_Performance.

Setting IA32_HWP_REQUEST.Minimum_Performance = IA32_HWP_REQUEST.Maximum_Performance is functionally equivalent to using of the IA32_PERF_CTL interface and is therefore not recommended (bypassing HWP).

Calibrating HWP for Application-Specific HWP Optimization

In some applications, the OS may have Quality of Service requirements that may not be met by the default values. The OS can characterize HWP by:

- keeping IA32_HWP_REQUEST.Minimum_Performance = IA32_HWP_REQUEST.Maximum_Performance to prevent non-linearity in the characterization process,
- utilizing the range values enumerated from the IA32_HWP_CAPABILITIES MSR to program IA32_HWP_REQUEST while executing workloads of interest and observing the power and performance result.

The power and performance result of characterization is also influenced by the IA32_HWP_REQUEST.Energy Performance Preference field, which must also be characterized.

Characterization can be used to set IA32_HWP_REQUEST.Minimum_Performance to achieve the required QOS in terms of performance. If IA32_HWP_REQUEST.Minimum_Performance is set higher than IA32_HWP_CAPABILITIES.Guaranteed Performance then notification of excursions to Minimum Performance may be continuous.

If autonomous selection does not deliver the required workload performance, the OS should assess the current delivered effective frequency and for the duration of the specific performance requirement set IA32_HWP_REQUEST.Desired_Performance ≠ 0 and adjust IA32_HWP_REQUEST.Energy_Performance_Preference as necessary to achieve the required workload performance. The MSR_PPERF.PCNT value can be used to better comprehend the potential performance result from adjustments to IA32_HWP_REQUEST.Desired_Performance. The OS should set IA32_HWP_REQUEST.Desired_Performance = 0 to re-enable autonomous selection.

Tuning for Maximum Performance or Lowest Power Consumption

Maximum performance will be delivered by setting IA32_HWP_REQUEST.Minimum_Performance = IA32_HWP_REQUEST.Maximum_Performance = IA32_HWP_CAPABILITIES.Highest_Performance and setting IA32_HWP_REQUEST.Energy_Performance_Preference = 0 (performance preference).

Lowest power will be achieved by setting IA32_HWP_REQUEST.Minimum_Performance = IA32_HWP_REQUEST.Maximum_Performance = IA32_HWP_CAPABILITIES.Lowest_Performance and setting IA32_HWP_REQUEST.Energy_Performance_Preference = 0FFH (energy efficiency preference).

Mixing Logical Processor and Package Level HWP Field Settings

Using the IA32_HWP_REQUEST Package_Control bit and the five valid bits in that MSR, the OS can mix and match between selecting the Logical Processor scope fields and the Package level fields. For example, the OS can set all logical cores' IA32_HWP_REQUEST.Package_Control bit to '1', and for those logical processors if it prefers a different EPP value than the one set in the IA32_HWP_REQUEST_PKG MSR, the OS can set the desired EPP value and the EPP valid bit. This overrides the package EPP value for only a subset of the logical processors in the package.

Additional Guidelines

Set IA32_HWP_REQUEST.Energy_Performance_Preference as appropriate for the platform's current mode of operation. For example, a mobile platforms' setting may be towards performance preference when on AC power and more towards energy efficiency when on DC power.

The use of the Running Average Power Limit (RAPL) processor capability (see section 14.7.1) is highly recommended when HWP is enabled. Use of IA32_HWP_Request.Maximum_Performance for thermal control is subject to limitations and can adversely impact the performance of other processor components, e.g., graphics

If default values deliver undesirable performance latency in response to events, the OS should set IA32_HWP_REQUEST. Activity_Window to a low (non-zero) value and IA32_HWP_REQUEST.Energy_Performance_Preference towards performance (0) for the event duration.

Similarly, for "real-time" threads, set IA32_HWP_REQUEST.Energy_Performance_Preference towards performance (0) and IA32_HWP_REQUEST. Activity_Window to a low value, e.g., 01H, for the duration of their execution.

When executing low priority work that may otherwise cause the hardware to deliver high performance, set IA32_HWP_REQUEST. Activity_Window to a longer value and reduce the IA32_HWP_Request.Maximum_Performance value as appropriate to control energy efficiency. Adjustments to IA32_HWP_REQUEST.Energy_Performance_Preference may also be necessary.

15.5 HARDWARE DUTY CYCLING (HDC)

Intel processors may contain support for Hardware Duty Cycling (HDC), which enables the processor to autonomously force its components inside the physical package into idle state. For example, the processor may selectively force only the processor cores into an idle state.

HDC is disabled by default on processors that support it. System software can dynamically enable or disable HDC to force one or more components into an idle state or wake up those components previously forced into an idle state. Forced Idling (and waking up) of multiple components in a physical package can be done with one WRMSR to a packaged-scope MSR from any logical processor within the same package.

HDC does not delay events such as timer expiration, but it may affect the latency of short (less than 1 msec) software threads, e.g., if a thread is forced to idle state just before completion and entering a "natural idle".

HDC forced idle operation can be thought of as operating at a lower effective frequency. The effective average frequency computed by software will include the impact of HDC forced idle.

The primary use of HDC is enable system software to manage low active workloads to increase the package level C6 residency. Additionally, HDC can lower the effective average frequency in case or power or thermal limitation.

When HDC forces a logical processor, a processor core or a physical package to enter an idle state, its C-State is set to C3 or deeper. The deep "C-states" referred to in this section are processor-specific C-states.

15.5.1 Hardware Duty Cycling Programming Interfaces

The programming interfaces provided by HDC include the following:

- The CPUID instruction allows software to discover the presence of HDC support in an Intel processor. Specifically, execute CPUID instruction with EAX=06H as input, bit 13 of EAX indicates the processor's support of the following aspects of HDC.
  - — Availability of HDC baseline resource, CPUID.06H:EAX[bit 13]: If this bit is set, HDC provides the following architectural MSRs: IA32_PKG_HDC_CTL, IA32_PM_CTL1, and the IA32_THREAD_STALL MSRs.

- Additionally, HDC may provide several non-architectural MSR.

Table 15-3. Architectural and non-Architecture MSRs Related to HDC

Address	Architectural	Register Name	Description
DB0H	Y	IA32_PKG_HDC_CTL	Package Enable/Disable HDC.
DB1H	Y	IA32_PM_CTL1	Per-logical-processor select control to allow/block HDC forced idling.
DB2H	Y	IA32_THREAD_STALL	Accumulate stalled cycles on this logical processor due to HDC forced idling.
653H	N	MSR_CORE_HDC_RESIDENCY	Core level stalled cycle counter due to HDC forced idling on one or more logical processor.
655H	N	MSR_PKG_HDC_SHALLOW_RESIDENCY	Accumulate the cycles the package was in C2[1] state and at least one logical processor was in forced idle
656H	N	MSR_PKG_HDC_DEEP_RESIDENCY	Accumulate the cycles the package was in the software specified Cx[1] state and at least one logical processor was in forced idle. Cx is specified in MSR_PKG_HDC_CONFIG_CTL.
652H	N	MSR_PKG_HDC_CONFIG_CTL	HDC configuration controls

NOTES:

1. The package "C-states" referred to in this section are processor-specific C-states.

15.5.2 Package level Enabling HDC

The layout of the IA32_PKG_HDC_CTL MSR is shown in Figure 15-16. IA32_PKG_HDC_CTL is a writable MSR from any logical processor in a package. The bit fields are described below:

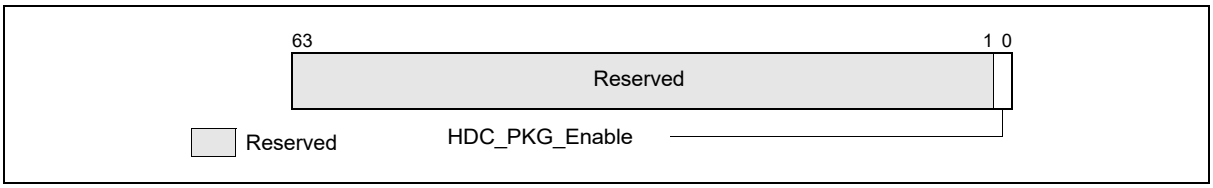

Figure 15-16. IA32_PKG_HDC_CTL MSR

- **HDC_PKG_Enable (bit 0, R/W)** — Software sets this bit to enable HDC operation by allowing the processor to force to idle all "HDC-allowed" (see Figure 15.5.3) logical processors in the package. Clearing this bit disables HDC operation in the package by waking up all the processor cores that were forced into idle by a previous '0'-to-'1' transition in IA32_PKG_HDC_CTL.HDC_PKG_Enable. This bit is writable only if CPUID.06H:EAX[bit 13] = 1. Default = zero (0).
- Bits 63:1 are reserved and must be zero.

After processor support is determined via CPUID, system software can enable HDC operation by setting IA32_PKG_HDC_CTL.HDC_PKG_Enable to 1. At reset, IA32_PKG_HDC_CTL.HDC_PKG_Enable is cleared to 0. A '0'-to-'1' transition in HDC_PKG_Enable allows the processor to force to idle all HDC-allowed (indicated by the non-zero state of IA32_PM_CTL1[bit 0]) logical processors in the package. A '1'-to-'0' transition wakes up those HDC force-idled logical processors.

Software can enable or disable HDC using this package level control multiple times from any logical processor in the package. Note the latency of writing a value to the package-visible IA32_PKG_HDC_CTL.HDC_PKG_Enable is longer than the latency of a WRMSR operation to a Logical Processor MSR (as opposed to package level MSR) such as: IA32_PM_CTL1 (described in Section 15.5.3). Propagation of the change in IA32_PKG_HDC_CTL.HDC_PKG_Enable and reaching all HDC idled logical processor to be woken up may take on the order of core C6 exit latency.

15.5.3 Logical-Processor Level HDC Control

The layout of the IA32_PM_CTL1 MSR is shown in Figure 15-17. Each logical processor in a package has its own IA32_PM_CTL1 MSR. The bit fields are described below:

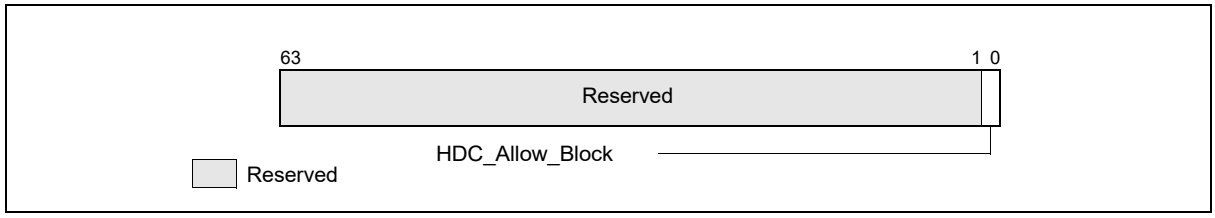

Figure 15-17. IA32_PM_CTL1 MSR

- **HDC_Allow_Block (bit 0, R/W)** — Software sets this bit to allow this logical processors to honor the package-level IA32_PKG_HDC_CTL.HDC_PKG_Enable control. Clearing this bit prevents this logical processor from using the HDC. This bit is writable only if CPUID.06H:EAX[bit 13] = 1. Default = one (1).
- Bits 63:1 are reserved and must be zero.

Fine-grain OS control of HDC operation at the granularity of per-logical-processor is provided by IA32_PM_CTL1. At RESET, all logical processors are allowed to participate in HDC operation such that OS can manage HDC using the package-level IA32_PKG_HDC_CTL.

Writes to IA32_PM_CTL1 complete with the latency that is typical to WRMSR to a Logical Processor level MSR. When the OS chooses to manage HDC operation at per-logical-processor granularity, it can write to IA32_PM_CTL1 on one or more logical processors as desired. Each write to IA32_PM_CTL1 must be done by code that executes on the logical processor targeted to be allowed into or blocked from HDC operation.

Blocking one logical processor for HDC operation may have package level impact. For example, the processor may decide to stop duty cycling of all other Logical Processors as well.

The propagation of IA32_PKG_HDC_CTL.HDC_PKG_Enable in a package takes longer than a WRMSR to IA32_PM_CTL1. The last completed write to IA32_PM_CTL1 on a logical processor will be honored when a '0'-to-'1' transition of IA32_PKG_HDC_CTL.HDC_PKG_Enable arrives to a logical processor.

15.5.4 HDC Residency Counters

There is a collection of counters available for software to track various residency metrics related to HDC operation. In general, HDC residency time is defined as the time in HDC forced idle state at the granularity of per-logical-processor, per-core, or package. At the granularity of per-core/package-level HDC residency, at least one of the logical processor in a core/package must be in the HDC forced idle state.

15.5.4.1 IA32_THREAD_STALL

Software can track per-logical-processor HDC residency using the architectural MSR IA32_THREAD_STALL.The layout of the IA32_THREAD_STALL MSR is shown in Figure 15-18. Each logical processor in a package has its own IA32_THREAD_STALL MSR. The bit fields are described below:

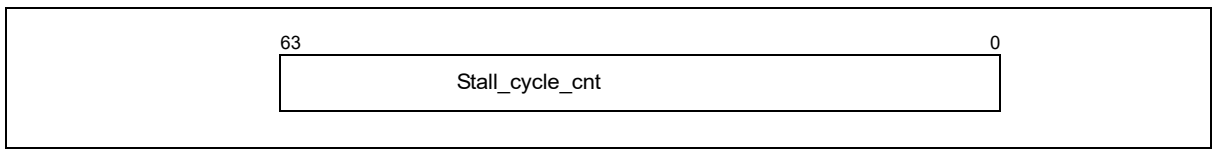

Figure 15-18. IA32_THREAD_STALL MSR

- **Stall_Cycle_Cnt (bits 63:0, R/O)** — Stores accumulated HDC forced-idle cycle count of this processor core since last RESET. This counter increments at the same rate of the TSC. The count is updated only after the logical processor exits from the forced idled C-state. At each update, the number of cycles that the logical processor was stalled due to forced-idle will be added to the counter. This counter is available only if CPUID.06H:EAX[bit 13] = 1. Default = zero (0).

A value of zero in IA32_THREAD_STALL indicates either HDC is not supported or the logical processor never serviced any forced HDC idle. A non-zero value in IA32_THREAD_STALL indicates the HDC forced-idle residency times of the logical processor. It also indicates the forced-idle cycles due to HDC that could appear as C0 time to traditional OS accounting mechanisms (e.g., time-stamping OS idle/exit events).

Software can read IA32_THREAD_STALL irrespective of the state of IA32_PKG_HDC_CTL and IA32_PM_CTL1, as long as CPUID.06H:EAX[bit 13] = 1.

15.5.4.2 Non-Architectural HDC Residency Counters

Processors that support HDC operation may provide the following model-specific HDC residency counters.

MSR_CORE_HDC_RESIDENCY

Software can track per-core HDC residency using the counter MSR_CORE_HDC_RESIDENCY. This counter increments when the core is in C3 state or deeper (all logical processors in this core are idle due to either HDC or other mechanisms) and at least one of the logical processors is in HDC forced idle state. The layout of the MSR_CORE_HDC_RESIDENCY is shown in Figure 15-19. Each processor core in a package has its own MSR_CORE_HDC_RESIDENCY MSR. The bit fields are described below:

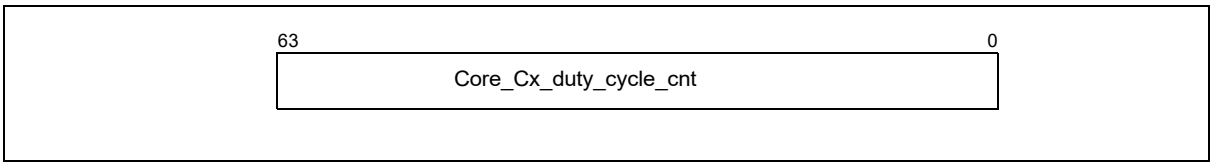

Figure 15-19. MSR_CORE_HDC_RESIDENCY MSR

- **Core_Cx_Duty_Cycle_Cnt (bits 63:0, R/O)** — Stores accumulated HDC forced-idle cycle count of this processor core since last RESET. This counter increments at the same rate of the TSC. The count is updated only after core C-state exit from a forced idled C-state. At each update, the increment counts cycles when the core is in a Cx state (all its logical processor are idle) and at least one logical processor in this core was forced into idle state due to HDC. If CPUID.06H:EAX[bit 13] = 0, attempt to access this MSR will cause a #GP fault. Default = zero (0).

A value of zero in MSR_CORE_HDC_RESIDENCY indicates either HDC is not supported or this processor core never serviced any forced HDC idle.

MSR_PKG_HDC_SHALLOW_RESIDENCY

The counter MSR_PKG_HDC_SHALLOW_RESIDENCY allows software to track HDC residency time when the package is in C2 state, all processor cores in the package are not active and at least one logical processor was forced into idle state due to HDC. The layout of the MSR_PKG_HDC_SHALLOW_RESIDENCY is shown in Figure 15-20. There is one MSR_PKG_HDC_SHALLOW_RESIDENCY per package. The bit fields are described below:

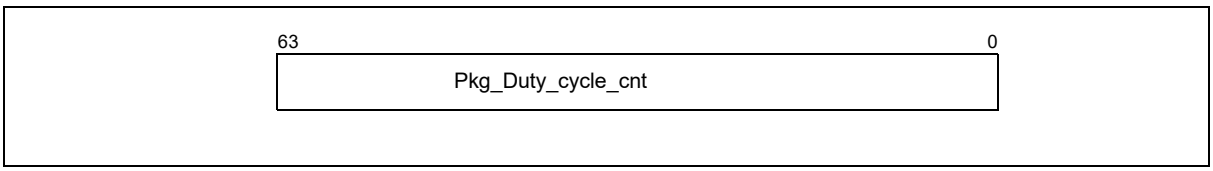

Figure 15-20. MSR_PKG_HDC_SHALLOW_RESIDENCY MSR

- **Pkg_Duty_Cycle_Cnt (bits 63:0, R/O)** — Stores accumulated HDC forced-idle cycle count of this processor core since last RESET. This counter increments at the same rate of the TSC. Package shallow residency may be implementation specific. In the initial implementation, the threshold is package C2-state. The count is updated only after package C2-state exit from a forced idled C-state. At each update, the increment counts cycles when the package is in C2 state and at least one processor core in this package was forced into idle state due to HDC. If CPUID.06H:EAX[bit 13] = 0, attempt to access this MSR may cause a #GP fault. Default = zero (0).

A value of zero in MSR_PKG_HDC_SHALLOW_RESIDENCY indicates either HDC is not supported or this processor package never serviced any forced HDC idle.

MSR_PKG_HDC_DEEP_RESIDENCY

The counter MSR_PKG_HDC_DEEP_RESIDENCY allows software to track HDC residency time when the package is in a software-specified package Cx state, all processor cores in the package are not active and at least one logical processor was forced into idle state due to HDC. Selection of a specific package Cx state can be configured using MSR_PKG_HDC_CONFIG. The layout of the MSR_PKG_HDC_DEEP_RESIDENCY is shown in Figure 15-21. There is one MSR_PKG_HDC_DEEP_RESIDENCY per package. The bit fields are described below:

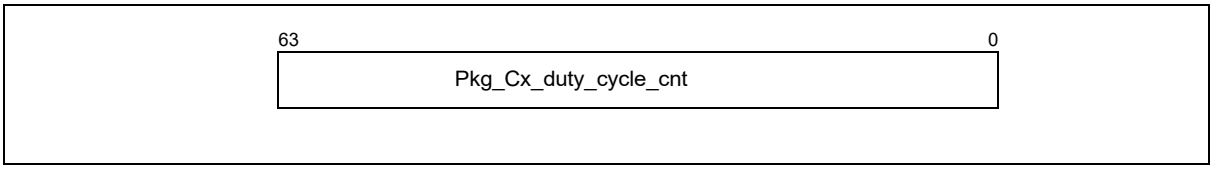

Figure 15-21. MSR_PKG_HDC_DEEP_RESIDENCY MSR

- **Pkg_Cx_Duty_Cycle_Cnt (bits 63:0, R/O)** — Stores accumulated HDC forced-idle cycle count of this processor core since last RESET. This counter increments at the same rate of the TSC. The count is updated only after package C-state exit from a forced idle state. At each update, the increment counts cycles when the package is in the software-configured Cx state and at least one processor core in this package was forced into idle state due to HDC. If CPUID.06H:EAX[bit 13] = 0, attempt to access this MSR may cause a #GP fault. Default = zero (0).

A value of zero in MSR_PKG_HDC_SHALLOW_RESIDENCY indicates either HDC is not supported or this processor package never serviced any forced HDC idle.

MSR_PKG_HDC_CONFIG

MSR_PKG_HDC_CONFIG allows software to configure the package Cx state that the counter MSR_PKG_HDC_DEEP_RESIDENCY monitors. The layout of the MSR_PKG_HDC_CONFIG is shown in Figure 15-22. There is one MSR_PKG_HDC_CONFIG per package. The bit fields are described below:

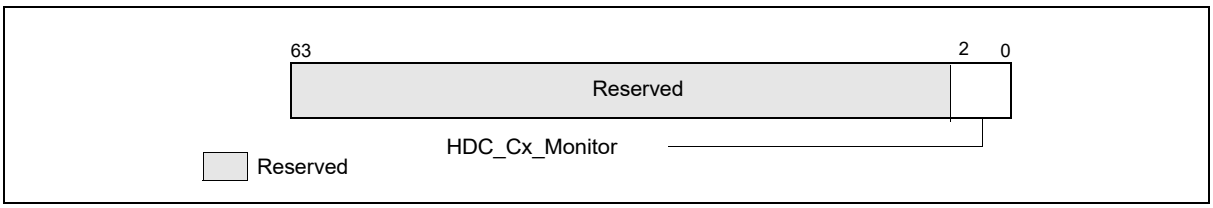

Figure 15-22. MSR_PKG_HDC_CONFIG MSR

- **Pkg_Cx_Monitor (bits 2:0, R/W)** — Selects which package C-state the MSR_HDC_DEEP_RESIDENCY counter will monitor. The encoding of the HDC_Cx_Monitor field are: **0**: no-counting; **1**: count package C2 only, **2**: count package C3 and deeper; **3**: count package C6 and deeper; **4**: count package C7 and deeper; other encodings are reserved. If CPUID.06H:EAX[bit 13] = 0, attempt to access this MSR may cause a #GP fault. Default = zero (0).
- Bits 63:3 are reserved and must be zero.

15.5.5 MPERF and APERF Counters Under HDC

HDC operation can be thought of as an average effective frequency drop due to all or some of the Logical Processors enter an idle state period.

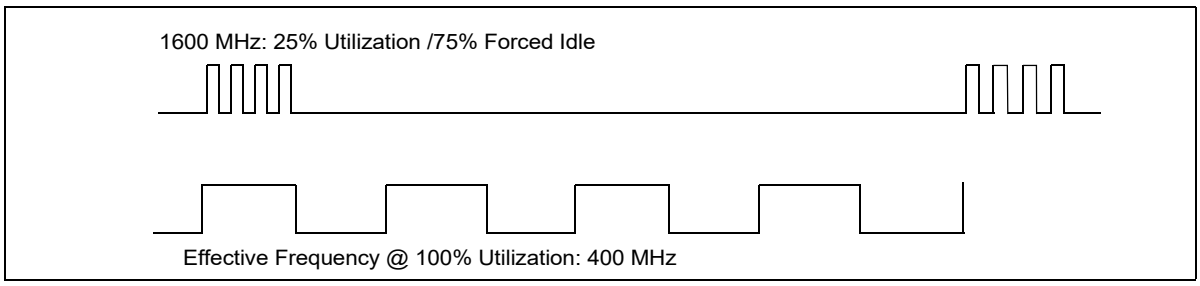

Figure 15-23. Example of Effective Frequency Reduction and Forced Idle Period of HDC

By default, the IA32_MPERF counter counts during forced idle periods as if the logical processor was active. The IA32_APERF counter does not count during forced idle state. This counting convention allows the OS to compute the average effective frequency of the Logical Processor between the last MWAIT exit and the next MWAIT entry (OS visible C0) by ΔACNT/ΔMCNT * TSC Frequency.

15.6 HARDWARE FEEDBACK INTERFACE AND INTEL® THREAD DIRECTOR

Intel processors that enumerate CPUID.06H.0H:EAX.HW_FEEDBACK[bit 19] as 1 support Hardware Feedback Interface (HFI). Hardware provides guidance to the Operating System (OS) scheduler to perform optimal workload scheduling through a hardware feedback interface structure in memory. Details on this table structure are described in Section 15.6.1.

Intel processors that enumerate CPUID.06H.0H:EAX[bit 23] as 1 support Intel® Thread Director. Hardware provides guidance to the Operating System (OS) scheduler to perform optimal workload scheduling through a memory resident table and software thread specific index (Class ID) that points into that table and selects which data to use for that software thread. Details on this table structure are described in Section 15.6.2.

15.6.1 Hardware Feedback Interface Table Structure

This structure has a global header that is 16 bytes in size. Following this global header, there is one 8 byte entry per logical processor in the socket. The structure is designed as follows.

Table 15-4. Hardware Feedback Interface Structure

Byte Offset	Size (Bytes)	Description
0	16	Global Header
16	8	Per Logical Processor Entry
24	8	Per Logical Processor Entry
…	…	…
16 + n*8	8	Per Logical Processor Entry

The global header is structured as shown in Table 15-5.

Table 15-5. Hardware Feedback Interface Global Header Structure

Byte Offset	Size (Bytes)	Field Name	Description
0	8	Timestamp	Timestamp of when the table was last updated by hardware. This is a timestamp in crystal clock units. Initialized by the OS to 0.
8	1	Performance Capability Flags	If bit 0 is set to 1, indicates the performance capability field for one or more logical processors was updated in the table and/or another bit in this field is updated. If bit 1 is set to 1, indicates a force idle/inject idle request to the OS for one or more logical processors. Initialized by the OS to 0.
9	1	Energy Efficiency Capability Changed	If bit 0 is set to 1, indicates the energy efficiency capability field for one or more logical processors was updated in the table and/or another bit in this field is updated. If bit 1 is set to 1, indicates a force idle/inject idle request to the OS for one or more logical processors. Initialized by the OS to 0.
10	6	Reserved	Initialized by the OS to 0.

The per logical processor scheduler feedback entry is structured as follows. The operating system can determine the index of the logical processor feedback entry for a logical processor using CPUID.06H.0H:EDX[31:16] by executing CPUID on that logical processor.

Table 15-6. Hardware Feedback Interface Logical Processor Entry Structure

Byte Offset	Size (Bytes)	Field Name	Description
0	1	Performance Capability	Performance capability is an 8-bit value (0 ... 255) specifying the relative performance level of a logical processor. Higher values indicate higher performance; the lowest performance level of 0 indicates a recommendation to the OS to not schedule any software threads on it for performance reasons. The OS scheduler is expected to initialize the Hardware Feedback Interface Structure to 0 prior to enabling Hardware Feedback. CPUID.06H.0H:EDX[0] enumerates support for Performance capability reporting.
1	1	Energy Efficiency Capability	Energy Efficiency capability is an 8-bit value (0 ... 255) specifying the relative energy efficiency level of a logical processor. Higher values indicate higher energy efficiency; the lowest energy efficiency capability of 0 indicates a recommendation to the OS to not schedule any software threads on it for efficiency reasons. An Energy Efficiency capability of 255 indicates which logical processors have the highest relative energy efficiency capability. In addition, the value 255 is an explicit recommendation for the OS to consolidate work on those logical processors for energy efficiency reasons. The OS scheduler is expected to initialize the Hardware Feedback Interface Structure to 0 prior to enabling Hardware Feedback. CPUID.06H.0H:EDX[1] enumerates support for Energy Efficiency capability reporting.
2	6	Reserved	The OS scheduler is expected to initialize the Hardware Feedback Interface Structure to 0 prior to enabling Hardware Feedback.

15.6.2 Intel® Thread Director Table Structure

This structure has a global header that is at least 16 bytes in size. Its size depends on the number of classes and capabilities enumerated by the CPUID instruction (see notes below Table 15-7). Following this global header there are multiple Logical Processor related entries. The structure is designed as follows.

Table 15-7. Intel® Thread Director Table Structure

Byte Offset[1,2,3]	Size (Bytes)	Description
0	8 + CP^4*CL^4 + R8[5]	Global Header
8 + CP*CL + R8	CL*CP + R8	Per Logical Processor $Entry_0$[6]
8 + 2*(CP*CL + R8)	CL*CP + R8	Per Logical Processor $Entry_1$
…	…	…
8 + (N^7 -1)*(CP*CL + R8)	CL*CP +R8	Logical Processor $Entry_{N-1}$

NOTES:

1. Byte offset of $Capability_{cp}$ of $Class_{cl}$ change indication: 8 + CP * cl + cp.
2. Byte offset of LP $Entry_i$: 8 + (i+1) * (CP * CL + R8).
3. Byte offset of $capability_{cp}$ of $class_{cl}$ of LP $Entry_i$: 8 + (i+1) * (CP * CL + R8) + CP * cl + cp.
4. Both upper case CL and CP denote total number of classes and capabilities defined for the processor. Lower case cl and cp denote one instance of a class or capability. cl and cp are counted starting at zero. See "CPUID—CPU Identification" in Chapter 3 of the Intel® 64 and IA-32 Architectures Software Developer's Manual, Volume 2A for the number of classes (CL) and the number of supported capabilities (CP). CP (# of capabilities): number of enumerated bits in CPUID.06H.0H.EDX[7:0] and CL (# of classes): CPUID.06H.0H.ECX[15:8].
5. R8 is the number of bytes necessary to round up the Capability Change Indication array and the Logical Processor Entry to whole multiple of 8 bytes.
6. Table size: 8 + (N+1)* (CP * CL + R8).
7. N is the number of Logical Processor Entries in the table. It is not greater than the number of Logical Processors on the socket, but may be lower.
8. The Operating System can determine the index for the Logical Processor Entry within the Intel Thread Director table using CPUID.06H.0H:EDX[31:16] by executing the CPUID instruction on that Logical Processor.
9. The Operating System should allocate space to accommodate for one such structure per socket in the system.
10. The Intel Thread Director table structure extends the Hardware Feedback Interface table structure without breaking backward compatibility. The Hardware Feedback Interface can be viewed as having two capabilities and a single class.

The global header is structured as shown in Table 15-8.

Table 15-8. Intel® Thread Director Global Header Structure

Byte Offset	Size (Bytes)	Description	
0	8	Time-stamp of when the table was last updated by hardware. This is a time-stamp in crystal clock units. Initialized by the OS to 0.	
8	1	Class 0 Performance Capability Flags	If bit 0 is set to 1, indicates the performance capability field for one or more logical processors was updated in the table and/or another bit in this field is updated. If bit 1 is set to 1, indicates a force idle/inject idle request to the OS for one or more logical processors. Initialized by the OS to 0.
8 + 1	1	Class 0 Energy Efficiency Capability Flags	If bit 0 is set to 1, indicates the energy efficiency capability field for one or more logical processors was updated in the table and/or another bit in this field is updated. If bit 1 is set to 1, indicates a force idle/inject idle request to the OS for one or more logical processors. Initialized by the OS to 0.
...			
8 + CP - 1	1	Class 0 change indication for Capability #(CP-1) if exists	Unavailable for capabilities that are not enumerated.
8 + CP	1	Class 1 Performance Capability Flags	If bit 0 is set to 1, indicates the performance capability field for one or more logical processors was updated in the table and/or another bit in this field is updated. If bit 1 is set to 1, indicates a force idle/inject idle request to the OS for one or more logical processors. Initialized by the OS to 0.
8 + CP + 1	1	Class 1 Energy Efficiency Capability Flags	If bit 0 is set to 1, indicates the energy efficiency capability field for one or more logical processors was updated in the table and/or another bit in this field is updated. If bit 1 is set to 1, indicates a force idle/inject idle request to the OS for one or more logical processors. Initialized by the OS to 0.
...			
8 + 2*CP - 1	1	Class 1 change indication for Capability #(CP-1) if exists	Unavailable for capabilities that are not enumerated.
...			Change indication for Capabilities of additional Classes if exist.
8 + (CL-1)*CP	1	Class #(CL-1) Performance Capability Flags	If bit 0 is set to 1, indicates the performance capability field for one or more logical processors was updated in the table and/or another bit in this field is updated. If bit 1 is set to 1, indicates a force idle/inject idle request to the OS for one or more logical processors. Initialized by the OS to 0.
8 + (CL-1)*CP + 1	1	Class #(CL-1) Energy Efficiency Capability Flags	If bit 0 is set to 1, indicates the energy efficiency capability field for one or more logical processors was updated in the table and/or another bit in this field is updated. If bit 1 is set to 1, indicates a force idle/inject idle request to the OS for one or more logical processors. Initialized by the OS to 0.

Table 15-8. Intel® Thread Director Global Header Structure (Contd.)

Byte Offset	Size (Bytes)	Description	
…			
8 + CL*CP - 1	1	Class #(CL-1) change indication for Capability #(CP-1) if exists	Unavailable for capabilities that are not enumerated.
8 + CL*CP	R8	Padding	Padding to nearest multiple of 8 bytes. Initialized by the OS to 0 prior to enabling Intel Thread Director.

The logical processor capability entry in the Intel Thread Director table is structured as follows.

Table 15-9. Intel® Thread Director Logical Processor Entry Structure

Byte Offset	Size (Bytes)	Field Name	Description
0	1	Performance Capability	Class 0 Performance capability is an 8-bit value (0 … 255) specifying the relative performance level of a single logical processor. Higher values indicate higher performance; the lowest performance level of 0 indicates a recommendation to the OS to not schedule any software threads on it for performance reasons. Initialized by the OS to 0.
1	1	Energy Efficiency Capability	Class 0 Energy Efficiency capability is an 8-bit value (0 … 255) specifying the relative energy efficiency level of a logical processor. Higher values indicate higher energy efficiency; the lowest energy efficiency capability of 0 indicates a recommendation to the OS to not schedule any software threads on it for efficiency reasons. An Energy Efficiency capability of 255 indicates which logical processors have the highest relative energy efficiency capability. In addition, the value 255 is an explicit recommendation for the OS to consolidate work on those logical processors for energy efficiency reasons. Initialized by the OS to 0.
…			
CP - 1	1	Capability #(CP-1)	Class 0 Capability #(CP-1) if exists. If the capability does not exist (is not enumerated in the CPUID), the entry is unavailable (no space is reserved for future use here).
CP	R8	Padding	Padding to nearest multiple of 8 bytes. Initialized by the OS to 0 prior to enabling Intel Thread Director.
CP + R8	1	Performance Capability	Class 1 Performance capability is an 8-bit value (0 … 255) specifying the relative performance level of a single logical processor. Higher values indicate higher performance; the lowest performance level of 0 indicates a recommendation to the OS to not schedule any software threads on it for performance reasons. Initialized by the OS to 0.
CP + 1	1	Energy Efficiency Capability	Class 1 Energy Efficiency capability is an 8-bit value (0 … 255) specifying the relative energy efficiency level of a logical processor. Higher values indicate higher energy efficiency; the lowest energy efficiency capability of 0 indicates a recommendation to the OS to not schedule any software threads on it for efficiency reasons. An Energy Efficiency capability of 255 indicates which logical processors have the highest relative energy efficiency capability. In addition, the value 255 is an explicit recommendation for the OS to consolidate work on those logical processors for energy efficiency reasons. Initialized by the OS to 0.
…			
2*CP - 1	1	Capability #(CP-1)	Class 1 Capability #(CP-1) if exists. If the capability does not exist (is not enumerated in the CPUID), the entry is unavailable (no space is reserved for future use here).

Table 15-9. Intel® Thread Director Logical Processor Entry Structure (Contd.)

Byte Offset	Size (Bytes)	Field Name	Description
2*CP	R8	Padding	Padding to nearest multiple of 8 bytes. Initialized by the OS to 0 prior to enabling Intel Thread Director.
…			
(CL-1)*CP	1	Performance Capability	Class #(CL-1) Performance capability is an 8-bit value (0 … 255) specifying the relative performance level of a single logical processor. Higher values indicate higher performance; the lowest performance level of 0 indicates a recommendation to the OS to not schedule any software threads on it for performance reasons. Initialized by the OS to 0.
(CL-1)*CP + 1	1	Energy Efficiency Capability	Class #(CL-1) Energy Efficiency capability is an 8-bit value (0 … 255) specifying the relative energy efficiency level of a logical processor. Higher values indicate higher energy efficiency; the lowest energy efficiency capability of 0 indicates a recommendation to the OS to not schedule any software threads on it for efficiency reasons. An Energy Efficiency capability of 255 indicates which logical processors have the highest relative energy efficiency capability. In addition, the value 255 is an explicit recommendation for the OS to consolidate work on those logical processors for energy efficiency reasons. Initialized by the OS to 0.
…			
CL*CP - 1	1	Capability #(CP-1)	Class #(CL-1) Capability #(CP-1) if exists. If the capability does not exist (is not enumerated in the CPUID), the entry is unavailable (no space is reserved for future use here).
CL*CP	R8	Padding	Padding to nearest multiple of 8 bytes. Initialized by the OS to 0 prior to enabling Intel Thread Director.

15.6.3 Intel® Thread Director Usage Model

When the OS Scheduler needs to decide which one of multiple free logical processors to assign to a software thread that is ready to execute, it can choose one of the following options:

1. The free logical processor with the highest performance value of that software thread class, if the system is scheduling for performance.
2. The free logical processor with the highest energy efficiency value of that software thread class, if the system is scheduling for energy efficiency.

When the OS Scheduler needs to decide which of two logical processors (i,j) to assign to which of two software threads whose Class IDs are k1 and k2, it can compute the two performance ratios: Perf $Ratio_1$ = $Perf_{ik1}$ / $Perf_{jk1}$ and Perf $Ratio_2$ = $Perf_{ik2}$ / $Perf_{jk2}$, or two energy efficiency ratios: Energy Eff. $Ratio_1$ = Energy Eff_{ik1} / Energy Eff_{jk1} and Energy Eff. $Ratio_2$ = Energy Eff_{ik2} / Energy Eff_{jk2} between the two logical processors for each of the two classes, depending on whether the OS is scheduling for performance or for energy efficiency.

For example, assume that the system is scheduling for performance and that Perf $Ratio_1$ > Perf $Ratio_2$. The OS Scheduler will assign the software thread whose Class ID is k1 to logical processor i, and the one whose Class ID is k2 to logical processor j.

When the two software threads in question belong to the same Class ID, the OS Scheduler can schedule to higher performance logical processors within that class when scheduling for performance and to higher energy efficiency logical processors within that class when scheduling for energy efficiency.

The highest to lowest ordering may be different between classes across cores and between the performance column and the energy efficiency column of the same class across cores.

15.6.4 Hardware Feedback Interface Pointer

The physical address of the HFI/Intel Thread Director structure is programmed by the OS into a package scoped MSR named IA32_HW_FEEDBACK_PTR. The MSR is structured as follows:

- Bits 63:MAXPHYADDR[1] – Reserved.
- Bits MAXPHYADDR-1:12 – ADDR. This is the physical address of the page frame of the first page of this structure.
- Bits 11:1 – Reserved.
- Bit 0 – Valid. When set to 1, indicates a valid pointer is programmed into the ADDR field of the MSR.

The address of this MSR is 17D0H. This MSR is cleared on processor reset to its default value of 0. It retains its value upon INIT.

CPUID.06H.0H:EDX[11:8] enumerates the size of memory that must be allocated by the OS for this structure.

15.6.5 Hardware Feedback Interface Configuration

The operating system enables HFI/Intel Thread Director using a package scoped MSR named IA32_HW_FEEDBACK_CONFIG (address 17D1H). This MSR is cleared on processor reset to its default value of 0. It retains its value upon INIT.

The MSR is structured as follows:

- Bits 63:2 – Reserved.
- Bit 1 – Enable Intel Thread Director (or multi-class support). Both bits 0 and 1 must be set for Intel Thread Director to be enabled. The extra class columns in the Intel Thread Director table are updated by hardware immediately following setting those two bits, as well as during run time as necessary.
- Bit 0 – Enable. When set to 1, enables HFI.

Before enabling HFI, the OS must set a valid hardware feedback interface structure using IA32_HW_FEEDBACK_PTR.

When the OS sets bit 0 only, the hardware populates class 0 capabilities only in the HFI structure. When bit 1 is set after or together with bit 0, the Intel Thread Director multi-class structure is populated.

When either the HFI structure or the Intel Thread Director structure are ready to use by the OS, the hardware sets IA32_PACKAGE_THERM_STATUS[bit 26]. An interrupt is generated by the hardware if IA32_PACKAGE_THERM_INTERRUPT[bit 25] is set.

When the OS clears bit 1 but leaves bit 0 set, Intel Thread Director is disabled, but HFI is kept operational. IA32_PACKAGE_THERM_STATUS[bit 26] is NOT set in this case.

Clearing bit 0 disables both HFI and Intel Thread Director, independent of the bit 1 state. Setting bit 1 to '1' while keeping bit 0 at '0' is an invalid combination which is quietly ignored.

When the OS clears bit 0, hardware sets the IA32_PACKAGE_THERM_STATUS[bit 26] to 1 to acknowledge disabling of the interface. The OS should wait for this bit to be set to 1 to reclaim the memory of the Intel Thread Director structure, as by setting IA32_PACKAGE_THERM_STATUS[bit 26] hardware guarantees not to write into the Intel Thread Director structure anymore.

The OS may clear bit 0 only after receiving an indication from the hardware that the structure initialization is complete via the same IA32_PACKAGE_THERM_STATUS[bit 26], following enabling of HFI/Intel Thread Director, thus avoiding a race condition between OS and hardware.

Bit 1 is valid only if CPUID[6].EAX[bit 23] is set. When setting this bit while support is not enumerated, the hardware generates #GP.

Table 15-10 summarizes the control options described above.

See Section 15.6.9 for details on scenarios where IA32_HW_FEEDBACK_CONFIG bits are implicitly reset by the hardware.

1. MAXPHYADDR is reported in CPUID.80000008H:EAX[7:0].

Table 15-10. IA32_HW_FEEDBACK_CONFIG Control Options

Pre-Bit 1	Pre-Bit 0	Post-Bit 1	Post-Bit 0	Action	IA32_PACKAGE_THERM_STATUS [bit 26] and Interrupt
0	0	0	0	Reset value.	Both Hardware Feedback Interface and Intel Thread Director are disabled, no status bit set, no interrupt is generated.
0	0	0	1	Enable HFI structure.	Set the status bit and generate interrupt if enabled.
0	0	1	0	Invalid option; quietly ignored by the hardware.	No action (no update in the table).
0	0	1	1	Enable HFI and Intel Thread Director.	Set the status bit and generate interrupt if enabled.
0	1	0	0	Disable HFI support.	Set the status bit and generate interrupt if enabled.
0	1	1	0	Disable HFI and Intel Thread Director.	Set the status bit and generate interrupt if enabled.
0	1	1	1	Enable Intel Thread Director.	Set the status bit and generate interrupt if enabled.
1	0	0	0	No action; keeps HFI and Intel Thread Director disabled.	No action (no update in the table).
1	0	0	1	Enable HFI.	Set the status bit and generate interrupt if enabled.
1	0	1	1	Enable HFI and Intel Thread Director.	Set the status bit and generate interrupt if enabled.
1	1	0	0	Disable HFI and Intel Thread Director.	Set the status bit and generate interrupt if enabled.
1	1	0	1	Disable Intel Thread Director; keep HFI enabled.	No action (no update in the table).
1	1	1	0	Disable HFI and Intel Thread Director.	Set the status bit and generate interrupt if enabled.

15.6.6 Hardware Feedback Interface Notifications

The IA32_PACKAGE_THERM_STATUS MSR is extended with a new bit, hardware feedback interface structure change status (bit 26, R/WC0), to indicate that the hardware has updated the HFI/Intel Thread Director structure. This is a sticky bit and once set, indicates that the OS should read the structure to determine the change and adjust its scheduling decisions. Once set, the hardware will not generate any further updates to this structure until the OS clears this bit by writing 0.

The OS can enable interrupt-based notifications when the structure is updated by hardware through a new enable bit, hardware feedback interrupt enable (bit 25, R/W), in the IA32_PACKAGE_THERM_INTERRUPT MSR. When this bit is set to 1, it enables the generation of an interrupt when the HFI/Intel Thread Director structure is updated by hardware. When the enable bit transitions from 0 to 1, hardware will generate an initial notify, with the IA32_PACKAGE_THERM_STATUS bit 26 set to 1, to indicate that the OS should read the current HFI/Intel Thread Director structure.

15.6.7 Hardware Feedback Interface and Intel® Thread Director Structure Dynamic Update

The HFI/Intel Thread Director structure can be updated dynamically during run time. Changes to the structure may occur to one or more of its cells. Such changes may occur for one or more logical processors. The hardware sets a non-zero value in the "capability change" field of the HFI/Intel Thread Director structure as an indication for the OS to read that capability for all logical processors. A thermal interrupt is delivered to indicate to the OS that the structure has just changed. Section 15.6.6 contains more details on this notification mechanism. The hardware clears all "capability change" fields after the OS resets IA32_PACKAGE_THERM_STATUS[bit 26].

Zeroing a performance or energy efficiency cell hints to the OS that it is beneficial not to schedule software threads of that class on the associated logical processor for performance or energy efficiency reasons, respectively. If SMT is supported, it may be the case that the hardware zeroes one of the core's logical processors only. Zeroing the performance and energy efficiency cells of all classes for a logical processor implies that the hardware provides a hint to the OS to completely avoid scheduling work on that logical processor.

Zeroing a performance and energy efficiency cell hint of a logical processor across all classes along with Capability Flag bit 1 set to 1 across all capabilities and classes, indicates to the OS to force idle logical processor(s), and if affinitized activity occurs on those logical processor(s), the OS should inject idle periods such that overall utilization of those idled cores has a minimal-to-no impact to power. Capability Flag bit 1 will be set to 1 while this hint persists.

When EE=255 is set on one or more logical processors, it represents a request that the OS attempt to consolidate work to those logical processors with EE=255. These requests are made when the SOC has knowledge that consolidating the work to a subset of cores will result in significantly better platform energy efficiency. Examples of consolidating work would include, but not limited to, delaying less important work as needed to provide compute bandwidth for more important work, and routing interrupts to the logical processors with EE=255. When the cumulative workload requires performance greater than that which is available on the subset of cores with EE=255, it is expected that the OS will scale the work out to additional logical processors.

A few example reasons for runtime changes in the HGS/Intel Thread Director Table:

- Over clocking run time update that changes the capability values.
- Change in run time physical constraints.
- Run time performance or energy efficiency optimization.
- Change in core frequency, voltage, or power budget.

15.6.8 Logical Processor Scope Intel® Thread Director Configuration

The operating system enables Intel Thread Director at the logical processor scope using a logical processor scope MSR named IA32_HW_FEEDBACK_THREAD_CONFIG (address 17D4H).

The MSR is read/write and is structured as follows:

- Bits 63:1 – Reserved.
- Bit 0 – Enables Intel Thread Director. When set to 1, logical processor scope Intel Thread Director is enabled. Default is 0 (disabled).

Bit 0 of the logical processor scope configuration MSR can be cleared or set regardless of the state of the HFI/Intel Thread Director package configuration MSR state. Even when bit 0 of all logical processor configuration MSRs is clear, the processor can still update the Intel Thread Director structure if it is still enabled in the IA32_HW_FEEDBACK_CONFIG package scope MSR. When the operating system clears IA32_HW_FEEDBACK_THREAD_CONFIG[bit 0], hardware clears the history accumulated on that logical processor which otherwise drives assigning the Class ID to the software thread that executes on that logical processor. As long as IA32_HW_FEEDBACK_THREAD_CONFIG[bit 0] is set, the Class ID is available for the operating system to read, independent of the state of the package scope IA32_HW_FEEDBACK_CONFIG[1:0] bits.

See Section 15.6.9 for details on scenarios where IA32_HW_FEEDBACK_CONFIG bits are implicitly reset by the hardware.

15.6.9 Implicit Reset of Package and Logical Processor Scope Configuration MSRs

HFI/Intel Thread Director enable bits are reset by hardware in the following scenarios:

1. When GETSEC[SENTER] is executed:
   a. The processor implicitly resets the HFI/Intel Thread Director enable bits in the IA32_HW_FEEDBACK_CONFIG MSR on all sockets (packages) in the system.
   b. The processor implicitly resets the Intel Thread Director enable bit in the IA32_HW_FEEDBACK_THREAD_CONFIG MSR on all logical processors in the system across all sockets.
   c. The processor implicitly clears the HFI/Intel Thread Director table structure pointer in the IA32_HW_FEEDBACK_PTR package MSR across all sockets.
2. When GETSEC[ENTERACCS] is executed:
   a. The processor implicitly resets the HFI/Intel Thread Director enable bits in the IA32_HW_FEEDBACK_CONFIG MSR on the socket where the GETSEC[ENTERACCS] instruction was executed.
   b. The processor implicitly resets the Intel Thread Director enable bit in the IA32_HW_FEEDBACK_THREAD_CONFIG MSR on all logical processors on the socket where the GETSEC[ENTERACCS] instruction was executed.
   c. The processor implicitly clears the HFI/Intel Thread Director table structure pointer in the IA32_HW_FEEDBACK_PTR package MSR on the socket where the GETSEC[ENTERACCS] instruction was executed.
3. When an INIT or a wait-for-SIPI state are processed by a logical processor:
   a. The processor implicitly resets the Intel Thread Director enable bit in the IA32_HW_FEEDBACK_THREAD_CONFIG MSR on that logical processor, whether the signal was in the context of GETSEC[ENTERACCS] or not.

If the OS requires HFI/Intel Thread Director to be active after exiting the measured environment or when processing a SIPI event, it should re-enable HFI/Intel Thread Director.

15.6.10 Logical Processor Scope Intel® Thread Director Run Time Characteristics

The processor provides the operating system with run time feedback about the execution characteristics of the software thread executing on logical processors whose IA32_HW_FEEDBACK_THREAD_CONFIG[bit 0] is set.

The run time feedback is communicated via a read-only MSR named IA32_THREAD_FEEDBACK_CHAR. This is a logical processor scope MSR whose address is 17D2H. This MSR is structured as follows:

- Bit 63 – Valid bit. When set to 1 the OS Scheduler can use the Class ID (in bits 7:0) for its scheduling decisions. If this bit is 0, the Class ID field should be ignored. It is recommended that the OS uses the last known Class ID of the software thread for its scheduling decisions.
- Bits 62:8 – Reserved.
- Bits 7:0 – Application Class ID, pointing into the Intel Thread Director structure described in Table 15-8.

This MSR is valid only if CPUID.06H:EAX[bit 23] is set.

The valid bit is cleared by the hardware in the following cases:

- The hardware does not have enough information to provide the operating system with a reliable Class ID.
- The operating system cleared the logical processor's IA32_HW_FEEDBACK_THREAD_CONFIG[bit 0] bit.

The HRESET instruction is executed while configured to reset the Intel Thread Director history.

15.6.11 Logical Processor Scope History

The operating system can reset the Intel Thread Director related history accumulated on the current logical processor it is executing on by issuing the HRESET instruction. See "CPUID—CPU Identification" in Chapter 3 of the *Intel® 64 and IA-32 Architectures Software Developer's Manual, Volume 2A* for enumeration of the HRESET

instruction. See also the "HRESET—History Reset" instruction description in Chapter 3 of the *Intel® 64 and IA-32 Architectures Software Developer's Manual, Volume 2A*.

15.6.11.1 Enabling Intel® Thread Director History Reset

The IA32_HRESET_ENABLE MSR is a read/write MSR and is structured as follows:

- Bits 63:32 – Reserved.
- Bits 31:1 – Reserved for other capabilities that can be reset by the HRESET instruction.
- Bit 0 – Enable reset of the Intel Thread Director history.

The operating system should set IA32_HRESET_ENABLE[bit 0] to enable Intel Thread Director history reset via the HRESET instruction.

15.6.11.2 Implicit Intel® Thread Director History Reset

The Intel Thread Director history is implicitly reset in the following scenarios:

1. When the processor enters or exits SMM mode and IA32_DEBUGCTL MSR.FREEZE_WHILE_SMM (bit 14) is set, the Intel Thread Director history is implicitly reset by the processor.
2. When GETSEC[SENTER] is executed, the processor resets the Intel Thread Director history on all logical processors in the system, including logical processors on other sockets (other than the one GETSEC[SENTER] is executed).
3. When GETSEC[ENTERACCS] is executed, the processor resets the Intel Thread Director history on the logical processor it is executed on.
4. When an INIT or a wait-for-SIPI state are processed by a logical processor, the Intel Thread Director history is reset whether the signal was a result of GETSEC[ENTERACCS] or not.

If the operating system requires HFI/Intel Thread Director to be active after exiting the measured environment or when processing a SIPI event, it should re-enable HFI/Intel Thread Director.

15.7 MWAIT EXTENSIONS FOR ADVANCED POWER MANAGEMENT

IA-32 processors may support a number of C-states[1] that reduce power consumption for inactive states. Intel Core Solo and Intel Core Duo processors support both deeper C-state and MWAIT extensions that can be used by OS to implement power management policy.

Software should use CPUID to discover if a target processor supports the enumeration of MWAIT extensions. If CPUID.05H.ECX[Bit 0] = 1, the target processor supports MWAIT extensions and their enumeration (see Chapter 4, "Instruction Set Reference, M-U," of *Intel® 64 and IA-32 Architectures Software Developer's Manual, Volume 2B*).

If CPUID.05H.ECX[Bit 1] = 1, the target processor supports using interrupts as break-events for MWAIT, even when interrupts are disabled. Use this feature to measure C-state residency as follows:

- Software can write to bit 0 in the MWAIT Extensions register (ECX) when issuing an MWAIT to enter into a processor-specific C-state or sub C-state.
- When a processor comes out of an inactive C-state or sub C-state, software can read a timestamp before an interrupt service routine (ISR) is potentially executed.

CPUID.05H.EDX allows software to enumerate processor-specific C-states and sub C-states available for use with MWAIT extensions. IA-32 processors may support more than one C-state of a given C-state type. These are called sub C-states. Numerically higher C-state have higher power savings and latency (upon entering and exiting) than lower-numbered C-state.

1. The processor-specific C-states defined in MWAIT extensions can map to ACPI defined C-state types (C0, C1, C2, C3). The mapping relationship depends on the definition of a C-state by processor implementation and is exposed to OSPM by the BIOS using the ACPI defined _CST table.

At CPL = 0, system software can specify desired C-state and sub C-state by using the MWAIT hints register (EAX). Processors will not go to C-state and sub C-state deeper than what is specified by the hint register. If CPL > 0 and if MONITOR/MWAIT is supported at CPL > 0, the processor will only enter C1-state (regardless of the C-state request in the hints register).

Executing MWAIT generates an exception on processors operating at a privilege level where MONITOR/MWAIT are not supported.

NOTE

If MWAIT is used to enter a C-state (including sub C-state) that is numerically higher than C1, a store to the address range armed by MONITOR instruction will cause the processor to exit MWAIT if the store was originated by other processor agents. A store from non-processor agent may not cause the processor to exit MWAIT.

15.8 THERMAL MONITORING AND PROTECTION

The IA-32 architecture provides the following mechanisms for monitoring temperature and controlling thermal power:

1. The **catastrophic shutdown detector** forces processor execution to stop if the processor's core temperature rises above a preset limit.
2. **Automatic and adaptive thermal monitoring mechanism**s force the processor to reduce it's power consumption in order to operate within predetermined temperature limits.
3. The **software controlled clock modulation mechanism** permits operating systems to implement power management policies that reduce power consumption; this is in addition to the reduction offered by automatic thermal monitoring mechanisms.
4. **On-die digital thermal sensor and interrupt mechanisms** permit the OS to manage thermal conditions natively without relying on BIOS or other system board components.

The first mechanism is not visible to software. The other three mechanisms are visible to software using processor feature information returned by executing CPUID with EAX = 1.

The second mechanism includes:

- **Automatic thermal monitoring** provides two modes of operation. One mode modulates the clock duty cycle; the second mode changes the processor's frequency. Both modes are used to control the core temperature of the processor.
- **Adaptive thermal monitoring** can provide flexible thermal management on processors made of multiple cores.

The third mechanism modulates the clock duty cycle of the processor. As shown in Figure 15-24, the phrase 'duty cycle' does not refer to the actual duty cycle of the clock signal. Instead it refers to the time period during which the clock signal is allowed to drive the processor chip. By using the stop clock mechanism to control how often the processor is clocked, processor power consumption can be modulated.

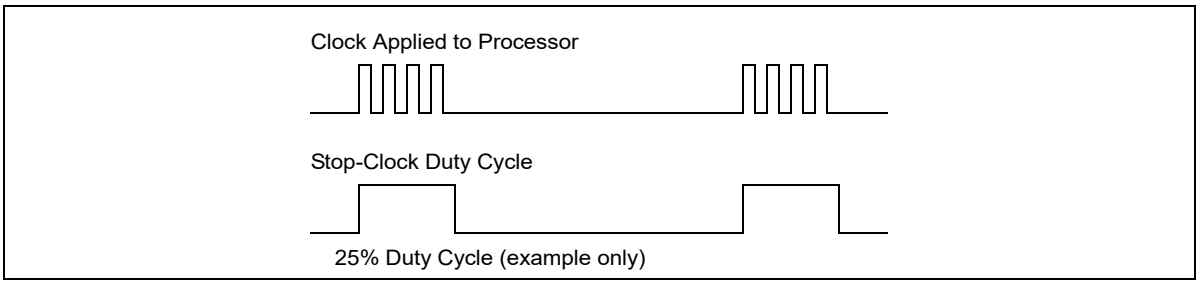

Figure 15-24. Processor Modulation Through Stop-Clock Mechanism

For previous automatic thermal monitoring mechanisms, software controlled mechanisms that changed processor operating parameters to impact changes in thermal conditions. Software did not have native access to the native thermal condition of the processor; nor could software alter the trigger condition that initiated software program control.

The fourth mechanism (listed above) provides access to an on-die digital thermal sensor using a model-specific register and uses an interrupt mechanism to alert software to initiate digital thermal monitoring.

15.8.1 Catastrophic Shutdown Detector

P6 family processors introduced a thermal sensor that acts as a catastrophic shutdown detector. This catastrophic shutdown detector was also implemented in Pentium 4, Intel Xeon and Pentium M processors. It is always enabled. When processor core temperature reaches a factory preset level, the sensor trips and processor execution is halted until after the next reset cycle.

15.8.2 Thermal Monitor

Pentium 4, Intel Xeon and Pentium M processors introduced a second temperature sensor that is factory-calibrated to trip when the processor's core temperature crosses a level corresponding to the recommended thermal design envelop. The trip-temperature of the second sensor is calibrated below the temperature assigned to the catastrophic shutdown detector.

15.8.2.1 Thermal Monitor 1

The Pentium 4 processor uses the second temperature sensor in conjunction with a mechanism called Thermal Monitor 1 (TM1) to control the core temperature of the processor. TM1 controls the processor's temperature by modulating the duty cycle of the processor clock. Modulation of duty cycles is processor model specific. Note that the processors STPCLK# pin is not used here; the stop-clock circuitry is controlled internally.

Support for TM1 is indicated by CPUID.1:EDX.TM[bit 29] = 1.

TM1 is enabled by setting the thermal-monitor enable flag (bit 3) in IA32_MISC_ENABLE [see Chapter 2, "Model-Specific Registers (MSRs)" in the *Intel® 64 and IA-32 Architectures Software Developer's Manual, Volume 4*]. Following a power-up or reset, the flag is cleared, disabling TM1. BIOS is required to enable only one automatic thermal monitoring modes. Operating systems and applications must not disable the operation of these mechanisms.

15.8.2.2 Thermal Monitor 2

An additional automatic thermal protection mechanism, called Thermal Monitor 2 (TM2), was introduced in the Intel Pentium M processor and also incorporated in newer models of the Pentium 4 processor family. Intel Core Duo and Solo processors, and Intel Core 2 Duo processor family all support TM1 and TM2. TM2 controls the core temperature of the processor by reducing the operating frequency and voltage of the processor and offers a higher performance level for a given level of power reduction than TM1.

TM2 is triggered by the same temperature sensor as TM1. The mechanism to enable TM2 may be implemented differently across various IA-32 processor families with different CPUID signatures in the family encoding value, but will be uniform within an IA-32 processor family.

Support for TM2 is indicated by CPUID.1:ECX.TM2[bit 8] = 1.

15.8.2.3 Two Methods for Enabling TM2

On processors with CPUID family/model/stepping signature encoded as 0x69n or 0x6Dn (early Pentium M processors), TM2 is enabled if the TM_SELECT flag (bit 16) of the MSR_THERM2_CTL register is set to 1 (Figure 15-25) and bit 3 of the IA32_MISC_ENABLE register is set to 1.

Following a power-up or reset, the TM_SELECT flag may be cleared. BIOS is required to enable either TM1 or TM2. Operating systems and applications must not disable mechanisms that enable TM1 or TM2. If bit 3 of the

IA32_MISC_ENABLE register is set and TM_SELECT flag of the MSR_THERM2_CTL register is cleared, TM1 is enabled.

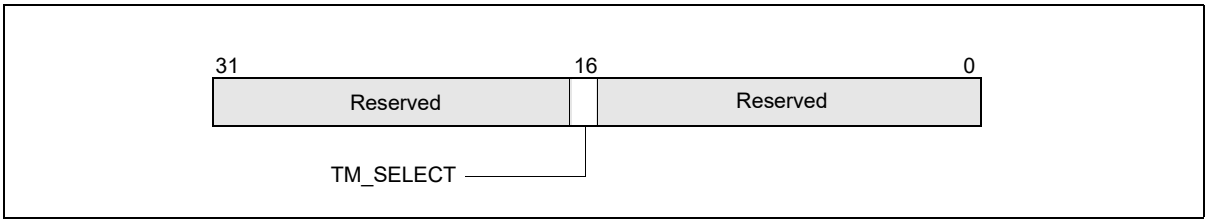

Figure 15-25. MSR_THERM2_CTL Register On Processors with CPUID Family/Model/Stepping Signature Encoded as 0x69n or 0x6Dn

On processors introduced after the Pentium 4 processor (this includes most Pentium M processors), the method used to enable TM2 is different. TM2 is enable by setting bit 13 of IA32_MISC_ENABLE register to 1. This applies to Intel Core Duo, Core Solo, and Intel Core 2 processor family.

The target operating frequency and voltage for the TM2 transition after TM2 is triggered is specified by the value written to MSR_THERM2_CTL, bits 15:0 (Figure 15-26). Following a power-up or reset, BIOS is required to enable at least one of these two thermal monitoring mechanisms. If both TM1 and TM2 are supported, BIOS may choose to enable TM2 instead of TM1. Operating systems and applications must not disable the mechanisms that enable TM1or TM2; and they must not alter the value in bits 15:0 of the MSR_THERM2_CTL register.

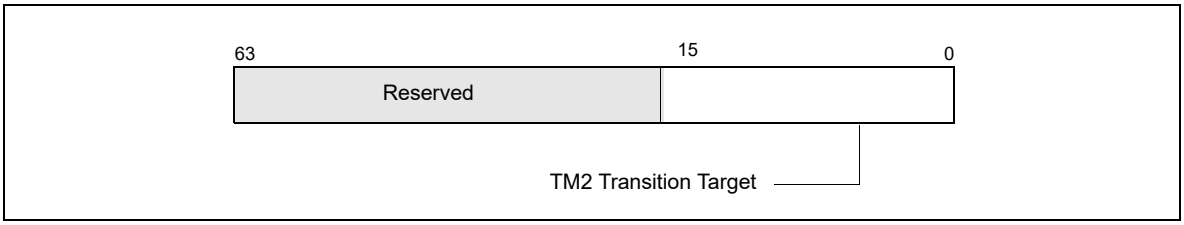

Figure 15-26. MSR_THERM2_CTL Register for Supporting TM2

15.8.2.4 Performance State Transitions and Thermal Monitoring

If the thermal control circuitry (TCC) for thermal monitor (TM1/TM2) is active, writes to the IA32_PERF_CTL will effect a new target operating point as follows:

- If TM1 is enabled and the TCC is engaged, the performance state transition can commence before the TCC is disengaged.
- If TM2 is enabled and the TCC is engaged, the performance state transition specified by a write to the IA32_PERF_CTL will commence after the TCC has disengaged.

15.8.2.5 Thermal Status Information

The status of the temperature sensor that triggers the thermal monitor (TM1/TM2) is indicated through the thermal status flag and thermal status log flag in the IA32_THERM_STATUS MSR (see Figure 15-27).

The functions of these flags are:

- **Thermal Status flag, bit 0** — When set, indicates that the processor core temperature is currently at the trip temperature of the thermal monitor and that the processor power consumption is being reduced via either TM1 or TM2, depending on which is enabled. When clear, the flag indicates that the core temperature is below the thermal monitor trip temperature. This flag is read only.

- **Thermal Status Log flag, bit 1** — When set, indicates that the thermal sensor has tripped since the last power-up or reset or since the last time that software cleared this flag. This flag is a sticky bit; once set it remains set until cleared by software or until a power-up or reset of the processor. The default state is clear.

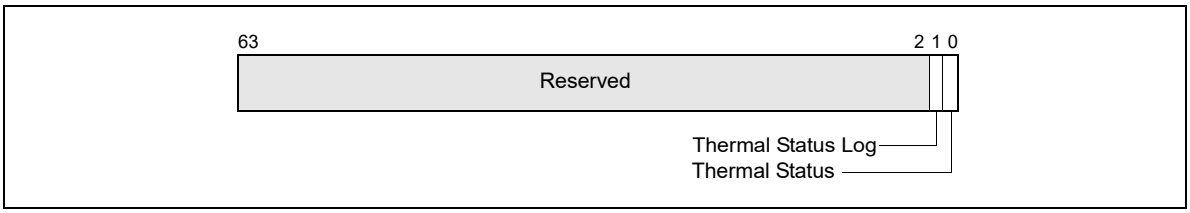

Figure 15-27. IA32_THERM_STATUS MSR

After the second temperature sensor has been tripped, the thermal monitor (TM1/TM2) will remain engaged for a minimum time period (on the order of 1 ms). The thermal monitor will remain engaged until the processor core temperature drops below the preset trip temperature of the temperature sensor, taking hysteresis into account.

While the processor is in a stop-clock state, interrupts will be blocked from interrupting the processor. This holding off of interrupts increases the interrupt latency, but does not cause interrupts to be lost. Outstanding interrupts remain pending until clock modulation is complete.

The thermal monitor can be programmed to generate an interrupt to the processor when the thermal sensor is tripped; this is called a thermal interrupt. The delivery mode, mask, and vector for this interrupt can be programmed through the thermal entry in the local APIC's LVT (see Section 11.5.1, "Local Vector Table"). The low-temperature interrupt enable and high-temperature interrupt enable flags in the IA32_THERM_INTERRUPT MSR (see Figure 15-28) control when the interrupt is generated; that is, on a transition from a temperature below the trip point to above and/or vice-versa.

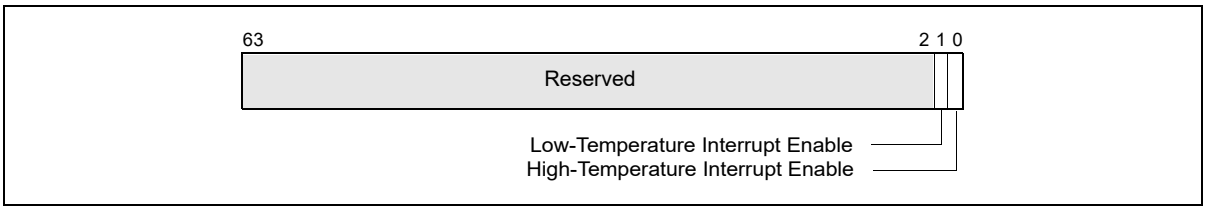

Figure 15-28. IA32_THERM_INTERRUPT MSR

- **High-Temperature Interrupt Enable flag, bit 0** — Enables an interrupt to be generated on the transition from a low-temperature to a high-temperature when set; disables the interrupt when clear.(R/W).
- **Low-Temperature Interrupt Enable flag, bit 1** — Enables an interrupt to be generated on the transition from a high-temperature to a low-temperature when set; disables the interrupt when clear.

The thermal interrupt can be masked by the thermal LVT entry. After a power-up or reset, the low-temperature interrupt enable and high-temperature interrupt enable flags in the IA32_THERM_INTERRUPT MSR are cleared (interrupts are disabled) and the thermal LVT entry is set to mask interrupts. This interrupt should be handled either by the operating system or system management mode (SMM) code.

Note that the operation of the thermal monitoring mechanism has no effect upon the clock rate of the processor's internal high-resolution timer (time stamp counter).

15.8.2.6 Adaptive Thermal Monitor

The Intel Core 2 Duo processor family supports enhanced thermal management mechanism, referred to as Adaptive Thermal Monitor (Adaptive TM).

Unlike TM2, Adaptive TM is not limited to one TM2 transition target. During a thermal trip event, Adaptive TM (if enabled) selects an optimal target operating point based on whether or not the current operating point has effectively cooled the processor.

Similar to TM2, Adaptive TM is enable by BIOS. The BIOS is required to test the TM1 and TM2 feature flags and enable all available thermal control mechanisms (including Adaptive TM) at platform initiation.

Adaptive TM is available only to a subset of processors that support TM2.

In each chip-multiprocessing (CMP) silicon die, each core has a unique thermal sensor that triggers independently. These thermal sensor can trigger TM1 or TM2 transitions in the same manner as described in Section 15.8.2.1 and Section 15.8.2.2. The trip point of the thermal sensor is not programmable by software since it is set during the fabrication of the processor.

Each thermal sensor in a processor core may be triggered independently to engage thermal management features. In Adaptive TM, both cores will transition to a lower frequency and/or lower voltage level if one sensor is triggered.

Triggering of this sensor is visible to software via the thermal interrupt LVT entry in the local APIC of a given core.

15.8.3 Software Controlled Clock Modulation

Pentium 4, Intel Xeon and Pentium M processors also support software-controlled clock modulation. This provides a means for operating systems to implement a power management policy to reduce the power consumption of the processor. Here, the stop-clock duty cycle is controlled by software through the IA32_CLOCK_MODULATION MSR (see Figure 15-29).

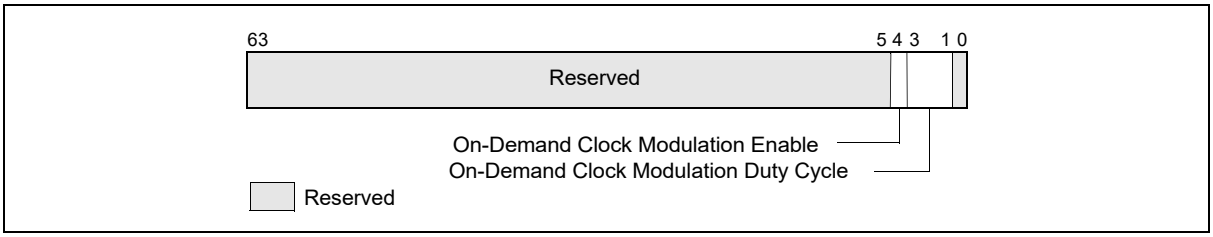

Figure 15-29. IA32_CLOCK_MODULATION MSR

The IA32_CLOCK_MODULATION MSR contains the following flag and field used to enable software-controlled clock modulation and to select the clock modulation duty cycle:

- **On-Demand Clock Modulation Enable, bit 4** — Enables on-demand software controlled clock modulation when set; disables software-controlled clock modulation when clear.
- **On-Demand Clock Modulation Duty Cycle, bits 1 through 3** — Selects the on-demand clock modulation duty cycle (see Table 15-11). This field is only active when the on-demand clock modulation enable flag is set.

Note that the on-demand clock modulation mechanism (like the thermal monitor) controls the processor's stop-clock circuitry internally to modulate the clock signal. The STPCLK# pin is not used in this mechanism.

Table 15-11. On-Demand Clock Modulation Duty Cycle Field Encoding

Duty Cycle Field Encoding	Duty Cycle
000B	Reserved
001B	12.5% (Default)
010B	25.0%
011B	37.5%
100B	50.0%
101B	63.5%
110B	75%
111B	87.5%

The on-demand clock modulation mechanism can be used to control processor power consumption. Power management software can write to the IA32_CLOCK_MODULATION MSR to enable clock modulation and to select a modulation duty cycle. If on-demand clock modulation and TM1 are both enabled and the thermal status of the processor is hot (bit 0 of the IA32_THERM_STATUS MSR is set), clock modulation at the duty cycle specified by TM1 takes precedence, regardless of the setting of the on-demand clock modulation duty cycle.

For Hyper-Threading Technology enabled processors, the IA32_CLOCK_MODULATION register is duplicated for each logical processor. In order for the On-demand clock modulation feature to work properly, the feature must be enabled on all the logical processors within a physical processor. If the programmed duty cycle is not identical for all the logical processors, the processor core clock will modulate to the highest duty cycle programmed for processors with any of the following CPUID DisplayFamily_DisplayModel signatures (see CPUID instruction in Chapter3, "Instruction Set Reference, A-L" in the *Intel® 64 and IA-32 Architectures Software Developer's Manual, Volume 2A*): 06_1A, 06_1C, 06_1E, 06_1F, 06_25, 06_26, 06_27, 06_2C, 06_2E, 06_2F, 06_35, 06_36, and 0F_xx. For all other processors, if the programmed duty cycle is not identical for all logical processors in the same core, the processor core will modulate at the lowest programmed duty cycle.

For multiple processor cores in a physical package, each processor core can modulate to a programmed duty cycle independently.

For the P6 family processors, on-demand clock modulation was implemented through the chipset, which controlled clock modulation through the processor's STPCLK# pin.

15.8.3.1 Extension of Software Controlled Clock Modulation

Extension of the software controlled clock modulation facility supports on-demand clock modulation duty cycle with 4-bit dynamic range (increased from 3-bit range). Granularity of clock modulation duty cycle is increased to 6.25% (compared to 12.5%).

Four bit dynamic range control is provided by using bit 0 in conjunction with bits 3:1 of the IA32_CLOCK_MODULATION MSR (see Figure 15-30).

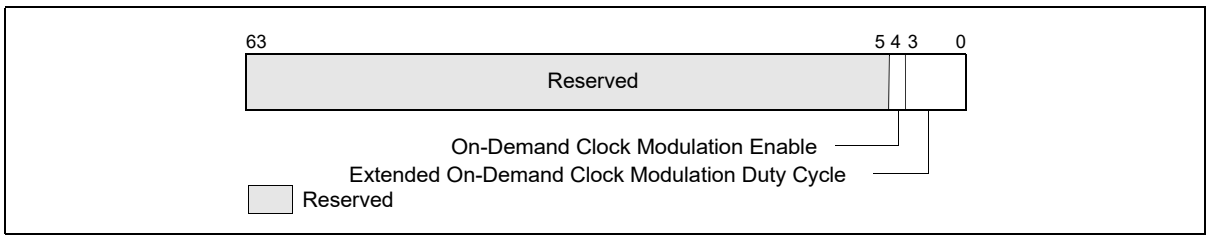

Figure 15-30. IA32_CLOCK_MODULATION MSR with Clock Modulation Extension

Extension to software controlled clock modulation is supported only if CPUID.06H:EAX[Bit 5] = 1. If CPUID.06H:EAX[Bit 5] = 0, then bit 0 of IA32_CLOCK_MODULATION is reserved.

15.8.4 Detection of Thermal Monitor and Software Controlled Clock Modulation Facilities

The ACPI flag (bit 22) of the CPUID feature flags indicates the presence of the IA32_THERM_STATUS, IA32_THERM_INTERRUPT, IA32_CLOCK_MODULATION MSRs, and the xAPIC thermal LVT entry.

The TM1 flag (bit 29) of the CPUID feature flags indicates the presence of the automatic thermal monitoring facilities that modulate clock duty cycles.

15.8.4.1 Detection of Software Controlled Clock Modulation Extension

Processor's support of software controlled clock modulation extension is indicated by CPUID.06H:EAX[Bit 5] = 1.

15.8.5 On Die Digital Thermal Sensors

On die digital thermal sensor can be read using an MSR (no I/O interface). In Intel Core Duo processors, each core has a unique digital sensor whose temperature is accessible using an MSR. The digital thermal sensor is the preferred method for reading the die temperature because (a) it is located closer to the hottest portions of the die, (b) it enables software to accurately track the die temperature and the potential activation of thermal throttling.

15.8.5.1 Digital Thermal Sensor Enumeration

The processor supports a digital thermal sensor if CPUID.06H.EAX[0] = 1. If the processor supports digital thermal sensor, EBX[bits 3:0] determine the number of thermal thresholds that are available for use.

Software sets thermal thresholds by using the IA32_THERM_INTERRUPT MSR. Software reads output of the digital thermal sensor using the IA32_THERM_STATUS MSR.

15.8.5.2 Reading the Digital Sensor

Unlike traditional analog thermal devices, the output of the digital thermal sensor is a temperature relative to the maximum supported operating temperature of the processor.

Temperature measurements returned by digital thermal sensors are always at or below TCC activation temperature. Critical temperature conditions are detected using the "Critical Temperature Status" bit. When this bit is set, the processor is operating at a critical temperature and immediate shutdown of the system should occur. Once the "Critical Temperature Status" bit is set, reliable operation is not guaranteed.

See Figure 15-31 for the layout of IA32_THERM_STATUS MSR. Bit fields include:

- **Thermal Status (bit 0, RO)** — This bit indicates whether the digital thermal sensor high-temperature output signal (PROCHOT#) is currently active. Bit 0 = 1 indicates the feature is active. This bit may not be written by software; it reflects the state of the digital thermal sensor.
- **Thermal Status Log (bit 1, R/WC0)** — This is a sticky bit that indicates the history of the thermal sensor high temperature output signal (PROCHOT#). Bit 1 = 1 if PROCHOT# has been asserted since a previous RESET or the last time software cleared the bit. Software may clear this bit by writing a zero.
- **PROCHOT# or FORCEPR# Event (bit 2, RO)** — Indicates whether PROCHOT# or FORCEPR# is being asserted by another agent on the platform.

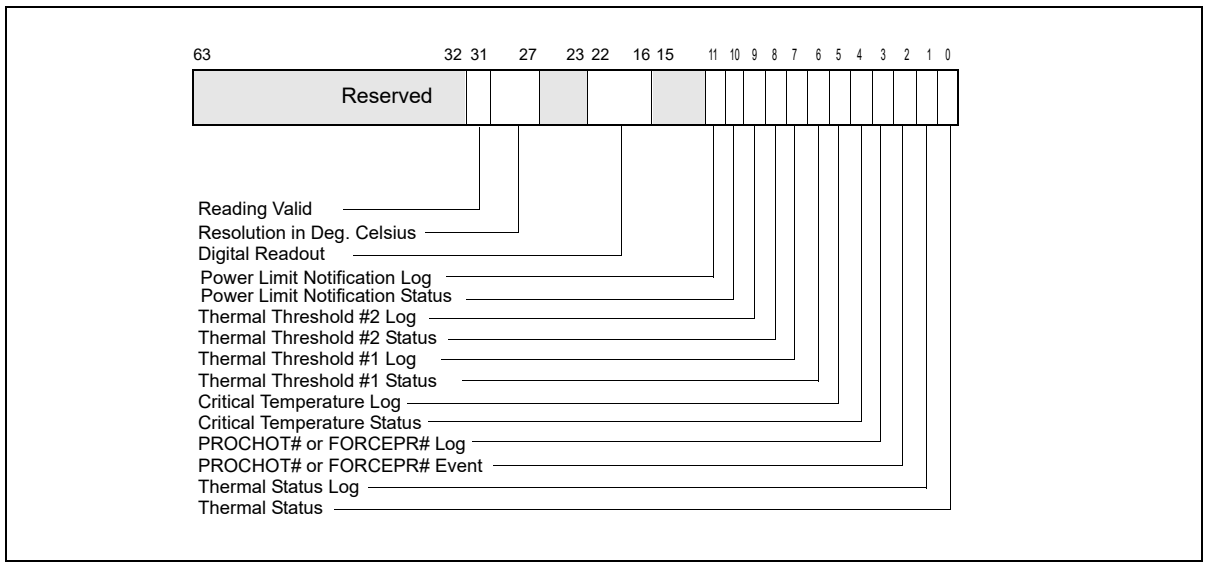

Figure 15-31. IA32_THERM_STATUS Register

- **PROCHOT# or FORCEPR# Log (bit 3, R/WC0)** — Sticky bit that indicates whether PROCHOT# or FORCEPR# has been asserted by another agent on the platform since the last clearing of this bit or a reset. If bit 3 = 1, PROCHOT# or FORCEPR# has been externally asserted. Software may clear this bit by writing a zero. External PROCHOT# assertions are only acknowledged if the Bidirectional Prochot feature is enabled.
- **Critical Temperature Status (bit 4, RO)** — Indicates whether the critical temperature detector output signal is currently active. If bit 4 = 1, the critical temperature detector output signal is currently active.
- **Critical Temperature Log (bit 5, R/WC0)** — Sticky bit that indicates whether the critical temperature detector output signal has been asserted since the last clearing of this bit or reset. If bit 5 = 1, the output signal has been asserted. Software may clear this bit by writing a zero.
- **Thermal Threshold #1 Status (bit 6, RO)** — Indicates whether the actual temperature is currently higher than or equal to the value set in Thermal Threshold #1. If bit 6 = 0, the actual temperature is lower. If bit 6 = 1, the actual temperature is greater than or equal to TT#1. Quantitative information of actual temperature can be inferred from Digital Readout, bits 22:16.
- **Thermal Threshold #1 Log (bit 7, R/WC0)** — Sticky bit that indicates whether the Thermal Threshold #1 has been reached since the last clearing of this bit or a reset. If bit 7 = 1, the Threshold #1 has been reached. Software may clear this bit by writing a zero.
- **Thermal Threshold #2 Status (bit 8, RO)** — Indicates whether actual temperature is currently higher than or equal to the value set in Thermal Threshold #2. If bit 8 = 0, the actual temperature is lower. If bit 8 = 1, the actual temperature is greater than or equal to TT#2. Quantitative information of actual temperature can be inferred from Digital Readout, bits 22:16.
- **Thermal Threshold #2 Log (bit 9, R/WC0)** — Sticky bit that indicates whether the Thermal Threshold #2 has been reached since the last clearing of this bit or a reset. If bit 9 = 1, the Thermal Threshold #2 has been reached. Software may clear this bit by writing a zero.
- **Power Limitation Status (bit 10, RO)** — Indicates whether the processor is currently operating below OS-requested P-state (specified in IA32_PERF_CTL) or OS-requested clock modulation duty cycle (specified in IA32_CLOCK_MODULATION). This field is supported only if CPUID.06H:EAX[bit 4] = 1. Package level power limit notification can be delivered independently to IA32_PACKAGE_THERM_STATUS MSR.
- **Power Notification Log (bit 11, R/WCO)** — Sticky bit that indicates the processor went below OS-requested P-state or OS-requested clock modulation duty cycle since the last clearing of this or RESET. This field is supported only if CPUID.06H:EAX[bit 4] = 1. Package level power limit notification is indicated independently in IA32_PACKAGE_THERM_STATUS MSR.
- **Digital Readout (bits 22:16, RO)** — Digital temperature reading in 1 degree Celsius relative to the TCC activation temperature.

  0: TCC Activation temperature,

  1: (TCC Activation - 1) , etc. See the processor's data sheet for details regarding TCC activation.

  A lower reading in the Digital Readout field (bits 22:16) indicates a higher actual temperature.
- **Resolution in Degrees Celsius (bits 30:27, RO)** — Specifies the resolution (or tolerance) of the digital thermal sensor. The value is in degrees Celsius. It is recommended that new threshold values be offset from the current temperature by at least the resolution + 1 in order to avoid hysteresis of interrupt generation.
- **Reading Valid (bit 31, RO)** — Indicates if the digital readout in bits 22:16 is valid. The readout is valid if bit 31 = 1.

Changes to temperature can be detected using two thresholds (see Figure 15-32); one is set above and the other below the current temperature. These thresholds have the capability of generating interrupts using the core's local APIC which software must then service. Note that the local APIC entries used by these thresholds are also used by the Intel® Thermal Monitor; it is up to software to determine the source of a specific interrupt.

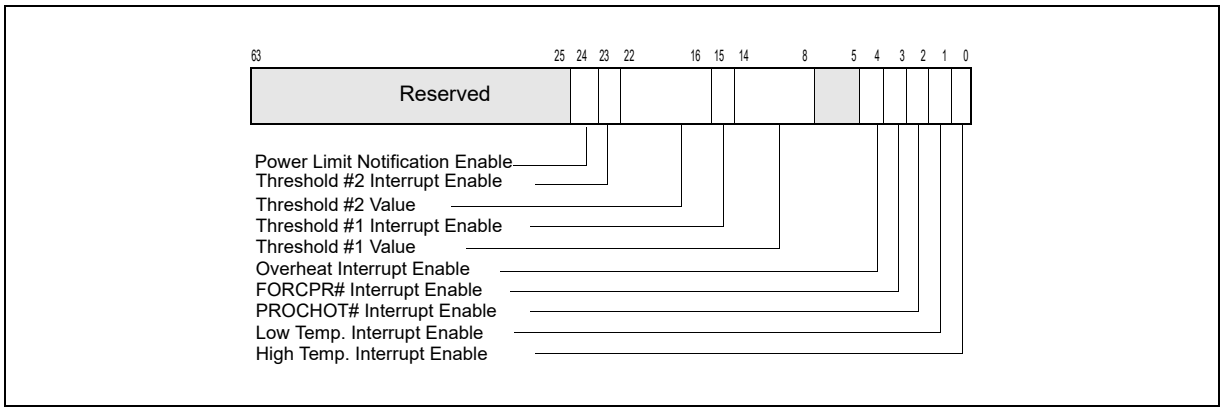

Figure 15-32. IA32_THERM_INTERRUPT Register

See Figure 15-32 for the layout of IA32_THERM_INTERRUPT MSR. Bit fields include:

- **High-Temperature Interrupt Enable (bit 0, R/W)** — This bit allows the BIOS to enable the generation of an interrupt on the transition from low-temperature to a high-temperature threshold. Bit 0 = 0 (default) disables interrupts; bit 0 = 1 enables interrupts.
- **Low-Temperature Interrupt Enable (bit 1, R/W)** — This bit allows the BIOS to enable the generation of an interrupt on the transition from high-temperature to a low-temperature (TCC de-activation). Bit 1 = 0 (default) disables interrupts; bit 1 = 1 enables interrupts.
- **PROCHOT# Interrupt Enable (bit 2, R/W)** — This bit allows the BIOS or OS to enable the generation of an interrupt when PROCHOT# has been asserted by another agent on the platform and the Bidirectional Prochot feature is enabled. Bit 2 = 0 disables the interrupt; bit 2 = 1 enables the interrupt.
- **FORCEPR# Interrupt Enable (bit 3, R/W)** — This bit allows the BIOS or OS to enable the generation of an interrupt when FORCEPR# has been asserted by another agent on the platform. Bit 3 = 0 disables the interrupt; bit 3 = 1 enables the interrupt.
- **Critical Temperature Interrupt Enable (bit 4, R/W)** — Enables the generation of an interrupt when the Critical Temperature Detector has detected a critical thermal condition. The recommended response to this condition is a system shutdown. Bit 4 = 0 disables the interrupt; bit 4 = 1 enables the interrupt.
- **Threshold #1 Value (bits 14:8, R/W)** — A temperature threshold, encoded relative to the TCC Activation temperature (using the same format as the Digital Readout). This threshold is compared against the Digital Readout and is used to generate the Thermal Threshold #1 Status and Log bits as well as the Threshold #1 thermal interrupt delivery.
- **Threshold #1 Interrupt Enable (bit 15, R/W)** — Enables the generation of an interrupt when the actual temperature crosses the Threshold #1 setting in any direction. Bit 15 = 1 enables the interrupt; bit 15 = 0 disables the interrupt.
- **Threshold #2 Value (bits 22:16, R/W)** —A temperature threshold, encoded relative to the TCC Activation temperature (using the same format as the Digital Readout). This threshold is compared against the Digital Readout and is used to generate the Thermal Threshold #2 Status and Log bits as well as the Threshold #2 thermal interrupt delivery.
- **Threshold #2 Interrupt Enable (bit 23, R/W)** — Enables the generation of an interrupt when the actual temperature crosses the Threshold #2 setting in any direction. Bit 23 = 1enables the interrupt; bit 23 = 0 disables the interrupt.
- **Power Limit Notification Enable (bit 24, R/W)** — Enables the generation of power notification events when the processor went below OS-requested P-state or OS-requested clock modulation duty cycle. This field is supported only if CPUID.06H:EAX[bit 4] = 1. Package level power limit notification can be enabled independently by IA32_PACKAGE_THERM_INTERRUPT MSR.

15.8.6 Power Limit Notification

Platform firmware may be capable of specifying a power limit to restrict power delivered to a platform component, such as a physical processor package. This constraint imposed by platform firmware may occasionally cause the processor to operate below OS-requested P or T-state. A power limit notification event can be delivered using the existing thermal LVT entry in the local APIC.

Software can enumerate the presence of the processor's support for power limit notification by verifying CPUID.06H:EAX[bit 4] = 1.

If CPUID.06H:EAX[bit 4] = 1, then IA32_THERM_INTERRUPT and IA32_THERM_STATUS provides the following facility to manage power limit notification:

- Bits 10 and 11 in IA32_THERM_STATUS informs software of the occurrence of processor operating below OS-requested P-state or clock modulation duty cycle setting (see Figure 15-31).
- Bit 24 in IA32_THERM_INTERRUPT enables the local APIC to deliver a thermal event when the processor went below OS-requested P-state or clock modulation duty cycle setting (see Figure 15-32).

15.9 PACKAGE LEVEL THERMAL MANAGEMENT

The thermal management facilities like IA32_THERM_INTERRUPT and IA32_THERM_STATUS are often implemented with a processor core granularity. To facilitate software manage thermal events from a package level granularity, two architectural MSR is provided for package level thermal management. The IA32_PACKAGE_THERM_STATUS and IA32_PACKAGE_THERM_INTERRUPT MSRs use similar interfaces as IA32_THERM_STATUS and IA32_THERM_INTERRUPT, but are shared in each physical processor package.

Software can enumerate the presence of the processor's support for package level thermal management facility (IA32_PACKAGE_THERM_STATUS and IA32_PACKAGE_THERM_INTERRUPT) by verifying CPUID.06H:EAX[bit 6] = 1.

The layout of IA32_PACKAGE_THERM_STATUS MSR is shown in Figure 15-33.

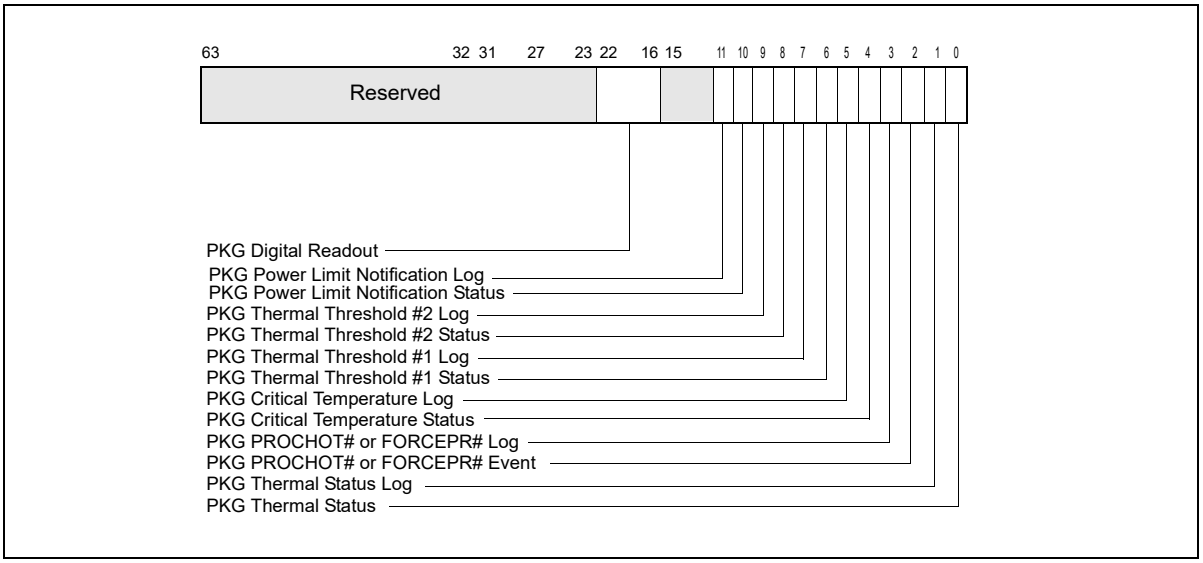

Figure 15-33. IA32_PACKAGE_THERM_STATUS Register

- **Package Thermal Status (bit 0, RO)** — This bit indicates whether the digital thermal sensor high-temperature output signal (PROCHOT#) for the package is currently active. Bit 0 = 1 indicates the feature is active. This bit may not be written by software; it reflects the state of the digital thermal sensor.

- **Package Thermal Status Log (bit 1, R/WC0)** — This is a sticky bit that indicates the history of the thermal sensor high temperature output signal (PROCHOT#) of the package. Bit 1 = 1 if package PROCHOT# has been asserted since a previous RESET or the last time software cleared the bit. Software may clear this bit by writing a zero.
- **Package PROCHOT# Event (bit 2, RO)** — Indicates whether package PROCHOT# is being asserted by another agent on the platform.
- **Package PROCHOT# Log (bit 3, R/WC0)** — Sticky bit that indicates whether package PROCHOT# has been asserted by another agent on the platform since the last clearing of this bit or a reset. If bit 3 = 1, package PROCHOT# has been externally asserted. Software may clear this bit by writing a zero.
- **Package Critical Temperature Status (bit 4, RO)** — Indicates whether the package critical temperature detector output signal is currently active. If bit 4 = 1, the package critical temperature detector output signal is currently active.
- **Package Critical Temperature Log (bit 5, R/WC0)** — Sticky bit that indicates whether the package critical temperature detector output signal has been asserted since the last clearing of this bit or reset. If bit 5 = 1, the output signal has been asserted. Software may clear this bit by writing a zero.
- **Package Thermal Threshold #1 Status (bit 6, RO)** — Indicates whether the actual package temperature is currently higher than or equal to the value set in Package Thermal Threshold #1. If bit 6 = 0, the actual temperature is lower. If bit 6 = 1, the actual temperature is greater than or equal to PTT#1. Quantitative information of actual package temperature can be inferred from Package Digital Readout, bits 22:16.
- **Package Thermal Threshold #1 Log (bit 7, R/WC0)** — Sticky bit that indicates whether the Package Thermal Threshold #1 has been reached since the last clearing of this bit or a reset. If bit 7 = 1, the Package Threshold #1 has been reached. Software may clear this bit by writing a zero.
- **Package Thermal Threshold #2 Status (bit 8, RO)** — Indicates whether actual package temperature is currently higher than or equal to the value set in Package Thermal Threshold #2. If bit 8 = 0, the actual temperature is lower. If bit 8 = 1, the actual temperature is greater than or equal to PTT#2. Quantitative information of actual temperature can be inferred from Package Digital Readout, bits 22:16.
- **Package Thermal Threshold #2 Log (bit 9, R/WC0)** — Sticky bit that indicates whether the Package Thermal Threshold #2 has been reached since the last clearing of this bit or a reset. If bit 9 = 1, the Package Thermal Threshold #2 has been reached. Software may clear this bit by writing a zero.
- **Package Power Limitation Status (bit 10, RO)** — Indicates package power limit is forcing one ore more processors to operate below OS-requested P-state. Note that package power limit violation may be caused by processor cores or by devices residing in the uncore. Software can examine IA32_THERM_STATUS to determine if the cause originates from a processor core (see Figure 15-31).
- **Package Power Notification Log (bit 11, R/WCO)** — Sticky bit that indicates any processor in the package went below OS-requested P-state or OS-requested clock modulation duty cycle since the last clearing of this or RESET.
- **Package Digital Readout (bits 22:16, RO)** — Package digital temperature reading in 1 degree Celsius relative to the package TCC activation temperature.

  0: Package TCC Activation temperature,

  1: (PTCC Activation - 1) , etc. See the processor's data sheet for details regarding PTCC activation.

  A lower reading in the Package Digital Readout field (bits 22:16) indicates a higher actual temperature.

The layout of IA32_PACKAGE_THERM_INTERRUPT MSR is shown in Figure 15-34.

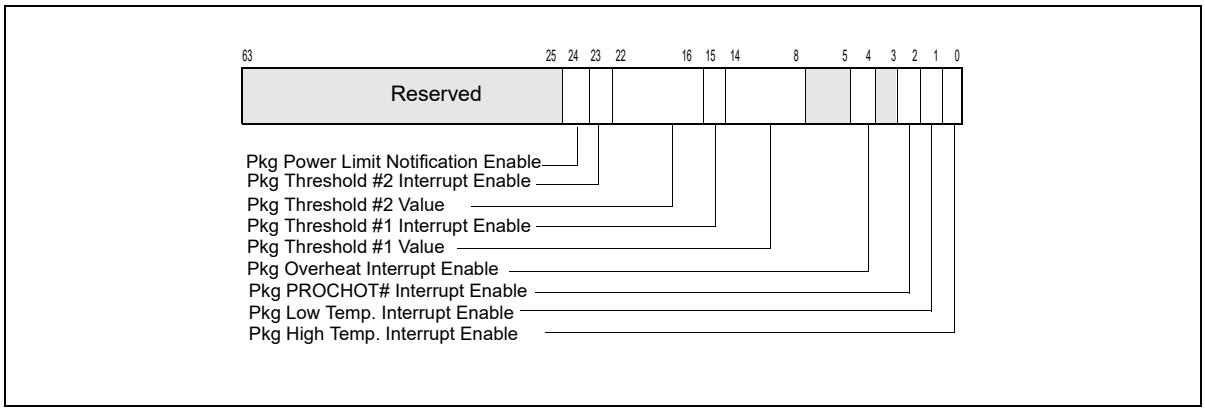

Figure 15-34. IA32_PACKAGE_THERM_INTERRUPT Register

- **Package High-Temperature Interrupt Enable (bit 0, R/W)** — This bit allows the BIOS to enable the generation of an interrupt on the transition from low-temperature to a package high-temperature threshold. Bit 0 = 0 (default) disables interrupts; bit 0 = 1 enables interrupts.
- **Package Low-Temperature Interrupt Enable (bit 1, R/W)** — This bit allows the BIOS to enable the generation of an interrupt on the transition from high-temperature to a low-temperature (TCC de-activation). Bit 1 = 0 (default) disables interrupts; bit 1 = 1 enables interrupts.
- **Package PROCHOT# Interrupt Enable (bit 2, R/W)** — This bit allows the BIOS or OS to enable the generation of an interrupt when Package PROCHOT# has been asserted by another agent on the platform and the Bidirectional Prochot feature is enabled. Bit 2 = 0 disables the interrupt; bit 2 = 1 enables the interrupt.
- **Package Critical Temperature Interrupt Enable (bit 4, R/W)** — Enables the generation of an interrupt when the Package Critical Temperature Detector has detected a critical thermal condition. The recommended response to this condition is a system shutdown. Bit 4 = 0 disables the interrupt; bit 4 = 1 enables the interrupt.
- **Package Threshold #1 Value (bits 14:8, R/W)** — A temperature threshold, encoded relative to the Package TCC Activation temperature (using the same format as the Digital Readout). This threshold is compared against the Package Digital Readout and is used to generate the Package Thermal Threshold #1 Status and Log bits as well as the Package Threshold #1 thermal interrupt delivery.
- **Package Threshold #1 Interrupt Enable (bit 15, R/W)** — Enables the generation of an interrupt when the actual temperature crosses the Package Threshold #1 setting in any direction. Bit 15 = 1 enables the interrupt; bit 15 = 0 disables the interrupt.
- **Package Threshold #2 Value (bits 22:16, R/W)** —A temperature threshold, encoded relative to the PTCC Activation temperature (using the same format as the Package Digital Readout). This threshold is compared against the Package Digital Readout and is used to generate the Package Thermal Threshold #2 Status and Log bits as well as the Package Threshold #2 thermal interrupt delivery.
- **Package Threshold #2 Interrupt Enable (bit 23, R/W)** — Enables the generation of an interrupt when the actual temperature crosses the Package Threshold #2 setting in any direction. Bit 23 = 1 enables the interrupt; bit 23 = 0 disables the interrupt.
- **Package Power Limit Notification Enable (bit 24, R/W)** — Enables the generation of package power notification events.

15.9.1 Support for Passive and Active cooling

Passive and active cooling may be controlled by the OS power management agent through ACPI control methods. On platforms providing package level thermal management facility described in the previous section, it is recommended that active cooling (FAN control) should be driven by measuring the package temperature using the IA32_PACKAGE_THERM_INTERRUPT MSR.

Passive cooling (frequency throttling) should be driven by measuring (a) the core and package temperatures, or (b) only the package temperature. If measured package temperature led the power management agent to choose which core to execute passive cooling, then all cores need to execute passive cooling. Core temperature is measured using the IA32_THERMAL_STATUS and IA32_THERMAL_INTERRUPT MSRs. The exact implementation details depend on the platform firmware and possible solutions include defining two different thermal zones (one for core temperature and passive cooling and the other for package temperature and active cooling).

15.10 PLATFORM SPECIFIC POWER MANAGEMENT SUPPORT

This section covers power management interfaces that are not architectural but addresses the power management needs of several platform specific components. Specifically, RAPL (Running Average Power Limit) interfaces provide mechanisms to enforce power consumption limit. Power limiting usages have specific usages in client and server platforms.

For client platform power limit control and for server platforms used in a data center, the following power and thermal related usages are desirable:

- Platform Thermal Management: Robust mechanisms to manage component, platform, and group-level thermals, either proactively or reactively (e.g., in response to a platform-level thermal trip point).
- Platform Power Limiting: More deterministic control over the system's power consumption, for example to meet battery life targets on rack-level or container-level power consumption goals within a datacenter.
- Power/Performance Budgeting: Efficient means to control the power consumed (and therefore the sustained performance delivered) within and across platforms.

The server and client usage models are addressed by RAPL interfaces, which expose multiple domains of power rationing within each processor socket. Generally, these RAPL domains may be viewed to include hierarchically:

- Package domain is the processor die.
- Memory domain includes the directly-attached DRAM; an additional power plane may constitute a separate domain.

In order to manage the power consumed across multiple sockets via RAPL, individual limits must be programmed for each processor complex. Programming specific RAPL domain across multiple sockets is not supported.

15.10.1 RAPL Interfaces

RAPL interfaces consist of non-architectural MSRs. Each RAPL domain supports the following set of capabilities, some of which are optional as stated below.

- Power limit - MSR interfaces to specify power limit, time window; lock bit, clamp bit etc.
- Energy Status - Power metering interface providing energy consumption information.
- Perf Status (Optional) - Interface providing information on the performance effects (regression) due to power limits. It is defined as a duration metric that measures the power limit effect in the respective domain. The meaning of duration is domain specific.
- Power Info (Optional) - Interface providing information on the range of parameters for a given domain, minimum power, maximum power etc.
- Policy (Optional) - 4-bit priority information that is a hint to hardware for dividing budget between sub-domains in a parent domain.

Each of the above capabilities requires specific units in order to describe them. Power is expressed in Watts, Time is expressed in Seconds, and Energy is expressed in Joules. Scaling factors are supplied to each unit to make the information presented meaningful in a finite number of bits. Units for power, energy, and time are exposed in the read-only MSR_RAPL_POWER_UNIT MSR.

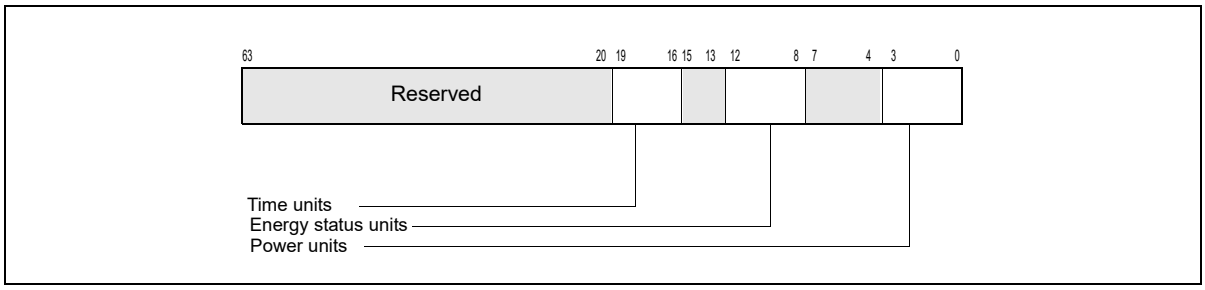

Figure 15-35. MSR_RAPL_POWER_UNIT Register

MSR_RAPL_POWER_UNIT (Figure 15-35) provides the following information across all RAPL domains:

- **Power Units** (bits 3:0): Power related information (in Watts) is based on the multiplier, 1/ 2^PU; where PU is an unsigned integer represented by bits 3:0. Default value is 0011b, indicating power unit is in 1/8 Watts increment.
- **Energy Status Units** (bits 12:8): Energy related information (in Joules) is based on the multiplier, 1/2^ESU; where ESU is an unsigned integer represented by bits 12:8. Default value is 10000b, indicating energy status unit is in 15.3 micro-Joules increment.
- **Time Units** (bits 19:16): Time related information (in Seconds) is based on the multiplier, 1/ 2^TU; where TU is an unsigned integer represented by bits 19:16. Default value is 1010b, indicating time unit is in 976 micro-seconds increment.

15.10.2 RAPL Domains and Platform Specificity

The specific RAPL domains available in a platform vary across product segments. Platforms targeting the client segment support the following RAPL domain hierarchy:

- Package
- Two power planes: PP0 and PP1 (PP1 may reflect to uncore devices)

Platforms targeting the server segment support the following RAPL domain hierarchy:

- Package
- Power plane: PP0
- DRAM

Each level of the RAPL hierarchy provides a respective set of RAPL interface MSRs. Table 15-12 lists the RAPL MSR interfaces available for each RAPL domain. The power limit MSR of each RAPL domain is located at offset 0 relative to an MSR base address which is non-architectural (see Chapter 2, "Model-Specific Registers (MSRs)" in the *Intel® 64 and IA-32 Architectures Software Developer's Manual, Volume 4*). The energy status MSR of each domain is located at offset 1 relative to the MSR base address of respective domain.

Table 15-12. RAPL MSR Interfaces and RAPL Domains

Domain	Power Limit (Offset 0)	Energy Status (Offset 1)	Policy (Offset 2)	Perf Status (Offset 3)	Power Info (Offset 4)
PKG	MSR_PKG_POWER_LIMIT	MSR_PKG_ENERGY_STATUS	RESERVED	MSR_PKG_PERF_STATUS	MSR_PKG_POWER_INFO
DRAM	MSR_DRAM_POWER_LIMIT	MSR_DRAM_ENERGY_STATUS	RESERVED	MSR_DRAM_PERF_STATUS	MSR_DRAM_POWER_INFO
PP0	MSR_PP0_POWER_LIMIT	MSR_PP0_ENERGY_STATUS	MSR_PP0_POLICY	MSR_PP0_PERF_STATUS	RESERVED
PP1	MSR_PP1_POWER_LIMIT	MSR_PP1_ENERGY_STATUS	MSR_PP1_POLICY	RESERVED	RESERVED

The presence of the optional MSR interfaces (the three right-most columns of Table 15-12) may be model-specific. See Chapter 2, "Model-Specific Registers (MSRs)" in the *Intel® 64 and IA-32 Architectures Software Developer's Manual, Volume 4* for details.

15.10.3 Package RAPL Domain

The MSR interfaces defined for the package RAPL domain are:

- MSR_PKG_POWER_LIMIT allows software to set power limits for the package and measurement attributes associated with each limit,
- MSR_PKG_ENERGY_STATUS reports measured actual energy usage,
- MSR_PKG_POWER_INFO reports the package power range information for RAPL usage.

MSR_PKG_PERF_STATUS can report the performance impact of power limiting, but its availability may be model-specific.

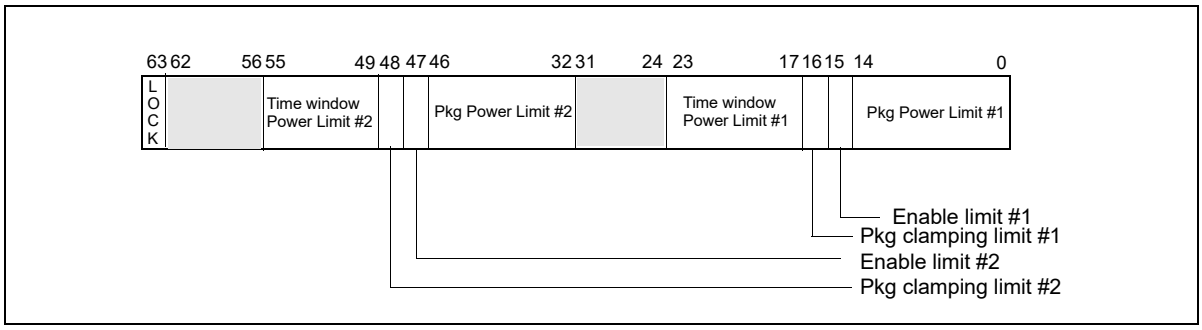

Figure 15-36. MSR_PKG_POWER_LIMIT Register

MSR_PKG_POWER_LIMIT allows a software agent to define power limitation for the package domain. Power limitation is defined in terms of average power usage (Watts) over a time window specified in MSR_PKG_POWER_LIMIT. Two power limits can be specified, corresponding to time windows of different sizes. Each power limit provides independent clamping control that would permit the processor cores to go below OS-requested state to meet the power limits. A lock mechanism allow the software agent to enforce power limit settings. Once the lock bit is set, the power limit settings are static and un-modifiable until next RESET.

The bit fields of MSR_PKG_POWER_LIMIT (Figure 15-36) are:

- **Package Power Limit #1**(bits 14:0): Sets the average power usage limit of the package domain corresponding to time window # 1. The unit of this field is specified by the "Power Units" field of MSR_RAPL_POWER_UNIT.

- **Enable Power Limit #1**(bit 15): 0 = disabled; 1 = enabled.
- **Package Clamping Limitation #1** (bit 16): Allow going below OS-requested P/T state setting during time window specified by bits 23:17.
- **Time Window for Power Limit #1** (bits 23:17): Indicates the time window for power limit #1

  Time limit = 2^Y * (1.0 + Z/4.0) * Time_Unit

  Here "Y" is the unsigned integer value represented. by bits 21:17, "Z" is an unsigned integer represented by bits 23:22. "Time_Unit" is specified by the "Time Units" field of MSR_RAPL_POWER_UNIT.
- **Package Power Limit #2**(bits 46:32): Sets the average power usage limit of the package domain corresponding to time window # 2. The unit of this field is specified by the "Power Units" field of MSR_RAPL_POWER_UNIT.
- **Enable Power Limit #2**(bit 47): 0 = disabled; 1 = enabled.
- **Package Clamping Limitation #2** (bit 48): Allow going below OS-requested P/T state setting during time window specified by bits 23:17.
- **Time Window for Power Limit #2** (bits 55:49): Indicates the time window for power limit #2

  Time limit = 2^Y * (1.0 + Z/4.0) * Time_Unit

  Here "Y" is the unsigned integer value represented. by bits 53:49, "Z" is an unsigned integer represented by bits 55:54. "Time_Unit" is specified by the "Time Units" field of MSR_RAPL_POWER_UNIT. This field may have a hard-coded value in hardware and ignores values written by software.
- **Lock** (bit 63): If set, all write attempts to this MSR are ignored until next RESET.

MSR_PKG_ENERGY_STATUS is a read-only MSR. It reports the actual energy use for the package domain. This MSR is updated every ~1msec. It has a wraparound time of around 60 secs when power consumption is high, and may be longer otherwise.

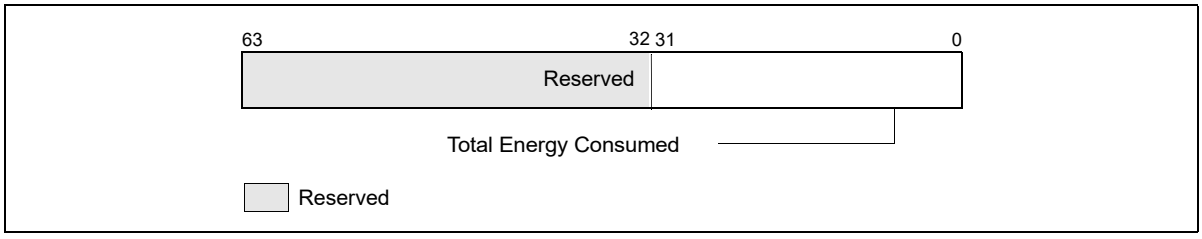

Figure 15-37. MSR_PKG_ENERGY_STATUS MSR

- **Total Energy Consumed** (bits 31:0): The unsigned integer value represents the total amount of energy consumed since that last time this register is cleared. The unit of this field is specified by the "Energy Status Units" field of MSR_RAPL_POWER_UNIT.

MSR_PKG_POWER_INFO is a read-only MSR. It reports the package power range information for RAPL usage. This MSR provides maximum/minimum values (derived from electrical specification), thermal specification power of the package domain. It also provides the largest possible time window for software to program the RAPL interface.

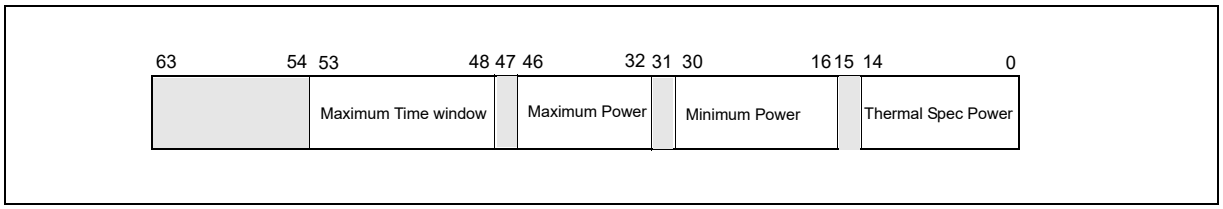

Figure 15-38. MSR_PKG_POWER_INFO Register

- **Thermal Spec Power** (bits 14:0): The unsigned integer value is the equivalent of thermal specification power of the package domain. The unit of this field is specified by the "Power Units" field of MSR_RAPL_POWER_UNIT.

- **Minimum Power** (bits 30:16): The unsigned integer value is the equivalent of minimum power derived from electrical spec of the package domain. The unit of this field is specified by the "Power Units" field of MSR_RAPL_POWER_UNIT.
- **Maximum Power** (bits 46:32): The unsigned integer value is the equivalent of maximum power derived from the electrical spec of the package domain. The unit of this field is specified by the "Power Units" field of MSR_RAPL_POWER_UNIT.
- **Maximum Time Window** (bits 53:48): The unsigned integer value is the equivalent of largest acceptable value to program the time window of MSR_PKG_POWER_LIMIT. The unit of this field is specified by the "Time Units" field of MSR_RAPL_POWER_UNIT.

MSR_PKG_PERF_STATUS is a read-only MSR. It reports the total time for which the package was throttled due to the RAPL power limits. Throttling in this context is defined as going below the OS-requested P-state or T-state. It has a wrap-around time of many hours. The availability of this MSR is platform specific (see Chapter 2, "Model-Specific Registers (MSRs)" in the *Intel® 64 and IA-32 Architectures Software Developer's Manual, Volume 4*).

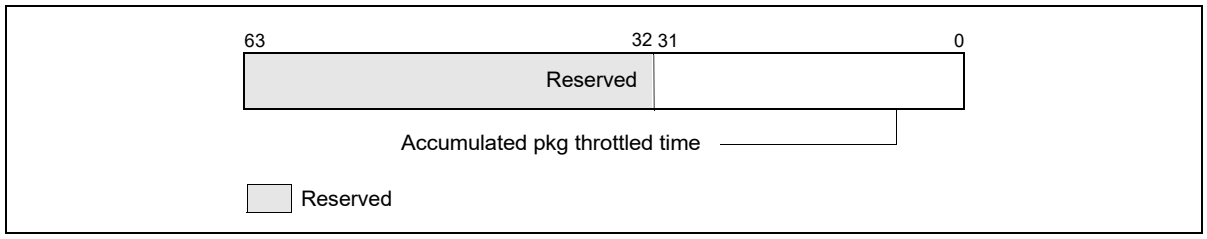

Figure 15-39. MSR_PKG_PERF_STATUS MSR

- **Accumulated Package Throttled Time** (bits 31:0): The unsigned integer value represents the cumulative time (since the last time this register is cleared) that the package has throttled. The unit of this field is specified by the "Time Units" field of MSR_RAPL_POWER_UNIT.

15.10.4 PP0/PP1 RAPL Domains

The MSR interfaces defined for the PP0 and PP1 domains are identical in layout. Generally, PP0 refers to the processor cores. The availability of PP1 RAPL domain interface is platform-specific. For a client platform, the PP1 domain refers to the power plane of a specific device in the uncore. For server platforms, the PP1 domain is not supported, but its PP0 domain supports the MSR_PP0_PERF_STATUS interface.

- MSR_PP0_POWER_LIMIT/MSR_PP1_POWER_LIMIT allow software to set power limits for the respective power plane domain.
- MSR_PP0_ENERGY_STATUS/MSR_PP1_ENERGY_STATUS report actual energy usage on a power plane.
- MSR_PP0_POLICY/MSR_PP1_POLICY allow software to adjust balance for respective power plane.

MSR_PP0_PERF_STATUS can report the performance impact of power limiting, but it is not available in client platforms.

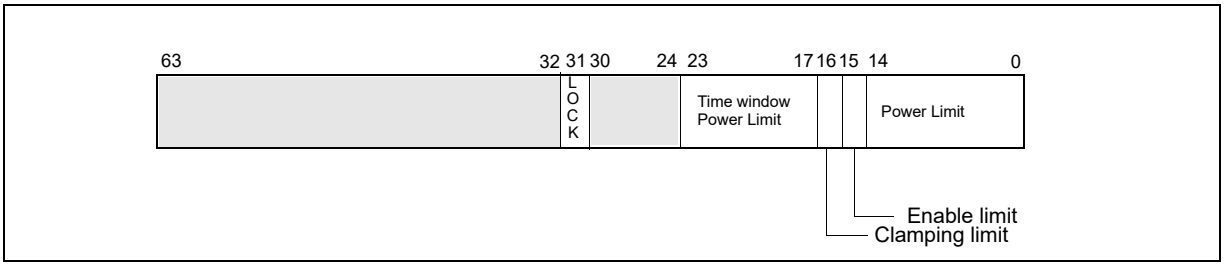

Figure 15-40. MSR_PP0_POWER_LIMIT/MSR_PP1_POWER_LIMIT Register

MSR_PP0_POWER_LIMIT/MSR_PP1_POWER_LIMIT allow a software agent to define power limitation for the respective power plane domain. A lock mechanism in each power plane domain allows the software agent to enforce power limit settings independently. Once a lock bit is set, the power limit settings in that power plane are static and un-modifiable until next RESET.

The bit fields of MSR_PP0_POWER_LIMIT/MSR_PP1_POWER_LIMIT (Figure 15-40) are:

- **Power Limit** (bits 14:0): Sets the average power usage limit of the respective power plane domain. The unit of this field is specified by the "Power Units" field of MSR_RAPL_POWER_UNIT.
- **Enable Power Limit** (bit 15): 0 = disabled; 1 = enabled.
- **Clamping Limitation** (bit 16): Allow going below OS-requested P/T state setting during time window specified by bits 23:17.
- **Time Window for Power Limit** (bits 23:17): Indicates the length of time window over which the power limit #1 will be used by the processor. The numeric value encoded by bits 23:17 is represented by the product of 2^Y *F; where F is a single-digit decimal floating-point value between 1.0 and 1.3 with the fraction digit represented by bits 23:22, Y is an unsigned integer represented by bits 21:17. The unit of this field is specified by the "Time Units" field of MSR_RAPL_POWER_UNIT.
- **Lock** (bit 31): If set, all write attempts to the MSR and corresponding policy MSR_PP0_POLICY/MSR_PP1_POLICY are ignored until next RESET.

MSR_PP0_ENERGY_STATUS/MSR_PP1_ENERGY_STATUS are read-only MSRs. They report the actual energy use for the respective power plane domains. These MSRs are updated every ~1msec.

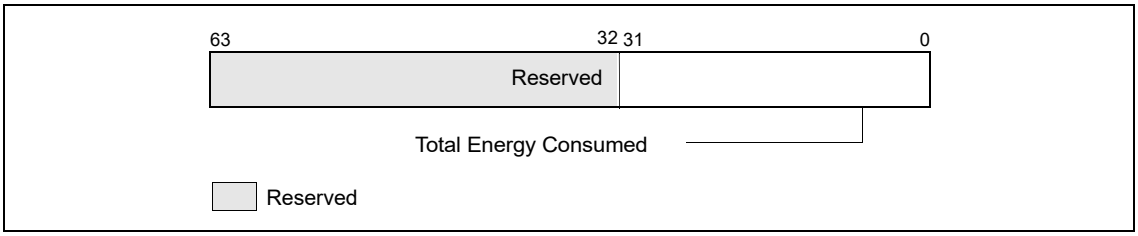

Figure 15-41. MSR_PP0_ENERGY_STATUS/MSR_PP1_ENERGY_STATUS MSR

- **Total Energy Consumed** (bits 31:0): The unsigned integer value represents the total amount of energy consumed since the last time this register was cleared. The unit of this field is specified by the "Energy Status Units" field of MSR_RAPL_POWER_UNIT.

MSR_PP0_POLICY/MSR_PP1_POLICY provide balance power policy control for each power plane by providing inputs to the power budgeting management algorithm. On platforms that support PP0 (IA cores) and PP1 (uncore graphic device), the default values give priority to the non-IA power plane. These MSRs enable the PCU to balance power consumption between the IA cores and uncore graphic device.

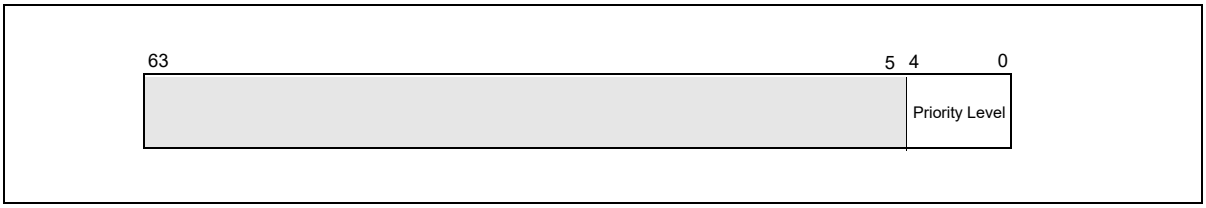

Figure 15-42. MSR_PP0_POLICY/MSR_PP1_POLICY Register

- **Priority Level** (bits 4:0): Priority level input to the PCU for respective power plane. PP0 covers the IA processor cores, PP1 covers the uncore graphic device. The value 31 is considered highest priority.

MSR_PP0_PERF_STATUS is a read-only MSR. It reports the total time for which the PP0 domain was throttled due to the power limits. This MSR is supported only in server platform. Throttling in this context is defined as going below the OS-requested P-state or T-state.

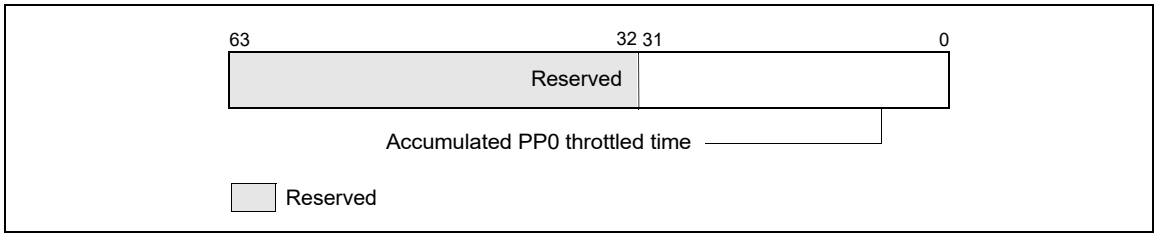

Figure 15-43. MSR_PP0_PERF_STATUS MSR

- **Accumulated PP0 Throttled Time** (bits 31:0): The unsigned integer value represents the cumulative time (since the last time this register is cleared) that the PP0 domain has throttled. The unit of this field is specified by the "Time Units" field of MSR_RAPL_POWER_UNIT.

15.10.5 DRAM RAPL Domain

The MSR interfaces defined for the DRAM domains are supported only in the server platform. The MSR interfaces are:

- MSR_DRAM_POWER_LIMIT allows software to set power limits for the DRAM domain and measurement attributes associated with each limit.
- MSR_DRAM_ENERGY_STATUS reports measured actual energy usage.
- MSR_DRAM_POWER_INFO reports the DRAM domain power range information for RAPL usage.
- MSR_DRAM_PERF_STATUS can report the performance impact of power limiting.

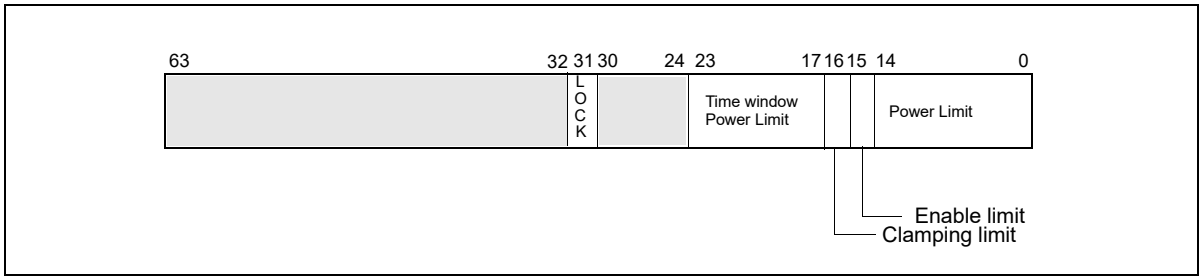

Figure 15-44. MSR_DRAM_POWER_LIMIT Register

MSR_DRAM_POWER_LIMIT allows a software agent to define power limitation for the DRAM domain. Power limitation is defined in terms of average power usage (Watts) over a time window specified in MSR_DRAM_POWER_LIMIT. A power limit can be specified along with a time window. A lock mechanism allow the software agent to enforce power limit settings. Once the lock bit is set, the power limit settings are static and unmodifiable until next RESET.

The bit fields of MSR_DRAM_POWER_LIMIT (Figure 15-44) are:

- **DRAM Power Limit #1**(bits 14:0): Sets the average power usage limit of the DRAM domain corresponding to time window # 1. The unit of this field is specified by the "Power Units" field of MSR_RAPL_POWER_UNIT.
- **Enable Power Limit #1**(bit 15): 0 = disabled; 1 = enabled.
- **Time Window for Power Limit** (bits 23:17): Indicates the length of time window over which the power limit will be used by the processor. The numeric value encoded by bits 23:17 is represented by the product of 2^Y *F; where F is a single-digit decimal floating-point value between 1.0 and 1.3 with the fraction digit represented by bits 23:22, Y is an unsigned integer represented by bits 21:17. The unit of this field is specified by the "Time Units" field of MSR_RAPL_POWER_UNIT.
- **Lock** (bit 31): If set, all write attempts to this MSR are ignored until next RESET.

MSR_DRAM_ENERGY_STATUS is a read-only MSR. It reports the actual energy use for the DRAM domain. This MSR is updated every ~1msec.

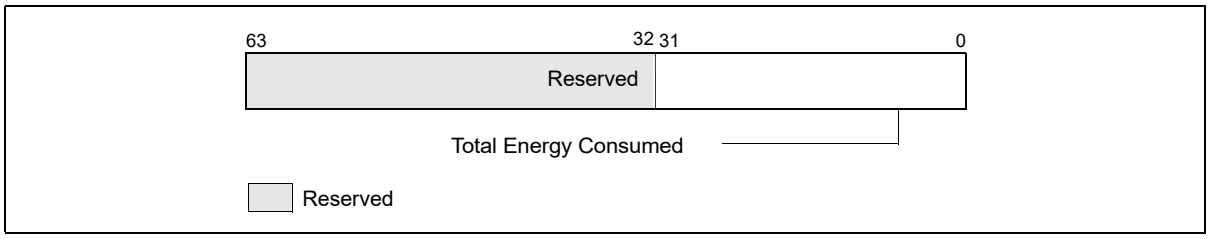

Figure 15-45. MSR_DRAM_ENERGY_STATUS MSR

- **Total Energy Consumed** (bits 31:0): The unsigned integer value represents the total amount of energy consumed since that last time this register is cleared. The unit of this field is specified by the "Energy Status Units" field of MSR_RAPL_POWER_UNIT.

MSR_DRAM_POWER_INFO is a read-only MSR. It reports the DRAM power range information for RAPL usage. This MSR provides maximum/minimum values (derived from electrical specification), thermal specification power of the DRAM domain. It also provides the largest possible time window for software to program the RAPL interface.

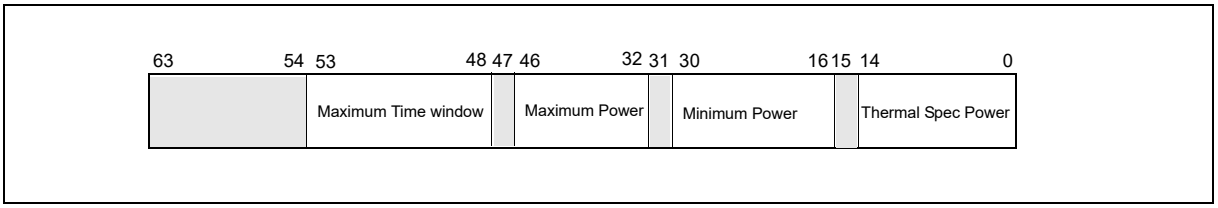

Figure 15-46. MSR_DRAM_POWER_INFO Register

- **Thermal Spec Power** (bits 14:0): The unsigned integer value is the equivalent of thermal specification power of the DRAM domain. The unit of this field is specified by the "Power Units" field of MSR_RAPL_POWER_UNIT.
- **Minimum Power** (bits 30:16): The unsigned integer value is the equivalent of minimum power derived from electrical spec of the DRAM domain. The unit of this field is specified by the "Power Units" field of MSR_RAPL_POWER_UNIT.
- **Maximum Power** (bits 46:32): The unsigned integer value is the equivalent of maximum power derived from the electrical spec of the DRAM domain. The unit of this field is specified by the "Power Units" field of MSR_RAPL_POWER_UNIT.
- **Maximum Time Window** (bits 53:48): The unsigned integer value is the equivalent of largest acceptable value to program the time window of MSR_DRAM_POWER_LIMIT. The unit of this field is specified by the "Time Units" field of MSR_RAPL_POWER_UNIT.

MSR_DRAM_PERF_STATUS is a read-only MSR. It reports the total time for which the package was throttled due to the RAPL power limits. Throttling in this context is defined as going below the OS-requested P-state or T-state. It has a wrap-around time of many hours. The availability of this MSR is platform specific (see Chapter 2, "Model-Specific Registers (MSRs)" in the *Intel® 64 and IA-32 Architectures Software Developer's Manual, Volume 4*).

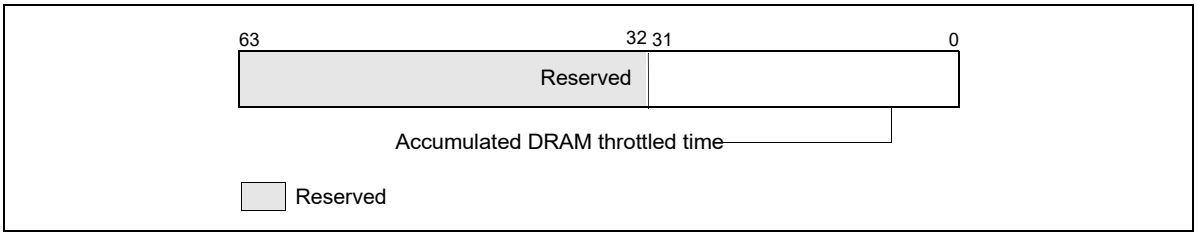

Figure 15-47. MSR_DRAM_PERF_STATUS MSR

- **Accumulated Package Throttled Time** (bits 31:0): The unsigned integer value represents the cumulative time (since the last time this register is cleared) that the DRAM domain has throttled. The unit of this field is specified by the “Time Units” field of MSR_RAPL_POWER_UNIT.

CHAPTER 16
MACHINE-CHECK ARCHITECTURE

This chapter describes the machine-check architecture and machine-check exception mechanism found in the Pentium 4, Intel Xeon, Intel Atom, and P6 family processors. See Chapter 6, "Interrupt 18—Machine-Check Exception (#MC)," for more information on machine-check exceptions. A brief description of the Pentium processor's machine check capability is also given.

Additionally, a signaling mechanism for software to respond to hardware corrected machine check error is covered.

16.1 MACHINE-CHECK ARCHITECTURE

The Pentium 4, Intel Xeon, Intel Atom, and P6 family processors implement a machine-check architecture that provides a mechanism for detecting and reporting hardware (machine) errors, such as: system bus errors, ECC errors, parity errors, cache errors, and TLB errors. It consists of a set of model-specific registers (MSRs) that are used to set up machine checking and additional banks of MSRs used for recording errors that are detected.

The processor signals the detection of an uncorrected machine-check error by generating a machine-check exception (#MC), which is an abort class exception. The implementation of the machine-check architecture does not ordinarily permit the processor to be restarted reliably after generating a machine-check exception. However, the machine-check-exception handler can collect information about the machine-check error from the machine-check MSRs.

Starting with 45 nm Intel 64 processor on which CPUID reports DisplayFamily_DisplayModel as 06H_1AH (see CPUID instruction in Chapter 3, "Instruction Set Reference, A-L" in the *Intel® 64 and IA-32 Architectures Software Developer's Manual, Volume 2A*), the processor can report information on corrected machine-check errors and deliver a programmable interrupt for software to respond to MC errors, referred to as corrected machine-check error interrupt (CMCI). See Section 16.5 for detail.

Intel 64 processors supporting machine-check architecture and CMCI may also support an additional enhancement, namely, support for software recovery from certain uncorrected recoverable machine check errors. See Section 16.6 for detail.

16.2 COMPATIBILITY WITH PENTIUM PROCESSOR

The Pentium 4, Intel Xeon, Intel Atom, and P6 family processors support and extend the machine-check exception mechanism introduced in the Pentium processor. The Pentium processor reports the following machine-check errors:

- data parity errors during read cycles
- unsuccessful completion of a bus cycle

The above errors are reported using the P5_MC_TYPE and P5_MC_ADDR MSRs (implementation specific for the Pentium processor). Use the RDMSR instruction to read these MSRs. See Chapter 2, "Model-Specific Registers (MSRs)" in the *Intel® 64 and IA-32 Architectures Software Developer's Manual, Volume 4* for the addresses.

The machine-check error reporting mechanism that Pentium processors use is similar to that used in Pentium 4, Intel Xeon, Intel Atom, and P6 family processors. When an error is detected, it is recorded in P5_MC_TYPE and P5_MC_ADDR; the processor then generates a machine-check exception (#MC).

See Section 16.3.3, "Mapping of the Pentium Processor Machine-Check Errors to the Machine-Check Architecture," and Section 16.10.2, "Pentium Processor Machine-Check Exception Handling," for information on compatibility between machine-check code written to run on the Pentium processors and code written to run on P6 family processors.

16.3 MACHINE-CHECK MSRS

Machine check MSRs in the Pentium 4, Intel Atom, Intel Xeon, and P6 family processors consist of a set of global control and status registers and several error-reporting register banks. See Figure 16-1.

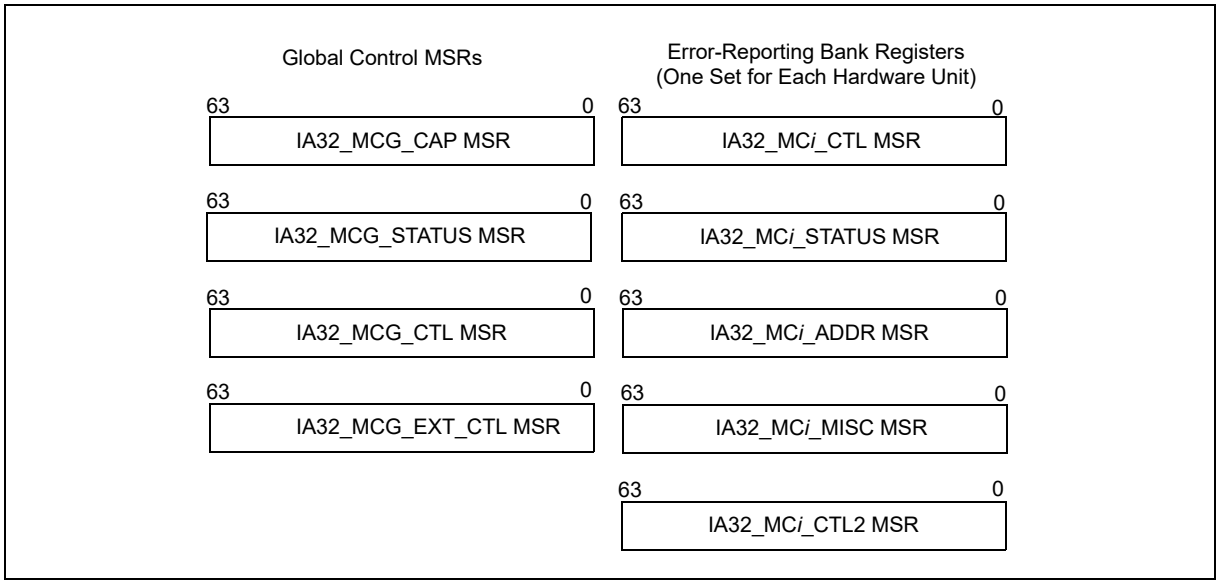

Figure 16-1. Machine-Check MSRs

Each error-reporting bank is associated with a specific hardware unit (or group of hardware units) in the processor. Use RDMSR and WRMSR to read and to write these registers.

16.3.1 Machine-Check Global Control MSRs

The machine-check global control MSRs include the IA32_MCG_CAP, IA32_MCG_STATUS, and optionally IA32_MCG_CTL and IA32_MCG_EXT_CTL. See Chapter 2, "Model-Specific Registers (MSRs)" in the *Intel® 64 and IA-32 Architectures Software Developer's Manual, Volume 4* for the addresses of these registers.

16.3.1.1 IA32_MCG_CAP MSR

The IA32_MCG_CAP MSR is a read-only register that provides information about the machine-check architecture of the processor. Figure 16-2 shows the layout of the register.

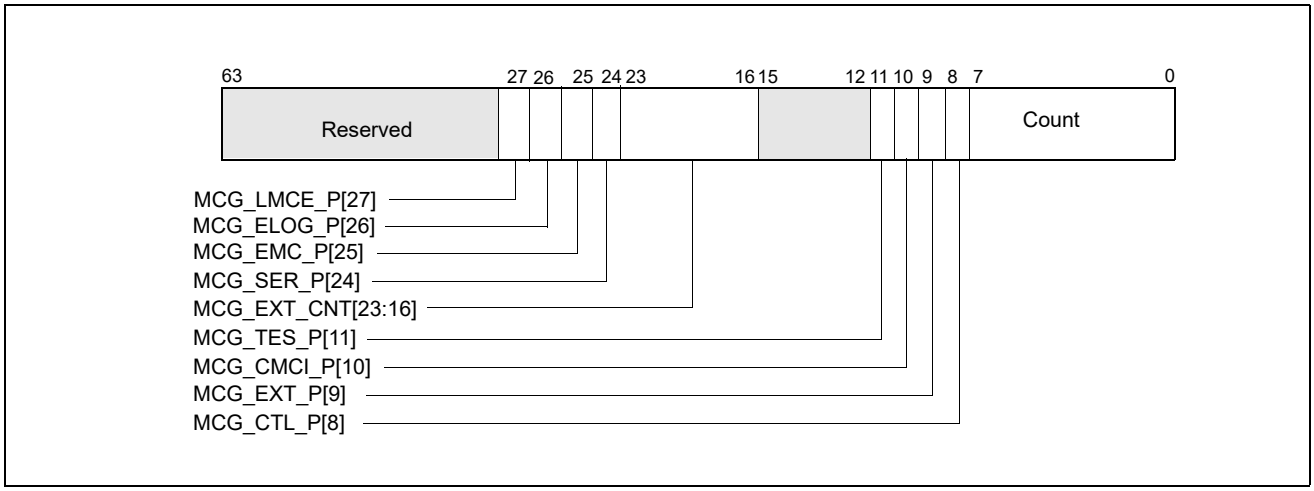

Figure 16-2. IA32_MCG_CAP Register

Where:

- **Count field, bits 7:0** — Indicates the number of hardware unit error-reporting banks available in a particular processor implementation.
- **MCG_CTL_P (control MSR present) flag, bit 8** — Indicates that the processor implements the IA32_MCG_CTL MSR when set; this register is absent when clear.
- **MCG_EXT_P (extended MSRs present) flag, bit 9** — Indicates that the processor implements the extended machine-check state registers found starting at MSR address 180H; these registers are absent when clear.
- **MCG_CMCI_P (Corrected MC error counting/signaling extension present) flag, bit 10** — Indicates (when set) that extended state and associated MSRs necessary to support the reporting of an interrupt on a corrected MC error event and/or count threshold of corrected MC errors, is present. When this bit is set, it does not imply this feature is supported across all banks. Software should check the availability of the necessary logic on a bank by bank basis when using this signaling capability (i.e., bit 30 settable in individual IA32_MCi_CTL2 register).
- **MCG_TES_P (threshold-based error status present) flag, bit 11** — Indicates (when set) that bits 56:53 of the IA32_MCi_STATUS MSR are part of the architectural space. Bits 56:55 are reserved, and bits 54:53 are used to report threshold-based error status. Note that when MCG_TES_P is not set, bits 56:53 of the IA32_MCi_STATUS MSR are model-specific.
- **MCG_EXT_CNT, bits 23:16** — Indicates the number of extended machine-check state registers present. This field is meaningful only when the MCG_EXT_P flag is set.
- **MCG_SER_P (software error recovery support present) flag, bit 24** — Indicates (when set) that the processor supports software error recovery (see Section 16.6), and IA32_MCi_STATUS MSR bits 56:55 are used to report the signaling of uncorrected recoverable errors and whether software must take recovery actions for uncorrected errors. Note that when MCG_TES_P is not set, bits 56:53 of the IA32_MCi_STATUS MSR are model-specific. If MCG_TES_P is set but MCG_SER_P is not set, bits 56:55 are reserved.
- **MCG_EMC_P (Enhanced Machine Check Capability) flag, bit 25** — Indicates (when set) that the processor supports enhanced machine check capabilities for firmware first signaling.
- **MCG_ELOG_P (extended error logging) flag, bit 26** — Indicates (when set) that the processor allows platform firmware to be invoked when an error is detected so that it may provide additional platform specific information in an ACPI format "Generic Error Data Entry" that augments the data included in machine check bank registers.

  For additional information about extended error logging interface, see https://cdrdv2.intel.com/v1/dl/getContent/671064.
- **MCG_LMCE_P (local machine check exception) flag, bit 27** — Indicates (when set) that the following interfaces are present:

— an extended state LMCE_S (located in bit 3 of IA32_MCG_STATUS), and

— the IA32_MCG_EXT_CTL MSR, necessary to support Local Machine Check Exception (LMCE).

A non-zero MCG_LMCE_P indicates that, when LMCE is enabled as described in Section 16.3.1.5, some machine check errors may be delivered to only a single logical processor.

The effect of writing to the IA32_MCG_CAP MSR is undefined.

16.3.1.2 IA32_MCG_STATUS MSR

The IA32_MCG_STATUS MSR describes the current state of the processor after a machine-check exception has occurred (see Figure 16-3).

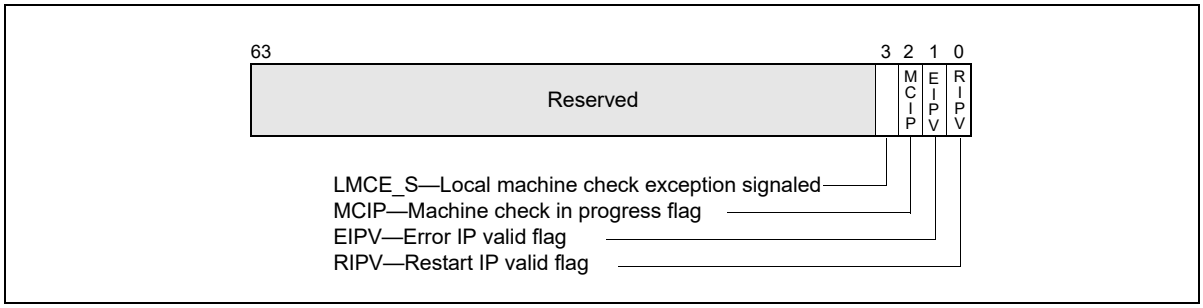

Figure 16-3. IA32_MCG_STATUS Register

Where:

- **RIPV (restart IP valid) flag, bit 0** — Indicates (when set) that program execution can be restarted reliably at the instruction pointed to by the instruction pointer pushed on the stack when the machine-check exception is generated. When clear, the program cannot be reliably restarted at the pushed instruction pointer.
- **EIPV (error IP valid) flag, bit 1** — Indicates (when set) that the instruction pointed to by the instruction pointer pushed onto the stack when the machine-check exception is generated is directly associated with the error. When this flag is cleared, the instruction pointed to may not be associated with the error.
- **MCIP (machine check in progress) flag, bit 2** — Indicates (when set) that a machine-check exception was generated. Software can set or clear this flag. The occurrence of a second Machine-Check Event while MCIP is set will cause the processor to enter a shutdown state. For information on processor behavior in the shutdown state, please refer to the description in Chapter 6, "Interrupt and Exception Handling": "Interrupt 8—Double Fault Exception (#DF)".
- **LMCE_S (local machine check exception signaled), bit 3** — Indicates (when set) that a local machine-check exception was generated. This indicates that the current machine-check event was delivered to only this logical processor.

Bits 63:04 in IA32_MCG_STATUS are reserved. An attempt to write to IA32_MCG_STATUS with any value other than 0 would result in #GP.

16.3.1.3 IA32_MCG_CTL MSR

The IA32_MCG_CTL MSR is present if the capability flag MCG_CTL_P is set in the IA32_MCG_CAP MSR.

IA32_MCG_CTL controls the reporting of machine-check exceptions. If present, writing 1s to this register enables machine-check features and writing all 0s disables machine-check features. All other values are undefined and/or implementation specific.

16.3.1.4 IA32_MCG_EXT_CTL MSR

The IA32_MCG_EXT_CTL MSR is present if the capability flag MCG_LMCE_P is set in the IA32_MCG_CAP MSR.

IA32_MCG_EXT_CTL.LMCE_EN (bit 0) allows the processor to signal some MCEs to only a single logical processor in the system.

If MCG_LMCE_P is not set in IA32_MCG_CAP, or platform software has not enabled LMCE by setting IA32_FEATURE_CONTROL.LMCE_ENABLED (bit 20), any attempt to write or read IA32_MCG_EXT_CTL will result in #GP.

The IA32_MCG_EXT_CTL MSR is cleared on RESET.

Figure 16-4 shows the layout of the IA32_MCG_EXT_CTL register

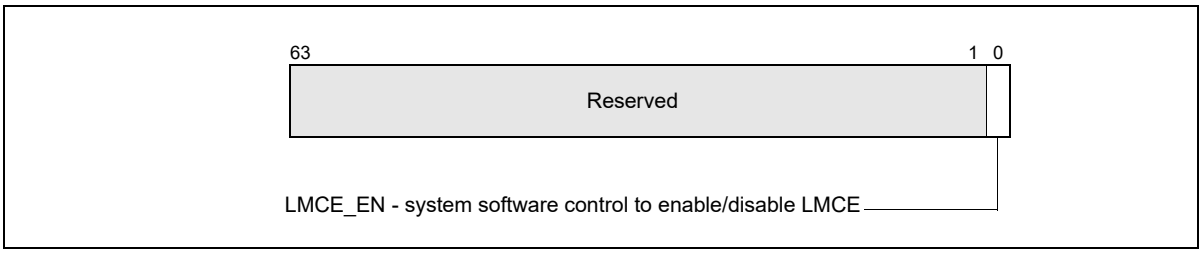

Figure 16-4. IA32_MCG_EXT_CTL Register

where

- **LMCE_EN (local machine check exception enable) flag, bit 0** - System software sets this to allow hardware to signal some MCEs to only a single logical processor. System software can set LMCE_EN only if the platform software has configured IA32_FEATURE_CONTROL as described in Section 16.3.1.5.

16.3.1.5 Enabling Local Machine Check

The intended usage of LMCE requires proper configuration by both platform software and system software. Platform software can turn LMCE on by setting bit 20 (LMCE_ENABLED) in IA32_FEATURE_CONTROL MSR (MSR address 3AH).

System software must ensure that both IA32_FEATURE_CONTROL.Lock (bit 0)and IA32_FEATURE_CONTROL.LMCE_ENABLED (bit 20) are set before attempting to set IA32_MCG_EXT_CTL.LMCE_EN (bit 0). When system software has enabled LMCE, then hardware will determine if a particular error can be delivered only to a single logical processor. Software should make no assumptions about the type of error that hardware can choose to deliver as LMCE. The severity and override rules stay the same as described in Table 16-8 to determine the recovery actions.

16.3.2 Error-Reporting Register Banks

Each error-reporting register bank can contain the IA32_MCi_CTL, IA32_MCi_STATUS, IA32_MCi_ADDR, and IA32_MCi_MISC MSRs. The number of reporting banks is indicated by bits [7:0] of IA32_MCG_CAP MSR (address 0179H). The first error-reporting register (IA32_MC0_CTL) always starts at address 400H.

See Chapter 2, "Model-Specific Registers (MSRs)" in the *Intel® 64 and IA-32 Architectures Software Developer's Manual, Volume 4* for addresses of the error-reporting registers in the Pentium 4, Intel Atom, and Intel Xeon processors; and for addresses of the error-reporting registers P6 family processors.

16.3.2.1 IA32_MCi_CTL MSRs

The IA32_MC*i*_CTL MSR controls signaling of #MC for errors produced by a particular hardware unit (or group of hardware units). Each of the 64 flags (EE*j*) represents a potential error. Setting an EE*j* flag enables signaling #MC of the associated error and clearing it disables signaling of the error. Error logging happens regardless of the setting of these bits. The processor drops writes to bits that are not implemented. Figure 16-5 shows the bit fields of IA32_MC*i*_CTL.

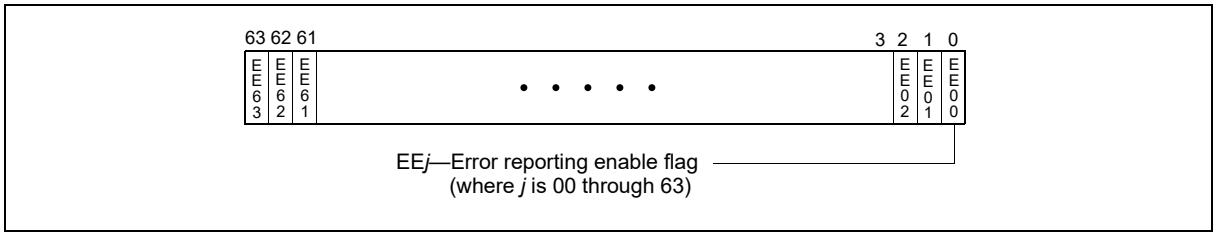

Figure 16-5. IA32_MC*i*_CTL Register

NOTE

For P6 family processors, processors based on Intel Core microarchitecture (excluding those on which CPUID reports DisplayFamily_DisplayModel as 06H_1AH and onward): the operating system or executive software must not modify the contents of the IA32_MC0_CTL MSR. This MSR is internally aliased to the EBL_CR_POWERON MSR and controls platform-specific error handling features. System specific firmware (the BIOS) is responsible for the appropriate initialization of the IA32_MC*i*_CTL MSR. P6 family processors only allow the writing of all 1s or all 0s to the IA32_MC*i*_CTL MSR.

16.3.2.2 IA32_MCi_STATUS MSRS

Each IA32_MCi_STATUS MSR contains information related to a machine-check error if its VAL (valid) flag is set (see Figure 16-6). Software is responsible for clearing IA32_MCi_STATUS MSRs by explicitly writing 0s to them; writing 1s to them causes a general-protection exception.

NOTE

Figure 16-6 depicts the IA32_MCi_STATUS MSR when IA32_MCG_CAP[24] = 1, IA32_MCG_CAP[11] = 1 and IA32_MCG_CAP[10] = 1. When IA32_MCG_CAP[24] = 0 and IA32_MCG_CAP[11] = 1, bits 56:55 is reserved and bits 54:53 for threshold-based error reporting. When IA32_MCG_CAP[11] = 0, bits 56:53 are part of the "Other Information" field. The use of bits 54:53 for threshold-based error reporting began with Intel Core Duo processors, and is currently used for cache memory. See Section 16.4, "Enhanced Cache Error reporting," for more information. When IA32_MCG_CAP[10] = 0, bits 52:38 are part of the "Other Information" field. The use of bits 52:38 for corrected MC error count is introduced with Intel 64 processor on which CPUID reports DisplayFamily_DisplayModel as 06H_1AH.

Where:

- **MCA (machine-check architecture) error code field, bits 15:0** — Specifies the machine-check architecture-defined error code for the machine-check error condition detected. The machine-check architecture-defined error codes are guaranteed to be the same for all IA-32 processors that implement the machine-check architecture. See Section 16.9, "Interpreting the MCA Error Codes," and Chapter 17, "Interpreting Machine-Check Error Codes", for information on machine-check error codes.
- **Model-specific error code field, bits 31:16** — Specifies the model-specific error code that uniquely identifies the machine-check error condition detected. The model-specific error codes may differ among IA-32 processors for the same machine-check error condition. See Chapter 17, "Interpreting Machine-Check Error Codes"for information on model-specific error codes.
- **Reserved, Error Status, and Other Information fields, bits 56:32** —
  - If IA32_MCG_CAP.MCG_EMC_P[bit 25] is 0, bits 37:32 contain "Other Information" that is implementation-specific and is not part of the machine-check architecture.
  - If IA32_MCG_CAP.MCG_EMC_P is 1, "Other Information" is in bits 36:32. If bit 37 is 0, system firmware has not changed the contents of IA32_MCi_STATUS. If bit 37 is 1, system firmware may have edited the contents of IA32_MCi_STATUS.
  - If IA32_MCG_CAP.MCG_CMCI_P[bit 10] is 0, bits 52:38 also contain "Other Information" (in the same sense as bits 37:32).

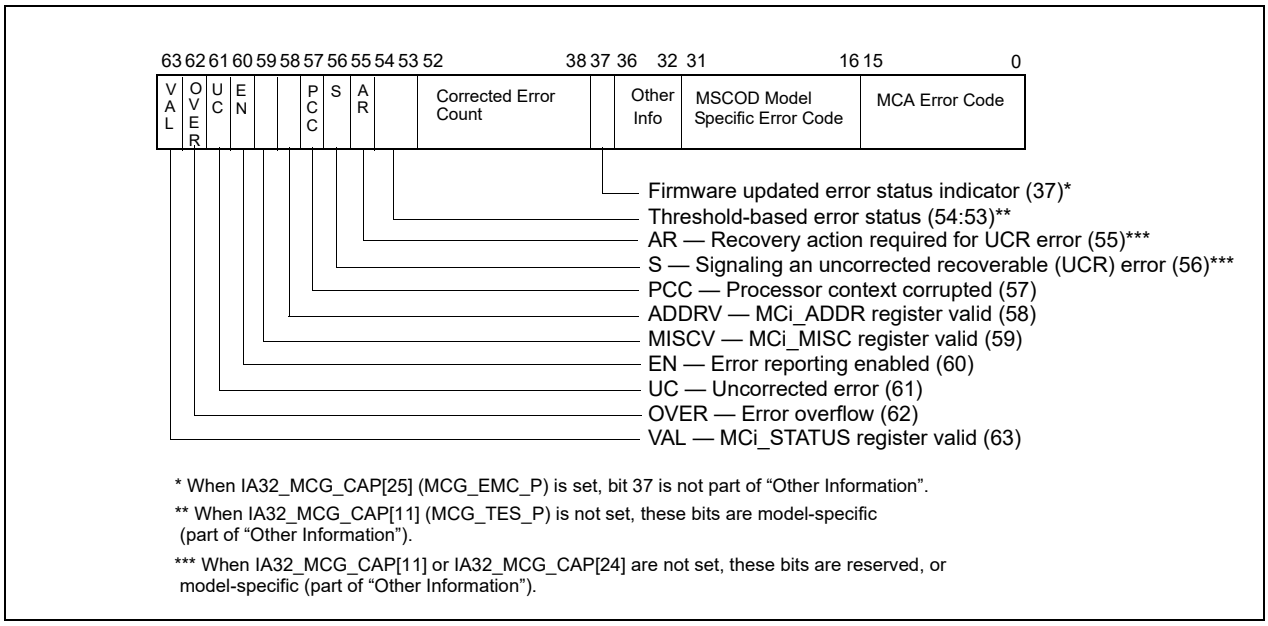

Figure 16-6. IA32_MC*i*_STATUS Register

- If IA32_MCG_CAP[10] is 1, bits 52:38 are architectural (not model-specific). In this case, bits 52:38 reports the value of a 15 bit counter that increments each time a corrected error is observed by the MCA recording bank. This count value will continue to increment until cleared by software. The most significant bit, 52, is a sticky count overflow bit.
- If IA32_MCG_CAP[11] is 0, bits 56:53 also contain "Other Information" (in the same sense).
- If IA32_MCG_CAP[11] is 1, bits 56:53 are architectural (not model-specific). In this case, bits 56:53 have the following functionality:
  - If IA32_MCG_CAP[24] is 0, bits 56:55 are reserved.
  - If IA32_MCG_CAP[24] is 1, bits 56:55 are defined as follows:
  - S (Signaling) flag, bit 56 - Signals the reporting of UCR errors in this MC bank. See Section 16.6.2 for additional detail.
  - AR (Action Required) flag, bit 55 - Indicates (when set) that MCA error code specific recovery action must be performed by system software at the time this error was signaled. See Section 16.6.2 for additional detail.
  - If the UC bit (Figure 16-6) is 1, bits 54:53 are undefined.
  - If the UC bit (Figure 16-6) is 0, bits 54:53 indicate the status of the hardware structure that reported the threshold-based error. See Table 16-1.

Table 16-1. Bits 54:53 in IA32_MCi_STATUS MSRs when IA32_MCG_CAP[11] = 1 and UC = 0

Bits 54:53	Meaning
00	**No tracking** - No hardware status tracking is provided for the structure reporting this event.
01	**Green** - Status tracking is provided for the structure posting the event; the current status is green (below threshold). For more information, see Section 16.4, "Enhanced Cache Error reporting".
10	**Yellow** - Status tracking is provided for the structure posting the event; the current status is yellow (above threshold). For more information, see Section 16.4, "Enhanced Cache Error reporting".
11	Reserved

- **PCC (processor context corrupt) flag, bit 57** — Indicates (when set) that the state of the processor might have been corrupted by the error condition detected and that reliable restarting of the processor may not be possible. When clear, this flag indicates that the error did not affect the processor's state, and software may be able to restart. When system software supports recovery, consult Section 16.10.4, "Machine-Check Software Handler Guidelines for Error Recovery" for additional rules that apply.
- **ADDRV (IA32_MC*i*_ADDR register valid) flag, bit 58** — Indicates (when set) that the IA32_MCi_ADDR register contains the address where the error occurred (see Section 16.3.2.3, "IA32_MCi_ADDR MSRs"). When clear, this flag indicates that the IA32_MCi_ADDR register is either not implemented or does not contain the address where the error occurred. Do not read these registers if they are not implemented in the processor.
- **MISCV (IA32_MC*i*_MISC register valid) flag, bit 59** — Indicates (when set) that the IA32_MC*i*_MISC register contains additional information regarding the error. When clear, this flag indicates that the IA32_MC*i*_MISC register is either not implemented or does not contain additional information regarding the error. Do not read these registers if they are not implemented in the processor.
- **EN (error enabled) flag, bit 60** — Indicates (when set) that the error was enabled by the associated EEj bit of the IA32_MC*i*_CTL register.
- **UC (error uncorrected) flag, bit 61** — Indicates (when set) that the processor did not or was not able to correct the error condition. When clear, this flag indicates that the processor was able to correct the error condition.
- **OVER (machine check overflow) flag, bit 62** — Indicates (when set) that a machine-check error occurred while the results of a previous error were still in the error-reporting register bank (that is, the VAL bit was already set in the IA32_MC*i*_STATUS register). The processor sets the OVER flag and software is responsible for clearing it. In general, enabled errors are written over disabled errors, and uncorrected errors are written over corrected errors. Uncorrected errors are not written over previous valid uncorrected errors. When MCG_CMCI_P is set, corrected errors may not set the OVER flag. Software can rely on corrected error count in IA32_MCi_Status[52:38] to determine if any additional corrected errors may have occurred. For more information, see Section 16.3.2.2.1, "Overwrite Rules for Machine Check Overflow".
- **VAL (IA32_MC*i*_STATUS register valid) flag, bit 63** — Indicates (when set) that the information within the IA32_MCi_STATUS register is valid. When this flag is set, the processor follows the rules given for the OVER flag in the IA32_MCi_STATUS register when overwriting previously valid entries. The processor sets the VAL flag and software is responsible for clearing it.

16.3.2.2.1 Overwrite Rules for Machine Check Overflow

Table 16-2 shows the overwrite rules for how to treat a second event if the cache has already posted an event to the MC bank – that is, what to do if the valid bit for an MC bank already is set to 1. When more than one structure posts events in a given bank, these rules specify whether a new event will overwrite a previous posting or not. These rules define a priority for uncorrected (highest priority), yellow, and green/unmonitored (lowest priority) status.

In Table 16-2, the values in the two left-most columns are IA32_MCi_STATUS[54:53].

Table 16-2. Overwrite Rules for Enabled Errors

First Event	Second Event	UC bit	Color	MCA Info
00/green	00/green	0	00/green	either
00/green	yellow	0	yellow	second error
yellow	00/green	0	yellow	first error
yellow	yellow	0	yellow	either
00/green/yellow	UC	1	undefined	second
UC	00/green/yellow	1	undefined	first

If a second event overwrites a previously posted event, the information (as guarded by individual valid bits) in the MCi bank is entirely from the second event. Similarly, if a first event is retained, all of the information previously posted for that event is retained. In general, when the logged error or the recent error is a corrected error, the OVER bit (MCi_Status[62]) may be set to indicate an overflow. When MCG_CMCI_P is set in IA32_MCG_CAP, system software should consult IA32_MCi_STATUS[52:38] to determine if additional corrected errors may have

occurred. Software may re-read IA32_MCi_STATUS, IA32_MCi_ADDR, and IA32_MCi_MISC appropriately to ensure data collected represent the last error logged.

After software polls a posting and clears the register, the valid bit is no longer set and therefore the meaning of the rest of the bits, including the yellow/green/00 status field in bits 54:53, is undefined. The yellow/green indication will only be posted for events associated with monitored structures – otherwise the unmonitored (00) code will be posted in IA32_MC*i*_STATUS[54:53].

16.3.2.3 IA32_MCi_ADDR MSRs

The IA32_MC*i*_ADDR MSR contains the address of the code or data memory location that produced the machine-check error if the ADDRV flag in the IA32_MC*i*_STATUS register is set (see Section 16-7, "IA32_MCi_ADDR MSR"). The IA32_MCi_ADDR register is either not implemented or contains no address if the ADDRV flag in the IA32_MCi_STATUS register is clear. When not implemented in the processor, all reads and writes to this MSR will cause a general protection exception.

The address returned is an offset into a segment, linear address, or physical address. This depends on the error encountered. When these registers are implemented, these registers can be cleared by explicitly writing 0s to these registers. Writing 1s to these registers will cause a general-protection exception. See Figure 16-7.

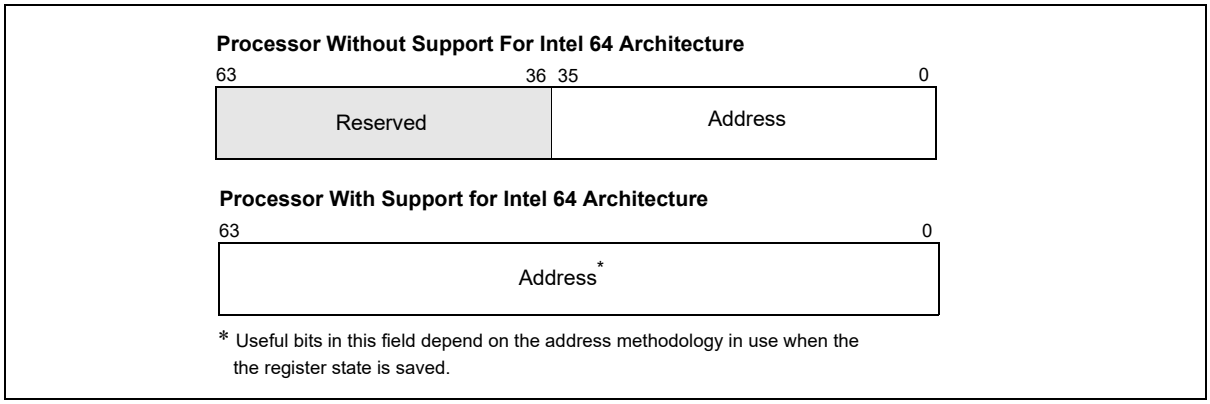

Figure 16-7. IA32_MC*i*_ADDR MSR

16.3.2.4 IA32_MCi_MISC MSRs

The IA32_MC*i*_MISC MSR contains additional information describing the machine-check error if the MISCV flag in the IA32_MC*i*_STATUS register is set. The IA32_MCi_MISC_MSR is either not implemented or does not contain additional information if the MISCV flag in the IA32_MCi_STATUS register is clear.

When not implemented in the processor, all reads and writes to this MSR will cause a general protection exception. When implemented in a processor, these registers can be cleared by explicitly writing all 0s to them; writing 1s to them causes a general-protection exception to be generated. This register is not implemented in any of the error-reporting register banks for the P6 or Intel Atom family processors.

If both MISCV and IA32_MCG_CAP[24] are set, the IA32_MCi_MISC_MSR is defined according to Figure 16-8 to support software recovery of uncorrected errors (see Section 16.6).

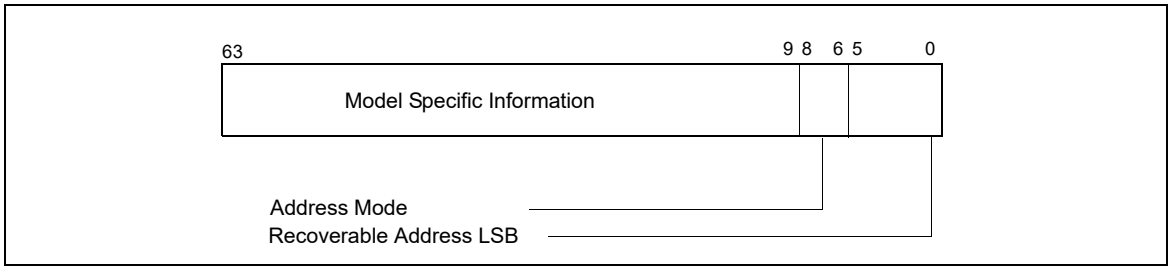

Figure 16-8. UCR Support in IA32_MCi_MISC Register

- Recoverable Address LSB (bits 5:0): The lowest valid recoverable address bit. Indicates the position of the least significant bit (LSB) of the recoverable error address. For example, if the processor logs bits [43:9] of the address, the LSB sub-field in IA32_MCi_MISC is 01001b (9 decimal). For this example, bits [8:0] of the recoverable error address in IA32_MCi_ADDR should be ignored.
- Address Mode (bits 8:6): Address mode for the address logged in IA32_MCi_ADDR. The supported address modes are given in Table 16-3.

Table 16-3. Address Mode in IA32_MCi_MISC[8:6]

IA32_MCi_MISC[8:6] Encoding	Definition
000	Segment Offset
001	Linear Address
010	Physical Address
011	Memory Address
100 to 110	Reserved
111	Generic

- Model Specific Information (bits 63:9): Not architecturally defined.

16.3.2.4.2 IOMCA

Logging and Signaling of errors from PCI Express domain is governed by PCI Express Advanced Error Reporting (AER) architecture. PCI Express architecture divides errors in two categories: Uncorrectable errors and Correctable errors. Uncorrectable errors can further be classified as Fatal or Non-Fatal. Uncorrected IO errors are signaled to the system software either as AER Message Signaled Interrupt (MSI) or via platform specific mechanisms such as NMI. Generally, the signaling mechanism is controlled by BIOS and/or platform firmware. Certain processors support an error handling mode, called IOMCA mode, where Uncorrected PCI Express errors are signaled in the form of machine check exception and logged in machine check banks.

When a processor is in this mode, Uncorrected PCI Express errors are logged in the MCACOD field of the IA32_MCi_STATUS register as Generic I/O error. The corresponding MCA error code is defined in Table 15-8. IA32_MCi_Status [15:0] Simple Error Code Encoding. Machine check logging complements and does not replace AER logging that occurs inside the PCI Express hierarchy. The PCI Express Root Complex and Endpoints continue to log the error in accordance with PCI Express AER mechanism. In IOMCA mode, MCi_MISC register in the bank that logged IOMCA can optionally contain information that link the Machine Check logs with the AER logs or proprietary logs. In such a scenario, the machine check handler can utilize the contents of MCi_MISC to locate the next level of error logs corresponding to the same error. Specifically, if MCi_Status.MISCV is 1 and MCACOD is 0x0E0B, MCi_MISC contains the PCI Express address of the Root Complex device containing the AER Logs. Software can consult the header type and class code registers in the Root Complex device's PCIe Configuration space to determine what type of device it is. This Root Complex device can either be a PCI Express Root Port, PCI Express Root Complex Event Collector or a proprietary device.

Errors that originate from PCI Express or Legacy Endpoints are logged in the corresponding Root Port in addition to the generating device. If MISCV=1 and MCi_MISC contains the address of the Root Port or a Root Complex Event collector, software can parse the AER logs to learn more about the error.

If MISCV=1 and MCi_MISC points to a device that is neither a Root Complex Event Collector not a Root Port, software must consult the Vendor ID/Device ID and use device specific knowledge to locate and interpret the error log registers. In some cases, the Root Complex device configuration space may not be accessible to the software and both the Vendor and Device ID read as 0xFFFF.

- The format of MCi_MISC for IOMCA errors is shown in Table 16-4.

Table 16-4. Address Mode in IA32_MCi_MISC[8:6]

63:40	39:32	31:16	15:9	8:6	5:0
RSVD	PCI Express Segment number	PCI Express Requestor ID	RSVD	ADDR MODE[1]	RECOV ADDR LSB[1]

NOTES:

1. Not Applicable if ADDRV=0.

Refer to PCI Express Specification 3.0 for definition of PCI Express Requestor ID and AER architecture. Refer to PCI Firmware Specification 3.0 for an explanation of PCI Ex-press Segment number and how software can access configuration space of a PCI Ex-press device given the segment number and Requestor ID.

16.3.2.5 IA32_MCi_CTL2 MSRs

The IA32_MC*i*_CTL2 MSR provides the programming interface to use corrected MC error signaling capability that is indicated by IA32_MCG_CAP[10] = 1. Software must check for the presence of IA32_MC*i*_CTL2 on a per-bank basis.

When IA32_MCG_CAP[10] = 1, the IA32_MCi_CTL2 MSR for each bank exists, i.e., reads and writes to these MSR are supported. However, signaling interface for corrected MC errors may not be supported in all banks.

The layout of IA32_MC*i*_CTL2 is shown in Figure 16-9:

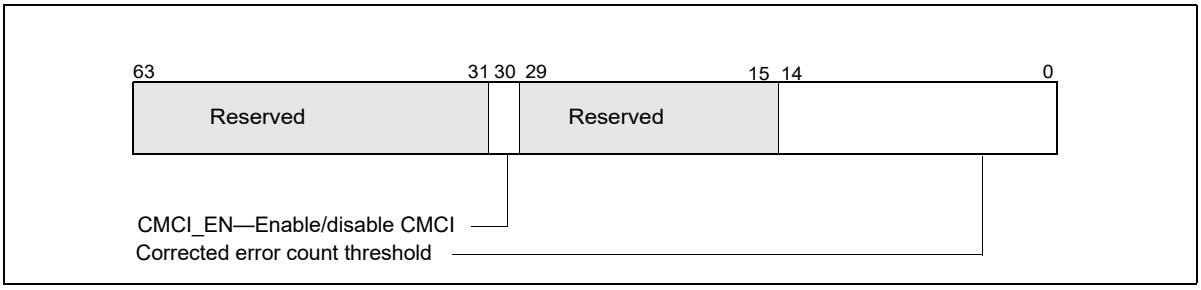

Figure 16-9. IA32_MCi_CTL2 Register

- **Corrected error count threshold, bits 14:0** — Software must initialize this field. The value is compared with the corrected error count field in IA32_MCi_STATUS, bits 38 through 52. An overflow event is signaled to the CMCI LVT entry (see Table 11-1) in the APIC when the count value equals the threshold value. The new LVT entry in the APIC is at 02F0H offset from the APIC_BASE. If CMCI interface is not supported for a particular bank (but IA32_MCG_CAP[10] = 1), this field will always read 0.
- **CMCI_EN (Corrected error interrupt enable/disable/indicator), bits 30** — Software sets this bit to enable the generation of corrected machine-check error interrupt (CMCI). If CMCI interface is not supported for a particular bank (but IA32_MCG_CAP[10] = 1), this bit is writeable but will always return 0 for that bank. This bit also indicates CMCI is supported or not supported in the corresponding bank. See Section 16.5 for details of software detection of CMCI facility.

Some microarchitectural sub-systems that are the source of corrected MC errors may be shared by more than one logical processors. Consequently, the facilities for reporting MC errors and controlling mechanisms may be shared by more than one logical processors. For example, the IA32_MC*i*_CTL2 MSR is shared between logical processors sharing a processor core. Software is responsible to program IA32_MC*i*_CTL2 MSR in a consistent manner with CMCI delivery and usage.

After processor reset, IA32_MC*i*_CTL2 MSRs are zero'ed.

16.3.2.6 IA32_MCG Extended Machine Check State MSRs

The Pentium 4 and Intel Xeon processors implement a variable number of extended machine-check state MSRs. The MCG_EXT_P flag in the IA32_MCG_CAP MSR indicates the presence of these extended registers, and the MCG_EXT_CNT field indicates the number of these registers actually implemented. See Section 16.3.1.1, "IA32_MCG_CAP MSR." Also see Table 16-5.

Table 16-5. Extended Machine Check State MSRs in Processors Without Support for Intel 64 Architecture

MSR	Address	Description
IA32_MCG_EAX	180H	Contains state of the EAX register at the time of the machine-check error.
IA32_MCG_EBX	181H	Contains state of the EBX register at the time of the machine-check error.
IA32_MCG_ECX	182H	Contains state of the ECX register at the time of the machine-check error.
IA32_MCG_EDX	183H	Contains state of the EDX register at the time of the machine-check error.
IA32_MCG_ESI	184H	Contains state of the ESI register at the time of the machine-check error.
IA32_MCG_EDI	185H	Contains state of the EDI register at the time of the machine-check error.
IA32_MCG_EBP	186H	Contains state of the EBP register at the time of the machine-check error.
IA32_MCG_ESP	187H	Contains state of the ESP register at the time of the machine-check error.
IA32_MCG_EFLAGS	188H	Contains state of the EFLAGS register at the time of the machine-check error.
IA32_MCG_EIP	189H	Contains state of the EIP register at the time of the machine-check error.
IA32_MCG_MISC	18AH	When set, indicates that a page assist or page fault occurred during DS normal operation.

In processors with support for Intel 64 architecture, 64-bit machine check state MSRs are aliased to the legacy MSRs. In addition, there may be registers beyond IA32_MCG_MISC. These may include up to five reserved MSRs (IA32_MCG_RESERVED[1:5]) and save-state MSRs for registers introduced in 64-bit mode. See Table 16-6.

Table 16-6. Extended Machine Check State MSRs In Processors With Support For Intel 64 Architecture

MSR	Address	Description
IA32_MCG_RAX	180H	Contains state of the RAX register at the time of the machine-check error.
IA32_MCG_RBX	181H	Contains state of the RBX register at the time of the machine-check error.
IA32_MCG_RCX	182H	Contains state of the RCX register at the time of the machine-check error.
IA32_MCG_RDX	183H	Contains state of the RDX register at the time of the machine-check error.
IA32_MCG_RSI	184H	Contains state of the RSI register at the time of the machine-check error.
IA32_MCG_RDI	185H	Contains state of the RDI register at the time of the machine-check error.
IA32_MCG_RBP	186H	Contains state of the RBP register at the time of the machine-check error.
IA32_MCG_RSP	187H	Contains state of the RSP register at the time of the machine-check error.
IA32_MCG_RFLAGS	188H	Contains state of the RFLAGS register at the time of the machine-check error.
IA32_MCG_RIP	189H	Contains state of the RIP register at the time of the machine-check error.

Table 16-6. Extended Machine Check State MSRs
In Processors With Support For Intel 64 Architecture (Contd.)

MSR	Address	Description
IA32_MCG_MISC	18AH	When set, indicates that a page assist or page fault occurred during DS normal operation.
IA32_MCG_ RSERVED[1:5]	18BH-18FH	These registers, if present, are reserved.
IA32_MCG_R8	190H	Contains state of the R8 register at the time of the machine-check error.
IA32_MCG_R9	191H	Contains state of the R9 register at the time of the machine-check error.
IA32_MCG_R10	192H	Contains state of the R10 register at the time of the machine-check error.
IA32_MCG_R11	193H	Contains state of the R11 register at the time of the machine-check error.
IA32_MCG_R12	194H	Contains state of the R12 register at the time of the machine-check error.
IA32_MCG_R13	195H	Contains state of the R13 register at the time of the machine-check error.
IA32_MCG_R14	196H	Contains state of the R14 register at the time of the machine-check error.
IA32_MCG_R15	197H	Contains state of the R15 register at the time of the machine-check error.

When a machine-check error is detected on a Pentium 4 or Intel Xeon processor, the processor saves the state of the general-purpose registers, the R/EFLAGS register, and the R/EIP in these extended machine-check state MSRs. This information can be used by a debugger to analyze the error.

These registers are read/write to zero registers. This means software can read them; but if software writes to them, only all zeros is allowed. If software attempts to write a non-zero value into one of these registers, a general-protection (#GP) exception is generated. These registers are cleared on a hardware reset (power-up or RESET), but maintain their contents following a soft reset (INIT reset).

16.3.3 Mapping of the Pentium Processor Machine-Check Errors to the Machine-Check Architecture

The Pentium processor reports machine-check errors using two registers: P5_MC_TYPE and P5_MC_ADDR. The Pentium 4, Intel Xeon, Intel Atom, and P6 family processors map these registers to the IA32_MC*i*_STATUS and IA32_MC*i*_ADDR in the error-reporting register bank. This bank reports on the same type of external bus errors reported in P5_MC_TYPE and P5_MC_ADDR.

The information in these registers can then be accessed in two ways:

- By reading the IA32_MC*i*_STATUS and IA32_MC*i*_ADDR registers as part of a general machine-check exception handler written for Pentium 4, Intel Atom and P6 family processors.
- By reading the P5_MC_TYPE and P5_MC_ADDR registers using the RDMSR instruction.

The second capability permits a machine-check exception handler written to run on a Pentium processor to be run on a Pentium 4, Intel Xeon, Intel Atom, or P6 family processor. There is a limitation in that information returned by the Pentium 4, Intel Xeon, Intel Atom, and P6 family processors is encoded differently than information returned by the Pentium processor. To run a Pentium processor machine-check exception handler on a Pentium 4, Intel Xeon, Intel Atom, or P6 family processor; the handler must be written to interpret P5_MC_TYPE encodings correctly.

16.4 ENHANCED CACHE ERROR REPORTING

Starting with Intel Core Duo processors, cache error reporting was enhanced. In earlier Intel processors, cache status was based on the number of correction events that occurred in a cache. In the new paradigm, called "threshold-based error status", cache status is based on the number of lines (ECC blocks) in a cache that incur repeated corrections. The threshold is chosen by Intel, based on various factors. If a processor supports threshold-based error status, it sets IA32_MCG_CAP[11] (MCG_TES_P) to 1; if not, to 0.

A processor that supports enhanced cache error reporting contains hardware that tracks the operating status of certain caches and provides an indicator of their "health". The hardware reports a "green" status when the number of lines that incur repeated corrections is at or below a pre-defined threshold, and a "yellow" status when the number of affected lines exceeds the threshold. Yellow status means that the cache reporting the event is operating correctly, but you should schedule the system for servicing within a few weeks.

Intel recommends that you rely on this mechanism for structures supported by threshold-base error reporting.

The CPU/system/platform response to a yellow event should be less severe than its response to an uncorrected error. An uncorrected error means that a serious error has actually occurred, whereas the yellow condition is a warning that the number of affected lines has exceeded the threshold but is not, in itself, a serious event: the error was corrected and system state was not compromised.

The green/yellow status indicator is not a foolproof early warning for an uncorrected error resulting from the failure of two bits in the same ECC block. Such a failure can occur and cause an uncorrected error before the yellow threshold is reached. However, the chance of an uncorrected error increases as the number of affected lines increases.

16.5 CORRECTED MACHINE CHECK ERROR INTERRUPT

Corrected machine-check error interrupt (CMCI) is an architectural enhancement to the machine-check architecture. It provides capabilities beyond those of threshold-based error reporting (Section 16.4). With threshold-based error reporting, software is limited to use periodic polling to query the status of hardware corrected MC errors. CMCI provides a signaling mechanism to deliver a local interrupt based on threshold values that software can program using the IA32_MCi_CTL2 MSRs.

CMCI is disabled by default. System software is required to enable CMCI for each IA32_MCi bank that support the reporting of hardware corrected errors if IA32_MCG_CAP[10] = 1.

System software use IA32_MCi_CTL2 MSR to enable/disable the CMCI capability for each bank and program threshold values into IA32_MCi_CTL2 MSR. CMCI is not affected by the CR4.MCE bit, and it is not affected by the IA32_MCi_CTL MSRs.

To detect the existence of thresholding for a given bank, software writes only bits 14:0 with the threshold value. If the bits persist, then thresholding is available (and CMCI is available). If the bits are all 0's, then no thresholding exists. To detect that CMCI signaling exists, software writes a 1 to bit 30 of the MCi_CTL2 register. Upon subsequent read, if bit 30 = 0, no CMCI is available for this bank and no corrected or UCNA errors will be reported on this bank. If bit 30 = 1, then CMCI is available and enabled.

16.5.1 CMCI Local APIC Interface

The operation of CMCI is depicted in Figure 16-10.

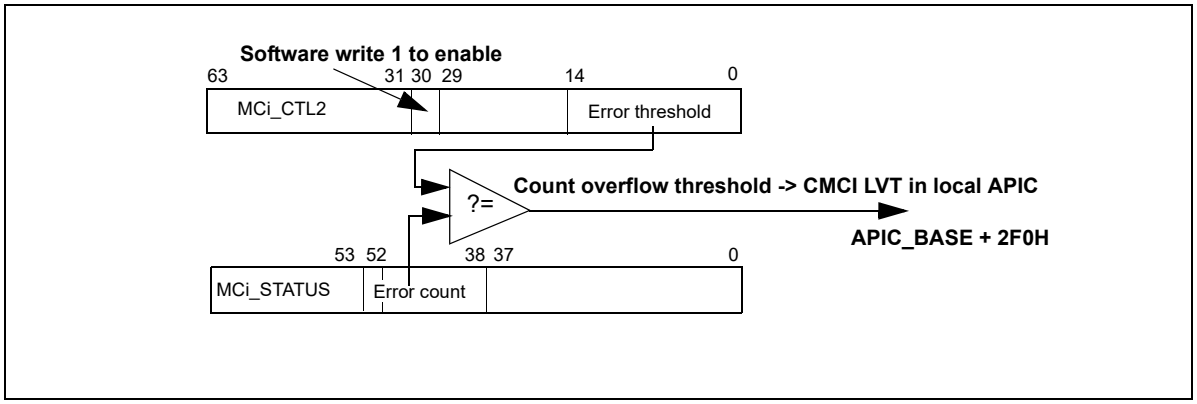

Figure 16-10. CMCI Behavior

CMCI interrupt delivery is configured by writing to the LVT CMCI register entry in the local APIC register space at default address of APIC_BASE + 2F0H. A CMCI interrupt can be delivered to more than one logical processors if multiple logical processors are affected by the associated MC errors. For example, if a corrected bit error in a cache shared by two logical processors caused a CMCI, the interrupt will be delivered to both logical processors sharing that microarchitectural sub-system. Similarly, package level errors may cause CMCI to be delivered to all logical processors within the package. However, system level errors will not be handled by CMCI.

See Section 11.5.1, "Local Vector Table" for details regarding the LVT CMCI register.

16.5.2 System Software Recommendation for Managing CMCI and Machine Check Resources

System software must enable and manage CMCI, set up interrupt handlers to service CMCI interrupts delivered to affected logical processors, program CMCI LVT entry, and query machine check banks that are shared by more than one logical processors.

This section describes techniques system software can implement to manage CMCI initialization, service CMCI interrupts in a efficient manner to minimize contentions to access shared MSR resources.

16.5.2.1 CMCI Initialization

Although a CMCI interrupt may be delivered to more than one logical processors depending on the nature of the corrected MC error, only one instance of the interrupt service routine needs to perform the necessary service and make queries to the machine-check banks. The following steps describes a technique that limits the amount of work the system has to do in response to a CMCI.

- To provide maximum flexibility, system software should define per-thread data structure for each logical processor to allow equal-opportunity and efficient response to interrupt delivery. Specifically, the per-thread data structure should include a set of per-bank fields to track which machine check bank it needs to access in response to a delivered CMCI interrupt. The number of banks that needs to be tracked is determined by IA32_MCG_CAP[7:0].
- Initialization of per-thread data structure. The initialization of per-thread data structure must be done serially on each logical processor in the system. The sequencing order to start the per-thread initialization between different logical processor is arbitrary. But it must observe the following specific detail to satisfy the shared nature of specific MSR resources:
  a. Each thread initializes its data structure to indicate that it does not own any MC bank registers.
  b. Each thread examines IA32_MCi_CTL2[30] indicator for each bank to determine if another thread has already claimed ownership of that bank.
     - If IA32_MCi_CTL2[30] had been set by another thread. This thread can not own bank *i* and should proceed to step b. and examine the next machine check bank until all of the machine check banks are exhausted.
     - If IA32_MCi_CTL2[30] = 0, proceed to step c.
  c. Check whether writing a 1 into IA32_MCi_CTL2[30] can return with 1 on a subsequent read to determine this bank can support CMCI.
     - If IA32_MCi_CTL2[30] = 0, this bank does not support CMCI. This thread can not own bank *i* and should proceed to step b. and examine the next machine check bank until all of the machine check banks are exhausted.
     - If IA32_MCi_CTL2[30] = 1, modify the per-thread data structure to indicate this thread claims ownership to the MC bank; proceed to initialize the error threshold count (bits 15:0) of that bank as described in Chapter 16, "CMCI Threshold Management". Then proceed to step b. and examine the next machine check bank until all of the machine check banks are exhausted.
- After the thread has examined all of the machine check banks, it sees if it owns any MC banks to service CMCI. If any bank has been claimed by this thread:
  — Ensure that the CMCI interrupt handler has been set up as described in Chapter 16, "CMCI Interrupt Handler".
  — Initialize the CMCI LVT entry, as described in Section 16.5.1, "CMCI Local APIC Interface".

— Log and clear all of IA32_MCi_Status registers for the banks that this thread owns. This will allow new errors to be logged.

16.5.2.2 CMCI Threshold Management

The Corrected MC error threshold field, IA32_MCi_CTL2[14:0], is architecturally defined. Specifically, all these bits are writable by software, but different processor implementations may choose to implement less than 15 bits as threshold for the overflow comparison with IA32_MCi_STATUS[52:38]. The following describes techniques that software can manage CMCI threshold to be compatible with changes in implementation characteristics:

- Software can set the initial threshold value to 1 by writing 1 to IA32_MCi_CTL2[14:0]. This will cause overflow condition on every corrected MC error and generates a CMCI interrupt.
- To increase the threshold and reduce the frequency of CMCI servicing:
  a. Find the maximum threshold value a given processor implementation supports. The steps are:
     - Write 7FFFH to IA32_MCi_CTL2[14:0],
     - Read back IA32_MCi_CTL2[14:0]; these 15 bits (14:0) contain the maximum threshold supported by the processor.
  b. Increase the threshold to a value below the maximum value discovered using step a.

16.5.2.3 CMCI Interrupt Handler

The following describes techniques system software may consider to implement a CMCI service routine:

- The service routine examines its private per-thread data structure to check which set of MC banks it has ownership. If the thread does not have ownership of a given MC bank, proceed to the next MC bank. Ownership is determined at initialization time which is described in Section 16.5.2.1.

If the thread had claimed ownership to an MC bank, this technique will allow each logical processors to handle corrected MC errors independently and requires no synchronization to access shared MSR resources. Consult Example 16-5 for guidelines on logging when processing CMCI.

16.6 RECOVERY OF UNCORRECTED RECOVERABLE (UCR) ERRORS

Recovery of uncorrected recoverable machine check errors is an enhancement in machine-check architecture. The first processor that supports this feature is 45 nm Intel 64 processor on which CPUID reports DisplayFamily_DisplayModel as 06H_2EH (see CPUID instruction in Chapter 3, “Instruction Set Reference, A-L” in the *Intel® 64 and IA-32 Architectures Software Developer’s Manual, Volume 2A*). This allow system software to perform recovery action on certain class of uncorrected errors and continue execution.

16.6.1 Detection of Software Error Recovery Support

Software must use bit 24 of IA32_MCG_CAP (MCG_SER_P) to detect the presence of software error recovery support (see Figure 16-2). When IA32_MCG_CAP[24] is set, this indicates that the processor supports software error recovery. When this bit is clear, this indicates that there is no support for error recovery from the processor and the primary responsibility of the machine check handler is logging the machine check error information and shutting down the system.

The new class of architectural MCA errors from which system software can attempt recovery is called Uncorrected Recoverable (UCR) Errors. UCR errors are uncorrected errors that have been detected and signaled but have not corrupted the processor context. For certain UCR errors, this means that once system software has performed a certain recovery action, it is possible to continue execution on this processor. UCR error reporting provides an error containment mechanism for data poisoning. The machine check handler will use the error log information from the error reporting registers to analyze and implement specific error recovery actions for UCR errors.

16.6.2 UCR Error Reporting and Logging

IA32_MCi_STATUS MSR is used for reporting UCR errors and existing corrected or uncorrected errors. The definitions of IA32_MCi_STATUS, including bit fields to identify UCR errors, is shown in Figure 16-6. UCR errors can be signaled through either the corrected machine check interrupt (CMCI) or machine check exception (MCE) path depending on the type of the UCR error.

When IA32_MCG_CAP[24] is set, a UCR error is indicated by the following bit settings in the IA32_MCi_STATUS register:

- Valid (bit 63) = 1
- UC (bit 61) = 1
- PCC (bit 57) = 0

Additional information from the IA32_MCi_MISC and the IA32_MCi_ADDR registers for the UCR error are available when the ADDRV and the MISCV flags in the IA32_MCi_STATUS register are set (see Section 16.3.2.4). The MCA error code field of the IA32_MCi_STATUS register indicates the type of UCR error. System software can interpret the MCA error code field to analyze and identify the necessary recovery action for the given UCR error.

In addition, the IA32_MCi_STATUS register bit fields, bits 56:55, are defined (see Figure 16-6) to provide additional information to help system software to properly identify the necessary recovery action for the UCR error:

- S (Signaling) flag, bit 56 - Indicates (when set) that a machine check exception was generated for the UCR error reported in this MC bank and system software needs to check the AR flag and the MCA error code fields in the IA32_MCi_STATUS register to identify the necessary recovery action for this error. When the S flag in the IA32_MCi_STATUS register is clear, this UCR error was not signaled via a machine check exception and instead was reported as a corrected machine check (CMC). System software is not required to take any recovery action when the S flag in the IA32_MCi_STATUS register is clear.
- AR (Action Required) flag, bit 55 - Indicates (when set) that MCA error code specific recovery action must be performed by system software at the time this error was signaled. This recovery action must be completed successfully before any additional work is scheduled for this processor. When the RIPV flag in the IA32_MCG_STATUS is clear, an alternative execution stream needs to be provided; when the MCA error code specific recovery specific recovery action cannot be successfully completed, system software must shut down the system. When the AR flag in the IA32_MCi_STATUS register is clear, system software may still take MCA error code specific recovery action but this is optional; system software can safely resume program execution at the instruction pointer saved on the stack from the machine check exception when the RIPV flag in the IA32_MCG_STATUS register is set.

Both the S and the AR flags in the IA32_MCi_STATUS register are defined to be sticky bits, which mean that once set, the processor does not clear them. Only software and good power-on reset can clear the S and the AR-flags. Both the S and the AR flags are only set when the processor reports the UCR errors (MCG_CAP[24] is set).

16.6.3 UCR Error Classification

With the S and AR flag encoding in the IA32_MCi_STATUS register, UCR errors can be classified as:

- Uncorrected no action required (UCNA) - is a UCR error that is not signaled via a machine check exception and, instead, is reported to system software as a corrected machine check error. UCNA errors indicate that some data in the system is corrupted, but the data has not been consumed and the processor state is valid and you may continue execution on this processor. UCNA errors require no action from system software to continue execution. A UCNA error is indicated with UC=1, PCC=0, S=0 and AR=0 in the IA32_MCi_STATUS register.
- Software recoverable action optional (SRAO) - a UCR error is signaled either via a machine check exception or CMCI. System software recovery action is optional and not required to continue execution from this machine check exception. SRAO errors indicate that some data in the system is corrupt, but the data has not been consumed and the processor state is valid. SRAO errors provide the additional error information for system software to perform a recovery action. An SRAO error when signaled as a machine check is indicated with UC=1, PCC=0, S=1, EN=1 and AR=0 in the IA32_MC*i*_STATUS register. In cases when SRAO is signaled via CMCI the error signature is indicated via UC=1, PCC=0, S=0. Recovery actions for SRAO errors are MCA error code specific. The MISCV and the ADDRV flags in the IA32_MC*i*_STATUS register are set when the additional error information is available from the IA32_MC*i*_MISC and the IA32_MC*i*_ADDR registers. System software needs to inspect the MCA error code fields in the IA32_MC*i*_STATUS register to identify the specific recovery

action for a given SRAO error. If MISCV and ADDRV are not set, it is recommended that no system software error recovery be performed however, system software can resume execution.

- Software recoverable action required (SRAR) - a UCR error that requires system software to take a recovery action on this processor before scheduling another stream of execution on this processor. SRAR errors indicate that the error was detected and raised at the point of the consumption in the execution flow. An SRAR error is indicated with UC=1, PCC=0, S=1, EN=1 and AR=1 in the IA32_MCi_STATUS register. Recovery actions are MCA error code specific. The MISCV and the ADDRV flags in the IA32_MCi_STATUS register are set when the additional error information is available from the IA32_MCi_MISC and the IA32_MCi_ADDR registers. System software needs to inspect the MCA error code fields in the IA32_MCi_STATUS register to identify the specific recovery action for a given SRAR error. If MISCV and ADDRV are not set, it is recommended that system software shutdown the system.

Table 16-7 summarizes UCR, corrected, and uncorrected errors.

Table 16-7. MC Error Classifications

Type of Error[1]	UC	EN	PCC	S	AR	Signaling	Software Action	Example
Uncorrected Error (UC)	1	1	1	x	x	MCE	If EN=1, reset the system, else log and OK to keep the system running.	
SRAR	1	1	0	1	1	MCE	For known MCACOD, take specific recovery action; For unknown MCACOD, must bugcheck. If OVER=1, reset system, else take specific recovery action.	Cache to processor load error.
SRAO	1	x[2]	0	x[2]	0	MCE/CMC	For known MCACOD, take specific recovery action; For unknown MCACOD, OK to keep the system running.	Patrol scrub and explicit writeback poison errors.
UCNA	1	x	0	0	0	CMC	Log the error and Ok to keep the system running.	Poison detection error.
Corrected Error (CE)	0	x	x	x	x	CMC	Log the error and no corrective action required.	ECC in caches and memory.

NOTES:

1. SRAR, SRAO and UCNA errors are supported by the processor only when IA32_MCG_CAP[24] (MCG_SER_P) is set.
2. EN=1, S=1 when signaled via MCE. EN=x, S=0 when signaled via CMC.

16.6.4 UCR Error Overwrite Rules

In general, the overwrite rules are as follows:

- UCR errors will overwrite corrected errors.
- Uncorrected (PCC=1) errors overwrite UCR (PCC=0) errors.
- UCR errors are not written over previous UCR errors.
- Corrected errors do not write over previous UCR errors.

Regardless of whether the 1st error is retained or the 2nd error is overwritten over the 1st error, the OVER flag in the IA32_MCi_STATUS register will be set to indicate an overflow condition. As the S flag and AR flag in the IA32_MCi_STATUS register are defined to be sticky flags, a second event cannot clear these 2 flags once set, however the MC bank information may be filled in for the 2nd error. The table below shows the overwrite rules and how to treat a second error if the first event is already logged in a MC bank along with the resulting bit setting of the UC, PCC, and AR flags in the IA32_MCi_STATUS register. As UCNA and SRA0 errors do not require recovery action from system software to continue program execution, a system reset by system software is not required unless the AR flag or PCC flag is set for the UCR overflow case (OVER=1, VAL=1, UC=1, PCC=0).

Table 16-8 lists overwrite rules for uncorrected errors, corrected errors, and uncorrected recoverable errors.

Table 16-8. Overwrite Rules for UC, CE, and UCR Errors

First Event	Second Event	UC	PCC	S	AR	MCA Bank	Reset System
CE	UCR	1	0	0 if UCNA, else 1	1 if SRAR, else 0	second	yes, if AR=1
UCR	CE	1	0	0 if UCNA, else 1	1 if SRAR, else 0	first	yes, if AR=1
UCNA	UCNA	1	0	0	0	first	no
UCNA	SRAO	1	0	1	0	first	no
UCNA	SRAR	1	0	1	1	first	yes
SRAO	UCNA	1	0	1	0	first	no
SRAO	SRAO	1	0	1	0	first	no
SRAO	SRAR	1	0	1	1	first	yes
SRAR	UCNA	1	0	1	1	first	yes
SRAR	SRAO	1	0	1	1	first	yes
SRAR	SRAR	1	0	1	1	first	yes
UCR	UC	1	1	undefined	undefined	second	yes
UC	UCR	1	1	undefined	undefined	first	yes

16.7 MACHINE-CHECK AVAILABILITY

The machine-check architecture and machine-check exception (#MC) are model-specific features. Software can execute the CPUID instruction to determine whether a processor implements these features. Following the execution of the CPUID instruction, the settings of the MCA flag (bit 14) and MCE flag (bit 7) in EDX indicate whether the processor implements the machine-check architecture and machine-check exception.

16.8 MACHINE-CHECK INITIALIZATION

To use the processors machine-check architecture, software must initialize the processor to activate the machine-check exception and the error-reporting mechanism.

Example 16-1 gives pseudocode for performing this initialization. This pseudocode checks for the existence of the machine-check architecture and exception; it then enables machine-check exception and the error-reporting register banks. The pseudocode shown is compatible with the Pentium 4, Intel Xeon, Intel Atom, P6 family, and Pentium processors.

Following power up or power cycling, IA32_MC*i*_STATUS registers are not guaranteed to have valid data until after they are initially cleared to zero by software (as shown in the initialization pseudocode in Example 16-1).

Example 16-1. Machine-Check Initialization Pseudocode

```
Check CPUID Feature Flags for MCE and MCA support
IF CPU supports MCE
THEN
    IF CPU supports MCA
    THEN
        IF (IA32_MCG_CAP.MCG_CTL_P = 1)
        (* IA32_MCG_CTL register is present *)
        THEN
            IA32_MCG_CTL ← FFFFFFFFFFFFFFFFH;
            (* enables all MCA features *)
        FI

        IF (IA32_MCG_CAP.MCG_LMCE_P = 1 and IA32_FEATURE_CONTROL.LOCK = 1 and IA32_FEATURE_CONTROL.LMCE_ENABLED = 1)
        (* IA32_MCG_EXT_CTL register is present and platform has enabled LMCE to permit system software to use LMCE *)
```

```
        THEN
            IA32_MCG_EXT_CTL ← IA32_MCG_EXT_CTL | 01H;
            (* System software enables LMCE capability for hardware to signal MCE to a single logical processor*)
        FI

        (* Determine number of error-reporting banks supported *)
        COUNT← IA32_MCG_CAP.Count;
        MAX_BANK_NUMBER ← COUNT - 1;

        IF (Processor Family is 6H and Processor EXTMODEL:MODEL is less than 1AH)
        THEN
            (* Enable logging of all errors except for MC0_CTL register *)
            FOR error-reporting banks (1 through MAX_BANK_NUMBER)
            DO
                IA32_MCi_CTL ← 0FFFFFFFFFFFFFFFFH;
            OD

        ELSE
            (* Enable logging of all errors including MC0_CTL register *)
            FOR error-reporting banks (0 through MAX_BANK_NUMBER)
            DO
                IA32_MCi_CTL ← 0FFFFFFFFFFFFFFFFH;
            OD
        FI

        (* BIOS clears all errors only on power-on reset *)
        IF (BIOS detects Power-on reset)
        THEN
            FOR error-reporting banks (0 through MAX_BANK_NUMBER)
            DO
                IA32_MCi_STATUS ← 0;
            OD
        ELSE
            FOR error-reporting banks (0 through MAX_BANK_NUMBER)
            DO
                (Optional for BIOS and OS) Log valid errors
                (OS only) IA32_MCi_STATUS ← 0;
            OD

        FI
    FI

    Setup the Machine Check Exception (#MC) handler for vector 18 in IDT

    Set the MCE bit (bit 6) in CR4 register to enable Machine-Check Exceptions
FI
```

16.9 INTERPRETING THE MCA ERROR CODES

When the processor detects a machine-check error condition, it writes a 16-bit error code to the MCA error code field of one of the IA32_MC*i*_STATUS registers and sets the VAL (valid) flag in that register. The processor may also write a 16-bit model-specific error code in the IA32_MC*i*_STATUS register depending on the implementation of the machine-check architecture of the processor.

The MCA error codes are architecturally defined for Intel 64 and IA-32 processors. To determine the cause of a machine-check exception, the machine-check exception handler must read the VAL flag for each IA32_MC*i*_STATUS register. If the flag is set, the machine check-exception handler must then read the MCA error code field of the register. It is the encoding of the MCA error code field [15:0] that determines the type of error being reported and not the register bank reporting it.

There are two types of MCA error codes: simple error codes and compound error codes.

16.9.1 Simple Error Codes

Table 16-9 shows the simple error codes. These unique codes indicate global error information.

Table 16-9. IA32_MCi_Status [15:0] Simple Error Code Encoding

Error Code	Binary Encoding	Meaning
No Error	0000 0000 0000 0000	No error has been reported to this bank of error-reporting registers.
Unclassified	0000 0000 0000 0001	This error has not been classified into the MCA error classes.
Microcode ROM Parity Error	0000 0000 0000 0010	Parity error in internal microcode ROM
External Error	0000 0000 0000 0011	The BINIT# from another processor caused this processor to enter machine check.[1]
FRC Error	0000 0000 0000 0100	FRC (functional redundancy check) main/secondary error.
Internal Parity Error	0000 0000 0000 0101	Internal parity error.
SMM Handler Code Access Violation	0000 0000 0000 0110	An attempt was made by the SMM Handler to execute outside the ranges specified by SMRR.
Internal Timer Error	0000 0100 0000 0000	Internal timer error.
I/O Error	0000 1110 0000 1011	generic I/O error.
Internal Unclassified	0000 01xx xxxx xxxx	Internal unclassified errors. [2]

NOTES:

1. BINIT# assertion will cause a machine check exception if the processor (or any processor on the same external bus) has BINIT# observation enabled during power-on configuration (hardware strapping) and if machine check exceptions are enabled (by setting CR4.MCE = 1).
2. At least one X must equal one. Internal unclassified errors have not been classified.

16.9.2 Compound Error Codes

Compound error codes describe errors related to the TLBs, memory, caches, bus and interconnect logic, and internal timer. A set of sub-fields is common to all of compound errors. These sub-fields describe the type of access, level in the cache hierarchy, and type of request. Table 16-10 shows the general form of the compound error codes.

Table 16-10. IA32_MCi_Status [15:0] Compound Error Code Encoding

Type	Form	Interpretation
Generic Cache Hierarchy	000F 0000 0000 11LL	Generic cache hierarchy error
TLB Errors	000F 0000 0001 TTLL	{TT}TLB{LL}_ERR
Memory Controller Errors	000F 0000 1MMM CCCC	{MMM}_CHANNEL{CCCC}_ERR
Cache Hierarchy Errors	000F 0001 RRRR TTLL	{TT}CACHE{LL}_{RRRR}_ERR
Extended Memory Errors	000F 0010 1MMM CCCC	{MMM}_CHANNEL{CCCC}_ERR
Bus and Interconnect Errors	000F 1PPT RRRR IILL	BUS{LL}_{PP}_{RRRR}_{II}_{T}_ERR

The "Interpretation" column in the table indicates the name of a compound error. The name is constructed by substituting mnemonics for the sub-field names given within curly braces. For example, the error code ICACHEL1_RD_ERR is constructed from the form:

{TT}CACHE{LL}_{RRRR}_ERR,
where {TT} is replaced by I, {LL} is replaced by L1, and {RRRR} is replaced by RD.

For more information on the "Form" and "Interpretation" columns, see Sections Section 16.9.2.1, "Correction Report Filtering (F) Bit" through Section 16.9.2.5, "Bus and Interconnect Errors".

16.9.2.1 Correction Report Filtering (F) Bit

Starting with Intel Core Duo processors, bit 12 in the "Form" column in Table 16-10 is used to indicate that a particular posting to a log may be the last posting for corrections in that line/entry, at least for some time:

- 0 in bit 12 indicates "normal" filtering (original P6/Pentium4/Atom/Xeon processor meaning).
- 1 in bit 12 indicates "corrected" filtering (filtering is activated for the line/entry in the posting). Filtering means that some or all of the subsequent corrections to this entry (in this structure) will not be posted. The enhanced error reporting introduced with the Intel Core Duo processors is based on tracking the lines affected by repeated corrections (see Section 16.4, "Enhanced Cache Error reporting"). This capability is indicated by IA32_MCG_CAP[11]. Only the first few correction events for a line are posted; subsequent redundant correction events to the same line are not posted. Uncorrected events are always posted.

The behavior of error filtering after crossing the yellow threshold is model-specific. Filtering has meaning only for corrected errors (UC=0 in IA32_MCi_STATUS MSR). System software must ignore filtering bit (12) for uncorrected errors.

16.9.2.2 Transaction Type (TT) Sub-Field

The 2-bit TT sub-field (Table 16-11) indicates the type of transaction (data, instruction, or generic). The sub-field applies to the TLB, cache, and interconnect error conditions. Note that interconnect error conditions are primarily associated with P6 family and Pentium processors, which utilize an external APIC bus separate from the system bus. The generic type is reported when the processor cannot determine the transaction type.

Table 16-11. Encoding for TT (Transaction Type) Sub-Field

Transaction Type	Mnemonic	Binary Encoding
Instruction	I	00
Data	D	01
Generic	G	10

16.9.2.3 Level (LL) Sub-Field

The 2-bit LL sub-field (see Table 16-12) indicates the level in the memory hierarchy where the error occurred (level 0, level 1, level 2, or generic). The LL sub-field also applies to the TLB, cache, and interconnect error conditions. The Pentium 4, Intel Xeon, Intel Atom, and P6 family processors support two levels in the cache hierarchy and one level in the TLBs. Again, the generic type is reported when the processor cannot determine the hierarchy level.

Table 16-12. Level Encoding for LL (Memory Hierarchy Level) Sub-Field

Hierarchy Level	Mnemonic	Binary Encoding
Level 0	L0	00
Level 1	L1	01
Level 2	L2	10
Generic	LG	11

16.9.2.4 Request (RRRR) Sub-Field

The 4-bit RRRR sub-field (see Table 16-13) indicates the type of action associated with the error. Actions include read and write operations, prefetches, cache evictions, and snoops. Generic error is returned when the type of error cannot be determined. Generic read and generic write are returned when the processor cannot determine the type of instruction or data request that caused the error. Eviction and snoop requests apply only to the caches. All of the other requests apply to TLBs, caches, and interconnects.

Table 16-13. Encoding of Request (RRRR) Sub-Field

Request Type	Mnemonic	Binary Encoding
Generic Error	ERR	0000
Generic Read	RD	0001
Generic Write	WR	0010
Data Read	DRD	0011
Data Write	DWR	0100
Instruction Fetch	IRD	0101
Prefetch	PREFETCH	0110
Eviction	EVICT	0111
Snoop	SNOOP	1000

16.9.2.5 Bus and Interconnect Errors

The bus and interconnect errors are defined with the 2-bit PP (participation), 1-bit T (time-out), and 2-bit II (memory or I/O) sub-fields, in addition to the LL and RRRR sub-fields (see Table 16-14). The bus error conditions are implementation dependent and related to the type of bus implemented by the processor. Likewise, the interconnect error conditions are predicated on a specific implementation-dependent interconnect model that describes the connections between the different levels of the storage hierarchy. The type of bus is implementation dependent, and as such is not specified in this document. A bus or interconnect transaction consists of a request involving an address and a response.

Table 16-14. Encodings of PP, T, and II Sub-Fields

Sub-Field	Transaction	Mnemonic	Binary Encoding
PP (Participation)	Local processor* originated request	SRC	00
	Local processor* responded to request	RES	01
	Local processor* observed error as third party	OBS	10
	Generic		11
T (Time-out)	Request timed out	TIMEOUT	1
	Request did not time out	NOTIMEOUT	0
II (Memory or I/O)	Memory Access	M	00
	Reserved		01
	I/O	IO	10
	Other transaction		11

NOTE:

* Local processor differentiates the processor reporting the error from other system components (including the APIC, other processors, etc.).

16.9.2.6 Memory Controller and Extended Memory Errors

The memory controller errors are defined with the 3-bit MMM (memory transaction type), and 4-bit CCCC (channel) sub-fields. The encodings for MMM and CCCC are defined in Table 16-15. Extended Memory errors use the same encodings and are used to report errors in memory used as a cache.

Table 16-15. Encodings of MMM and CCCC Sub-Fields

Sub-Field	Transaction	Mnemonic	Binary Encoding
MMM	Generic undefined request	GEN	000
	Memory read error	RD	001
	Memory write error	WR	010
	Address/Command Error	AC	011
	Memory Scrubbing Error	MS	100
	Reserved		101-111
CCCC	Channel number	CHN	0000-1110
	Channel not specified		1111

Note that the CCCC channel number may be enumerated from zero separately by each memory controller on a system. On a multi-socket system, or a system with multiple memory controllers per socket, it is necessary to also consider which machine check bank logged the error. See Chapter 17 for details on specific implementations.

16.9.3 Architecturally Defined UCR Errors

Software recoverable compound error code are defined in this section.

16.9.3.1 Architecturally Defined SRAO Errors

The following two SRAO errors are architecturally defined.

- UCR Errors detected by memory controller scrubbing; and
- UCR Errors detected during L3 cache (L3) explicit writebacks.

The MCA error code encodings for these two architecturally-defined UCR errors corresponds to sub-classes of compound MCA error codes (see Table 16-10). Their values and compound encoding format are given in Table 16-16.

Table 16-16. MCA Compound Error Code Encoding for SRAO Errors

Type	MCACOD Value	MCA Error Code Encoding[1]
Memory Scrubbing	C0H - CFH	0000_0000_1100_CCCC 000F 0000 1MMM CCCC (Memory Controller Error), where Memory subfield MMM = 100B (memory scrubbing) Channel subfield CCCC = channel # or generic
L3 Explicit Writeback	17AH	0000_0001_0111_1010 000F 0001 RRRR TTLL (Cache Hierarchy Error) where Request subfields RRRR = 0111B (Eviction) Transaction Type subfields TT = 10B (Generic) Level subfields LL = 10B

NOTES:

1. Note that for both of these errors the correction report filtering (F) bit (bit 12) of the MCA error must be ignored.

Table 16-17 lists values of relevant bit fields of IA32_MCi_STATUS for architecturally defined SRAO errors.

Table 16-17. IA32_MCi_STATUS Values for SRAO Errors

SRAO Error	Valid	OVER	UC	EN	MISCV	ADDRV	PCC	S	AR	MCACOD
Memory Scrubbing	1	0	1	x[1]	1	1	0	x[1]	0	COH-CFH
L3 Explicit Writeback	1	0	1	x[1]	1	1	0	x[1]	0	17AH

NOTES:

1. When signaled as MCE, EN=1 and S=1. If error was signaled via CMC, then EN=x, and S=0.

For both the memory scrubbing and L3 explicit writeback errors, the ADDRV and MISCV flags in the IA32_MCi_STATUS register are set to indicate that the offending physical address information is available from the IA32_MCi_MISC and the IA32_MCi_ADDR registers. For the memory scrubbing and L3 explicit writeback errors, the address mode in the IA32_MCi_MISC register should be set as physical address mode (010b) and the address LSB information in the IA32_MCi_MISC register should indicate the lowest valid address bit in the address information provided from the IA32_MCi_ADDR register.

MCE signal is broadcast to all logical processors as outlined in Section 16.10.4.1. If LMCE is supported and enabled, some errors (not limited to UCR errors) may be delivered to only a single logical processor. System software should consult IA32_MCG_STATUS.LMCE_S to determine if the MCE signaled is only to this logical processor.

IA32_MCi_STATUS banks can be shared by logical processors within a core or within the same package. So several logical processors may find an SRAO error in the shared IA32_MCi_STATUS bank but other processors do not find it in any of the IA32_MCi_STATUS banks. Table 16-18 shows the RIPV and EIPV flag indication in the IA32_MCG_STATUS register for the memory scrubbing and L3 explicit writeback errors on both the reporting and non-reporting logical processors.

Table 16-18. IA32_MCG_STATUS Flag Indication for SRAO Errors

SRAO Type	Reporting Logical Processors		Non-reporting Logical Processors	
	RIPV	EIPV	RIPV	EIPV
Memory Scrubbing	1	0	1	0
L3 Explicit Writeback	1	0	1	0

16.9.3.2 Architecturally Defined SRAR Errors

The following two SRAR errors are architecturally defined.

- UCR Errors detected on data load; and
- UCR Errors detected on instruction fetch.

The MCA error code encodings for these two architecturally-defined UCR errors corresponds to sub-classes of compound MCA error codes (see Table 16-10). Their values and compound encoding format are given in Table 16-19.

Table 16-19. MCA Compound Error Code Encoding for SRAR Errors

Type	MCACOD Value	MCA Error Code Encoding[1]
Data Load	134H	0000_0001_0011_0100 000F 0001 RRRR TTLL (Cache Hierarchy Error), where Request subfield RRRR = 0011B (Data Load) Transaction Type subfield TT= 01B (Data) Level subfield LL = 00B (Level 0)
Instruction Fetch	150H	0000_0001_0101_0000 000F 0001 RRRR TTLL (Cache Hierarchy Error), where Request subfield RRRR = 0101B (Instruction Fetch) Transaction Type subfield TT= 00B (Instruction) Level subfield LL = 00B (Level 0)

NOTES:

1. Note that for both of these errors the correction report filtering (F) bit (bit 12) of the MCA error must be ignored.

Table 16-20 lists values of relevant bit fields of IA32_MCi_STATUS for architecturally defined SRAR errors.

Table 16-20. IA32_MCi_STATUS Values for SRAR Errors

SRAR Error	Valid	OVER	UC	EN	MISCV	ADDRV	PCC	S	AR	MCACOD
Data Load	1	0	1	1	1	1	0	1	1	134H
Instruction Fetch	1	0	1	1	1	1	0	1	1	150H

For both the data load and instruction fetch errors, the ADDRV and MISCV flags in the IA32_MCi_STATUS register are set to indicate that the offending physical address information is available from the IA32_MCi_MISC and the IA32_MCi_ADDR registers. For the memory scrubbing and L3 explicit writeback errors, the address mode in the IA32_MCi_MISC register should be set as physical address mode (010b) and the address LSB information in the IA32_MCi_MISC register should indicate the lowest valid address bit in the address information provided from the IA32_MCi_ADDR register.

MCE signal is broadcast to all logical processors on the system on which the UCR errors are supported, except when the processor supports LMCE and LMCE is enabled by system software (see Section 16.3.1.5). The IA32_MCG_STATUS MSR allows system software to distinguish the affected logical processor of an SRAR error amongst logical processors that observed SRAR via MCi_STATUS bank.

Table 16-21 shows the RIPV and EIPV flag indication in the IA32_MCG_STATUS register for the data load and instruction fetch errors on both the reporting and non-reporting logical processors. The recoverable SRAR error reported by a processor may be continuable, where the system software can interpret the context of continuable as follows: the error was isolated, contained. If software can rectify the error condition in the current instruction stream, the execution context on that logical processor can be continued without loss of information.

Table 16-21. IA32_MCG_STATUS Flag Indication for SRAR Errors

SRAR Type	Affected Logical Processor			Non-Affected Logical Processors		
	RIPV	EIPV	Continuable	RIPV	EIPV	Continuable
Recoverable-continuable	1	1	Yes[1]	1	0	Yes
Recoverable-not-continuable	0	x	No			

NOTES:

1. see the definition of the context of “continuable” above and additional detail below.

SRAR Error And Affected Logical Processors

The affected logical processor is the one that has detected and raised an SRAR error at the point of the consumption in the execution flow. The affected logical processor should find the Data Load or the Instruction Fetch error information in the IA32_MCi_STATUS register that is reporting the SRAR error.

Table 16-21 list the actionable scenarios that system software can respond to an SRAR error on an affected logical processor according to RIPV and EIPV values:

- Recoverable-Continuable SRAR Error (RIPV=1, EIPV=1):

  For Recoverable-Continuable SRAR errors, the affected logical processor should find that both the IA32_MCG_STATUS.RIPV and the IA32_MCG_STATUS.EIPV flags are set, indicating that system software may be able to restart execution from the interrupted context if it is able to rectify the error condition. If system software cannot rectify the error condition then it must treat the error as a recoverable error where restarting execution with the interrupted context is not possible. Restarting without rectifying the error condition will result in most cases with another SRAR error on the same instruction.

- Recoverable-not-continuable SRAR Error (RIPV=0, EIPV=x):

  For Recoverable-not-continuable errors, the affected logical processor should find that either

  — IA32_MCG_STATUS.RIPV= 0, IA32_MCG_STATUS.EIPV=1, or

  — IA32_MCG_STATUS.RIPV= 0, IA32_MCG_STATUS.EIPV=0.

  In either case, this indicates that the error is detected at the instruction pointer saved on the stack for this machine check exception and restarting execution with the interrupted context is not possible. System software may take the following recovery actions for the affected logical processor:

  - The current executing thread cannot be continued. System software must terminate the interrupted stream of execution and provide a new stream of execution on return from the machine check handler for the affected logical processor.

SRAR Error And Non-Affected Logical Processors

The logical processors that observed but not affected by an SRAR error should find that the RIPV flag in the IA32_MCG_STATUS register is set and the EIPV flag in the IA32_MCG_STATUS register is cleared, indicating that it is safe to restart the execution at the instruction saved on the stack for the machine check exception on these processors after the recovery action is successfully taken by system software.

16.9.4 Multiple MCA Errors

When multiple MCA errors are detected within a certain detection window, the processor may aggregate the reporting of these errors together as a single event, i.e., a single machine exception condition. If this occurs, system software may find multiple MCA errors logged in different MC banks on one logical processor or find multiple MCA errors logged across different processors for a single machine check broadcast event. In order to handle multiple UCR errors reported from a single machine check event and possibly recover from multiple errors, system software may consider the following:

- Whether it can recover from multiple errors is determined by the most severe error reported on the system. If the most severe error is found to be an unrecoverable error (VAL=1, UC=1, PCC=1 and EN=1) after system software examines the MC banks of all processors to which the MCA signal is broadcast, recovery from the multiple errors is not possible and system software needs to reset the system.
- When multiple recoverable errors are reported and no other fatal condition (e.g., overflowed condition for SRAR error) is found for the reported recoverable errors, it is possible for system software to recover from the multiple recoverable errors by taking necessary recovery action for each individual recoverable error. However, system software can no longer expect one to one relationship with the error information recorded in the IA32_MCi_STATUS register and the states of the RIPV and EIPV flags in the IA32_MCG_STATUS register as the states of the RIPV and the EIPV flags in the IA32_MCG_STATUS register may indicate the information for the most severe error recorded on the processor. System software is required to use the RIPV flag indication in the IA32_MCG_STATUS register to make a final decision of recoverability of the errors and find the restart-ability requirement after examining each IA32_MCi_STATUS register error information in the MC banks.

  In certain cases where system software observes more than one SRAR error logged for a single logical processor, it can no longer rely on affected threads as specified in Table 15-20 above. System software is recommended to reset the system if this condition is observed.

16.9.5 Machine-Check Error Codes Interpretation

Chapter 17, “Interpreting Machine-Check Error Codes,” provides information on interpreting the MCA error code, model-specific error code, and other information error code fields. For P6 family processors, information has been included on decoding external bus errors. For Pentium 4 and Intel Xeon processors; information is included on external bus, internal timer and cache hierarchy errors.

16.10 GUIDELINES FOR WRITING MACHINE-CHECK SOFTWARE

The machine-check architecture and error logging can be used in three different ways:

- To detect machine errors during normal instruction execution, using the machine-check exception (#MC).
- To periodically check and log machine errors.
- To examine recoverable UCR errors, determine software recoverability and perform recovery actions via a machine-check exception handler or a corrected machine-check interrupt handler.

To use the machine-check exception, the operating system or executive software must provide a machine-check exception handler. This handler may need to be designed specifically for each family of processors.

A special program or utility is required to log machine errors.

Guidelines for writing a machine-check exception handler or a machine-error logging utility are given in the following sections.

16.10.1 Machine-Check Exception Handler

The machine-check exception (#MC) corresponds to vector 18. To service machine-check exceptions, a trap gate must be added to the IDT. The pointer in the trap gate must point to a machine-check exception handler. Two approaches can be taken to designing the exception handler:

1. The handler can merely log all the machine status and error information, then call a debugger or shut down the system.
2. The handler can analyze the reported error information and, in some cases, attempt to correct the error and restart the processor.

For Pentium 4, Intel Xeon, Intel Atom, P6 family, and Pentium processors; virtually all machine-check conditions cannot be corrected (they result in abort-type exceptions). The logging of status and error information is therefore a baseline implementation requirement.

When IA32_MCG_CAP[24] is clear, consider the following when writing a machine-check exception handler:

- To determine the nature of the error, the handler must read each of the error-reporting register banks. The count field in the IA32_MCG_CAP register gives number of register banks. The first register of register bank 0 is at address 400H.
- The VAL (valid) flag in each IA32_MC*i*_STATUS register indicates whether the error information in the register is valid. If this flag is clear, the registers in that bank do not contain valid error information and do not need to be checked.
- To write a portable exception handler, only the MCA error code field in the IA32_MC*i*_STATUS register should be checked. See Section 16.9, "Interpreting the MCA Error Codes," for information that can be used to write an algorithm to interpret this field.
- Correctable errors are corrected automatically by the processor. The UC flag in each IA32_MCi_STATUS register indicates whether the processor automatically corrected an error.
- The RIPV, PCC, and OVER flags in each IA32_MCi_STATUS register indicate whether recovery from the error is possible. If PCC or OVER are set, recovery is not possible. If RIPV is not set, program execution can not be restarted reliably. When recovery is not possible, the handler typically records the error information and signals an abort to the operating system.
- The RIPV flag in the IA32_MCG_STATUS register indicates whether the program can be restarted at the instruction indicated by the instruction pointer (the address of the instruction pushed on the stack when the exception was generated). If this flag is clear, the processor may still be able to be restarted (for debugging purposes) but not without loss of program continuity.
- For unrecoverable errors, the EIPV flag in the IA32_MCG_STATUS register indicates whether the instruction indicated by the instruction pointer pushed on the stack (when the exception was generated) is related to the error. If the flag is clear, the pushed instruction may not be related to the error.
- The MCIP flag in the IA32_MCG_STATUS register indicates whether a machine-check exception was generated. Before returning from the machine-check exception handler, software should clear this flag so that it can be used reliably by an error logging utility. The MCIP flag also detects recursion. The machine-check architecture

does not support recursion. When the processor detects machine-check recursion, it enters the shutdown state.

Example 16-2 gives typical steps carried out by a machine-check exception handler.

Example 16-2. Machine-Check Exception Handler Pseudocode

```
IF CPU supports MCE
    THEN
        IF CPU supports MCA
            THEN
                call errorlogging routine; (* returns restartability *)
        FI;
    ELSE (* Pentium(R) processor compatible *)
        READ P5_MC_ADDR
        READ P5_MC_TYPE;
        report RESTARTABILITY to console;
FI;
IF error is not restartable
    THEN
        report RESTARTABILITY to console;
        abort system;
FI;
CLEAR MCIP flag in IA32_MCG_STATUS;
```

16.10.2 Pentium Processor Machine-Check Exception Handling

Machine-check exception handler on P6 family, Intel Atom and later processor families, should follow the guidelines described in Section 16.10.1 and Example 16-2 that check the processor's support of MCA.

NOTE

On processors that support MCA (CPUID.1.EDX.MCA = 1) reading the P5_MC_TYPE and P5_MC_ADDR registers may produce invalid data.

When machine-check exceptions are enabled for the Pentium processor (MCE flag is set in control register CR4), the machine-check exception handler uses the RDMSR instruction to read the error type from the P5_MC_TYPE register and the machine check address from the P5_MC_ADDR register. The handler then normally reports these register values to the system console before aborting execution (see Example 16-2).

16.10.3 Logging Correctable Machine-Check Errors

The error handling routine for servicing the machine-check exceptions is responsible for logging uncorrected errors.

If a machine-check error is correctable, the processor does not generate a machine-check exception for it. To detect correctable machine-check errors, a utility program must be written that reads each of the machine-check error-reporting register banks and logs the results in an accounting file or data structure. This utility can be implemented in either of the following ways.

- A system daemon that polls the register banks on an infrequent basis, such as hourly or daily.
- A user-initiated application that polls the register banks and records the exceptions. Here, the actual polling service is provided by an operating-system driver or through the system call interface.
- An interrupt service routine servicing CMCI can read the MC banks and log the error. Please refer to Section 16.10.4.2 for guidelines on logging correctable machine checks.

Example 16-3 gives pseudocode for an error logging utility.

Example 16-3. Machine-Check Error Logging Pseudocode

```
Assume that execution is restartable;
IF the processor supports MCA
    THEN
    FOR each bank of machine-check registers
        DO
            READ IA32_MCi_STATUS;
            IF VAL flag in IA32_MCi_STATUS = 1
                THEN
                    IF ADDRV flag in IA32_MCi_STATUS = 1
                        THEN READ IA32_MCi_ADDR;
                    FI;
                    IF MISCV flag in IA32_MCi_STATUS = 1
                        THEN READ IA32_MCi_MISC;
                    FI;
                    IF MCIP flag in IA32_MCG_STATUS = 1
                        (* Machine-check exception is in progress *)
                        AND PCC flag in IA32_MCi_STATUS = 1
                        OR RIPV flag in IA32_MCG_STATUS = 0
                        (* execution is not restartable *)
                            THEN
                                RESTARTABILITY = FALSE;
                                return RESTARTABILITY to calling procedure;
                    FI;
                    Save time-stamp counter and processor ID;
                    Set IA32_MCi_STATUS to all 0s;
                    Execute serializing instruction (i.e., CPUID);
            FI;
        OD;
FI;
```

If the processor supports the machine-check architecture, the utility reads through the banks of error-reporting registers looking for valid register entries. It then saves the values of the IA32_MC*i*_STATUS, IA32_MC*i*_ADDR, IA32_MC*i*_MISC, and IA32_MCG_STATUS registers for each bank that is valid. The routine minimizes processing time by recording the raw data into a system data structure or file, reducing the overhead associated with polling. User utilities analyze the collected data in an off-line environment.

When the MCIP flag is set in the IA32_MCG_STATUS register, a machine-check exception is in progress and the machine-check exception handler has called the exception logging routine.

Once the logging process has been completed the exception-handling routine must determine whether execution can be restarted, which is usually possible when damage has not occurred (The PCC flag is clear, in the IA32_MC*i*_STATUS register) and when the processor can guarantee that execution is restartable (the RIPV flag is set in the IA32_MCG_STATUS register). If execution cannot be restarted, the system is not recoverable and the exception-handling routine should signal the console appropriately before returning the error status to the Operating System kernel for subsequent shutdown.

The machine-check architecture allows buffering of exceptions from a given error-reporting bank although the Pentium 4, Intel Xeon, Intel Atom, and P6 family processors do not implement this feature. The error logging routine should provide compatibility with future processors by reading each hardware error-reporting bank's IA32_MC*i*_STATUS register and then writing 0s to clear the OVER and VAL flags in this register. The error logging utility should re-read the IA32_MC*i*_STATUS register for the bank ensuring that the valid bit is clear. The processor will write the next error into the register bank and set the VAL flags.

Additional information that should be stored by the exception-logging routine includes the processor's time-stamp counter value, which provides a mechanism to indicate the frequency of exceptions. A multiprocessing operating system stores the identity of the processor node incurring the exception using a unique identifier, such as the processor's APIC ID (see Section 11.8, "Handling Interrupts").

The basic algorithm given in Example 16-3 can be modified to provide more robust recovery techniques. For example, software has the flexibility to attempt recovery using information unavailable to the hardware. Specifically, the machine-check exception handler can, after logging carefully analyze the error-reporting registers when the error-logging routine reports an error that does not allow execution to be restarted. These recovery techniques

can use external bus related model-specific information provided with the error report to localize the source of the error within the system and determine the appropriate recovery strategy.

16.10.4 Machine-Check Software Handler Guidelines for Error Recovery

16.10.4.1 Machine-Check Exception Handler for Error Recovery

When writing a machine-check exception (MCE) handler to support software recovery from Uncorrected Recoverable (UCR) errors, consider the following:

- When IA32_MCG_CAP [24] is zero, there are no recoverable errors supported and all machine-check are fatal exceptions. The logging of status and error information is therefore a baseline implementation requirement.
- When IA32_MCG_CAP [24] is 1, certain uncorrected errors called uncorrected recoverable (UCR) errors may be software recoverable. The handler can analyze the reported error information, and in some cases attempt to recover from the uncorrected error and continue execution.
- For processors on which CPUID reports DisplayFamily_DisplayModel as 06H_0EH and onward, an MCA signal is broadcast to all logical processors in the system (see CPUID instruction in Chapter 3, "Instruction Set Reference, A-L" in the *Intel® 64 and IA-32 Architectures Software Developer's Manual, Volume 2A*). Due to the potentially shared machine check MSR resources among the logical processors on the same package/core, the MCE handler may be required to synchronize with the other processors that received a machine check error and serialize access to the machine check registers when analyzing, logging, and clearing the information in the machine check registers.
  - On processors that indicate ability for local machine-check exception (MCG_LMCE_P), hardware can choose to report the error to only a single logical processor if system software has enabled LMCE by setting IA32_MCG_EXT_CTL[LMCE_EN] = 1 as outlined in Section 16.3.1.5.
- The VAL (valid) flag in each IA32_MCi_STATUS register indicates whether the error information in the register is valid. If this flag is clear, the registers in that bank do not contain valid error information and should not be checked.
- The MCE handler is primarily responsible for processing uncorrected errors. The UC flag in each IA32_MCi_Status register indicates whether the reported error was corrected (UC=0) or uncorrected (UC=1). The MCE handler can optionally log and clear the corrected errors in the MC banks if it can implement software algorithm to avoid the undesired race conditions with the CMCI or CMC polling handler.
- For uncorrectable errors, the EIPV flag in the IA32_MCG_STATUS register indicates (when set) that the instruction pointed to by the instruction pointer pushed onto the stack when the machine-check exception is generated is directly associated with the error. When this flag is cleared, the instruction pointed to may not be associated with the error.
- The MCIP flag in the IA32_MCG_STATUS register indicates whether a machine-check exception was generated. When a machine check exception is generated, it is expected that the MCIP flag in the IA32_MCG_STATUS register is set to 1. If it is not set, this machine check was generated by either an INT 18 instruction or some piece of hardware signaling an interrupt with vector 18.

When IA32_MCG_CAP [24] is 1, the following rules can apply when writing a machine check exception (MCE) handler to support software recovery:

- The PCC flag in each IA32_MCi_STATUS register indicates whether recovery from the error is possible for uncorrected errors (UC=1). If the PCC flag is set for enabled uncorrected errors (UC=1 and EN=1), recovery is not possible. When recovery is not possible, the MCE handler typically records the error information and signals the operating system to reset the system.
- The RIPV flag in the IA32_MCG_STATUS register indicates whether restarting the program execution from the instruction pointer saved on the stack for the machine check exception is possible. When the RIPV is set, program execution can be restarted reliably when recovery is possible. If the RIPV flag is not set, program execution cannot be restarted reliably. In this case the recovery algorithm may involve terminating the current program execution and resuming an alternate thread of execution upon return from the machine check handler when recovery is possible. When recovery is not possible, the MCE handler signals the operating system to reset the system.

- When the EN flag is zero but the VAL and UC flags are one in the IA32_MCi_STATUS register, the reported uncorrected error in this bank is not enabled. As uncorrected errors with the EN flag = 0 are not the source of machine check exceptions, the MCE handler should log and clear non-enabled errors when the S bit is set and should continue searching for enabled errors from the other IA32_MCi_STATUS registers. Note that when IA32_MCG_CAP [24] is 0, any uncorrected error condition (VAL =1 and UC=1) including the one with the EN flag cleared are fatal and the handler must signal the operating system to reset the system. For the errors that do not generate machine check exceptions, the EN flag has no meaning.
- When the VAL flag is one, the UC flag is one, the EN flag is one and the PCC flag is zero in the IA32_MCi_STATUS register, the error in this bank is an uncorrected recoverable (UCR) error. The MCE handler needs to examine the S flag and the AR flag to find the type of the UCR error for software recovery and determine if software error recovery is possible.
- When both the S and the AR flags are clear in the IA32_MCi_STATUS register for the UCR error (VAL=1, UC=1, EN=x and PCC=0), the error in this bank is an uncorrected no-action required error (UCNA). UCNA errors are uncorrected but do not require any OS recovery action to continue execution. These errors indicate that some data in the system is corrupt, but that data has not been consumed and may not be consumed. If that data is consumed a non-UCNA machine check exception will be generated. UCNA errors are signaled in the same way as corrected machine check errors and the CMCI and CMC polling handler is primarily responsible for handling UCNA errors. Like corrected errors, the MCA handler can optionally log and clear UCNA errors as long as it can avoid the undesired race condition with the CMCI or CMC polling handler. As UCNA errors are not the source of machine check exceptions, the MCA handler should continue searching for uncorrected or software recoverable errors in all other MC banks.
- When the S flag in the IA32_MCi_STATUS register is set for the UCR error ((VAL=1, UC=1, EN=1 and PCC=0), the error in this bank is software recoverable and it was signaled through a machine-check exception. The AR flag in the IA32_MCi_STATUS register further clarifies the type of the software recoverable errors.
- When the AR flag in the IA32_MCi_STATUS register is clear for the software recoverable error (VAL=1, UC=1, EN=1, PCC=0 and S=1), the error in this bank is a software recoverable action optional (SRAO) error. The MCE handler and the operating system can analyze the IA32_MCi_STATUS [15:0] to implement MCA error code specific optional recovery action, but this recovery action is optional. System software can resume the program execution from the instruction pointer saved on the stack for the machine check exception when the RIPV flag in the IA32_MCG_STATUS register is set.
- Even if the OVER flag in the IA32_MCi_STATUS register is set for the SRAO error (VAL=1, UC=1, EN=1, PCC=0, S=1 and AR=0), the MCE handler can take recovery action for the SRAO error logged in the IA32_MCi_STATUS register. Since the recovery action for SRAO errors is optional, restarting the program execution from the instruction pointer saved on the stack for the machine check exception is still possible for the overflowed SRAO error if the RIPV flag in the IA32_MCG_STATUS is set.
- When the AR flag in the IA32_MCi_STATUS register is set for the software recoverable error (VAL=1, UC=1, EN=1, PCC=0 and S=1), the error in this bank is a software recoverable action required (SRAR) error. The MCE handler and the operating system must take recovery action in order to continue execution after the machine-check exception. The MCA handler and the operating system need to analyze the IA32_MCi_STATUS [15:0] to determine the MCA error code specific recovery action. If no recovery action can be performed, the operating system must reset the system.
- When the OVER flag in the IA32_MCi_STATUS register is set for the SRAR error (VAL=1, UC=1, EN=1, PCC=0, S=1 and AR=1), the MCE handler cannot take recovery action as the information of the SRAR error in the IA32_MCi_STATUS register was potentially lost due to the overflow condition. Since the recovery action for SRAR errors must be taken, the MCE handler must signal the operating system to reset the system.
- When the MCE handler cannot find any uncorrected (VAL=1, UC=1 and EN=1) or any software recoverable errors (VAL=1, UC=1, EN=1, PCC=0 and S=1) in any of the IA32_MCi banks of the processors, this is an unexpected condition for the MCE handler and the handler should signal the operating system to reset the system.
- Before returning from the machine-check exception handler, software must clear the MCIP flag in the IA32_MCG_STATUS register. The MCIP flag is used to detect recursion. The machine-check architecture does not support recursion. When the processor receives a machine check when MCIP is set, it automatically enters the shutdown state.

Example 16-4 gives pseudocode for an MC exception handler that supports recovery of UCR.

Example 16-4. Machine-Check Error Handler Pseudocode Supporting UCR

```
MACHINE CHECK HANDLER:  (* Called from INT 18 handler *)
NOERROR = TRUE;
ProcessorCount = 0;
IF CPU supports MCA
    THEN
        RESTARTABILITY = TRUE;
        IF (Processor Family = 6 AND DisplayModel ≥ 0EH) OR (Processor Family > 6)
            THEN
                IF ( MCG_LMCE = 1)
                    MCA_BROADCAST = FALSE;
                ELSE
                    MCA_BROADCAST = TRUE;
                FI;
                Acquire SpinLock;
                ProcessorCount++;  (* Allowing one logical processor at a time to examine machine check registers *)
                CALL MCA ERROR PROCESSING; (* returns RESTARTABILITY and NOERROR *)
            ELSE
                MCA_BROADCAST = FALSE;
                (* Implement a rendezvous mechanism with the other processors if necessary *)
                CALL MCA ERROR PROCESSING;
        FI;
    ELSE (* Pentium(R) processor compatible *)
        READ P5_MC_ADDR
        READ P5_MC_TYPE;
        RESTARTABILITY = FALSE;
FI;

IF NOERROR = TRUE
    THEN
        IF NOT (MCG_RIPV = 1 AND MCG_EIPV = 0)
            THEN
                RESTARTABILITY = FALSE;
        FI
FI;

IF RESTARTABILITY = FALSE
    THEN
        Report RESTARTABILITY to console;
        Reset system;
FI;

IF MCA_BROADCAST = TRUE
    THEN
        IF ProcessorCount = MAX_PROCESSORS
          AND NOERROR = TRUE
            THEN
                Report RESTARTABILITY to console;
                Reset system;
        FI;
        Release SpinLock;
        Wait till ProcessorCount = MAX_PROCESSRS on system;
        (* implement a timeout and abort function if necessary *)
FI;
CLEAR IA32_MCG_STATUS;
RESUME Execution;
(* End of MACHINE CHECK HANDLER*)


MCA ERROR PROCESSING:    (* MCA Error Processing Routine called from MCA Handler *)
IF MCIP flag in IA32_MCG_STATUS = 0
    THEN (* MCIP=0 upon MCA is unexpected *)
        RESTARTABILITY = FALSE;
FI;
```

```
FOR each bank of machine-check registers
    DO
        CLEAR_MC_BANK = FALSE;
        READ IA32_MCi_STATUS;
        IF VAL Flag in IA32_MCi_STATUS = 1
            THEN
                IF UC Flag in IA32_MCi_STATUS = 1
                    THEN
                        IF Bit 24 in IA32_MCG_CAP = 0
                            THEN (* the processor does not support software error recovery *)
                                RESTARTABILITY = FALSE;
                                NOERROR = FALSE;
                                GOTO LOG MCA REGISTER;
                        FI;
                        (* the processor supports software error recovery *)
                        IF EN Flag in IA32_MCi_STATUS = 0 AND OVER Flag in IA32_MCi_STATUS=0
                            THEN (* It is a spurious MCA Log. Log and clear the register *)
                                CLEAR_MC_BANK = TRUE;
                                GOTO LOG MCA REGISTER;
                        FI;
                        IF PCC = 1 and EN = 1 in IA32_MCi_STATUS
                            THEN (* processor context might have been corrupted *)
                                RESTARTABILITY = FALSE;
                            ELSE (* It is a uncorrected recoverable (UCR) error *)
                                IF S Flag in IA32_MCi_STATUS = 0
                                    THEN
                                        IF AR Flag in IA32_MCi_STATUS = 0
                                            THEN (* It is a uncorrected no action required (UCNA) error *)
                                                GOTO CONTINUE; (* let CMCI and CMC polling handler to process *)
                                            ELSE
                                                RESTARTABILITY = FALSE; (* S=0, AR=1 is illegal *)
                                        FI
                                FI;
                                IF RESTARTABILITY = FALSE
                                    THEN (* no need to take recovery action if RESTARTABILITY is already false *)
                                        NOERROR = FALSE;
                                        GOTO LOG MCA REGISTER;
                                FI;
                                (* S in IA32_MCi_STATUS = 1 *)
                                IF AR Flag in IA32_MCi_STATUS = 1
                                    THEN (* It is a software recoverable and action required (SRAR) error *)
                                        IF OVER Flag in IA32_MCi_STATUS = 1
                                            THEN
                                                RESTARTABILITY = FALSE;
                                                NOERROR = FALSE;
                                                GOTO LOG MCA REGISTER;
                                        FI
                                        IF MCACOD Value in IA32_MCi_STATUS is recognized
                                           AND Current Processor is an Affected Processor
                                            THEN
                                                Implement MCACOD specific recovery action;
                                                CLEAR_MC_BANK = TRUE;
                                            ELSE
                                                RESTARTABILITY = FALSE;
                                        FI;
                                    ELSE (* It is a software recoverable and action optional (SRAO) error *)
                                        IF OVER Flag in IA32_MCi_STATUS = 0 AND
                                         MCACOD in IA32_MCi_STATUS is recognized
                                            THEN
                                                Implement MCACOD specific recovery action;
                                        FI;
                                        CLEAR_MC_BANK = TRUE;
                                FI; AR
                        FI; PCC
                        NOERROR = FALSE;
```

```
                    GOTO LOG MCA REGISTER;
                ELSE  (* It is a corrected error; continue to the next IA32_MCi_STATUS *)
                    GOTO CONTINUE;
            FI; UC
        FI; VAL
LOG MCA REGISTER:
        SAVE IA32_MCi_STATUS;
        If MISCV in IA32_MCi_STATUS
            THEN
                SAVE IA32_MCi_MISC;
        FI;
        IF ADDRV in IA32_MCi_STATUS
            THEN
                SAVE IA32_MCi_ADDR;
        FI;
        IF CLEAR_MC_BANK = TRUE
            THEN
                SET all 0 to IA32_MCi_STATUS;
                If MISCV in IA32_MCi_STATUS
                    THEN
                        SET all 0 to IA32_MCi_MISC;
                FI;
                IF ADDRV in IA32_MCi_STATUS
                    THEN
                        SET all 0 to IA32_MCi_ADDR;
                FI;
        FI;
        CONTINUE:
    OD;
( *END FOR *)
RETURN;
(* End of MCA ERROR PROCESSING*)
```

16.10.4.2 Corrected Machine-Check Handler for Error Recovery

When writing a corrected machine check handler, which is invoked as a result of CMCI or called from an OS CMC Polling dispatcher, consider the following:

- The VAL (valid) flag in each IA32_MCi_STATUS register indicates whether the error information in the register is valid. If this flag is clear, the registers in that bank does not contain valid error information and does not need to be checked.
- The CMCI or CMC polling handler is responsible for logging and clearing corrected errors. The UC flag in each IA32_MCi_Status register indicates whether the reported error was corrected (UC=0) or not (UC=1).
- When IA32_MCG_CAP [24] is one, the CMC handler is also responsible for logging and clearing uncorrected no-action required (UCNA) errors. When the UC flag is one but the PCC, S, and AR flags are zero in the IA32_MCi_STATUS register, the reported error in this bank is an uncorrected no-action required (UCNA) error. In cases when SRAO error are signaled as UCNA error via CMCI, software can perform recovery for those errors identified in Table 16-16.
- In addition to corrected errors and UCNA errors, the CMC handler optionally logs uncorrected (UC=1 and PCC=1), software recoverable machine check errors (UC=1, PCC=0 and S=1), but should avoid clearing those errors from the MC banks. Clearing these errors may result in accidentally removing these errors before these errors are actually handled and processed by the MCE handler for attempted software error recovery.

Example 16-5 gives pseudocode for a CMCI handler with UCR support.

Example 16-5. Corrected Error Handler Pseudocode with UCR Support

```
Corrected Error HANDLER:  (* Called from CMCI handler or OS CMC Polling Dispatcher*)
IF CPU supports MCA
    THEN
        FOR each bank of machine-check registers
            DO
                READ IA32_MCi_STATUS;
                IF VAL flag in IA32_MCi_STATUS = 1
                    THEN
                        IF UC Flag in IA32_MCi_STATUS = 0 (* It is a corrected error *)
                            THEN
                                GOTO LOG CMC ERROR;
                            ELSE
                                IF Bit 24 in IA32_MCG_CAP = 0
                                    THEN
                                        GOTO CONTINUE;
                                FI;
                                IF S Flag in IA32_MCi_STATUS = 0 AND AR Flag in IA32_MCi_STATUS = 0
                                    THEN (* It is a uncorrected no action required error *)
                                        GOTO LOG CMC ERROR
                                FI
                                IF EN Flag in IA32_MCi_STATUS = 0
                                    THEN (* It is a spurious MCA error *)
                                        GOTO LOG CMC ERROR
                                FI;
                        FI;
                FI;
                GOTO CONTINUE;
            LOG CMC ERROR:
                SAVE IA32_MCi_STATUS;
                If MISCV Flag in IA32_MCi_STATUS
                    THEN
                        SAVE IA32_MCi_MISC;
                        SET all 0 to IA32_MCi_MISC;
                FI;
                IF ADDRV Flag in IA32_MCi_STATUS
                    THEN
                        SAVE IA32_MCi_ADDR;
                        SET all 0 to IA32_MCi_ADDR
                FI;
                SET all 0 to IA32_MCi_STATUS;
                CONTINUE:
            OD;
    ( *END FOR *)
FI;
```

CHAPTER 17
INTERPRETING MACHINE CHECK ERROR CODES

Encoding of the model-specific and other information fields is different across processor families. The differences are documented in the following sections.

17.1 INCREMENTAL DECODING INFORMATION: PROCESSOR FAMILY 06H, MACHINE ERROR CODES FOR MACHINE CHECK

This section provides information for interpreting additional model-specific fields for external bus errors relating to processor family 06H. The references to processor family 06H refers to only IA-32 processors with CPUID signatures listed in Table 17-1.

Table 17-1. CPUID DisplayFamily_DisplayModel Signatures for Processor Family 06H

DisplayFamily_DisplayModel	Processor Families/Processor Number Series
06_0EH	Intel® Core™ Duo processor, Intel® Core™ Solo processor
06_0DH	Intel Pentium M processor
06_09H	Intel Pentium M processor
06_7H, 06_08H, 06_0AH, 06_0BH	Intel Pentium III Xeon Processor, Intel Pentium III Processor
06_03H, 06_05H	Intel Pentium II Xeon Processor, Intel Pentium II Processor
06_01H	Intel Pentium Pro Processor

These errors are reported in the IA32_MCi_STATUS MSRs. They are reported architecturally as compound errors with a general form of **0000 1PPT RRRR IILL** in the MCA error code field. See Chapter 16 for information on the interpretation of compound error codes. Incremental decoding information is listed in Table 17-2.

Table 17-2. Incremental Decoding Information: Processor Family 06H Machine Error Codes for Machine Check

Type	Bit No.	Bit Function	Bit Description
MCA Error Codes[1]	15:0		
Model Specific Errors	18:16	Reserved	Reserved
	24:19	Bus Queue Request Type	000000: BQ_DCU_READ_TYPE error. 000010: BQ_IFU_DEMAND_TYPE error. 000011: BQ_IFU_DEMAND_NC_TYPE error. 000100: BQ_DCU_RFO_TYPE error. 000101: BQ_DCU_RFO_LOCK_TYPE error. 000110: BQ_DCU_ITOM_TYPE error. 001000: BQ_DCU_WB_TYPE error. 001010: BQ_DCU_WCEVICT_TYPE error. 001011: BQ_DCU_WCLINE_TYPE error. 001100: BQ_DCU_BTM_TYPE error.

Table 17-2. Incremental Decoding Information: Processor Family 06H Machine Error Codes for Machine Check

Type	Bit No.	Bit Function	Bit Description
			001101: BQ_DCU_INTACK_TYPE error. 001110: BQ_DCU_INVALL2_TYPE error. 001111: BQ_DCU_FLUSHL2_TYPE error. 010000: BQ_DCU_PART_RD_TYPE error. 010010: BQ_DCU_PART_WR_TYPE error. 010100: BQ_DCU_SPEC_CYC_TYPE error. 011000: BQ_DCU_IO_RD_TYPE error. 011001: BQ_DCU_IO_WR_TYPE error. 011100: BQ_DCU_LOCK_RD_TYPE error. 011110: BQ_DCU_SPLOCK_RD_TYPE error. 011101: BQ_DCU_LOCK_WR_TYPE error.
	27:25	Bus Queue Error Type	000: BQ_ERR_HARD_TYPE error. 001: BQ_ERR_DOUBLE_TYPE error. 010: BQ_ERR_AERR2_TYPE error. 100: BQ_ERR_SINGLE_TYPE error. 101: BQ_ERR_AERR1_TYPE error.
	28	FRC Error	1 if FRC error active.
	29	BERR	1 if BERR is driven.
	30	Internal BINIT	1 if BINIT driven for this processor.
	31	Reserved	Reserved
Other Information	34:32	Reserved	Reserved
	35	External BINIT	1 if BINIT is received from external bus.
	36	Response Parity Error	This bit is asserted in IA32_MC*i*_STATUS if this component has received a parity error on the RS[2:0]# pins for a response transaction. The RS signals are checked by the RSP# external pin.
	37	Bus BINIT	This bit is asserted in IA32_MC*i*_STATUS if this component has received a hard error response on a split transaction one access that has needed to be split across the 64-bit external bus interface into two accesses).
	38	Timeout BINIT	This bit is asserted in IA32_MC*i*_STATUS if this component has experienced a ROB time-out, which indicates that no micro-instruction has been retired for a predetermined period of time. A ROB time-out occurs when the 15-bit ROB time-out counter carries a 1 out of its high order bit. [2] The timer is cleared when a micro-instruction retires, an exception is detected by the core processor, RESET is asserted, or when a ROB BINIT occurs. The ROB time-out counter is prescaled by the 8-bit PIC timer which is a divide by 128 of the bus clock (the bus clock is 1:2, 1:3, 1:4 of the core clock[3]). When a carry out of the 8-bit PIC timer occurs, the ROB counter counts up by one. While this bit is asserted, it cannot be overwritten by another error.
	41:39	Reserved	Reserved
	42	Hard Error	This bit is asserted in IA32_MC*i*_STATUS if this component has initiated a bus transactions which has received a hard error response. While this bit is asserted, it cannot be overwritten.
	43	IERR	This bit is asserted in IA32_MC*i*_STATUS if this component has experienced a failure that causes the IERR pin to be asserted. While this bit is asserted, it cannot be overwritten.

Table 17-2. Incremental Decoding Information: Processor Family 06H Machine Error Codes for Machine Check

Type	Bit No.	Bit Function	Bit Description
	44	AERR	This bit is asserted in IA32_MC*i*_STATUS if this component has initiated 2 failing bus transactions which have failed due to Address Parity Errors AERR asserted). While this bit is asserted, it cannot be overwritten.
	45	UECC	The Uncorrectable ECC error bit is asserted in IA32_MC*i*_STATUS for uncorrected ECC errors. While this bit is asserted, the ECC syndrome field will not be overwritten.
	46	CECC	The correctable ECC error bit is asserted in IA32_MC*i*_STATUS for corrected ECC errors.
	54:47	ECC Syndrome	The ECC syndrome field in IA32_MCi_STATUS contains the 8-bit ECC syndrome only if the error was a correctable/uncorrectable ECC error and there wasn't a previous valid ECC error syndrome logged in IA32_MCi_STATUS. A previous valid ECC error in IA32_MCi_STATUS is indicated by IA32_MCi_STATUS.bit45 uncorrectable error occurred) being asserted. After processing an ECC error, machine check handling software should clear IA32_MCi_STATUS.bit45 so that future ECC error syndromes can be logged.
	56:55	Reserved	Reserved
Status Register Validity Indicators[1]	63:57		

NOTES:

1. These fields are architecturally defined. Refer to Chapter 16, "Machine-Check Architecture," for more information.
2. For processors with a CPUID signature of 06_0EH, a ROB time-out occurs when the 23-bit ROB time-out counter carries a 1 out of its high order bit.
3. For processors with a CPUID signature of 6_06_60H and later, the PIC timer will count crystal clock cycles.

17.2 INCREMENTAL DECODING INFORMATION: INTEL® CORE™ 2 PROCESSOR FAMILY, MACHINE ERROR CODES FOR MACHINE CHECK

Table 17-4 provides information for interpreting additional model-specific fields for external bus errors relating to processors based on Intel® Core™ microarchitecture, which implements the P4 bus specification. Table 17-3 lists the CPUID signatures for Intel 64 processors that are covered by Table 17-4. These errors are reported in the IA32_MCi_STATUS MSRs. They are reported architecturally as compound errors with a general form of **0000 1PPT RRRR IILL** in the MCA error code field. See Chapter 16 for information on the interpretation of compound error codes.

Table 17-3. CPUID DisplayFamily_DisplayModel Signatures for Processors Based on Intel® Core™ Microarchitecture

DisplayFamily_DisplayModel	Processor Families/Processor Number Series
06_1DH	Intel® Xeon® Processor 7400 series
06_17H	Intel® Xeon® Processor 5200, 5400 series, Intel® Core™ 2 Quad processor Q9650
06_0FH	Intel® Xeon® Processor 3000, 3200, 5100, 5300, 7300 series, Intel® Core™ 2 Quad, Intel® Core™ 2 Extreme, Intel® Core™ 2 Duo processors, Intel Pentium dual-core processors

Table 17-4. Incremental Bus Error Codes of Machine Check for Processors Based on Intel® Core™ Microarchitecture

Type	Bit No.	Bit Function	Bit Description
MCA Error Codes[1]	15:0		
Model Specific Errors	18:16	Reserved	Reserved
	24:19	Bus Queue Request Type	'000001: BQ_PREF_READ_TYPE error. 000000: BQ_DCU_READ_TYPE error. 000010: BQ_IFU_DEMAND_TYPE error 000011: BQ_IFU_DEMAND_NC_TYPE error. 000100: BQ_DCU_RFO_TYPE error. 000101: BQ_DCU_RFO_LOCK_TYPE error. 000110: BQ_DCU_ITOM_TYPE error. 001000: BQ_DCU_WB_TYPE error. 001010: BQ_DCU_WCEVICT_TYPE error. 001011: BQ_DCU_WCLINE_TYPE error. 001100: BQ_DCU_BTM_TYPE error. 001101: BQ_DCU_INTACK_TYPE error. 001110: BQ_DCU_INVALL2_TYPE error. 001111: BQ_DCU_FLUSHL2_TYPE error. 010000: BQ_DCU_PART_RD_TYPE error. 010010: BQ_DCU_PART_WR_TYPE error. 010100: BQ_DCU_SPEC_CYC_TYPE error. 011000: BQ_DCU_IO_RD_TYPE error. 011001: BQ_DCU_IO_WR_TYPE error. 011100: BQ_DCU_LOCK_RD_TYPE error. 011110: BQ_DCU_SPLOCK_RD_TYPE error. 011101: BQ_DCU_LOCK_WR_TYPE error. 100100: BQ_L2_WI_RFO_TYPE error. 100110: BQ_L2_WI_ITOM_TYPE error.
	27:25	Bus Queue Error Type	'001: Address Parity Error. '010: Response Hard Error. '011: Response Parity Error.
	28	MCE Driven	1 if MCE is driven.
	29	MCE Observed	1 if MCE is observed.
	30	Internal BINIT	1 if BINIT driven for this processor.
	31	BINIT Observed	1 if BINIT is observed for this processor.
Other Information	33:32	Reserved	Reserved
	34	PIC and FSB Data Parity	Data Parity detected on either PIC or FSB access.
	35	Reserved	Reserved
	36	Response Parity Error	This bit is asserted in IA32_MC*i*_STATUS if this component has received a parity error on the RS[2:0]# pins for a response transaction. The RS signals are checked by the RSP# external pin.

Table 17-4. Incremental Bus Error Codes of Machine Check for Processors Based on Intel® Core™ Microarchitecture (Contd.)

Type	Bit No.	Bit Function	Bit Description
	37	FSB Address Parity	Address parity error detected: 1: Address parity error detected. 0: No address parity error.
	38	Timeout BINIT	This bit is asserted in IA32_MC*i*_STATUS if this component has experienced a ROB time-out, which indicates that no micro-instruction has been retired for a predetermined period of time. A ROB time-out occurs when the 23-bit ROB time-out counter carries a 1 out of its high order bit. The timer is cleared when a micro-instruction retires, an exception is detected by the core processor, RESET is asserted, or when a ROB BINIT occurs. The ROB time-out counter is prescaled by the 8-bit PIC timer which is a divide by 128 of the bus clock the bus clock is 1:2, 1:3, 1:4 of the core clock). When a carry out of the 8-bit PIC timer occurs, the ROB counter counts up by one. While this bit is asserted, it cannot be overwritten by another error.
	41:39	Reserved	Reserved
	42	Hard Error	This bit is asserted in IA32_MC*i*_STATUS if this component has initiated a bus transactions which has received a hard error response. While this bit is asserted, it cannot be overwritten.
	43	IERR	This bit is asserted in IA32_MC*i*_STATUS if this component has experienced a failure that causes the IERR pin to be asserted. While this bit is asserted, it cannot be overwritten.
	44	Reserved	Reserved
	45	Reserved	Reserved
	46	Reserved	Reserved
	54:47	Reserved	Reserved
	56:55	Reserved	Reserved.
Status Register Validity Indicators[1]	63:57		

NOTES:

1. These fields are architecturally defined. Refer to Chapter 16, "Machine-Check Architecture," for more information.

17.2.1 Model-Specific Machine Check Error Codes for Intel® Xeon® Processor 7400 Series

The Intel® Xeon® processor 7400 series has machine check register banks that generally follow the description of Chapter 16 and Section 17.2. Additional error codes specific to the Intel Xeon processor 7400 series are described in this section.

MC4_STATUS[63:0] is the main error logging for the processor's L3 and front side bus errors for the Intel Xeon processor 7400 series. It supports the L3 Errors, Bus and Interconnect Errors Compound Error Codes in the MCA Error Code Field.

17.2.1.1 Processor Machine Check Status Register, Incremental MCA Error Code Definition

The Intel Xeon processor 7400 series uses compound MCA Error Codes for logging its Bus internal machine check errors, L3 Errors, and Bus/Interconnect Errors. It defines incremental Machine Check error types (IA32_MC6_STATUS[15:0]) beyond those defined in Chapter 16. Table 17-5 lists these incremental MCA error code types that apply to IA32_MC6_STATUS. Error code details are specified in MC6_STATUS [31:16] (see Section 17.2.2), the "Model Specific Error Code" field. The information in the "Other_Info" field (MC4_STATUS[56:32]) is common to the three processor error types. It contains a correctable event count and specifies the MC6_MISC register format.

Table 17-5. Incremental MCA Error Code Types for Intel® Xeon® Processor 7400

Processor MCA_Error_Code (MC6_STATUS[15:0])			
Type	**Error Code**	**Binary Encoding**	**Meaning**
C	Internal Error	0000 0100 0000 0000	Internal Error Type Code.
B	Bus and Interconnect Error	0000 100x 0000 1111	Not used but this encoding is reserved for compatibility with other MCA implementations.
		0000 101x 0000 1111	Not used but this encoding is reserved for compatibility with other MCA implementations.
		0000 110x 0000 1111	Not used but this encoding is reserved for compatibility with other MCA implementations.
		0000 1110 0000 1111	Bus and Interconnection Error Type Code.
		0000 1111 0000 1111	Not used but this encoding is reserved for compatibility with other MCA implementations.

The **Bold faced** binary encodings are the only encodings used by the processor for MC4_STATUS[15:0].

17.2.2 Intel® Xeon® Processor 7400 Model Specific Error Code Field

17.2.2.1 Processor Model Specific Error Code Field, Type B: Bus and Interconnect Error Codes

The Model Specific Error Code field in MC6_STATUS (bits 31:16) is defined in Table 17-6.

Table 17-6. Type B: Bus and Interconnect Error Codes

Bit Number	Sub-Field Name	Description
16	FSB Request Parity	Parity error detected during FSB request phase.
19:17	Reserved	Reserved
20	FSB Hard Fail Response	"Hard Failure" response received for a local transaction.
21	FSB Response Parity	Parity error on FSB response field detected.
22	FSB Data Parity	FSB data parity error on inbound data detected.
31:23	Reserved	Reserved

17.2.2.2 Processor Model Specific Error Code Field, Type C: Cache Bus Controller Error Codes

Table 17-7. Type C: Cache Bus Controller Error Codes

MC4_STATUS[31:16] (MSCE) Value	Error Description
0000_0000_0000_0001 0001H	Inclusion Error from Core 0.
0000_0000_0000_0010 0002H	Inclusion Error from Core 1.
0000_0000_0000_0011 0003H	Write Exclusive Error from Core 0.
0000_0000_0000_0100 0004H	Write Exclusive Error from Core 1.
0000_0000_0000_0101 0005H	Inclusion Error from FSB.
0000_0000_0000_0110 0006H	SNP Stall Error from FSB.
0000_0000_0000_0111 0007H	Write Stall Error from FSB.
0000_0000_0000_1000 0008H	FSB Arb Timeout Error.
0000_0000_0000_1010 000AH	Inclusion Error from Core 2.
0000_0000_0000_1011 000BH	Write Exclusive Error from Core 2.
0000_0010_0000_0000 0200H	Internal Timeout Error.
0000_0011_0000_0000 0300H	Internal Timeout Error.
0000_0100_0000_0000 0400H	Intel® Cache Safe Technology Queue Full Error or Disabled-ways-in-a-set overflow.
0000_0101_0000_0000 0500H	Quiet cycle Timeout Error (correctable).
1100_0000_0000_0010 C002H	Correctable ECC event on outgoing Core 0 data.
1100_0000_0000_0100 C004H	Correctable ECC event on outgoing Core 1 data.
1100_0000_0000_1000 C008H	Correctable ECC event on outgoing Core 2 data.
1110_0000_0000_0010 E002H	Uncorrectable ECC error on outgoing Core 0 data.
1110_0000_0000_0100 E004H	Uncorrectable ECC error on outgoing Core 1 data.
1110_0000_0000_1000 E008H	Uncorrectable ECC error on outgoing Core 2 data.
— All other encodings —	Reserved

17.3 INCREMENTAL DECODING INFORMATION: INTEL® XEON® PROCESSOR 3400, 3500, 5500 SERIES, MACHINE ERROR CODES FOR MACHINE CHECK

Table 17-8 through Table 17-12 provide information for interpreting additional model-specific fields for memory controller errors relating to the Intel® Xeon® processor 3400, 3500, 5500 series with CPUID DisplayFamily_DisplaySignature 06_1AH, which supports Intel® QuickPath Interconnect links. Incremental MC error codes related to the Intel QPI links are reported in the register banks IA32_MC0 and IA32_MC1, incremental error codes for internal machine check are reported in the register bank IA32_MC7, and incremental error codes for the memory controller unit are reported in the register bank IA32_MC8.

17.3.1 Intel® QPI Machine Check Errors

Table 17-8. Intel® QPI Machine Check Error Codes for IA32_MC0_STATUS and IA32_MC1_STATUS

Type	Bit No.	Bit Function	Bit Description
MCA Error Codes[1]	15:0	MCACOD	Bus error format: 1PPTRRRRIILL
Model Specific Errors	16	Header Parity	If 1, QPI Header had bad parity.
	17	Data Parity	If 1, QPI Data packet had bad parity.
	18	Retries Exceeded	If 1, the number of QPI retries was exceeded.
	19	Received Poison	if 1, received a data packet that was marked as poisoned by the sender.
	21:20	Reserved	Reserved
	22	Unsupported Message	If 1, QPI received a message encoding it does not support.
	23	Unsupported Credit	If 1, QPI credit type is not supported.
	24	Receive Flit Overrun	If 1, sender sent too many QPI flits to the receiver.
	25	Received Failed Response	If 1, indicates that sender sent a failed response to receiver.
	26	Receiver Clock Jitter	If 1, clock jitter detected in the internal QPI clocking.
	56:27	Reserved	Reserved
Status Register Validity Indicators[1]	63:57		

NOTES:
1. These fields are architecturally defined. Refer to Chapter 16, "Machine-Check Architecture," for more information.

Table 17-9. Intel® QPI Machine Check Error Codes for IA32_MC0_MISC and IA32_MC1_MISC

Type	Bit No.	Bit Function	Bit Description
Model Specific Errors[1]	7:0	QPI Opcode	Message class and opcode from the packet with the error.
	13:8	RTID	QPI Request Transaction ID.
	15:14	Reserved	Reserved
	18:16	RHNID	QPI Requestor/Home Node ID.
	23:19	Reserved	Reserved
	24	IIB	QPI Interleave/Head Indication Bit.

NOTES:
1. Which of these fields are valid depends on the error type.

17.3.2 Internal Machine Check Errors

Table 17-10. Machine Check Error Codes for IA32_MC7_STATUS

Type	Bit No.	Bit Function	Bit Description
MCA Error Codes[1]	15:0	MCACOD	
Model Specific Errors	23:16	Reserved	Reserved
	31:24	Reserved, except for the following	00H: No error. 03H: Reset firmware did not complete. 08H: Received an invalid CMPD. 0AH: Invalid Power Management Request. 0DH: Invalid S-state transition. 11H: VID controller does not match POC controller selected. 1AH: MSID from POC does not match CPU MSID.
	56:32	Reserved	Reserved
Status Register Validity Indicators[1]	63:57		

NOTES:

1. These fields are architecturally defined. Refer to Chapter 16, "Machine-Check Architecture," for more information.

17.3.3 Memory Controller Errors

Table 17-11. Incremental Memory Controller Error Codes of Machine Check for IA32_MC8_STATUS

Type	Bit No.	Bit Function	Bit Description
MCA Error Codes[1]	15:0	MCACOD	Memory error format: 1MMMCCCC
Model Specific Errors	16	Read ECC Error	If 1, ECC occurred on a read.
	17	RAS ECC Error	If 1, ECC occurred on a scrub.
	18	Write Parity Error	If 1, bad parity on a write.
	19	Redundancy Loss	if 1, error in half of redundant memory.
	20	Reserved	Reserved
	21	Memory Range Error	If 1, memory access out of range.
	22	RTID Out of Range	If 1, Internal ID invalid.
	23	Address Parity Error	If 1, bad address parity.
	24	Byte Enable Parity Error	If 1, bad enable parity.
Other Information	37:25	Reserved	Reserved
	52:38	CORE_ERR_CNT	Corrected error count.
	56:53	Reserved	Reserved
Status Register Validity Indicators[1]	63:57		

NOTES:

1. These fields are architecturally defined. Refer to Chapter 16, "Machine-Check Architecture," for more information.

Table 17-12. Incremental Memory Controller Error Codes of Machine Check for IA32_MC8_MISC

Type	Bit No.	Bit Function	Bit Description
Model Specific Errors[1]	7:0	RTID	Transaction Tracker ID.
	15:8	Reserved	Reserved
	17:16	DIMM	DIMM ID which received the error.
	19:18	Channel	Channel ID which received the error.
	31:20	Reserved	Reserved
	63:32	Syndrome	ECC Syndrome.

NOTES:
1. Which of these fields are valid depends on the error type.

17.4 INCREMENTAL DECODING INFORMATION: INTEL® XEON® PROCESSOR E5 FAMILY, MACHINE ERROR CODES FOR MACHINE CHECK

Table 17-13 through Table 17-15 provide information for interpreting additional model-specific fields for memory controller errors relating to the Intel® Xeon® processor E5 Family with CPUID DisplayFamily_DisplaySignature 06_2DH, which supports Intel QuickPath Interconnect links. Incremental MC error codes related to the Intel QPI links are reported in the register banks IA32_MC6 and IA32_MC7, incremental error codes for internal machine check error from PCU controller are reported in the register bank IA32_MC4, and incremental error codes for the memory controller unit are reported in the register banks IA32_MC8—IA32_MC11.

17.4.1 Internal Machine Check Errors

Table 17-13. Machine Check Error Codes for IA32_MC4_STATUS

Type	Bit No.	Bit Function	Bit Description
MCA Error Codes[1]	15:0	MCACOD	
Model Specific Errors	19:16	Reserved, except for the following	0000b: No Error 0001b: Non_IMem_Sel 0010b: I_Parity_Error 0011b: Bad_OpCode 0100b: I_Stack_Underflow 0101b: I_Stack_Overflow 0110b: D_Stack_Underflow 0111b: D_Stack_Overflow 1000b: Non-DMem_Sel 1001b: D_Parity_Error

Table 17-13. Machine Check Error Codes for IA32_MC4_STATUS (Contd.)

Type	Bit No.	Bit Function	Bit Description
	23:20	Reserved	Reserved
	31:24	Reserved, except for the following	00H: No Error 0DH: MC_IMC_FORCE_SR_S3_TIMEOUT 0EH: MC_CPD_UNCPD_ST_TIMEOUT 0FH: MC_PKGS_SAFE_WP_TIMEOUT 43H: MC_PECI_MAILBOX_QUIESCE_TIMEOUT 5CH: MC_MORE_THAN_ONE_LT_AGENT 60H: MC_INVALID_PKGS_REQ_PCH 61H: MC_INVALID_PKGS_REQ_QPI 62H: MC_INVALID_PKGS_RES_QPI 63H: MC_INVALID_PKGC_RES_PCH 64H: MC_INVALID_PKG_STATE_CONFIG 70H: MC_WATCHDG_TIMEOUT_PKGC_SECONDARY 71H: MC_WATCHDG_TIMEOUT_PKGC_MAIN 72H: MC_WATCHDG_TIMEOUT_PKGS_MAIN 7AH: MC_HA_FAILSTS_CHANGE_DETECTED 81H: MC_RECOVERABLE_DIE_THERMAL_TOO_HOT
	56:32	Reserved	Reserved
Status Register Validity Indicators[1]	63:57		

NOTES:
1. These fields are architecturally defined. Refer to Chapter 16, "Machine-Check Architecture," for more information.

17.4.2 Intel® QPI Machine Check Errors

Table 17-14. Intel® QPI MC Error Codes for IA32_MC6_STATUS and IA32_MC7_STATUS

Type	Bit No.	Bit Function	Bit Description
MCA Error Codes[1]	15:0	MCACOD	Bus error format: 1PPTRRRRIILL
Model Specific Errors	56:16	Reserved	Reserved
Status Register Validity Indicators[1]	63:57		

NOTES:
1. These fields are architecturally defined. Refer to Chapter 16, "Machine-Check Architecture," for more information.

17.4.3 Integrated Memory Controller Machine Check Errors

MC error codes associated with integrated memory controllers are reported in the IA32_MC8_STATUS–IA32_MC11_STATUS MSRs. The supported error codes follow the architectural MCACOD definition type **1MMMCCCC**; see Chapter 16, "Machine-Check Architecture." MSR_ERROR_CONTROL.[bit 1] can enable additional information logging of the IMC. The additional error information logged by the IMC is stored in the IA32_MCi_STATUS and IA32_MCi_MISC, where i = 8, 11.

Table 17-15. Intel IMC MC Error Codes for IA32_MCi_STATUS (i= 8, 11)

Type	Bit No.	Bit Function	Bit Description
MCA Error Codes[1]	15:0	MCACOD	Bus error format: 1PPTRRRRIILL
Model Specific Errors	31:16	Reserved, except for the following	001H: Address parity error. 002H: HA Wrt buffer Data parity error. 004H: HA Wrt byte enable parity error. 008H: Corrected patrol scrub error. 010H: Uncorrected patrol scrub error. 020H: Corrected spare error. 040H: Uncorrected spare error.
	36:32	Other Info	When MSR_ERROR_CONTROL.[1] is set, allows the iMC to log first device error when corrected error is detected during normal read.
	37	Reserved	Reserved
	56:38		See Chapter 16, "Machine-Check Architecture."
Status Register Validity Indicators[1]	63:57		

NOTES:

1. These fields are architecturally defined. Refer to Chapter 16, "Machine-Check Architecture," for more information.

Table 17-16. Intel IMC MC Error Codes for IA32_MCi_MISC (i= 8, 11)

Type	Bit No.	Bit Function	Bit Description
MCA Addr Info[1]	8:0		See Chapter 16, "Machine-Check Architecture."
Model Specific Errors	13:9		▪ When MSR_ERROR_CONTROL.[1] is set, allows the iMC to log second device error when corrected error is detected during normal read. ▪ Otherwise, contains parity error if MCi_Status indicates HA_WB_Data or HA_W_BE parity error.
	29:14	ErrMask_1stErrDev	When MSR_ERROR_CONTROL.[1] is set, allows the iMC to log first-device error bit mask.
	45:30	ErrMask_2ndErrDev	When MSR_ERROR_CONTROL.[1] is set, allows the iMC to log second-device error bit mask.
	50:46	FailRank_1stErrDev	When MSR_ERROR_CONTROL.[1] is set, allows the iMC to log first-device error failing rank.
	55:51	FailRank_2ndErrDev	When MSR_ERROR_CONTROL.[1] is set, allows the iMC to log second-device error failing rank.
	58:56	Reserved	Reserved
	61:59	Reserved	Reserved
	62	Valid_1stErrDev	When MSR_ERROR_CONTROL.[1] is set, indicates the iMC has logged valid data from the first correctable error in a memory device.
	63	Valid_2ndErrDev	When MSR_ERROR_CONTROL.[1] is set, indicates the iMC has logged valid data due to a second correctable error in a memory device. Use this information only after there is valid first error information indicated by bit 62.

NOTES:

1. These fields are architecturally defined. Refer to Chapter 16, "Machine-Check Architecture," for more information.

17.5 INCREMENTAL DECODING INFORMATION: INTEL® XEON® PROCESSOR E5 V2 AND INTEL® XEON® PROCESSOR E7 V2 FAMILIES, MACHINE ERROR CODES FOR MACHINE CHECK

The Intel® Xeon® processor E5 v2 family and the Intel® Xeon® processor E7 v2 family are based on the Ivy Bridge-EP microarchitecture and can be identified with CPUID DisplayFamily_DisplaySignature 06_3EH. Incremental error codes for internal machine check error from the PCU controller is reported in the register bank IA32_MC4; Table 17-17 lists model-specific fields to interpret error codes applicable to IA32_MC4_STATUS. Incremental MC error codes related to the Intel QPI links are reported in the register bank IA32_MC5. Information listed in Table 17-14 for QPI MC error codes apply to IA32_MC5_STATUS. Incremental error codes for the memory controller unit are reported in the register banks IA32_MC9—IA32_MC16. Table 17-18 lists model-specific error codes that apply to IA32_MCi_STATUS, where i = 9-16.

17.5.1 Internal Machine Check Errors

Table 17-17. Machine Check Error Codes for IA32_MC4_STATUS

Type	Bit No.	Bit Function	Bit Description
MCA Error Codes[1]	15:0	MCACOD	
Model Specific Errors	19:16	Reserved, except for the following	0000b: No Error 0001b: Non_IMem_Sel 0010b: I_Parity_Error 0011b: Bad_OpCode 0100b: I_Stack_Underflow 0101b: I_Stack_Overflow 0110b: D_Stack_Underflow 0111b: D_Stack_Overflow 1000b: Non-DMem_Sel 1001b: D_Parity_Error
	23:20	Reserved	Reserved
	31:24	Reserved, except for the following	00H: No Error 0DH: MC_IMC_FORCE_SR_S3_TIMEOUT 0EH: MC_CPD_UNCPD_ST_TIMEOUT 0FH: MC_PKGS_SAFE_WP_TIMEOUT 43H: MC_PECI_MAILBOX_QUIESCE_TIMEOUT 44H: MC_CRITICAL_VR_FAILED 45H: MC_ICC_MAX-NOTSUPPORTED 5CH: MC_MORE_THAN_ONE_LT_AGENT 60H: MC_INVALID_PKGS_REQ_PCH 61H: MC_INVALID_PKGS_REQ_QPI 62H: MC_INVALID_PKGS_RES_QPI 63H: MC_INVALID_PKGC_RES_PCH 64H: MC_INVALID_PKG_STATE_CONFIG 70H: MC_WATCHDG_TIMEOUT_PKGC_SECONDARY 71H: MC_WATCHDG_TIMEOUT_PKGC_MAIN 72H: MC_WATCHDG_TIMEOUT_PKGS_MAIN

Table 17-17. Machine Check Error Codes for IA32_MC4_STATUS (Contd.)

Type	Bit No.	Bit Function	Bit Description
			7AH: MC_HA_FAILSTS_CHANGE_DETECTED 7BH: MC_PCIE_R2PCIE-RW_BLOCK_ACK_TIMEOUT 81H: MC_RECOVERABLE_DIE_THERMAL_TOO_HOT
	56:32	Reserved	Reserved
Status Register Validity Indicators[1]	63:57		

NOTES:

1. These fields are architecturally defined. Refer to Chapter 16, "Machine-Check Architecture," for more information.

17.5.2 Integrated Memory Controller Machine Check Errors

MC error codes associated with integrated memory controllers are reported in the IA32_MC9_STATUS–IA32_MC16_STATUS MSRs. The supported error codes follow the architectural MCACOD definition type **1MMMCCCC**; see Chapter 16, "Machine-Check Architecture."

MSR_ERROR_CONTROL.[bit 1] can enable additional information logging of the IMC. The additional error information logged by the IMC is stored in IA32_MCi_STATUS and IA32_MCi_MISC, where i = 9—16.

IA32_MCi_STATUS (i=9—12) logs errors from the first memory controller. The second memory controller logs errors into IA32_MCi_STATUS (i=13—16).

Table 17-18. Intel IMC MC Error Codes for IA32_MCi_STATUS (i= 9—16)

Type	Bit No.	Bit Function	Bit Description
MCA Error Codes[1]	15:0	MCACOD	Memory Controller error format: 000F 0000 1MMM CCCC
Model Specific Errors	31:16	Reserved, except for the following	001H: Address parity error. 002H: HA Wrt buffer data parity error. 004H: HA Wrt byte enable parity error. 008H: Corrected patrol scrub error.
			010H: Uncorrected patrol scrub error. 020H: Corrected spare error. 040H: Uncorrected spare error. 080H: Corrected memory read error. (Only applicable with iMC's "Additional Error logging" Mode-1 enabled.) 100H - iMC, WDB, parity errors
	36:32	Other Info	When MSR_ERROR_CONTROL.[1] is set, logs an encoded value from the first error device.
	37	Reserved	Reserved
	56:38		See Chapter 16, "Machine-Check Architecture."
Status Register Validity Indicators[1]	63:57		

NOTES:

1. These fields are architecturally defined. Refer to Chapter 16, "Machine-Check Architecture," for more information.

Table 17-19. Intel IMC MC Error Codes for IA32_MCi_MISC (i= 9—16)

Type	Bit No.	Bit Function	Bit Description
MCA Addr Info[1]	8:0		See Chapter 16, "Machine-Check Architecture."
Model Specific Errors	13:9		If the error logged is a MCWrDataPar error or a MCWrBEPar error, this field is the WDB ID that has the parity error; OR if the second error logged is a correctable read error, MC logs the second error device in this field.
	29:14	ErrMask_1stErrDev	When MSR_ERROR_CONTROL.[1] is set, allows the iMC to log first-device error bit mask.
	45:30	ErrMask_2ndErrDev	When MSR_ERROR_CONTROL.[1] is set, allows the iMC to log second-device error bit mask.
	50:46	FailRank_1stErrDev	When MSR_ERROR_CONTROL.[1] is set, allows the iMC to log first-device error failing rank.
	55:51	FailRank_2ndErrDev	When MSR_ERROR_CONTROL.[1] is set, allows the iMC to log second-device error failing rank.
	61:56		Reserved
	62	Valid_1stErrDev	When MSR_ERROR_CONTROL.[1] is set, indicates the iMC has logged valid data from a correctable error from memory read associated with first error device.
	63	Valid_2ndErrDev	When MSR_ERROR_CONTROL.[1] is set, indicates the iMC has logged valid data due to a second correctable error in a memory device. Use this information only after there is valid first error info indicated by bit 62.

NOTES:
1. These fields are architecturally defined. Refer to Chapter 16, "Machine-Check Architecture," for more information.

17.5.3 Home Agent Machine Check Errors

Memory errors from the first memory controller may be logged in the IA32_MC7_{STATUS,ADDR,MISC} registers, while the second memory controller logs errors to the IA32_MC8_{STATUS,ADDR,MISC} registers.

17.6 INCREMENTAL DECODING INFORMATION: INTEL® XEON® PROCESSOR E5 V3 FAMILY, MACHINE ERROR CODES FOR MACHINE CHECK

The Intel® Xeon® processor E5 v3 family is based on the Haswell-E microarchitecture and can be identified with CPUID DisplayFamily_DisplaySignature 06_3FH. Incremental error codes for internal machine check errors from the PCU controller are reported in the register bank IA32_MC4. Table 17-20 lists model-specific fields to interpret error codes applicable to IA32_MC4_STATUS. Incremental MC error codes related to the Intel QPI links are reported in the register banks IA32_MC5, IA32_MC20, and IA32_MC21. Table 17-21 contains information for QPI MC error codes. Incremental error codes for the memory controller unit are reported in the register banks IA32_MC9—IA32_MC16. Table 17-22 lists model-specific error codes that apply to IA32_MCi_STATUS, where i = 9—16.

17.6.1 Internal Machine Check Errors

Table 17-20. Machine Check Error Codes for IA32_MC4_STATUS

Type	Bit No.	Bit Function	Bit Description
MCA Error Codes[1]	15:0	MCACOD	
MCACOD[2]	15:0	Internal Errors	0402H: PCU internal errors. 0403H: PCU internal errors. 0406H: Intel TXT errors 0407H: Other UBOX internal errors. An IERR caused by a core 3-strike the IA32_MC3_STATUS (MLC) is copied to the IA32_MC4_STATUS. After a 3-strike, the core MCA banks will be unavailable.
Model Specific Errors	19:16	Reserved, except for the following	0000b: No error. 00xxb: PCU internal error.
	23:20	Reserved	Reserved
	31:24	Reserved, except for the following	00H: No Error 09H: MC_MESSAGE_CHANNEL_TIMEOUT 13H: MC_DMI_TRAINING_TIMEOUT 15H: MC_DMI_CPU_RESET_ACK_TIMEOUT 1EH: MC_VR_ICC_MAX_LT_FUSED_ICC_MAX 25H: MC_SVID_COMMAND_TIMEOUT 29H: MC_VR_VOUT_MAC_LT_FUSED_SVID 2BH: MC_PKGC_WATCHDOG_HANG_CBZ_DOWN 2CH: MC_PKGC_WATCHDOG_HANG_CBZ_UP 44H: MC_CRITICAL_VR_FAILED 46H: MC_VID_RAMP_DOWN_FAILED 49H: MC_SVID_WRITE_REG_VOUT_MAX_FAILED 4BH: MC_BOOT_VID_TIMEOUT; timeout setting boot VID for DRAM 0. 4FH: MC_SVID_COMMAND_ERROR 52H: MC_FIVR_CATAS_OVERVOL_FAULT 53H: MC_FIVR_CATAS_OVERCUR_FAULT 57H: MC_SVID_PKGC_REQUEST_FAILED 58H: MC_SVID_IMON_REQUEST_FAILED 59H: MC_SVID_ALERT_REQUEST_FAILED 62H: MC_INVALID_PKGS_RSP_QPI 64H: MC_INVALID_PKG_STATE_CONFIG 67H: MC_HA_IMC_RW_BLOCK_ACK_TIMEOUT 6AH: MC_MSGCH_PMREQ_CMP_TIMEOUT 72H: MC_WATCHDG_TIMEOUT_PKGS_MASTER 81H: MC_RECOVERABLE_DIE_THERMAL_TOO_HOT
	56:32	Reserved	Reserved
Status Register Validity Indicators[1]	63:57		

NOTES:

1. These fields are architecturally defined. Refer to Chapter 16, "Machine-Check Architecture," for more information.
2. The internal error codes may be model-specific.

17.6.2 Intel® QPI Machine Check Errors

MC error codes associated with the Intel QPI agents are reported in the IA32_MC5_STATUS, IA32_MC20_STATUS, and IA32_MC21_STATUS MSRs. The supported error codes follow the architectural MCACOD definition type **1PPTRRRRIILL**; see Chapter 16, "Machine-Check Architecture."

Table 17-21 lists model-specific fields to interpret error codes applicable to IA32_MC5_STATUS, IA32_MC20_STATUS, and IA32_MC21_STATUS.

Table 17-21. Intel® QPI MC Error Codes for IA32_MCi_STATUS (i = 5, 20, 21)

Type	Bit No.	Bit Function	Bit Description
MCA Error Codes[1]	15:0	MCACOD	Bus error format: 1PPTRRRRIILL
Model Specific Errors	31:16	MSCOD	02H: Intel QPI physical layer detected drift buffer alarm. 03H: Intel QPI physical layer detected latency buffer rollover. 10H: Intel QPI link layer detected control error from R3QPI. 11H: Rx entered LLR abort state on CRC error. 12H: Unsupported or undefined packet. 13H: Intel QPI link layer control error. 15H: RBT used un-initialized value. 20H: Intel QPI physical layer detected a QPI in-band reset but aborted initialization. 21H: Link failover data self-healing. 22H: Phy detected in-band reset (no width change). 23H: Link failover clock failover. 30H: Rx detected CRC error; successful LLR after Phy re-init. 31H: Rx detected CRC error; successful LLR without Phy re-init. All other values are reserved.
	37:32	Reserved	Reserved
	52:38	Corrected Error Cnt	
	56:53	Reserved	Reserved
Status Register Validity Indicators[1]	63:57		

NOTES:

1. These fields are architecturally defined. Refer to Chapter 16, "Machine-Check Architecture," for more information.

17.6.3 Integrated Memory Controller Machine Check Errors

MC error codes associated with integrated memory controllers are reported in the IA32_MC9_STATUS—IA32_MC16_STATUS MSRs. The supported error codes follow the architectural MCACOD definition type **1MMMCCCC**; see Chapter 16, "Machine-Check Architecture."

MSR_ERROR_CONTROL.[bit 1] can enable additional information logging of the IMC. The additional error information logged by the IMC is stored in IA32_MCi_STATUS and IA32_MCi_MISC, where i = 9—16.

IA32_MCi_STATUS (i=9—12) logs errors from the first memory controller. The second memory controller logs errors into IA32_MCi_STATUS (i=13—16).

Table 17-22. Intel IMC MC Error Codes for IA32_MCi_STATUS (i= 9—16)

Type	Bit No.	Bit Function	Bit Description
MCA Error Codes[1]	15:0	MCACOD	Memory Controller error format: 0000 0000 1MMM CCCC
Model Specific Errors	31:16	Reserved, except for the following	0001H: DDR3 address parity error. 0002H: Uncorrected HA write data error.
			0004H: Uncorrected HA data byte enable error. 0008H: Corrected patrol scrub error. 0010H: Uncorrected patrol scrub error. 0020H: Corrected spare error. 0040H: Uncorrected spare error. 0080H: Corrected memory read error. (Only applicable with iMC's "Additional Error logging" Mode-1 enabled.) 0100H: iMC, write data buffer parity errors. 0200H: DDR4 command address parity error.
	36:32	Other Info	When MSR_ERROR_CONTROL.[1] is set, logs an encoded value from the first error device.
	37	Reserved	Reserved
	56:38		See Chapter 16, "Machine-Check Architecture."
Status Register Validity Indicators[1]	63:57		

NOTES:

1. These fields are architecturally defined. Refer to Chapter 16, "Machine-Check Architecture," for more information.

Table 17-23. Intel IMC MC Error Codes for IA32_MCi_MISC (i= 9—16)

Type	Bit No.	Bit Function	Bit Description
MCA Addr Info[1]	8:0		See Chapter 16, "Machine-Check Architecture."
Model Specific Errors	13:9		If the error logged is an MCWrDataPar error or an MCWrBEPar error, this field is the WDB ID that has the parity error; OR if the second error logged is a correctable read error, MC logs the second error device in this field.
	29:14	ErrMask_1stErrDev	When MSR_ERROR_CONTROL.[1] is set, allows the iMC to log first-device error bit mask.
	45:30	ErrMask_2ndErrDev	When MSR_ERROR_CONTROL.[1] is set, allows the iMC to log second-device error bit mask.
	50:46	FailRank_1stErrDev	When MSR_ERROR_CONTROL.[1] is set, allows the iMC to log first-device error failing rank.
	55:51	FailRank_2ndErrDev	When MSR_ERROR_CONTROL.[1] is set, allows the iMC to log second-device error failing rank.
	61:56	Reserved	Reserved
	62	Valid_1stErrDev	When MSR_ERROR_CONTROL.[1] is set, indicates the iMC has logged valid data from a correctable error from a memory read associated with first error device.
	63	Valid_2ndErrDev	When MSR_ERROR_CONTROL.[1] is set, indicates the iMC has logged valid data due to a second correctable error in a memory device. Use this information only after there is valid first error information indicated by bit 62.

NOTES:

1. These fields are architecturally defined. Refer to Chapter 16, "Machine-Check Architecture," for more information.

17.6.4 Home Agent Machine Check Errors

Memory errors from the first memory controller may be logged in the IA32_MC7_{STATUS,ADDR,MISC} registers, while the second memory controller logs errors in the IA32_MC8_{STATUS,ADDR,MISC} registers.

17.7 INCREMENTAL DECODING INFORMATION: INTEL® XEON® PROCESSOR D FAMILY, MACHINE ERROR CODES FOR MACHINE CHECK

The Intel® Xeon® processor D family is based on the Broadwell microarchitecture and can be identified with CPUID DisplayFamily_DisplaySignature 06_56H. Incremental error codes for internal machine check error from the PCU controller are reported in the register bank IA32_MC4. Table 17-24 lists model-specific fields to interpret error codes applicable to IA32_MC4_STATUS. Incremental error codes for the memory controller unit are reported in the register banks IA32_MC9—IA32_MC10. Table 17-18 lists model-specific error codes that apply to IA32_MCi_STATUS, where i = 9—10.

17.7.1 Internal Machine Check Errors

Table 17-24. Machine Check Error Codes for IA32_MC4_STATUS

Type	Bit No.	Bit Function	Bit Description
MCA Error Codes[1]	15:0	MCACOD	
MCACOD[2]	15:0	Internal Errors	0402H: PCU internal errors. 0403H: Internal errors. 0406H: Intel TXT errors. 0407H: Other UBOX internal errors. On an IERR caused by a core 3-strike, the IA32_MC3_STATUS (MLC) is copied to the IA32_MC4_STATUS. After a 3-strike, the core MCA banks will be unavailable.
Model Specific Errors	19:16	Reserved, except for the following	0000b: No error. 00x1b: PCU internal error. 001xb: PCU internal error.
	23:20	Reserved, except for the following	x1xxb: UBOX error.
	31:24	Reserved, except for the following	00H: No Error 09H: MC_MESSAGE_CHANNEL_TIMEOUT 13H: MC_DMI_TRAINING_TIMEOUT 15H: MC_DMI_CPU_RESET_ACK_TIMEOUT 1EH: MC_VR_ICC_MAX_LT_FUSED_ICC_MAX 25H: MC_SVID_COMMAND_TIMEOUT 26H: MCA_PKGC_DIRECT_WAKE_RING_TIMEOUT 29H: MC_VR_VOUT_MAC_LT_FUSED_SVID 2BH: MC_PKGC_WATCHDOG_HANG_CBZ_DOWN 2CH: MC_PKGC_WATCHDOG_HANG_CBZ_UP 44H: MC_CRITICAL_VR_FAILED 46H: MC_VID_RAMP_DOWN_FAILED 49H: MC_SVID_WRITE_REG_VOUT_MAX_FAILED

Table 17-24. Machine Check Error Codes for IA32_MC4_STATUS (Contd.)

Type	Bit No.	Bit Function	Bit Description
			4BH: MC_PP1_BOOT_VID_TIMEOUT. Timeout setting boot VID for DRAM 0. 4FH: MC_SVID_COMMAND_ERROR. 52H: MC_FIVR_CATAS_OVERVOL_FAULT. 53H: MC_FIVR_CATAS_OVERCUR_FAULT. 57H: MC_SVID_PKGC_REQUEST_FAILED 58H: MC_SVID_IMON_REQUEST_FAILED 59H: MC_SVID_ALERT_REQUEST_FAILED 62H: MC_INVALID_PKGS_RSP_QPI 64H: MC_INVALID_PKG_STATE_CONFIG 67H: MC_HA_IMC_RW_BLOCK_ACK_TIMEOUT 6AH: MC_MSGCH_PMREQ_CMP_TIMEOUT 72H: MC_WATCHDG_TIMEOUT_PKGS_MASTER 81H: MC_RECOVERABLE_DIE_THERMAL_TOO_HOT
	56:32	Reserved	Reserved
Status Register Validity Indicators[1]	63:57		

NOTES:

1. These fields are architecturally defined. Refer to Chapter 16, "Machine-Check Architecture," for more information.
2. The internal error codes may be model-specific.

17.7.2 Integrated Memory Controller Machine Check Errors

MC error codes associated with integrated memory controllers are reported in the IA32_MC9_STATUS—IA32_MC10_STATUS MSRs. The supported error codes follow the architectural MCACOD definition type **1MMMCCCC**; see Chapter 16, "Machine-Check Architecture."

MSR_ERROR_CONTROL.[bit 1] can enable additional information logging of the IMC. The additional error information logged by the IMC is stored in IA32_MCi_STATUS and IA32_MCi_MISC, where i = 9—10.

Table 17-25. Intel IMC MC Error Codes for IA32_MCi_STATUS (i= 9—10)

Type	Bit No.	Bit Function	Bit Description
MCA Error Codes[1]	15:0	MCACOD	Memory Controller error format: 0000 0000 1MMM CCCC
Model Specific Errors	31:16	Reserved, except for the following	0001H: DDR3 address parity error. 0002H: Uncorrected HA write data error. 0004H: Uncorrected HA data byte enable error. 0008H: Corrected patrol scrub error. 0010H: Uncorrected patrol scrub error. 0100H: iMC, write data buffer parity errors. 0200H: DDR4 command address parity error.
	36:32	Other Info	Reserved
	37	Reserved	Reserved
	56:38		See Chapter 16, "Machine-Check Architecture."
Status Register Validity Indicators[1]	63:57		

NOTES:
1. These fields are architecturally defined. Refer to Chapter 16, "Machine-Check Architecture," for more information.

17.8 INCREMENTAL DECODING INFORMATION: INTEL® XEON® PROCESSOR E5 V4 FAMILY, MACHINE ERROR CODES FOR MACHINE CHECK

The Intel® Xeon® processor E5 v4 family is based on the Broadwell microarchitecture and can be identified with CPUID DisplayFamily_DisplaySignature 06_4FH. Incremental error codes for internal machine check errors from the PCU controller are reported in the register bank IA32_MC4. Table 17-20 in Section 17.6.1 lists model-specific fields to interpret error codes applicable to IA32_MC4_STATUS.

Incremental MC error codes related to the Intel QPI links are reported in the register banks IA32_MC5, IA32_MC20, and IA32_MC21. Information listed in Table 17-21 of Section 17.6.1 covers QPI MC error codes.

17.8.1 Integrated Memory Controller Machine Check Errors

MC error codes associated with integrated memory controllers are reported in the IA32_MC9_STATUS—IA32_MC16_STATUS MSRs. The supported error codes follow the architectural MCACOD definition type **1MMMCCCC**; see Chapter 16, "Machine-Check Architecture."

Table 17-26 lists model-specific error codes that apply to IA32_MCi_STATUS, where i = 9—16.

IA32_MCi_STATUS (i=9—12) logs errors from the first memory controller. The second memory controller logs errors into IA32_MCi_STATUS (i=13—16).

Table 17-26. Intel IMC MC Error Codes for IA32_MCi_STATUS (i= 9—16)

Type	Bit No.	Bit Function	Bit Description
MCA Error Codes[1]	15:0	MCACOD	Memory Controller error format: 0000 0000 1MMM CCCC
Model Specific Errors	31:16	Reserved, except for the following	0001H: DDR3 address parity error. 0002H: Uncorrected HA write data error. 0004H: Uncorrected HA data byte enable error. 0008H: Corrected patrol scrub error. 0010H: Uncorrected patrol scrub error. 0020H: Corrected spare error. 0040H: Uncorrected spare error. 0100H: iMC, write data buffer parity errors. 0200H: DDR4 command address parity error.
	36:32	Other Info	Reserved
	37	Reserved	Reserved
	56:38		See Chapter 16, "Machine-Check Architecture."
Status Register Validity Indicators[1]	63:57		

NOTES:
1. These fields are architecturally defined. Refer to Chapter 16, "Machine-Check Architecture," for more information.

17.8.2 Home Agent Machine Check Errors

MC error codes associated with mirrored memory corrections are reported in the IA32_MC7_MISC and IA32_MC8_MISC MSRs. Table 17-27 lists model-specific error codes that apply to IA32_MCi_MISC, where i = 7, 8.

Memory errors from the first memory controller may be logged in the IA32_MC7_{STATUS,ADDR,MISC} registers, while the second memory controller logs errors in the IA32_MC8_{STATUS,ADDR,MISC} registers.

Table 17-27. Intel HA MC Error Codes for IA32_MCi_MISC (i= 7, 8)

Bit No.	Bit Function	Bit Description
5:0	LSB	See Figure 16-8.
8:6	Address Mode	See Table 16-3.
40:9	Reserved	Reserved
41	Failover	Error occurred at a pair of mirrored memory channels. Error was corrected by mirroring with channel failover.
42	Mirrorcorr	Error was corrected by mirroring and primary channel scrubbed successfully.
63:43	Reserved	Reserved

17.9 INCREMENTAL DECODING INFORMATION: INTEL® XEON® SCALABLE PROCESSOR FAMILY, MACHINE ERROR CODES FOR MACHINE CHECK

In the Intel® Xeon® Scalable Processor Family with CPUID DisplayFamily_DisplaySignature 06_55H, incremental error codes for internal machine check errors from the PCU controller are reported in the register bank IA32_MC4. Table 17-28 in Section 17.9.1 lists model-specific fields to interpret error codes applicable to IA32_MC4_STATUS.

17.9.1 Internal Machine Check Errors

Table 17-28. Machine Check Error Codes for IA32_MC4_STATUS

Type	Bit No.	Bit Function	Bit Description
MCA Error Codes[1]	15:0	MCACOD	
MCACOD[2]	15:0	Internal Errors	0402H: PCU internal errors. 0403H: PCU internal errors. 0406H: Intel TXT errors. 0407H: Other UBOX internal errors. On an IERR caused by a core 3-strike, the IA32_MC3_STATUS (MLC) is copied to the IA32_MC4_STATUS. After a 3-strike, the core MCA banks will be unavailable.
Model Specific Errors	19:16	Reserved, except for the following	0000b: No error. 00xxb: PCU internal error.

Table 17-28. Machine Check Error Codes for IA32_MC4_STATUS

Type	Bit No.	Bit Function	Bit Description
	23:20	Reserved	Reserved
	31:24	Reserved, except for the following	00H: No Error 0DH: MCA_DMI_TRAINING_TIMEOUT 0FH: MCA_DMI_CPU_RESET_ACK_TIMEOUT 10H: MCA_MORE_THAN_ONE_LT_AGENT 1EH: MCA_BIOS_RST_CPL_INVALID_SEQ 1FH: MCA_BIOS_INVALID_PKG_STATE_CONFIG 25H: MCA_MESSAGE_CHANNEL_TIMEOUT 27H: MCA_MSGCH_PMREQ_CMP_TIMEOUT 30H: MCA_PKGC_DIRECT_WAKE_RING_TIMEOUT 31H: MCA_PKGC_INVALID_RSP_PCH 33H: MCA_PKGC_WATCHDOG_HANG_CBZ_DOWN 34H: MCA_PKGC_WATCHDOG_HANG_CBZ_UP 38H: MCA_PKGC_WATCHDOG_HANG_C3_UP_SF 40H: MCA_SVID_VCCIN_VR_ICC_MAX_FAILURE 41H: MCA_SVID_COMMAND_TIMEOUT 42H: MCA_SVID_VCCIN_VR_VOUT_MAX_FAILURE 43H: MCA_SVID_CPU_VR_CAPABILITY_ERROR 44H: MCA_SVID_CRITICAL_VR_FAILED 45H: MCA_SVID_SA_ITD_ERROR 46H: MCA_SVID_READ_REG_FAILED 47H: MCA_SVID_WRITE_REG_FAILED 48H: MCA_SVID_PKGC_INIT_FAILED 49H: MCA_SVID_PKGC_CONFIG_FAILED 4AH: MCA_SVID_PKGC_REQUEST_FAILED 4BH: MCA_SVID_IMON_REQUEST_FAILED 4CH: MCA_SVID_ALERT_REQUEST_FAILED 4DH: MCA_SVID_MCP_VP_ABSENT_OR_RAMP_ERROR 4EH: MCA_SVID_UNEXPECTED_MCP_VP_DETECTED 51H: MCA_FIVR_CATAS_OVERVOL_FAULT 52H: MCA_FIVR_CATAS_OVERCUR_FAULT 58H: MCA_WATCHDG_TIMEOUT_PKGC_SECONDARY 59H: MCA_WATCHDG_TIMEOUT_PKGC_MAIN 5AH: MCA_WATCHDG_TIMEOUT_PKGS_MAIN 61H: MCA_PKGS_CPD_UNPCD_TIMEOUT 63H: MCA_PKGS_INVALID_REQ_PCH 64H: MCA_PKGS_INVALID_REQ_INTERNAL 65H: MCA_PKGS_INVALID_RSP_INTERNAL 6BH: MCA_PKGS_SMBUS_VPP_PAUSE_TIMEOUT 81H: MC_RECOVERABLE_DIE_THERMAL_TOO_HOT
	52:32	Reserved	Reserved
	54:53	CORR_ERR_STATUS	Reserved

Table 17-28. Machine Check Error Codes for IA32_MC4_STATUS

Type	Bit No.	Bit Function	Bit Description
	56:55	Reserved	Reserved
Status Register Validity Indicators[1]	63:57		

NOTES:

1. These fields are architecturally defined. Refer to Chapter 16, "Machine-Check Architecture," for more information.
2. The internal error codes may be model-specific.

17.9.2 Interconnect Machine Check Errors

MC error codes associated with the link interconnect agents are reported in the IA32_MC5_STATUS, IA32_MC12_STATUS, and IA32_MC19_STATUS MSRs. The supported error codes follow the architectural MCACOD definition type **1PPTRRRRIILL**; see Chapter 16, "Machine-Check Architecture."

Table 17-29 lists model-specific fields to interpret error codes applicable to IA32_MCi_STATUS, i= 5, 12, 19.

Table 17-29. Interconnect MC Error Codes for IA32_MCi_STATUS (i = 5, 12, 19)

Type	Bit No.	Bit Function	Bit Description
MCA Error Codes[1]	15:0	MCACOD	Bus error format: 1PPTRRRRIILL The two supported compound error codes: ▪ 0x0C0F: Unsupported/Undefined Packet. ▪ 0x0E0F: For all other corrected and uncorrected errors.
Model Specific Errors	21:16	MSCOD	The encoding of Uncorrectable (UC) errors are: 00H: UC Phy Initialization Failure. 01H: UC Phy detected drift buffer alarm. 02H: UC Phy detected latency buffer rollover. 10H: UC link layer Rx detected CRC error: unsuccessful LLR entered abort state. 11H: UC LL Rx unsupported or undefined packet. 12H: UC LL or Phy control error. 13H: UC LL Rx parameter exchange exception. 1FH: UC LL detected control error from the link-mesh interface. The encoding of correctable (COR) errors are: 20H: COR Phy initialization abort. 21H: COR Phy reset. 22H: COR Phy lane failure, recovery in x8 width. 23H: COR Phy L0c error corrected without Phy reset. 24H: COR Phy L0c error triggering Phy reset. 25H: COR Phy L0p exit error corrected with Phy reset. 30H: COR LL Rx detected CRC error; successful LLR without Phy re-init. 31H: COR LL Rx detected CRC error; successful LLR with Phy re-init. All other values are reserved.

Table 17-29. Interconnect MC Error Codes for IA32_MCi_STATUS (i = 5, 12, 19)

Type	Bit No.	Bit Function	Bit Description
	31:22	MSCOD_SPARE	The definition below applies to MSCOD 12h (UC LL or Phy Control Errors) [Bit 22] : Phy Control Error. [Bit 23] : Unexpected Retry.Ack flit. [Bit 24] : Unexpected Retry.Req flit. [Bit 25] : RF parity error. [Bit 26] : Routeback Table error. [Bit 27] : Unexpected Tx Protocol flit (EOP, Header or Data). [Bit 28] : Rx Header-or-Credit BGF credit overflow/underflow. [Bit 29] : Link Layer Reset still in progress when Phy enters L0 (Phy training should not be enabled until after LL reset is complete as indicated by KTILCL.LinkLayerReset going back to 0). [Bit 30] : Link Layer reset initiated while protocol traffic not idle. [Bit 31] : Link Layer Tx Parity Error.
	37:32	Reserved	Reserved
	52:38	Corrected Error Cnt	
	56:53	Reserved	Reserved
Status Register Validity Indicators[1]	63:57		

NOTES:

1. These fields are architecturally defined. Refer to Chapter 16, "Machine-Check Architecture," for more information.

17.9.3 Integrated Memory Controller Machine Check Errors

MC error codes associated with integrated memory controllers are reported in the IA32_MC13_STATUS—IA32_MC18_STATUS MSRs. The supported error codes follow the architectural MCACOD definition type **1MMMCCCC**; see Chapter 16, "Machine-Check Architecture."

IA32_MCi_STATUS (i=13,14,17) logs errors from the first memory controller. The second memory controller logs errors into IA32_MCi_STATUS (i=15,16,18).

Table 17-30. Intel IMC MC Error Codes for IA32_MCi_STATUS (i= 13—18)

Type	Bit No.	Bit Function	Bit Description
MCA Error Codes[1]	15:0	MCACOD	Memory Controller error format: 0000 0000 1MMM CCCC
Model Specific Errors	31:16	Reserved, except for the following	0001H: Address parity error. 0002H: HA write data parity error. 0004H: HA write byte enable parity error. 0008H: Corrected patrol scrub error. 0010H: Uncorrected patrol scrub error. 0020H: Corrected spare error. 0040H: Uncorrected spare error. 0080H: Any HA read error. 0100H: WDB read parity error. 0200H: DDR4 command address parity error. 0400H: Uncorrected address parity error. 0800H: Unrecognized request type. 0801H: Read response to an invalid scoreboard entry. 0802H: Unexpected read response. 0803H: DDR4 completion to an invalid scoreboard entry. 0804H: Completion to an invalid scoreboard entry. 0805H: Completion FIFO overflow. 0806H: Correctable parity error. 0807H: Uncorrectable error. 0808H: Interrupt received while outstanding interrupt was not ACKed. 0809H: ERID FIFO overflow. 080AH: Error on Write credits. 080BH: Error on Read credits. 080CH: Scheduler error. 080DH: Error event.
	36:32	Other Info	MC logs the first error device. This is an encoded 5-bit value of the device.
	37	Reserved	Reserved
	56:38		See Chapter 16, "Machine-Check Architecture."
Status Register Validity Indicators[1]	63:57		

NOTES:

1. These fields are architecturally defined. Refer to Chapter 16, "Machine-Check Architecture," for more information.

17.9.4 M2M Machine Check Errors

MC error codes associated with M2M are reported in the IA32_MC7_STATUS and IA32_MC8_STATUS MSRs. The supported error codes follow the architectural MCACOD definition type **1MMMCCCC**; see Chapter 16, "Machine-Check Architecture."

Table 17-31. M2M MC Error Codes for IA32_MCi_STATUS (i= 7, 8)

Type	Bit No.	Bit Function	Bit Description
MCA Error Codes[1]	15:0	MCACOD	Compound error format: 0000 0000 1MMM CCCC
Model Specific Errors	16	MscodDataRdErr	Logged an MC read data error.
	17	Reserved	Reserved
	18	MscodPtlWrErr	Logged an MC partial write data error.
	19	MscodFullWrErr	Logged a full write data error.
	20	MscodBgfErr	Logged an M2M clock-domain-crossing buffer (BGF) error.
	21	MscodTimeOut	Logged an M2M time out.
	22	MscodParErr	Logged an M2M tracker parity error.
	23	MscodBucket1Err	Logged a fatal Bucket1 error.
	31:24	Reserved	Reserved
	36:32	Other Info	MC logs the first error device. This is an encoded 5-bit value of the device.
	37	Reserved	Reserved
	56:38		See Chapter 16, "Machine-Check Architecture."
Status Register Validity Indicators[1]	63:57		

NOTES:

1. These fields are architecturally defined. Refer to Chapter 16, "Machine-Check Architecture," for more information.

17.9.5 Home Agent Machine Check Errors

MC error codes associated with mirrored memory corrections are reported in the IA32_MC7_MISC and IA32_MC8_MISC MSRs. Table 17-32 lists model-specific error codes that apply to IA32_MCi_MISC, where i = 7, 8.

Memory errors from the first memory controller may be logged in the IA32_MC7_{STATUS,ADDR,MISC} registers, while the second memory controller logs errors in the IA32_MC8_{STATUS,ADDR,MISC} registers.

Table 17-32. Intel HA MC Error Codes for IA32_MCi_MISC (i= 7, 8)

Bit No.	Bit Function	Bit Description
5:0	LSB	See Figure 16-8.
8:6	Address Mode	See Table 16-3.
40:9	Reserved	Reserved
61:41	Reserved	Reserved
62	Mirrorcorr	Error was corrected by mirroring and primary channel scrubbed successfully.
63	Failover	Error occurred at a pair of mirrored memory channels. Error was corrected by mirroring with channel failover.

17.10 INCREMENTAL DECODING INFORMATION: PROCESSOR FAMILY WITH CPUID DISPLAYFAMILY_DISPLAYMODEL SIGNATURE 06_5FH, MACHINE ERROR CODES FOR MACHINE CHECK

In Intel Atom® processors based on Goldmont Microarchitecture with CPUID DisplayFamily_DisplaySignature 06_5FH (Denverton), incremental error codes for the memory controller unit are reported in the register banks IA32_MC6 and IA32_MC7. Table 17-33 in Section 17.10.1 lists model-specific fields to interpret error codes applicable to IA32_MCi_STATUS, where i = 6, 7.

17.10.1 Integrated Memory Controller Machine Check Errors

MC error codes associated with integrated memory controllers are reported in the IA32_MC6_STATUS and IA32_MC7_STATUS MSRs. The supported error codes follow the architectural MCACOD definition type **1MMMCCCC**; see Chapter 16, "Machine-Check Architecture."

Table 17-33. Intel IMC MC Error Codes for IA32_MCi_STATUS (i= 6, 7)

Type	Bit No.	Bit Function	Bit Description
MCA Error Codes[1]	15:0	MCACOD	
Model Specific Errors	31:16	Reserved, except for the following	01H: Cmd/Addr parity. 02H: Corrected Demand/Patrol Scrub error. 04H: Uncorrected patrol scrub error. 08H: Uncorrected demand read error. 10H: WDB read ECC.
	36:32	Other Info	
	37	Reserved	Reserved
	56:38		See Chapter 16, "Machine-Check Architecture."
Status Register Validity Indicators[1]	63:57		

NOTES:

1. These fields are architecturally defined. Refer to Chapter 16, "Machine-Check Architecture," for more information.

17.11 INCREMENTAL DECODING INFORMATION: 3RD GENERATION INTEL® XEON® SCALABLE PROCESSOR FAMILY, MACHINE ERROR CODES FOR MACHINE CHECK

In the 3rd generation Intel® Xeon® Scalable Processor Family with CPUID DisplayFamily_DisplaySignatures of 06_6AH and 06_6CH, incremental error codes for internal machine check errors from the PCU controller are reported in the register bank IA32_MC4. Table 17-34 in Section 17.11.1 lists model-specific fields to interpret error codes applicable to IA32_MC4_STATUS.

17.11.1 Internal Machine Check Errors

Table 17-34. Machine Check Error Codes for IA32_MC4_STATUS

Type	Bit No.	Bit Function	Bit Description
Machine Check Error Codes[1]	15:0	MCCOD	
MCCOD	15:0	Internal Errors	The value of this field will be 0402H for the PCU and 0406H for internal firmware errors. This applies for any logged error.
Model Specific Errors	19:16	Reserved, except for the following	Model specific error code bits 19:16. This logs the type of HW UC (PCU/VCU) error that has occurred. There are 7 errors defined. 01H: Instruction address out of valid space. 02H: Double bit RAM error on Instruction Fetch. 03H: Invalid OpCode seen. 04H: Stack Underflow. 05H: Stack Overflow. 06H: Data address out of valid space. 07H: Double bit RAM error on Data Fetch.
	23:20	Reserved, except for the following	Model specific error code bits 23:20. This logs the type of HW FSM error that has occurred. There are 3 errors defined. 04H: Clock/power IP response timeout. 05H: SMBus controller raised SMI. 09H: PM controller received invalid transaction.
	31:24	Reserved, except for the following	0DH: MCA_LLC_BIST_ACTIVE_TIMEOUT 0EH: MCA_DMI_TRAINING_TIMEOUT 0FH: MCA_DMI_STRAP_SET_ARRIVAL_TIMEOUT 10H: MCA_DMI_CPU_RESET_ACK_TIMEOUT 11H: MCA_MORE_THAN_ONE_LT_AGENT 14H: MCA_INCOMPATIBLE_PCH_TYPE 1EH: MCA_BIOS_RST_CPL_INVALID_SEQ 1FH: MCA_BIOS_INVALID_PKG_STATE_CONFIG 2DH: MCA_PCU_PMAX_CALIB_ERROR 2EH: MCA_TSC100_SYNC_TIMEOUT 3AH: MCA_GPSB_TIMEOUT 3BH: MCA_PMSB_TIMEOUT 3EH: MCA_IOSFSB_PMREQ_CMP_TIMEOUT 40H: MCA_SVID_VCCIN_VR_ICC_MAX_FAILURE 42H: MCA_SVID_VCCIN_VR_VOUT_FAILURE 43H: MCA_SVID_CPU_VR_CAPABILITY_ERROR 44H: MCA_SVID_CRITICAL_VR_FAILED 45H: MCA_SVID_SA_ITD_ERROR 46H: MCA_SVID_READ_REG_FAILED 47H: MCA_SVID_WRITE_REG_FAILED 4AH: MCA_SVID_PKGC_REQUEST_FAILED

Table 17-34. Machine Check Error Codes for IA32_MC4_STATUS (Contd.)

Type	Bit No.	Bit Function	Bit Description
			4BH: MCA_SVID_IMON_REQUEST_FAILED 4CH: MCA_SVID_ALERT_REQUEST_FAILED 4DH: MCA_SVID_MCP_VR_RAMP_ERROR 56H: MCA_FIVR_PD_HARDERR 58H: MCA_WATCHDOG_TIMEOUT_PKGC_SECONDARY 59H: MCA_WATCHDOG_TIMEOUT_PKGC_MAIN 5AH: MCA_WATCHDOG_TIMEOUT_PKGS_MAIN 5BH: MCA_WATCHDOG_TIMEOUT_MSG_CH_FSM 5CH: MCA_WATCHDOG_TIMEOUT_BULK_CR_FSM 5DH: MCA_WATCHDOG_TIMEOUT_IOSFSB_FSM 60H: MCA_PKGS_SAFE_WP_TIMEOUT 61H: MCA_PKGS_CPD_UNCPD_TIMEOUT 62H: MCA_PKGS_INVALID_REQ_PCH 63H: MCA_PKGS_INVALID_REQ_INTERNAL 64H: MCA_PKGS_INVALID_RSP_INTERNAL 65H-7AH: MCA_PKGS_RESET_PREP_TIMEOUT 7BH: MCA_PKGS_SMBUS_VPP_PAUSE_TIMEOUT 7CH: MCA_PKGS_SMBUS_MCP_PAUSE_TIMEOUT 7DH: MCA_PKGS_SMBUS_SPD_PAUSE_TIMEOUT 80H: MCA_PKGC_DISP_BUSY_TIMEOUT 81H: MCA_PKGC_INVALID_RSP_PCH 83H: MCA_PKGC_WATCHDOG_HANG_CBZ_DOWN 84H: MCA_PKGC_WATCHDOG_HANG_CBZ_UP 87H: MCA_PKGC_WATCHDOG_HANG_C2_BLKMASTER 88H: MCA_PKGC_WATCHDOG_HANG_C2_PSLIMIT 89H: MCA_PKGC_WATCHDOG_HANG_SETDISP 8BH: MCA_PKGC_ALLOW_L1_ERROR 90H: MCA_RECOVERABLE_DIE_THERMAL_TOO_HOT A0H: MCA_ADR_SIGNAL_TIMEOUT A1H: MCA_BCLK_FREQ_OC_ABOVE_THRESHOLD B0H: MCA_DISPATCHER_RUN_BUSY_TIMEOUT
	37:32	ENH_MCA_AVAIL0	Available when Enhanced MCA is in use.
	52:38	CORR_ERR_COUNT	Correctable error count.
	54:53	CORRERRORSTATUSIND	These bits are used to indicate when the number of corrected errors has exceeded the safe threshold to the point where an uncorrected error has become more likely to happen. Table 3 shows the encoding of these bits.
	56:55	ENH_MCA_AVAIL1	Available when Enhanced MCA is in use.
Status Register Validity Indicators[1]	63:57		

NOTES:

1. These fields are architecturally defined. Refer to Chapter 16, “Machine-Check Architecture,” for more information.

17.11.2 Interconnect Machine Check Errors

MC error codes associated with the link interconnect agents are reported in the IA32_MC5_STATUS, IA32_MC7_STATUS, and IA32_MC8_STATUS MSRs. The supported error codes follow the architectural MCACOD definition type **1PPTRRRRIILL**; see Chapter 16, "Machine-Check Architecture."

NOTE

The interconnect machine check errors in this section apply only to the 3rd generation Intel Xeon Scalable Processor Family with a CPUID DisplayFamily_DisplaySignature of 06_6AH. These do not apply to the 3rd generation Intel Xeon Scalable Processor Family with a CPUID DisplayFamily_DisplaySignature of 06_6CH.

Table 17-35 lists model-specific fields to interpret error codes applicable to IA32_MCi_STATUS, where i= 5, 7, 8.

Table 17-35. Interconnect MC Error Codes for IA32_MCi_STATUS (i = 5, 7, 8)

Type	Bit No.	Bit Function	Bit Description
MCA Error Codes[1]	15:0	MCACOD	Bus error format: 1PPTRRRRIILL The two supported compound error codes: ▪ 0x0C0F: Unsupported/Undefined Packet. ▪ 0x0E0F: For all other corrected and uncorrected errors.
Model Specific Errors	21:16	MSCOD	The encoding of Uncorrectable (UC) errors are: 00H: Phy Initialization Failure (NumInit). 01H: Phy Detected Drift Buffer Alarm. 02H: Phy Detected Latency Buffer Rollover. 10H: LL Rx detected CRC error: unsuccessful LLR (entered Abort state). 11H: LL Rx Unsupported/Undefined packet. 12H: LL or Phy Control Error. 13H: LL Rx Parameter Exception. 1FH: LL Detected Control Error. The encoding of correctable (COR) errors are: 20H: Phy Initialization Abort. 21H: Phy Inband Reset. 22H: Phy Lane failure, recovery in x8 width. 23H: Phy L0c error corrected without Phy reset. 24H: Phy L0c error triggering Phy reset. 25H: Phy L0p exit error corrected with reset. 30H: LL Rx detected CRC error: successful LLR without Phy Re-init. 31H: LL Rx detected CRC error: successful LLR with Phy Re-init. 32H: Tx received LLR. All other values are reserved.

Table 17-35. Interconnect MC Error Codes for IA32_MCi_STATUS (i = 5, 7, 8) (Contd.)

Type	Bit No.	Bit Function	Bit Description
	31:22	MSCOD_SPARE	The definition below applies to MSCOD 12h (UC LL or Phy Control Errors). [Bit 22] : Phy Control Error. [Bit 23] : Unexpected Retry.Ack flit. [Bit 24] : Unexpected Retry.Req flit. [Bit 25] : RF parity error. [Bit 26] : Routeback Table error. [Bit 27] : Unexpected Tx Protocol flit (EOP, Header or Data). [Bit 28] : Rx Header-or-Credit BGF credit overflow/underflow. [Bit 29] : Link Layer Reset still in progress when Phy enters L0 (Phy training should not be enabled until after LL reset is complete as indicated by KTILCL.LinkLayerReset going back to 0). [Bit 30] : Link Layer reset initiated while protocol traffic not idle. [Bit 31] : Link Layer Tx Parity Error.
	37:32	OTHER_INFO	Other Info.
	56:38	Corrected Error Cnt	See Chapter 16, "Machine-Check Architecture."
Status Register Validity Indicators[1]	63:57		

NOTES:

1. These fields are architecturally defined. Refer to Chapter 16, "Machine-Check Architecture," for more information.

17.11.3 Integrated Memory Controller Machine Check Errors

MC error codes associated with integrated memory controllers for the 3rd generation Intel® Xeon® Scalable Processor Family based on Ice Lake microarchitecture are defined in Table 17-37.

The MSRs reporting MC error codes differ depending on the CPUID DisplayFamily_DisplaySignature of the processor. See Table 17-36 for details.

Table 17-36. MSRs Reporting MC Error Codes by CPUID DisplayFamily_DisplaySignature

Processor	CPUID DisplayFamily_DisplaySignature	MSRs Reporting MC Error Codes
3rd generation Intel® Xeon® Scalable Processor Family based on Ice Lake microarchitecture	06_6AH	IA32_MC13_STATUS—IA32_MC14_STATUS IA32_MC17_STATUS—IA32_MC18_STATUS IA32_MC21_STATUS—IA32_MC22_STATUS IA32_MC25_STATUS—IA32_MC26_STATUS
3rd generation Intel® Xeon® Scalable Processor Family based on Ice Lake microarchitecture	06_6CH	IA32_MC13_STATUS—IA32_MC14_STATUS IA32_MC17_STATUS—IA32_MC18_STATUS

The supported error codes follow the architectural MCACOD definition type **1MMMCCCC**; see Chapter 16, "Machine-Check Architecture."

Table 17-37. Intel IMC MC Error Codes for IA32_MCi_STATUS (i= 13—14, 17—18, 21—22, 25—26)

Type	Bit No.	Bit Function	Bit Description
MCA Error Codes[1]	15:0	MCACOD	Memory Controller error format: 0000 0000 1MMM CCCC
Model Specific Errors	27:16	Error Codes	0000H: Uncorrectable spare error. 0001H: End to End address parity error. 0002H: Write data parity error. 0003H: End to End uncorrectable/correctable write data ECC error. 0004H: Write byte enable parity error. 0007H: Transaction ID parity error. 0008H: Correctable patrol scrub error. 0010H: Uncorrectable patrol scrub error. 0020H: Correctable spare error. 0080H: Transient or correctable error for demand or underfill reads or read 2LM metadata error. 00A0H: Uncorrectable error for demand or underfill reads. 0100H: WDB read parity error. 0108H: DDR/DDRT link failure. 0111H: PCLS address CSR parity error. 0112H: PCLS illegal ADDDC configuration error. 0200H: DDR4 command / address parity error. 0400H: RPQ scheduler address parity error. 0800H: 2LM unrecognized request type. 0801H: 2LM read response to an invalid scoreboard entry. 0802H: 2LM unexpected read response. 0803H: 2LM DDR4 completion to an invalid scoreboard entry. 0804H: 2LM DDRT completion to an invalid scoreboard entry. 0805H: 2LM completion FIFO overflow. 0806H: DDRT link parity error. 0807H: DDRT RID uncorrectable error. 0809H: DDRT RID FIFO overflow. 080AH: DDRT error on FNV write credits. 080BH: DDRT error on FNV read credits. 080CH: DDRT scheduler error. 080DH: DDRT FNV error. 080EH: DDRT FNV thermal error. 080FH: DDRT unexpected data packet during CMI idle. 0810H: DDRT RPQ request parity error. 0811H: DDRT WPQ request parity error. 0812H: 2LM NmFillWr CAM multiple hit error. 0813H: CMI credit oversubscription error. 0814H: CMI total credit count error. 0815H: CMI reserved credit pool error. 0816H: DDRT link ECC error.

Table 17-37. Intel IMC MC Error Codes for IA32_MCi_STATUS (i= 13—14, 17—18, 21—22, 25—26) (Contd.)

Type	Bit No.	Bit Function	Bit Description
			0817H: WDB FIFO overflow or underflow errors. 0818H: CMI request FIFO overflow error. 0819H: CMI request FIFO underflow error. 081AH: CMI response FIFO overflow error. 081BH: CMI response FIFO underflow error. 081CH: CMI miscellaneous credit errors. 081DH: CMI MC arbiter errors. 081EH: DDRT write completion FIFO overflow error. 081FH: DDRT write completion FIFO underflow error. 0820H: CMI read completion FIFO overflow error. 0821H: CMI read completion FIFO underflow error. 0822H: TME key RF parity error. 0823H: TME miscellaneous CMI errors. 0824H: TME CMI overflow error. 0825H: TME CMI underflow error. 0826H: Intel® SGX TEM secure bit mismatch detected on demand read. 0827H: TME detected underfill read completion data parity error. 0828H: 2LM Scoreboard Overflow Error. 1008H: Correctable patrol scrub error (mirror secondary example).
	28	Mirror secondary error.	Mirror secondary error.
	31:29	Reserved	Reserved
	37:32	Other Info	Other Info.
	56:38		See Chapter 16, "Machine-Check Architecture.".
Status Register Validity Indicators[1]	63:57		

NOTES:

1. These fields are architecturally defined. Refer to Chapter 16, "Machine-Check Architecture," for more information.

Additional information is reported in the IA32_MC13_MISC–IA32_MC14_MISC, IA32_MC17_MISC–IA32_MC18_MISC, IA32_MC21_MISC–IA32_MC22_MISC, and IA32_MC25_MISC–IA32_MC26_MISC MSRs. Table 17-38 lists the information reported in IA32_MCi_MISC, where i = 13–14, 17–18, 21–22, and 25–26.

Table 17-38. Additional Information Reported in IA32_MCi_MISC (i= 13–14, 17–18, 21–22, 25–26)

Bit No.	Bit Function	Bit Description
5:0	LSB	See Figure 16-8.
8:6	Address Mode	See Table 16-3.
18:9	Column	Component of sub-DIMM address. Bits 18-17: Reserved. Bit 16: Column 9. Bit 15: Column 8. Bit 14: Column 7. Bit 13: Column 6. Bit 12: Column 5. Bit 11: Column 4. Bit 10: Column 3. Bit 9: Reserved.
39:19	Row	Component of sub-DIMM address.
45:40	Bank	Component of sub-DIMM address. Bit 45: Reserved. Bit 44: Bank group 2. Bit 43: Bank address 1. Bit 42: Bank address 0. Bit 41: Bank group 1. Bit 40: Bank group 0.
51:46	Failed Device	Failing device for correctable error (not valid for uncorrectable or transient errors).
55:52	CBit	CBit
58:56	Chip Select	Chip Select
62:59	ECC Mode	0000b: SDDC 2LM. 0001b: SDDC 1LM. 0010b: SDDC + 1 2LM. 0011b: SDDC + 1 1LM. 0100b: ADDDC 2LM. 0101b: ADDDC 1LM. 0110b: ADDDC + 1 2LM. 0111b: ADDDC + 1 1LM. 1000b: Read from DDRT. 1001b: x8 SDDC. 1010b: x8 SDDC + 1. 1011b: Not a valid ECC mode. Other values: Reserved.
63	Transient	0b: 1b: Error was transient.

17.11.4 M2M Machine Check Errors

MC error codes associated with M2M for the 3rd generation Intel Xeon Scalable Processor Family with a CPUID DisplayFamily_DisplaySignature of 06_6AH are reported in the IA32_MC12_STATUS, IA32_MC16_STATUS, IA32_MC20_STATUS, and IA32_MC24_STATUS MSRs.

MC error codes associated with M2M for the 3rd generation Intel Xeon Scalable Processor Family with a CPUID DisplayFamily_DisplaySignature of 06_6CH are reported in the IA32_MC12_STATUS and IA32_MC16_STATUS MSRs.

The supported error codes follow the architectural MCACOD definition type **1MMMCCCC**; see Chapter 16, "Machine-Check Architecture."

Table 17-39. M2M MC Error Codes for IA32_MCi_STATUS (i= 12, 16, 20, 24)

Type	Bit No.	Bit Function	Bit Description
MCA Error Codes[1]	15:0	MCACOD	Compound error format: 0000 0000 1MMM CCCC
Model Specific Errors	23:16	MSCOD	Logged an MC error.
	25:24	MscodDDRType	Logged a DDR/DDRT specific error.
	26	MscodFailoverWhileResetPrep	Logged a failover specific error while preparing to reset.
	31:27	Reserved	Reserved
	37:32	Other Info	Other information.
	56:38		See Chapter 16, "Machine-Check Architecture."
Status Register Validity Indicators[1]	63:57		

NOTES:

1. These fields are architecturally defined. Refer to Chapter 16, "Machine-Check Architecture," for more information.

MC error codes associated with mirrored memory corrections are reported in the IA32_MC12_MISC, IA32_MC16_MISC, IA32_MC20_MISC, and IA32_MC24_MISC MSRs. The model-specific error codes listed in Table 17-32 also apply to IA32_MCi_MISC, where i = 12, 16, 20, 24.

17.12 INCREMENTAL DECODING INFORMATION: PROCESSOR FAMILY WITH CPUID DISPLAYFAMILY_DISPLAYMODEL SIGNATURE 06_86H, MACHINE ERROR CODES FOR MACHINE CHECK

In Intel Atom® processors based on Tremont microarchitecture with CPUID DisplayFamily_DisplaySignature 06_86H, incremental error codes for internal machine check errors from the PCU controller are reported in the register bank IA32_MC4. Table 17-34 in Section 17.11.1 lists model-specific fields to interpret error codes applicable to IA32_MC4_STATUS.

17.12.1 Integrated Memory Controller Machine Check Errors

MC error codes associated with integrated memory controllers are reported in the MSRs IA32_MC13_STATUS–IA32_MC15_STATUS. The supported error codes follow the architectural MCACOD definition type **1MMMCCCC**; see Chapter 16, "Machine-Check Architecture."

The IA32_MCi_STATUS MSR (where i = 13, 14, 15) contains information related to a machine check error if its VAL(valid) flag is set. Bit definitions are the same as those found in Table 17-37 "*Intel IMC MC Error Codes for IA32_MCi_STATUS (i= 13—14, 17—18, 21—22, 25—26)*."

The IA32_MCi_MISC MSR (where i = 13, 14, 15) contains information related memory corrections. Bit definitions are the same as those found in Table 17-38 "*Additional Information Reported in IA32_MCi_MISC (i= 13—14, 17—18, 21—22, 25—26)*."

17.12.2 M2M Machine Check Errors

MC error codes associated with M2M are reported in the IA32_MC12_STATUS MSR. The supported error codes follow the architectural MCACOD definition type **1MMMCCCC**; see Chapter 16, "Machine-Check Architecture."

Bit definitions are the same as those found in Table 17-39 "*M2M MC Error Codes for IA32_MCi_STATUS (i= 12, 16, 20, 24)*."

17.13 INCREMENTAL DECODING INFORMATION: 4TH GENERATION INTEL® XEON® SCALABLE PROCESSOR FAMILY, MACHINE ERROR CODES FOR MACHINE CHECK

In the 4th generation Intel® Xeon® Scalable Processor Family with CPUID DisplayFamily_DisplaySignature of 06_8FH, incremental error codes for internal machine check errors from the PCU controller are reported in the register bank IA32_MC4. Table 17-40 in Section 17.13.1 lists model-specific fields to interpret error codes applicable to IA32_MC4_STATUS.

17.13.1 Internal Machine Check Errors

Table 17-40. Machine Check Error Codes for IA32_MC4_STATUS

Type	Bit No.	Bit Function	Bit Description
Machine Check Error Codes[1]	15:0	MCCOD	
MCCOD	15:0	Internal Errors	The value of this field will be 0402h for the PCU and 0406h for internal firmware errors. This applies for any logged error.
Model Specific Errors	19:16	Reserved, except for the following	Model specific error code bits 19:16. If MACOD = 40CH, MSCOD encoding should be interpreted as: 01H: Instruction address out of valid space. 02H: Double bit RAM error on Instruction Fetch. 03H: Invalid OpCode seen. 04H: Stack Underflow. 05H: Stack Overflow. 06H: Data address out of valid space. 07H: Double bit RAM error on Data Fetch. For all other MACOD values, MSCOD logs the type of hardware UC (PCU/VCU) error that has occurred. There are seven errors defined: 01H: Instruction address out of valid space. 02H: Double bit RAM error on Instruction Fetch. 03H: Invalid OpCode seen. 04H: Stack Underflow. 05H: Stack Overflow. 06H: Data address out of valid space. 07H: Double bit RAM error on Data Fetch.

Table 17-40. Machine Check Error Codes for IA32_MC4_STATUS (Contd.)

Type	Bit No.	Bit Function	Bit Description
	23:20	Reserved, except for the following	Model specific error code bits 23:20. This logs the type of HW FSM error that has occurred. There are 3 errors defined: 04H: Clock/power IP response timeout. 05H: SMBus controller raised SMI. 09H: PM controller received invalid transaction.
	31:24	Reserved, except for the following	0DH: MCA_LLC_BIST_ACTIVE_TIMEOUT 0EH: MCA_DMI_TRAINING_TIMEOUT 0FH: MCA_DMI_STRAP_SET_ARRIVAL_TIMEOUT 10H: MCA_DMI_CPU_RESET_ACK_TIMEOUT 11H: MCA_MORE_THAN_ONE_LT_AGENT 14H: MCA_INCOMPATIBLE_PCH_TYPE 1EH: MCA_BIOS_RST_CPL_INVALID_SEQ 1FH: MCA_BIOS_INVALID_PKG_STATE_CONFIG 2DH: MCA_PCU_PMAX_CALIB_ERROR 2EH: MCA_TSC100_SYNC_TIMEOUT 3AH: MCA_GPSB_TIMEOUT 3BH: MCA_PMSB_TIMEOUT 3EH: MCA_IOSFSB_PMREQ_CMP_TIMEOUT 40H: MCA_SVID_VCCIN_VR_ICC_MAX_FAILURE 42H: MCA_SVID_VCCIN_VR_VOUT_FAILURE 43H: MCA_SVID_CPU_VR_CAPABILITY_ERROR 44H: MCA_SVID_CRITICAL_VR_FAILED 45H: MCA_SVID_SA_ITD_ERROR 46H: MCA_SVID_READ_REG_FAILED 47H: MCA_SVID_WRITE_REG_FAILED 4AH: MCA_SVID_PKGC_REQUEST_FAILED 4BH: MCA_SVID_IMON_REQUEST_FAILED 4CH: MCA_SVID_ALERT_REQUEST_FAILED 4DH: MCA_SVID_MCP_VR_RAMP_ERROR 56H: MCA_FIVR_PD_HARDERR 58H: MCA_WATCHDOG_TIMEOUT_PKGC_SECONDARY 59H: MCA_WATCHDOG_TIMEOUT_PKGC_MAIN 5AH: MCA_WATCHDOG_TIMEOUT_PKGS_MAIN 5BH: MCA_WATCHDOG_TIMEOUT_MSG_CH_FSM 5CH: MCA_WATCHDOG_TIMEOUT_BULK_CR_FSM 5DH: MCA_WATCHDOG_TIMEOUT_IOSFSB_FSM 60H: MCA_PKGS_SAFE_WP_TIMEOUT 61H: MCA_PKGS_CPD_UNCPD_TIMEOUT 62H: MCA_PKGS_INVALID_REQ_PCH 63H: MCA_PKGS_INVALID_REQ_INTERNAL 64H: MCA_PKGS_INVALID_RSP_INTERNAL 65H-7AH: MCA_PKGS_RESET_PREP_TIMEOUT 7BH: MCA_PKGS_SMBUS_VPP_PAUSE_TIMEOUT

Table 17-40. Machine Check Error Codes for IA32_MC4_STATUS (Contd.)

Type	Bit No.	Bit Function	Bit Description
			7CH: MCA_PKGS_SMBUS_MCP_PAUSE_TIMEOUT 7DH: MCA_PKGS_SMBUS_SPD_PAUSE_TIMEOUT 80H: MCA_PKGC_DISP_BUSY_TIMEOUT 81H: MCA_PKGC_INVALID_RSP_PCH 83H: MCA_PKGC_WATCHDOG_HANG_CBZ_DOWN 84H: MCA_PKGC_WATCHDOG_HANG_CBZ_UP 87H: MCA_PKGC_WATCHDOG_HANG_C2_BLKMASTER 88H: MCA_PKGC_WATCHDOG_HANG_C2_PSLIMIT 89H: MCA_PKGC_WATCHDOG_HANG_SETDISP 8BH: MCA_PKGC_ALLOW_L1_ERROR 90H: MCA_RECOVERABLE_DIE_THERMAL_TOO_HOT A0H: MCA_ADR_SIGNAL_TIMEOUT A1H: MCA_BCLK_FREQ_OC_ABOVE_THRESHOLD B0H: MCA_DISPATCHER_RUN_BUSY_TIMEOUT C0H: MCA_DISPATCHER_RUN_BUSY_TIMEOUT
	37:32	ENH_MCA_AVAIL0	Available when Enhanced MCA is in use.
	52:38	CORR_ERR_COUNT	Correctable error count.
	54:53	CORRERRORSTATUSIND	These bits are used to indicate when the number of corrected errors has exceeded the safe threshold to the point where an uncorrected error has become more likely to happen. Table 3 shows the encoding of these bits.
	56:55	ENH_MCA_AVAIL1	Available when Enhanced MCA is in use.
Status Register Validity Indicators[1]	63:57		

NOTES:

1. These fields are architecturally defined. Refer to Chapter 16, "Machine-Check Architecture," for more information.

MC error codes associated with the link interconnect agents are reported in the IA32_MC5_STATUS MSR. The supported error codes follow the architectural MCACOD definition type **1PPTRRRRIILL**; see Chapter 16, "Machine-Check Architecture."

Table 17-41 lists model-specific fields to interpret error codes applicable to IA32_MC5_STATUS.

Table 17-41. Interconnect MC Error Codes for IA32_MC5_STATUS

Type	Bit No.	Bit Function	Bit Description
MCA Error Codes[1]	15:0	MCACOD	Bus error format: 1PPTRRRRIILL The two supported compound error codes: ▪ 0x0C0F: Unsupported/Undefined Packet. ▪ 0x0E0F: For all other corrected and uncorrected errors.
Model Specific Errors	21:16	MSCOD	The encoding of Uncorrectable (UC) errors are: 00H: Phy Initialization Failure (NumInit). 01H: Phy Detected Drift Buffer Alarm. 02H: Phy Detected Latency Buffer Rollover. 10H: LL Rx detected CRC error: unsuccessful LLR (entered Abort state). 11H: LL Rx Unsupported/Undefined packet. 12H: LL or Phy Control Error. 13H: LL Rx Parameter Exception. 15H: LL Rx SGX MAC Error. 1FH: LL Detected Control Error. The encoding of correctable (COR) errors are: 20H: Phy Initialization Abort. 21H: Phy Inband Reset. 22H: Phy Lane failure, recovery in x8 width. 23H: Phy L0c error corrected without Phy reset. 24H: Phy L0c error triggering Phy reset. 25H: Phy L0p exit error corrected with reset. 30H: LL Rx detected CRC error: successful LLR without Phy Re-init. 31H: LL Rx detected CRC error: successful LLR with Phy Re-init. All other values are reserved.
	31:22	MSCOD_SPARE	The definition below applies to MSCOD 12h (UC LL or Phy Control Errors). [Bit 22] : Phy Control Error. [Bit 23] : Unexpected Retry.Ack flit. [Bit 24] : Unexpected Retry.Req flit. [Bit 25] : RF parity error. [Bit 26] : Routeback Table error. [Bit 27] : Unexpected Tx Protocol flit (EOP, Header or Data). [Bit 28] : Rx Header-or-Credit BGF credit overflow/underflow. [Bit 29] : Link Layer Reset still in progress when Phy enters L0 (Phy training should not be enabled until after LL reset is complete as indicated by KTILCL.LinkLayerReset going back to 0). [Bit 30] : Link Layer reset initiated while protocol traffic not idle. [Bit 31] : Link Layer Tx Parity Error.
	37:32	OTHER_INFO	Other Info.
	56:38	Corrected Error Cnt	See Chapter 16, "Machine-Check Architecture."
Status Register Validity Indicators[1]	63:57		

NOTES:

1. These fields are architecturally defined. Refer to Chapter 16, "Machine-Check Architecture," for more information.

17.13.2 Integrated Memory Controller Machine Check Errors

MC error codes associated with integrated memory controllers for the 4th generation Intel® Xeon® Scalable Processor Family based on Sapphire Rapids microarchitecture are reported in the IA32_MC13_STATUS—IA32_MC20_STATUS MSRs.

The supported error codes follow the architectural MCACOD definition type **1MMMCCCC**; see Chapter 16, "Machine-Check Architecture."

Table 17-42. Intel IMC MC Error Codes for IA32_MCi_STATUS (i= 13—20)

Type	Bit No.	Bit Function	Bit Description
MCA Error Codes[1]	15:0	MCACOD	Memory Controller error format: 0000 0000 1MMM CCCC
Model Specific Errors	31:16	Reserved, except for the following	0001H: Address parity error. 0002H: Data parity error. 0003H: Data ECC error. 0004H: Data byte enable parity error. 0007H: Transaction ID parity error. 0008H: Corrected patrol scrub error. 0010H: Uncorrected patrol scrub error. 0020H: Corrected spare error. 0040H: Uncorrected spare error. 0080H: Corrected read error. 00A0H: Uncorrected read error. 00C0H: Uncorrected metadata. 0100H: WDB read parity error. 0108H: DDR link failure. 0200H: DDR5 command / address parity error. 0400H: RPQ0 parity (primary) error. 0800H: DDR-T bad request. 0801H: DDR Data response to an invalid entry. 0802H: DDR data response to an entry not expecting data. 0803H: DDR5 completion to an invalid entry. 0804H: DDR-T completion to an invalid entry. 0805H: DDR data/completion FIFO overflow. 0806H: DDR-T ERID correctable parity error. 0807H: DDR-T ERID uncorrectable error. 0808H: DDR-T interrupt received while outstanding interrupt was not ACKed. 0809H: ERID FIFO overflow. 080AH: DDR-T error on FNV write credits. 080BH: DDR-T error on FNV read credits. 080CH: DDR-T scheduler error. 080DH: DDR-T FNV error event. 080EH: DDR-T FNV thermal event. 080FH: CMI packet while idle. 0810H: DDR_T_RPQ_REQ_PARITY_ERR. 0811H: DDR_T_WPQ_REQ_PARITY_ERR. 0812H: 2LM_NMFILLWR_CAM_ERR.

Table 17-42. Intel IMC MC Error Codes for IA32_MCi_STATUS (i= 13—20)

Type	Bit No.	Bit Function	Bit Description
			0813H: CMI_CREDIT_OVERSUB_ERR. 0814H: CMI_CREDIT_TOTAL_ERR. 0815H: CMI_CREDIT_RSVD_POOL_ERR. 0816H: DDR_T_RD_ERROR. 0817H: WDB_FIFO_ERR. 0818H: CMI_REQ_FIFO_OVERFLOW. 0819H: CMI_REQ_FIFO_UNDERFLOW. 081AH: CMI_RSP_FIFO_OVERFLOW. 081BH: CMI_RSP_FIFO_UNDERFLOW. 081CH: CMI_MISC_MC_CRDT_ERRORS. 081DH: CMI_MISC_MC_ARB_ERRORS. 081EH: DDR_T_WR_CMPL_FIFO_OVERFLOW. 081FH: DDR_T_WR_CMPL_FIFO_UNDERFLOW. 0820H: CMI_RD_CPL_FIFO_OVERFLOW. 0821H: CMI_RD_CPL_FIFO_UNDERFLOW. 0822H: TME_KEY_PAR_ERR. 0823H: TME_CMI_MISC_ERR. 0824H: TME_CMI_OVFL_ERR. 0825H: TME_CMI_UFL_ERR. 0826H: TME_TEM_SECURE_ERR. 0827H: TME_UFILL_PAR_ERR. 0829H: INTERNAL_ERR. 082AH: TME_INTEGRITY_ERR. 082BH: TME_TDX_ERR 082CH: TME_UFILL_TEM_SECURE_ERR. 082DH: TME_KEY_POISON_ERR. 082EH: TME_SECURITY_ENGINE_ERR. 1008H: CORR_PATSCRUB_MIRR2ND_ERR. 1010H: UC_PATSCRUB_MIRR2ND_ERR. 1020H: COR_SPARE_MIRR2ND_ERR. 1040H: UC_SPARE_MIRR2ND_ERR. 1080H: HA_RD_MIRR2ND_ERR. 10A0H: HA_UNCORR_RD_MIRR2ND_ERR.
	37:32	Other Info	Other Info.
	56:38		See Chapter 16, “Machine-Check Architecture.”
Status Register Validity Indicators[1]	63:57		

NOTES:

1. These fields are architecturally defined. Refer to Chapter 16, “Machine-Check Architecture,” for more information.

Additional information is reported in the IA32_MC13_MISC—IA32_MC20_MISC MSRs. Table 17-43 lists the information reported in IA32_MCi_MISC, where i = 13—20.

Table 17-43. Additional Information Reported in IA32_MCi_MISC (i= 13—20)

Bit No.	Bit Function	Bit Description
5:0	LSB	See Figure 16-8.
8:6	Address Mode	See Table 16-3.
18:9	Column	Column address for the last retry. To get the real column address from this field, shift the value left by 2.
36:19	Row	Component of sub-DIMM address.
42:37	Bank ID	Component of sub-DIMM address. Bit 42: Reserved. Bit 41: Bank group 2. Bit 40: Bank address 1. Bit 39: Bank address 0. Bit 38: Bank group 1. Bit 37: Bank group 0.
48:43	Failed Device	Failing device for correctable error (not valid for uncorrectable or transient errors).
50:49	Reserved	Reserved
55:51	Failed Device Number	In HBM mode, holds the failed device number for upper 32 bytes.
55:52	CBit	In DDR mode, bits 54-52: sub_rank[2:0]; bit 55: reserved.
58:56	Chip Select	Chip Select
62:59	ECC Mode	0000b: SDDC 2LM. 0001b: SDDC 1LM. 0010b: SDDC + 1 2LM. 0011b: SDDC + 1 1LM. 0100b: ADDDC 2LM. 0101b: ADDDC 1LM. 0110b: ADDDC + 1 2LM. 0111b: ADDDC + 1 1LM. 1000b: Read from DDRT. 1011b: Not a valid ECC mode. For HBM mode: 0001b: 64B read. 1001b: 32B read. Other values: Reserved.
63	Transient	Indicates if the error was a transient error. A transient error is only indicated for demand reads, underfill reads, and patrol. If there was a WDBParity Error, this field indicates the WDB ID bit 6.

17.13.3 M2M Machine Check Errors

MC error codes associated with M2M for the 4th generation Intel Xeon Scalable Processor Family with a CPUID DisplayFamily_DisplaySignature of 06_8FH are reported in the IA32_MC12_STATUS MSR.

The supported error codes follow the architectural MCACOD definition type **1MMMCCCC**; see Chapter 16, "Machine-Check Architecture."

Table 17-44. M2M MC Error Codes for IA32_MC12_STATUS

Type	Bit No.	Bit Function	Bit Description
MCA Error Codes[1]	15:0	MCACOD	Compound error format: 0000 0000 1MMM CCCC
Model Specific Errors	23:16	MscodDataRdErr	00H: No error (default). 01H: Read ECC error (MemSpecRd; MemRd; MemRdData; MemRdXto*; MemInv; MemInvXto*; MemInvItoX). 02H: Bucket1 error. 03H: RdTrkr Parity error. 05H: Prefetch channel mismatch. 07H: Read completion parity error. 08H: Response parity error. 09H: Timeout error. 0AH: CMI reserved credit pool error. 0BH: CMI total credit count error. 0CH: CMI credit oversubscription error.
	25:24	MscodDDRType	00: Not logged, whether error on DDR4 or DDRT. 01: HBM errors.
	31:26	Reserved	Reserved
	37:32	Other Info	Other Info.
	56:38		See Chapter 16, "Machine-Check Architecture."
Status Register Validity Indicators[1]	63:57		

NOTES:

1. These fields are architecturally defined. Refer to Chapter 16, "Machine-Check Architecture," for more information.

17.13.4 High Bandwidth Memory Machine Check Errors

MC error codes associated with high bandwidth memory for the 4th generation Intel Xeon Scalable Processor Family are reported in the IA32_MC29_STATUS—IA32_MC31_STATUS MSRs.

17.14 INCREMENTAL DECODING INFORMATION: PROCESSOR FAMILY 0FH, MACHINE ERROR CODES FOR MACHINE CHECK

Table 17-45 provides information for interpreting additional family 0FH model-specific fields for external bus errors. These errors are reported in the IA32_MCi_STATUS MSRs. They are reported architecturally as compound errors with a general form of **0000 1PPT RRRR IILL** in the MCA error code field. See Chapter 16 for information on the interpretation of compound error codes.

Table 17-45. Incremental Decoding Information: Processor Family 0FH, Machine Error Codes for Machine Check

Type	Bit No.	Bit Function	Bit Description
MCA Error Codes[1]	15:0		
Model-Specific Error Codes	16	FSB Address Parity	Address parity error detected: 1: Address parity error detected. 0: No address parity error.
	17	Response Hard Fail	Hardware failure detected on response.
	18	Response Parity	Parity error detected on response.
	19	PIC and FSB Data Parity	Data Parity detected on either PIC or FSB access.
	20	Processor Signature = 00000F04H: Invalid PIC Request All other processors: Reserved	Processor Signature = 00000F04H: Indicates error due to an invalid PIC request access was made to PIC space with WB memory): 1: Invalid PIC request error. 0: No Invalid PIC request error. Reserved
	21	Pad State Machine	The state machine that tracks P and N data-strobe relative timing has become unsynchronized or a glitch has been detected.
	22	Pad Strobe Glitch	Data strobe glitch.
	23	Pad Address Glitch	Address strobe glitch.
Other Information	56:24	Reserved	Reserved
Status Register Validity Indicators[1]	63:57		

NOTES:

1. These fields are architecturally defined. Refer to Chapter 16, "Machine-Check Architecture," for more information.

Table 17-10 provides information on interpreting additional family 0FH model specific fields for cache hierarchy errors. These errors are reported in one of the IA32_MCi_STATUS MSRs. These errors are reported, architecturally, as compound errors with a general form of **0000 0001 RRRR TTLL** in the MCA error code field. See Chapter 16 for how to interpret the compound error code.

17.14.1 Model-Specific Machine Check Error Codes for the Intel® Xeon® Processor MP 7100 Series

The Intel Xeon processor MP 7100 series has five register banks which contain information related to Machine Check Errors. MCi_STATUS[63:0] refers to all five register banks. MC0_STATUS[63:0] through MC3_STATUS[63:0] is the same as previous generations of Intel Xeon processors within Family 0FH. MC4_STATUS[63:0] is the main error logging for the processor's L3 and front side bus errors. It supports the L3 Errors, Bus and Interconnect Errors Compound Error Codes in the MCA Error Code Field.

Table 17-46. MCi_STATUS Register Bit Definition

Bit Field Name	Bits	Description
MCA_Error_Code	15:0	This field specifies the machine check architecture defined error code for the machine check error condition detected. The machine check architecture defined error codes are guaranteed to be the same for all Intel Architecture processors that implement the machine check architecture. See tables below.
Model_Specific_Error_Code	31:16	This field specifies the model specific error code that uniquely identifies the machine check error condition detected. The model specific error codes may differ among Intel Architecture processors for the same Machine Check Error condition. See tables below.
Other_Info	56:32	The functions of the bits in this field are implementation specific and are not part of the machine check architecture. Software that is intended to be portable among Intel Architecture processors should not rely on the values in this field.
PCC	57	The Processor Context Corrupt flag indicates that the state of the processor might have been corrupted by the error condition detected and that reliable restarting of the processor may not be possible. When clear, this flag indicates that the error did not affect the processor's state. This bit will always be set for MC errors, which are not corrected.
ADDRV	58	The MC_ADDR register valid flag indicates that the MC_ADDR register contains the address where the error occurred. When clear, this flag indicates that the MC_ADDR register does not contain the address where the error occurred. The MC_ADDR register should not be read if the ADDRV bit is clear.
MISCV	59	The MC_MISC register valid flag indicates that the MC_MISC register contains additional information regarding the error. When clear, this flag indicates that the MC_MISC register does not contain additional information regarding the error. MC_MISC should not be read if the MISCV bit is not set.
EN	60	The error enabled flag indicates that reporting of the machine check exception for this error was enabled by the associated flag bit of the MC_CTL register. Note that correctable errors do not have associated enable bits in the MC_CTL register so the EN bit should be clear when a correctable error is logged.
UC	61	The error uncorrected flag indicates that the processor did not correct the error condition. When clear, this flag indicates that the processor was able to correct the event condition.
OVER	62	The machine check overflow flag indicates that a machine check error occurred while the results of a previous error were still in the register bank (i.e., the VAL bit was already set in the MC_STATUS register). The processor sets the OVER flag and software is responsible for clearing it. Enabled errors are written over disabled errors, and uncorrected errors are written over corrected events. Uncorrected errors are not written over previous valid uncorrected errors.
VAL	63	The MC_STATUS register valid flag indicates that the information within the MC_STATUS register is valid. When this flag is set, the processor follows the rules given for the OVER flag in the MC_STATUS register when overwriting previously valid entries. The processor sets the VAL flag and software is responsible for clearing it.

17.14.1.1 Processor Machine Check Status Register MCA Error Code Definition

The Intel Xeon processor MP 7100 series uses compound MCA Error Codes for logging its CBC internal machine check errors, L3 Errors, and Bus/Interconnect Errors. It defines additional Machine Check error types (IA32_MC4_STATUS[15:0]) beyond those defined in Chapter 16. Table 17-47 lists these model-specific MCA error codes. Error code details are specified in MC4_STATUS [31:16]; see Section 17.14.3, the "Model Specific Error Code" field. The information in the "Other_Info" field (MC4_STATUS[56:32]) is common to the three processor error types and contains a correctable event count and specifies the MC4_MISC register format.

Table 17-47. Incremental MCA Error Code for Intel® Xeon® Processor MP 7100

Processor MCA_Error_Code (MC4_STATUS[15:0])			
Type	**Error Code**	**Binary Encoding**	**Meaning**
C	Internal Error	0000 0100 0000 0000	Internal Error Type Code.
A	L3 Tag Error	0000 0001 0000 1011	L3 Tag Error Type Code.
B	Bus and Interconnect Error	0000 100x 0000 1111	Not used, but this encoding is reserved for compatibility with other MCA implementations.
		0000 101x 0000 1111	Not used, but this encoding is reserved for compatibility with other MCA implementations.
		0000 110x 0000 1111	Not used, but this encoding is reserved for compatibility with other MCA implementations.
		0000 1110 0000 1111	Bus and Interconnection Error Type Code.
		0000 1111 0000 1111	Not used, but this encoding is reserved for compatibility with other MCA implementations.

The **bold faced** binary encodings are the only encodings used by the processor for MC4_STATUS[15:0].

17.14.2 Other_Info Field (All MCA Error Types)

The MC4_STATUS[56:32] field is common to the processor's three MCA error types (A, B, and C).

Table 17-48. Other Information Field Bit Definition

Bit Field Name	Bits	Description
39:32	8-bit Correctable Event Count	This field holds a count of the number of correctable events since cold reset. This is a saturating counter; the counter begins at 1 (with the first error) and saturates at a count of 255.
41:40	MC4_MISC Format Type	The value in this field specifies the format of information in the MC4_MISC register. Currently, only two values are defined. Valid only when MISCV is asserted.
43:42	Reserved	Reserved
51:44	ECC Syndrome	ECC syndrome value for a correctable ECC event when the "Valid ECC syndrome" bit is asserted.
52	Valid ECC Syndrome	Set when a correctable ECC event supplies the ECC syndrome.
54:53	Threshold-Based Error Status	00: No tracking. No hardware status tracking is provided for the structure reporting this event. 01: Green. Status tracking is provided for the structure posting the event; the current status is green (below threshold). 10: Yellow. Status tracking is provided for the structure posting the event; the current status is yellow (above threshold). 11: Reserved for future use. Valid only if Valid bit (bit 63) is set. Undefined if the UC bit (bit 61) is set.
56:55	Reserved	Reserved

17.14.3 Processor Model Specific Error Code Field

17.14.3.1 MCA Error Type A: L3 Error

Note: The Model Specific Error Code field in MC4_STATUS (bits 31:16).

Table 17-49. Type A: L3 Error Codes

Bit Num	Sub-Field Name	Description	Legal Value(s)
18:16	L3 Error Code	Describes the L3 error encountered	000: No error. 001: More than one way reporting a correctable event. 010: More than one way reporting an uncorrectable error. 011: More than one way reporting a tag hit. 100: No error. 101: One way reporting a correctable event. 110: One way reporting an uncorrectable error. 111: One or more ways reporting a correctable event while one or more ways are reporting an uncorrectable error.
20:19	---	Reserved	00
31:21	---	Fixed pattern	0010_0000_000

17.14.3.2 Processor Model Specific Error Code Field Type B: Bus and Interconnect Error

Note: The Model Specific Error Code field in MC4_STATUS (bits 31:16).

Table 17-50. Type B: Bus and Interconnect Error Codes

Bit Num	Sub-Field Name	Description
16	FSB Request Parity	Parity error detected during FSB request phase.
17	Core0 Addr Parity	Parity error detected on Core 0 request's address field.
18	Core1 Addr Parity	Parity error detected on Core 1 request's address field.
19	Reserved	Reserved
20	FSB Response Parity	Parity error on FSB response field detected.
21	FSB Data Parity	FSB data parity error on inbound data detected.
22	Core0 Data Parity	Data parity error on data received from Core 0 detected.
23	Core1 Data Parity	Data parity error on data received from Core 1 detected.
24	IDS Parity	Detected an Enhanced Defer parity error (phase A or phase B).
25	FSB Inbound Data ECC	Data ECC event to error on inbound data (correctable or uncorrectable).
26	FSB Data Glitch	Pad logic detected a data strobe 'glitch' (or sequencing error).
27	FSB Address Glitch	Pad logic detected a request strobe 'glitch' (or sequencing error).
31:28	Reserved	Reserved

Exactly one of the bits defined in the preceding table will be set for a Bus and Interconnect Error. The Data ECC can be correctable or uncorrectable; the MC4_STATUS.UC bit distinguishes between correctable and uncorrectable cases with the Other_Info field possibly providing the ECC Syndrome for correctable errors. All other errors for this processor MCA Error Type are uncorrectable.

17.14.3.3 Processor Model Specific Error Code Field Type C: Cache Bus Controller Error

Table 17-51. Type C: Cache Bus Controller Error Codes

MC4_STATUS[31:16] (MSCE) Value	Error Description
0000_0000_0000_0001 0001H	Inclusion Error from Core 0.
0000_0000_0000_0010 0002H	Inclusion Error from Core 1.
0000_0000_0000_0011 0003H	Write Exclusive Error from Core 0.
0000_0000_0000_0100 0004H	Write Exclusive Error from Core 1.
0000_0000_0000_0101 0005H	Inclusion Error from FSB.
0000_0000_0000_0110 0006H	SNP Stall Error from FSB.
0000_0000_0000_0111 0007H	Write Stall Error from FSB.
0000_0000_0000_1000 0008H	FSB Arb Timeout Error.
0000_0000_0000_1001 0009H	CBC OOD Queue Underflow/overflow.
0000_0001_0000_0000 0100H	Enhanced Intel SpeedStep Technology TM1-TM2 Error.
0000_0010_0000_0000 0200H	Internal Timeout Error.
0000_0011_0000_0000 0300H	Internal Timeout Error.
0000_0100_0000_0000 0400H	Intel® Cache Safe Technology Queue Full Error or Disabled-ways-in-a-set overflow.
1100_0000_0000_0001 C001H	Correctable ECC event on outgoing FSB data.
1100_0000_0000_0010 C002H	Correctable ECC event on outgoing Core 0 data.
1100_0000_0000_0100 C004H	Correctable ECC event on outgoing Core 1 data.
1110_0000_0000_0001 E001H	Uncorrectable ECC error on outgoing FSB data.
1110_0000_0000_0010 E002H	Uncorrectable ECC error on outgoing Core 0 data.
1110_0000_0000_0100 E004H	Uncorrectable ECC error on outgoing Core 1 data.
— All other encodings —	Reserved

All errors, except for the correctable ECC types, in this table are uncorrectable. The correctable ECC events may supply the ECC syndrome in the Other_Info field of the MC4_STATUS MSR.

Table 17-52. Decoding Family 0FH Machine Check Codes for Cache Hierarchy Errors

Type	Bit No.	Bit Function	Bit Description
MCA error codes[1]	15:0		
Model Specific Error Codes	17:16	Tag Error Code	Contains the tag error code for this machine check error: 00: No error detected. 01: Parity error on tag miss with a clean line. 10: Parity error/multiple tag match on tag hit. 11: Parity error/multiple tag match on tag miss.
	19:18	Data Error Code	Contains the data error code for this machine check error: 00: No error detected. 01: Single bit error. 10: Double bit error on a clean line. 11: Double bit error on a modified line.
	20	L3 Error	This bit is set if the machine check error originated in the L3 (it can be ignored for invalid PIC request errors): 1: L3 error. 0: L2 error.
	21	Invalid PIC Request	Indicates error due to invalid PIC request access was made to PIC space with WB memory: 1: Invalid PIC request error. 0: No invalid PIC request error.
	31:22	Reserved	Reserved
Other Information	39:32	8-bit Error Count	Holds a count of the number of errors since reset. The counter begins at 0 for the first error and saturates at a count of 255.
	56:40	Reserved	Reserved
Status Register Validity Indicators[1]	63:57		

NOTES:

1. These fields are architecturally defined. Refer to Chapter 16, “Machine-Check Architecture,” for more information.

CHAPTER 18
DEBUG, BRANCH PROFILE, TSC, AND INTEL® RESOURCE DIRECTOR TECHNOLOGY (INTEL® RDT) FEATURES

NOTE

This chapter makes numerous references to last-branch recording (LBR) facilities. Unless noted otherwise, all such references in this chapter are to an earlier non-architectural form of the feature. Chapter 19 defines an architectural form of last-branch recording that is supported on newer processors.

Intel 64 and IA-32 architectures provide debug facilities for use in debugging code and monitoring performance. These facilities are valuable for debugging application software, system software, and multitasking operating systems. Debug support is accessed using debug registers (DR0 through DR7) and model-specific registers (MSRs):

- Debug registers hold the addresses of memory and I/O locations called breakpoints. Breakpoints are user-selected locations in a program, a data-storage area in memory, or specific I/O ports. They are set where a programmer or system designer wishes to halt execution of a program and examine the state of the processor by invoking debugger software. A debug exception (#DB) is generated when a memory or I/O access is made to a breakpoint address.
- MSRs monitor branches, interrupts, and exceptions; they record addresses of the last branch, interrupt or exception taken and the last branch taken before an interrupt or exception.
- Time stamp counter is described in Section 18.17, "Time-Stamp Counter".
- Features which allow monitoring of shared platform resources such as the L3 cache are described in Section 18.18, "Intel® Resource Director Technology (Intel® RDT) Monitoring Features".
- Features which enable control over shared platform resources are described in Section 18.19, "Intel® Resource Director Technology (Intel® RDT) Allocation Features".

18.1 OVERVIEW OF DEBUG SUPPORT FACILITIES

The following processor facilities support debugging and performance monitoring:

- **Debug exception (#DB) —** Transfers program control to a debug procedure or task when a debug event occurs.
- **Breakpoint exception (#BP) —** See breakpoint instruction (INT3) below.
- **Breakpoint-address registers (DR0 through DR3) —** Specifies the addresses of up to 4 breakpoints.
- **Debug status register (DR6) —** Reports the conditions that were in effect when a debug or breakpoint exception was generated.
- **Debug control register (DR7) —** Specifies the forms of memory or I/O access that cause breakpoints to be generated.
- **T (trap) flag, TSS —** Generates a debug exception (#DB) when an attempt is made to switch to a task with the T flag set in its TSS.
- **RF (resume) flag, EFLAGS register —** Suppresses multiple exceptions to the same instruction.
- **TF (trap) flag, EFLAGS register —** Generates a debug exception (#DB) after every execution of an instruction.
- **Breakpoint instruction (INT3) —** Generates a breakpoint exception (#BP) that transfers program control to the debugger procedure or task. This instruction is an alternative way to set instruction breakpoints. It is especially useful when more than four breakpoints are desired, or when breakpoints are being placed in the source code.

- **Last branch recording facilities** — Store branch records in the last branch record (LBR) stack MSRs for the most recent taken branches, interrupts, and/or exceptions in MSRs. A branch record consist of a branch-from and a branch-to instruction address. Send branch records out on the system bus as branch trace messages (BTMs).

These facilities allow a debugger to be called as a separate task or as a procedure in the context of the current program or task. The following conditions can be used to invoke the debugger:

- Task switch to a specific task.
- Execution of the breakpoint instruction.
- Execution of any instruction.
- Execution of an instruction at a specified address.
- Read or write to a specified memory address/range.
- Write to a specified memory address/range.
- Input from a specified I/O address/range.
- Output to a specified I/O address/range.
- Attempt to change the contents of a debug register.

18.2 DEBUG REGISTERS

Eight debug registers (see Figure 18-1 for 32-bit operation and Figure 18-2 for 64-bit operation) control the debug operation of the processor. These registers can be written to and read using the move to/from debug register form of the MOV instruction. A debug register may be the source or destination operand for one of these instructions.

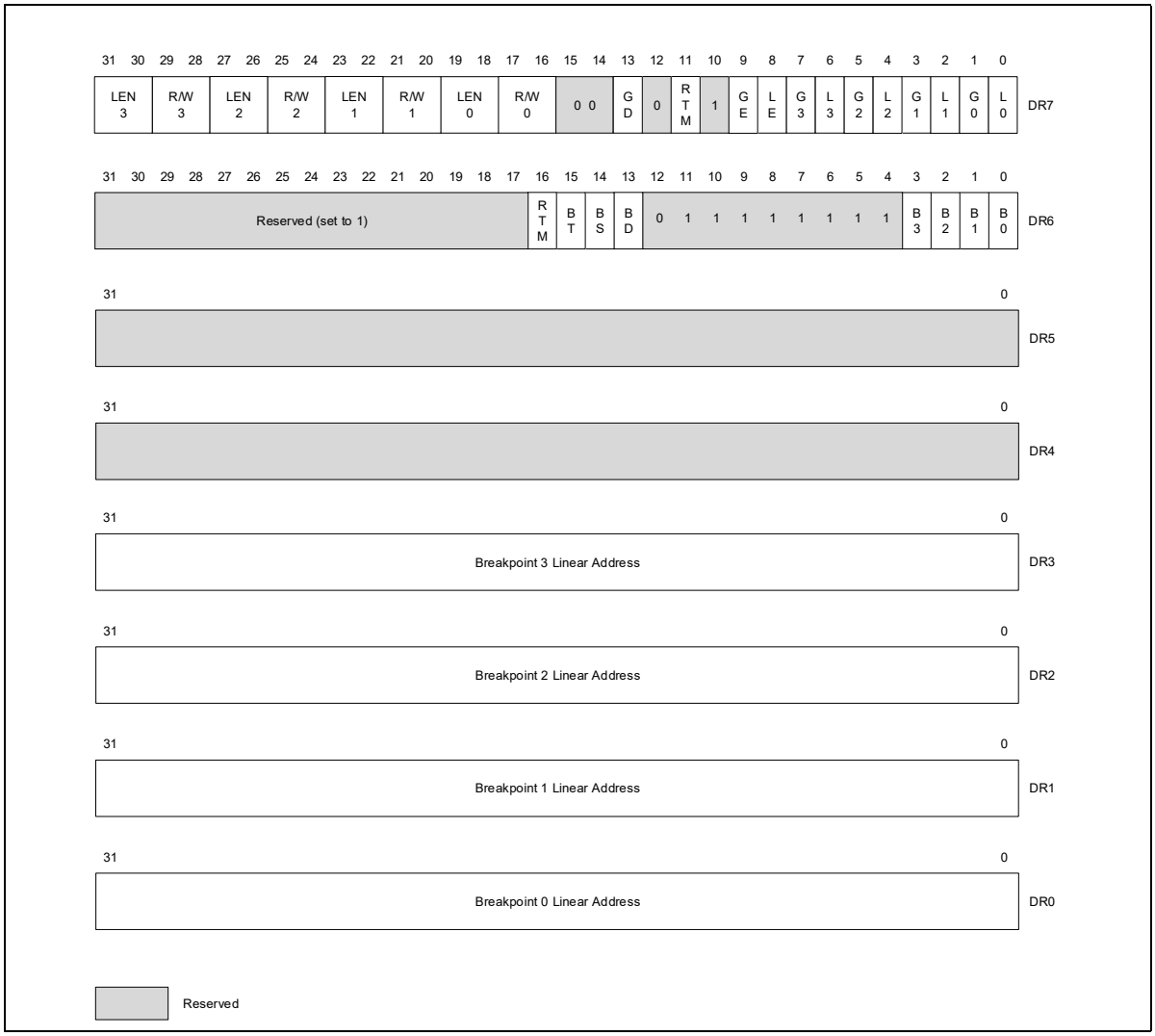

Figure 18-1. Debug Registers

Debug registers are privileged resources; a MOV instruction that accesses these registers can only be executed in real-address mode, in SMM or in protected mode at a CPL of 0. An attempt to read or write the debug registers from any other privilege level generates a general-protection exception (#GP).

The primary function of the debug registers is to set up and monitor from 1 to 4 breakpoints, numbered 0 though 3. For each breakpoint, the following information can be specified:

- The linear address where the breakpoint is to occur.
- The length of the breakpoint location: 1, 2, 4, or 8 bytes (refer to the notes in Section 18.2.4).
- The operation that must be performed at the address for a debug exception to be generated.
- Whether the breakpoint is enabled.
- Whether the breakpoint condition was present when the debug exception was generated.

The following paragraphs describe the functions of flags and fields in the debug registers.

18.2.1 Debug Address Registers (DR0-DR3)

Each of the debug-address registers (DR0 through DR3) holds the 32-bit linear address of a breakpoint (see Figure 18-1). Breakpoint comparisons are made before physical address translation occurs. The contents of debug register DR7 further specifies breakpoint conditions.

18.2.2 Debug Registers DR4 and DR5

Debug registers DR4 and DR5 are reserved when debug extensions are enabled (when the DE flag in control register CR4 is set) and attempts to reference the DR4 and DR5 registers cause invalid-opcode exceptions (#UD). When debug extensions are not enabled (when the DE flag is clear), these registers are aliased to debug registers DR6 and DR7.

18.2.3 Debug Status Register (DR6)

The debug status register (DR6) reports debug conditions that were sampled at the time the last debug exception was generated (see Figure 18-1). Updates to this register only occur when an exception is generated. The flags in this register show the following information:

- **B0 through B3 (breakpoint condition detected) flags (bits 0 through 3) —** Indicates (when set) that its associated breakpoint condition was met when a debug exception was generated. These flags are set if the condition described for each breakpoint by the LEN*n*, and R/W*n* flags in debug control register DR7 is true. They may or may not be set if the breakpoint is not enabled by the Ln or the Gn flags in register DR7. Therefore on a #DB, a debug handler should check only those B0-B3 bits which correspond to an enabled breakpoint.
- **BD (debug register access detected) flag (bit 13) —** Indicates that the next instruction in the instruction stream accesses one of the debug registers (DR0 through DR7). This flag is enabled when the GD (general detect) flag in debug control register DR7 is set. See Section 18.2.4, "Debug Control Register (DR7)," for further explanation of the purpose of this flag.
- **BS (single step) flag (bit 14) —** Indicates (when set) that the debug exception was triggered by the single-step execution mode (enabled with the TF flag in the EFLAGS register). The single-step mode is the highest-priority debug exception. When the BS flag is set, any of the other debug status bits also may be set.
- **BT (task switch) flag (bit 15) —** Indicates (when set) that the debug exception resulted from a task switch where the T flag (debug trap flag) in the TSS of the target task was set. See Section 8.2.1, "Task-State Segment (TSS)," for the format of a TSS. There is no flag in debug control register DR7 to enable or disable this exception; the T flag of the TSS is the only enabling flag.
- **RTM (restricted transactional memory) flag (bit 16)** — Indicates (when **clear**) that a debug exception (#DB) or breakpoint exception (#BP) occurred inside an RTM region while advanced debugging of RTM transactional regions was enabled (see Section 18.3.3). This bit is set for any other debug exception (including all those that occur when advanced debugging of RTM transactional regions is not enabled). This bit is always 1 if the processor does not support RTM.

Certain debug exceptions may clear bits 0-3. The remaining contents of the DR6 register are never cleared by the processor. To avoid confusion in identifying debug exceptions, debug handlers should clear the register (except bit 16, which they should set) before returning to the interrupted task.

18.2.4 Debug Control Register (DR7)

The debug control register (DR7) enables or disables breakpoints and sets breakpoint conditions (see Figure 18-1). The flags and fields in this register control the following things:

- **L0 through L3 (local breakpoint enable) flags (bits 0, 2, 4, and 6) —** Enables (when set) the breakpoint condition for the associated breakpoint for the current task. When a breakpoint condition is detected and its associated L*n* flag is set, a debug exception is generated. The processor automatically clears these flags on every task switch to avoid unwanted breakpoint conditions in the new task.
- **G0 through G3 (global breakpoint enable) flags (bits 1, 3, 5, and 7) —** Enables (when set) the breakpoint condition for the associated breakpoint for all tasks. When a breakpoint condition is detected and its

associated G*n* flag is set, a debug exception is generated. The processor does not clear these flags on a task switch, allowing a breakpoint to be enabled for all tasks.

- **LE and GE (local and global exact breakpoint enable) flags (bits 8, 9) —** This feature is not supported in the P6 family processors, later IA-32 processors, and Intel 64 processors. When set, these flags cause the processor to detect the exact instruction that caused a data breakpoint condition. For backward and forward compatibility with other Intel processors, we recommend that the LE and GE flags be set to 1 if exact breakpoints are required.
- **RTM (restricted transactional memory) flag (bit 11)** — Enables (when set) advanced debugging of RTM transactional regions (see Section 18.3.3). This advanced debugging is enabled only if IA32_DEBUGCTL.RTM is also set.
- **GD (general detect enable) flag (bit 13) —** Enables (when set) debug-register protection, which causes a debug exception to be generated prior to any MOV instruction that accesses a debug register. When such a condition is detected, the BD flag in debug status register DR6 is set prior to generating the exception. This condition is provided to support in-circuit emulators.

  When the emulator needs to access the debug registers, emulator software can set the GD flag to prevent interference from the program currently executing on the processor.

  The processor clears the GD flag upon entering to the debug exception handler, to allow the handler access to the debug registers.
- **R/W0 through R/W3 (read/write) fields (bits 16, 17, 20, 21, 24, 25, 28, and 29) —** Specifies the breakpoint condition for the corresponding breakpoint. The DE (debug extensions) flag in control register CR4 determines how the bits in the R/W*n* fields are interpreted. When the DE flag is set, the processor interprets bits as follows:

  00 — Break on instruction execution only.
  01 — Break on data writes only.
  10 — Break on I/O reads or writes.
  11 — Break on data reads or writes but not instruction fetches.

  When the DE flag is clear, the processor interprets the R/W*n* bits the same as for the Intel386™ and Intel486™ processors, which is as follows:

  00 — Break on instruction execution only.
  01 — Break on data writes only.
  10 — Undefined.
  11 — Break on data reads or writes but not instruction fetches.
- **LEN0 through LEN3 (Length) fields (bits 18, 19, 22, 23, 26, 27, 30, and 31) —** Specify the size of the memory location at the address specified in the corresponding breakpoint address register (DR0 through DR3). These fields are interpreted as follows:

  00 — 1-byte length.
  01 — 2-byte length.
  10 — Undefined (or 8 byte length, see note below).
  11 — 4-byte length.

If the corresponding RW*n* field in register DR7 is 00 (instruction execution), then the LEN*n* field should also be 00. The effect of using other lengths is undefined. See Section 18.2.5, "Breakpoint Field Recognition," below.

NOTES

For Pentium® 4 and Intel® Xeon® processors with a CPUID signature corresponding to family 15 (model 3, 4, and 6), break point conditions permit specifying 8-byte length on data read/write with an of encoding 10B in the LEN*n* field.

Encoding 10B is also supported in processors based on Intel Core microarchitecture or enhanced Intel Core microarchitecture, the respective CPUID signatures corresponding to family 6, model 15, and family 6, DisplayModel value 23 (see CPUID instruction in Chapter 3, "Instruction Set Reference, A-L" in the *Intel® 64 and IA-32 Architectures Software Developer's Manual, Volume 2A*). The Encoding 10B is supported in processors based on Intel Atom® microarchitecture, with CPUID signature of family 6, DisplayModel value 1CH. The encoding 10B is undefined for other processors.

18.2.5 Breakpoint Field Recognition

Breakpoint address registers (debug registers DR0 through DR3) and the LEN*n* fields for each breakpoint define a range of sequential byte addresses for a data or I/O breakpoint. The LEN*n* fields permit specification of a 1-, 2-, 4- or 8-byte range, beginning at the linear address specified in the corresponding debug register (DR*n*). Two-byte ranges must be aligned on word boundaries; 4-byte ranges must be aligned on doubleword boundaries, 8-byte ranges must be aligned on quadword boundaries. I/O addresses are zero-extended (from 16 to 32 bits, for comparison with the breakpoint address in the selected debug register). These requirements are enforced by the processor; it uses LEN*n* field bits to mask the lower address bits in the debug registers. Unaligned data or I/O breakpoint addresses do not yield valid results.

A data breakpoint for reading or writing data is triggered if any of the bytes participating in an access is within the range defined by a breakpoint address register and its LEN*n* field. Table 18-1 provides an example setup of debug registers and data accesses that would subsequently trap or not trap on the breakpoints.

A data breakpoint for an unaligned operand can be constructed using two breakpoints, where each breakpoint is byte-aligned and the two breakpoints together cover the operand. The breakpoints generate exceptions only for the operand, not for neighboring bytes.

Instruction breakpoint addresses must have a length specification of 1 byte (the LEN*n* field is set to 00). Instruction breakpoints for other operand sizes are undefined. The processor recognizes an instruction breakpoint address only when it points to the first byte of an instruction. If the instruction has prefixes, the breakpoint address must point to the first prefix.

Table 18-1. Breakpoint Examples

Debug Register Setup			
Debug Register	**R/W*n***	**Breakpoint Address**	**LEN*n***
DR0 DR1 DR2 DR3	R/W0 = 11 (Read/Write) R/W1 = 01 (Write) R/W2 = 11 (Read/Write) R/W3 = 01 (Write)	A0001H A0002H B0002H C0000H	LEN0 = 00 (1 byte) LEN1 = 00 (1 byte) LEN2 = 01) (2 bytes) LEN3 = 11 (4 bytes)
Data Accesses			
Operation		**Address**	**Access Length (In Bytes)**
Data operations that trap - Read or write - Read or write - Write - Write - Read or write - Read or write - Read or write - Write - Write - Write		 A0001H A0001H A0002H A0002H B0001H B0002H B0002H C0000H C0001H C0003H	 1 2 1 2 4 1 2 4 2 1
Data operations that do not trap - Read or write - Read - Read or write - Read or write - Read - Read or write		 A0000H A0002H A0003H B0000H C0000H C0004H	 1 1 4 2 2 4

18.2.6 Debug Registers and Intel® 64 Processors

For Intel 64 architecture processors, debug registers DR0–DR7 are 64 bits. In 16-bit or 32-bit modes (protected mode and compatibility mode), writes to a debug register fill the upper 32 bits with zeros. Reads from a debug register return the lower 32 bits. In 64-bit mode, MOV DRn instructions read or write all 64 bits. Operand-size prefixes are ignored.

In 64-bit mode, the upper 32 bits of DR6 and DR7 are reserved and must be written with zeros. Writing 1 to any of the upper 32 bits results in a #GP(0) exception (see Figure 18-2). All 64 bits of DR0–DR3 are writable by software. However, MOV DRn instructions do not check that addresses written to DR0–DR3 are in the linear-address limits of the processor implementation (address matching is supported only on valid addresses generated by the processor implementation). Break point conditions for 8-byte memory read/writes are supported in all modes.

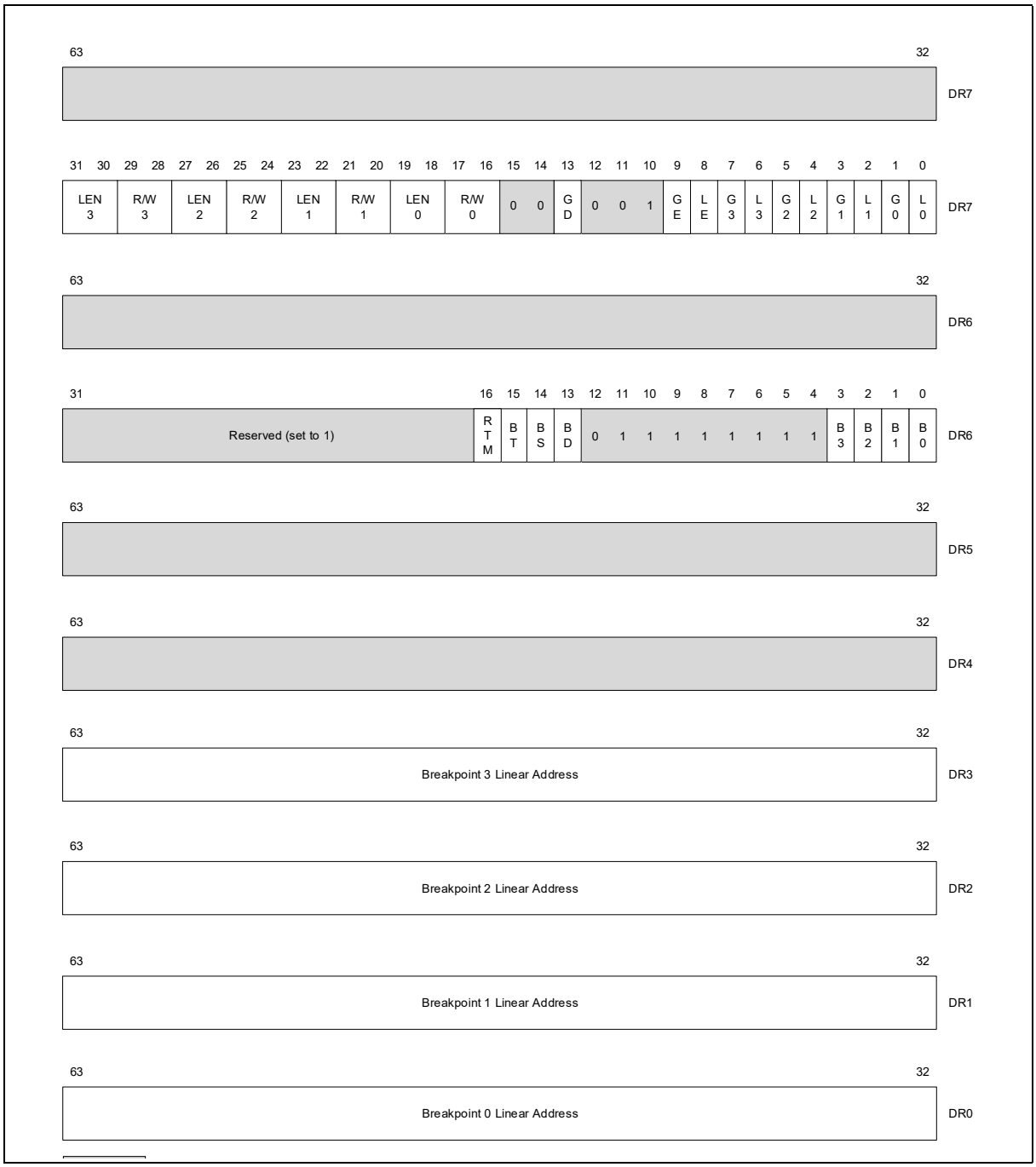

Figure 18-2. DR6/DR7 Layout on Processors Supporting Intel® 64 Architecture

18.3 DEBUG EXCEPTIONS

The Intel 64 and IA-32 architectures dedicate two interrupt vectors to handling debug exceptions: vector 1 (debug exception, #DB) and vector 3 (breakpoint exception, #BP). The following sections describe how these exceptions are generated and typical exception handler operations.

18.3.1 Debug Exception (#DB)—Interrupt Vector 1

The debug-exception handler is usually a debugger program or part of a larger software system. The processor generates a debug exception for any of several conditions. The debugger checks flags in the DR6 and DR7 registers to determine which condition caused the exception and which other conditions might apply. Table 18-2 shows the states of these flags following the generation of each kind of breakpoint condition.

Instruction-breakpoint and general-detect condition (see Section 18.3.1.3, "General-Detect Exception Condition") result in faults; other debug-exception conditions result in traps. The debug exception may report one or both at one time. The following sections describe each class of debug exception.

The INT1 instruction generates a debug exception as a trap. Hardware vendors may use the INT1 instruction for hardware debug. For that reason, Intel recommends software vendors instead use the INT3 instruction for software breakpoints.

See also: Chapter 6, "Interrupt 1—Debug Exception (#DB)," in the *Intel® 64 and IA-32 Architectures Software Developer's Manual, Volume 3A*.

Table 18-2. Debug Exception Conditions

Debug or Breakpoint Condition	DR6 Flags Tested	DR7 Flags Tested	Exception Class
Single-step trap	BS = 1		Trap
Instruction breakpoint, at addresses defined by DR*n* and LEN*n*	B*n* = 1 and (G*n* or L*n* = 1)	R/Wn = 0	Fault
Data write breakpoint, at addresses defined by DR*n* and LEN*n*	B*n* = 1 and (G*n* or L*n* = 1)	R/Wn = 1	Trap
I/O read or write breakpoint, at addresses defined by DR*n* and LEN*n*	B*n* = 1 and (G*n* or L*n* = 1)	R/Wn = 2	Trap
Data read or write (but not instruction fetches), at addresses defined by DR*n* and LEN*n*	B*n* = 1 and (G*n* or L*n* = 1)	R/Wn = 3	Trap
General detect fault, resulting from an attempt to modify debug registers (usually in conjunction with in-circuit emulation)	BD = 1	None	Fault
Task switch	BT = 1	None	Trap
INT1 instruction	None	None	Trap

18.3.1.1 Instruction-Breakpoint Exception Condition

The processor reports an instruction breakpoint when it attempts to execute an instruction at an address specified in a breakpoint-address register (DR0 through DR3) that has been set up to detect instruction execution (R/W flag is set to 0). Upon reporting the instruction breakpoint, the processor generates a fault-class, debug exception (#DB) before it executes the target instruction for the breakpoint.

Instruction breakpoints are the highest priority debug exceptions. They are serviced before any other exceptions detected during the decoding or execution of an instruction. However, if an instruction breakpoint is placed on an instruction located immediately after a POP SS/MOV SS instruction, the breakpoint will be suppressed as if EFLAGS.RF were 1 (see the next paragraph and Section 6.8.3, "Masking Exceptions and Interrupts When Switching Stacks," of the *Intel® 64 and IA-32 Architectures Software Developer's Manual, Volume 3A*).

Because the debug exception for an instruction breakpoint is generated before the instruction is executed, if the instruction breakpoint is not removed by the exception handler; the processor will detect the instruction breakpoint again when the instruction is restarted and generate another debug exception. To prevent looping on an instruction breakpoint, the Intel 64 and IA-32 architectures provide the RF flag (resume flag) in the EFLAGS register (see Section 2.3, "System Flags and Fields in the EFLAGS Register," in the *Intel® 64 and IA-32 Architectures Software Developer's Manual, Volume 3A*). When the RF flag is set, the processor ignores instruction breakpoints.

All Intel 64 and IA-32 processors manage the RF flag as follows. The RF Flag is cleared at the start of the instruction after the check for instruction breakpoints, CS limit violations, and FP exceptions. Task Switches and IRETD/IRETQ instructions transfer the RF image from the TSS/stack to the EFLAGS register.

When calling an event handler, Intel 64 and IA-32 processors establish the value of the RF flag in the EFLAGS image pushed on the stack:

- For any fault-class exception except a debug exception generated in response to an instruction breakpoint, the value pushed for RF is 1.
- For any interrupt arriving after any iteration of a repeated string instruction but the last iteration, the value pushed for RF is 1.
- For any trap-class exception generated by any iteration of a repeated string instruction but the last iteration, the value pushed for RF is 1.
- For other cases, the value pushed for RF is the value that was in EFLAG.RF at the time the event handler was called. This includes:
  - Debug exceptions generated in response to instruction breakpoints
  - Hardware-generated interrupts arriving between instructions (including those arriving after the last iteration of a repeated string instruction)
  - Trap-class exceptions generated after an instruction completes (including those generated after the last iteration of a repeated string instruction)
  - Software-generated interrupts (RF is pushed as 0, since it was cleared at the start of the software interrupt)

As noted above, the processor does not set the RF flag prior to calling the debug exception handler for debug exceptions resulting from instruction breakpoints. The debug exception handler can prevent recurrence of the instruction breakpoint by setting the RF flag in the EFLAGS image on the stack. If the RF flag in the EFLAGS image is set when the processor returns from the exception handler, it is copied into the RF flag in the EFLAGS register by IRETD/IRETQ or a task switch that causes the return. The processor then ignores instruction breakpoints for the duration of the next instruction. (Note that the POPF, POPFD, and IRET instructions do not transfer the RF image into the EFLAGS register.) Setting the RF flag does not prevent other types of debug-exception conditions (such as, I/O or data breakpoints) from being detected, nor does it prevent non-debug exceptions from being generated.

For the Pentium processor, when an instruction breakpoint coincides with another fault-type exception (such as a page fault), the processor may generate one spurious debug exception after the second exception has been handled, even though the debug exception handler set the RF flag in the EFLAGS image. To prevent a spurious exception with Pentium processors, all fault-class exception handlers should set the RF flag in the EFLAGS image.

18.3.1.2 Data Memory and I/O Breakpoint Exception Conditions

Data memory and I/O breakpoints are reported when the processor attempts to access a memory or I/O address specified in a breakpoint-address register (DR0 through DR3) that has been set up to detect data or I/O accesses (R/W flag is set to 1, 2, or 3). The processor generates the exception after it executes the instruction that made the access, so these breakpoint condition causes a trap-class exception to be generated.

Because data breakpoints are traps, an instruction that writes memory overwrites the original data before the debug exception generated by a data breakpoint is generated. If a debugger needs to save the contents of a write breakpoint location, it should save the original contents before setting the breakpoint. The handler can report the saved value after the breakpoint is triggered. The address in the debug registers can be used to locate the new value stored by the instruction that triggered the breakpoint.

If a data breakpoint is detected during an iteration of a string instruction executed with fast-string operation (see Section 7.3.9.3 of *Intel® 64 and IA-32 Architectures Software Developer's Manual, Volume 1*), delivery of the resulting debug exception may be delayed until completion of the corresponding group of iterations.

Intel486 and later processors ignore the GE and LE flags in DR7. In Intel386 processors, exact data breakpoint matching does not occur unless it is enabled by setting the LE and/or the GE flags.

For repeated INS and OUTS instructions that generate an I/O-breakpoint debug exception, the processor generates the exception after the completion of the first iteration. Repeated INS and OUTS instructions generate a data-breakpoint debug exception after the iteration in which the memory address breakpoint location is accessed.

If an execution of the MOV or POP instruction loads the SS register and encounters a data breakpoint, the resulting debug exception is delivered after completion of the next instruction (the one after the MOV or POP).

Any pending data or I/O breakpoints are lost upon delivery of an exception. For example, if a machine-check exception (#MC) occurs following an instruction that encounters a data breakpoint (but before the resulting debug exception is delivered), the data breakpoint is lost. If a MOV or POP instruction that loads the SS register encounters a data breakpoint, the data breakpoint is lost if the next instruction causes a fault.

Delivery of events due to INT *n*, INT3, or INTO does not cause a loss of data breakpoints. If a MOV or POP instruction that loads the SS register encounters a data breakpoint, and the next instruction is software interrupt (INT *n*, INT3, or INTO), a debug exception (#DB) resulting from a data breakpoint will be delivered after the transition to the software-interrupt handler. The #DB handler should account for the fact that the #DB may have been delivered after a invocation of a software-interrupt handler, and in particular that the CPL may have changed between recognition of the data breakpoint and delivery of the #DB.

18.3.1.3 General-Detect Exception Condition

When the GD flag in DR7 is set, the general-detect debug exception occurs when a program attempts to access any of the debug registers (DR0 through DR7) at the same time they are being used by another application, such as an emulator or debugger. This protection feature guarantees full control over the debug registers when required. The debug exception handler can detect this condition by checking the state of the BD flag in the DR6 register. The processor generates the exception before it executes the MOV instruction that accesses a debug register, which causes a fault-class exception to be generated.

18.3.1.4 Single-Step Exception Condition

The processor generates a single-step debug exception if (while an instruction is being executed) it detects that the TF flag in the EFLAGS register is set. The exception is a trap-class exception, because the exception is generated after the instruction is executed. The processor will not generate this exception after the instruction that sets the TF flag. For example, if the POPF instruction is used to set the TF flag, a single-step trap does not occur until after the instruction that follows the POPF instruction.

The processor clears the TF flag before calling the exception handler. If the TF flag was set in a TSS at the time of a task switch, the exception occurs after the first instruction is executed in the new task.

The TF flag normally is not cleared by privilege changes inside a task. The INT *n*, INT3, and INTO instructions, however, do clear this flag. Therefore, software debuggers that single-step code must recognize and emulate INT *n* or INTO instructions rather than executing them directly. To maintain protection, the operating system should check the CPL after any single-step trap to see if single stepping should continue at the current privilege level.

The interrupt priorities guarantee that, if an external interrupt occurs, single stepping stops. When both an external interrupt and a single-step interrupt occur together, the single-step interrupt is processed first. This operation clears the TF flag. After saving the return address or switching tasks, the external interrupt input is examined before the first instruction of the single-step handler executes. If the external interrupt is still pending, then it is serviced. The external interrupt handler does not run in single-step mode. To single step an interrupt handler, single step an INT *n* instruction that calls the interrupt handler.

If an occurrence of the MOV or POP instruction loads the SS register executes with EFLAGS.TF = 1, no single-step debug exception occurs following the MOV or POP instruction.

18.3.1.5 Task-Switch Exception Condition

The processor generates a debug exception after a task switch if the T flag of the new task's TSS is set. This exception is generated after program control has passed to the new task, and prior to the execution of the first instruction of that task. The exception handler can detect this condition by examining the BT flag of the DR6 register.

If entry 1 (#DB) in the IDT is a task gate, the T bit of the corresponding TSS should not be set. Failure to observe this rule will put the processor in a loop.

18.3.2 Breakpoint Exception (#BP)—Interrupt Vector 3

The breakpoint exception (interrupt 3) is caused by execution of an INT3 instruction. See Chapter 6, "Interrupt 3—Breakpoint Exception (#BP)." Debuggers use breakpoint exceptions in the same way that they use the breakpoint registers; that is, as a mechanism for suspending program execution to examine registers and memory locations. With earlier IA-32 processors, breakpoint exceptions are used extensively for setting instruction breakpoints.

With the Intel386 and later IA-32 processors, it is more convenient to set breakpoints with the breakpoint-address registers (DR0 through DR3). However, the breakpoint exception still is useful for breakpointing debuggers, because a breakpoint exception can call a separate exception handler. The breakpoint exception is also useful when it is necessary to set more breakpoints than there are debug registers or when breakpoints are being placed in the source code of a program under development.

18.3.3 Debug Exceptions, Breakpoint Exceptions, and Restricted Transactional Memory (RTM)

Chapter 16, "Programming with Intel® Transactional Synchronization Extensions," of *Intel® 64 and IA-32 Architectures Software Developer's Manual, Volume 1* describes Restricted Transactional Memory (RTM). This is an instruction-set interface that allows software to identify **transactional regions** (or critical sections) using the XBEGIN and XEND instructions.

Execution of an RTM transactional region begins with an XBEGIN instruction. If execution of the region successfully reaches an XEND instruction, the processor ensures that all memory operations performed within the region appear to have occurred instantaneously when viewed from other logical processors. Execution of an RTM transaction region does not succeed if the processor cannot commit the updates atomically. When this happens, the processor rolls back the execution, a process referred to as a **transactional abort**. In this case, the processor discards all updates performed in the region, restores architectural state to appear as if the execution had not occurred, and resumes execution at a fallback instruction address that was specified with the XBEGIN instruction.

If debug exception (#DB) or breakpoint exception (#BP) occurs within an RTM transaction region, a transactional abort occurs, the processor sets EAX[4], and no exception is delivered.

Software can enable **advanced debugging of RTM transactional regions** by setting DR7.RTM[bit 11] and IA32_DEBUGCTL.RTM[bit 15]. If these bits are both set, the transactional abort caused by a #DB or #BP within an RTM transaction region does **not** resume execution at the fallback instruction address specified with the XBEGIN instruction that begin the region. Instead, execution is resumed at that XBEGIN instruction, and a #DB is delivered. (A #DB is delivered even if the transactional abort was caused by a #BP.) Such a #DB will clear DR6.RTM[bit 16] (all other debug exceptions set DR6[16]).

18.4 LAST BRANCH, INTERRUPT, AND EXCEPTION RECORDING OVERVIEW

P6 family processors introduced the ability to set breakpoints on taken branches, interrupts, and exceptions, and to single-step from one branch to the next. This capability has been modified and extended in the Pentium 4, Intel Xeon, Pentium M, Intel® Core™ Solo, Intel® Core™ Duo, Intel® Core™2 Duo, Intel® Core™ i7 and Intel Atom® processors to allow logging of branch trace messages in a branch trace store (BTS) buffer in memory.

See the following sections for processor specific implementation of last branch, interrupt, and exception recording:

- Section 18.5, "Last Branch, Interrupt, and Exception Recording (Intel® Core™ 2 Duo and Intel Atom® Processors)"
- Section 18.6, "Last Branch, Call Stack, Interrupt, and Exception Recording for Processors based on Goldmont Microarchitecture"
- Section 18.9, "Last Branch, Interrupt, and Exception Recording for Processors based on Nehalem Microarchitecture"

— Section 18.10, "Last Branch, Interrupt, and Exception Recording for Processors based on Sandy Bridge Microarchitecture"

— Section 18.11, "Last Branch, Call Stack, Interrupt, and Exception Recording for Processors based on Haswell Microarchitecture"

— Section 18.12, "Last Branch, Call Stack, Interrupt, and Exception Recording for Processors based on Skylake Microarchitecture"

— Section 18.14, "Last Branch, Interrupt, and Exception Recording (Intel® Core™ Solo and Intel® Core™ Duo Processors)"

— Section 18.15, "Last Branch, Interrupt, and Exception Recording (Pentium M Processors)"

— Section 18.16, "Last Branch, Interrupt, and Exception Recording (P6 Family Processors)"

The following subsections of Section 18.4 describe common features of profiling branches. These features are generally enabled using the IA32_DEBUGCTL MSR (older processor may have implemented a subset or model-specific features, see definitions of MSR_DEBUGCTLA, MSR_DEBUGCTLB, MSR_DEBUGCTL).

18.4.1 IA32_DEBUGCTL MSR

The **IA32_DEBUGCTL** MSR provides bit field controls to enable debug trace interrupts, debug trace stores, trace messages enable, single stepping on branches, last branch record recording, and to control freezing of LBR stack or performance counters on a PMI request. IA32_DEBUGCTL MSR is located at register address 01D9H.

See Figure 18-3 for the MSR layout and the bullets below for a description of the flags:

- **LBR (last branch/interrupt/exception) flag (bit 0) —** When set, the processor records a running trace of the most recent branches, interrupts, and/or exceptions taken by the processor (prior to a debug exception being generated) in the last branch record (LBR) stack. For more information, see the Section 18.5.1, "LBR Stack" (Intel® Core™2 Duo and Intel Atom® processor family) and Section 18.9.1, "LBR Stack" (processors based on Nehalem microarchitecture).
- **BTF (single-step on branches) flag (bit 1) —** When set, the processor treats the TF flag in the EFLAGS register as a "single-step on branches" flag rather than a "single-step on instructions" flag. This mechanism allows single-stepping the processor on taken branches. See Section 18.4.3, "Single-Stepping on Branches," for more information about the BTF flag.
- **TR (trace message enable) flag (bit 6) —** When set, branch trace messages are enabled. When the processor detects a taken branch, interrupt, or exception; it sends the branch record out on the system bus as a branch trace message (BTM). See Section 18.4.4, "Branch Trace Messages," for more information about the TR flag.
- **BTS (branch trace store) flag (bit 7) —** When set, the flag enables BTS facilities to log BTMs to a memory-resident BTS buffer that is part of the DS save area. See Section 18.4.9, "BTS and DS Save Area."
- **BTINT (branch trace interrupt) flag (bit 8) —** When set, the BTS facilities generate an interrupt when the BTS buffer is full. When clear, BTMs are logged to the BTS buffer in a circular fashion. See Section 18.4.5, "Branch Trace Store (BTS)," for a description of this mechanism.

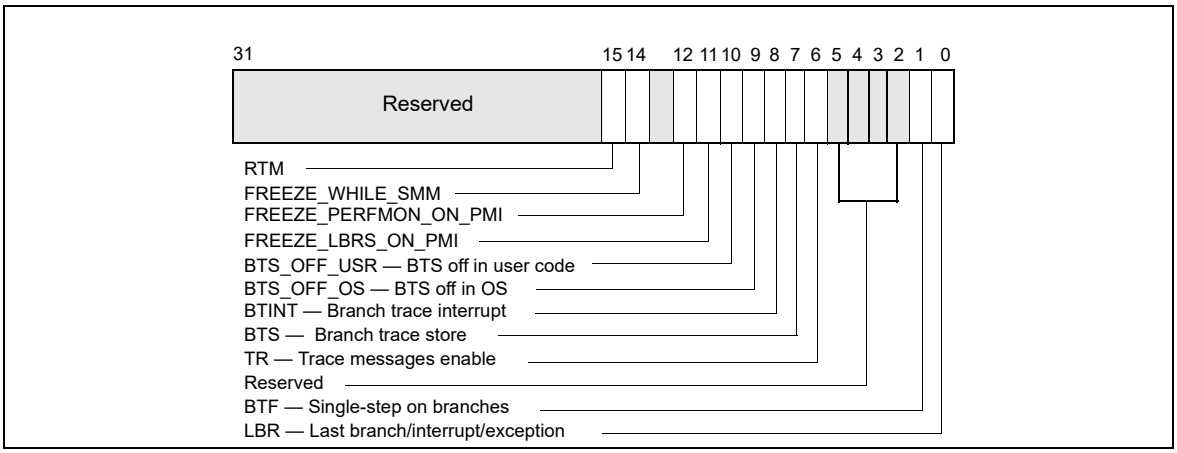

Figure 18-3. IA32_DEBUGCTL MSR for Processors based on Intel Core microarchitecture

- **BTS_OFF_OS (branch trace off in privileged code) flag (bit 9) —** When set, BTS or BTM is skipped if CPL is 0. See Section 18.13.2.
- **BTS_OFF_USR (branch trace off in user code) flag (bit 10) —** When set, BTS or BTM is skipped if CPL is greater than 0. See Section 18.13.2.
- **FREEZE_LBRS_ON_PMI flag (bit 11) —** When set, the LBR stack is frozen on a hardware PMI request (e.g., when a counter overflows and is configured to trigger PMI). See Section 18.4.7 for details.
- **FREEZE_PERFMON_ON_PMI flag (bit 12) —** When set, the performance counters (IA32_PMCx and IA32_FIXED_CTRx) are frozen on a PMI request. See Section 18.4.7 for details.
- **FREEZE_WHILE_SMM (bit 14) —** If this bit is set, upon the delivery of an SMI, the processor will clear all the enable bits of IA32_PERF_GLOBAL_CTRL, save a copy of the content of IA32_DEBUGCTL and disable LBR, BTF, TR, and BTS fields of IA32_DEBUGCTL before transferring control to the SMI handler. If Intel Thread Director support was enabled before transferring control to the SMI handler, then the processor will also reset the Intel Thread Director history (see Section 15.6.11 for more details about Intel Thread Director enable, reset, and history reset operations).

  Subsequently, the enable bits of IA32_PERF_GLOBAL_CTRL will be set to 1, the saved copy of IA32_DEBUGCTL prior to SMI delivery will be restored, after the SMI handler issues RSM to complete its service. If Intel Thread Director support is enabled when RSM is executed, then the processor resets the Intel Thread Director history.

  Note that system software must check if the processor supports the IA32_DEBUGCTL.FREEZE_WHILE_SMM control bit. IA32_DEBUGCTL.FREEZE_WHILE_SMM is supported if IA32_PERF_CAPABILITIES.FREEZE_WHILE_SMM[Bit 12] is reporting 1. See Section 20.8 for details of detecting the presence of IA32_PERF_CAPABILITIES MSR.
- **RTM (bit 15)** — If this bit is set, advanced debugging of RTM transactional regions is enabled if DR7.RTM is also set. See Section 18.3.3.

18.4.2 Monitoring Branches, Exceptions, and Interrupts

When the LBR flag (bit 0) in the IA32_DEBUGCTL MSR is set, the processor automatically begins recording branch records for taken branches, interrupts, and exceptions (except for debug exceptions) in the LBR stack MSRs.

When the processor generates a debug exception (#DB), it automatically clears the LBR flag before executing the exception handler. This action does not clear previously stored LBR stack MSRs.

A debugger can use the linear addresses in the LBR stack to re-set breakpoints in the breakpoint address registers (DR0 through DR3). This allows a backward trace from the manifestation of a particular bug toward its source.

On some processors, if the LBR flag is cleared and TR flag in the IA32_DEBUGCTL MSR remains set, the processor will continue to update LBR stack MSRs. This is because those processors use the entries in the LBR stack in the process of generating BTM/BTS records. A #DB does not automatically clear the TR flag.

18.4.3 Single-Stepping on Branches

When software sets both the BTF flag (bit 1) in the IA32_DEBUGCTL MSR and the TF flag in the EFLAGS register, the processor generates a single-step debug exception only after instructions that cause a branch.[1] This mechanism allows a debugger to single-step on control transfers caused by branches. This "branch single stepping" helps isolate a bug to a particular block of code before instruction single-stepping further narrows the search. The processor clears the BTF flag when it generates a debug exception. The debugger must set the BTF flag before resuming program execution to continue single-stepping on branches.

18.4.4 Branch Trace Messages

Setting the TR flag (bit 6) in the IA32_DEBUGCTL MSR enables branch trace messages (BTMs). Thereafter, when the processor detects a branch, exception, or interrupt, it sends a branch record out on the system bus as a BTM. A debugging device that is monitoring the system bus can read these messages and synchronize operations with taken branch, interrupt, and exception events.

When interrupts or exceptions occur in conjunction with a taken branch, additional BTMs are sent out on the bus, as described in Section 18.4.2, "Monitoring Branches, Exceptions, and Interrupts."

For the P6 processor family, Pentium M processor family, and processors based on Intel Core microarchitecture, TR and LBR bits can not be set at the same time due to hardware limitation. The content of LBR stack is undefined when TR is set.

For processors with Intel NetBurst microarchitecture, Intel Atom processors, and Intel Core and related Intel Xeon processors both starting with the Nehalem microarchitecture, the processor can collect branch records in the LBR stack and at the same time send/store BTMs when both the TR and LBR flags are set in the IA32_DEBUGCTL MSR (or the equivalent MSR_DEBUGCTLA, MSR_DEBUGCTLB).

The following exception applies:

- BTM may not be observable on Intel Atom processor families that do not provide an externally visible system bus (i.e., processors based on the Silvermont microarchitecture or later).

18.4.4.1 Branch Trace Message Visibility

Branch trace message (BTM) visibility is implementation specific and limited to systems with a front side bus (FSB). BTMs may not be visible to newer system link interfaces or a system bus that deviates from a traditional FSB.

18.4.5 Branch Trace Store (BTS)

A trace of taken branches, interrupts, and exceptions is useful for debugging code by providing a method of determining the decision path taken to reach a particular code location. The LBR flag (bit 0) of IA32_DEBUGCTL provides a mechanism for capturing records of taken branches, interrupts, and exceptions and saving them in the last branch record (LBR) stack MSRs, setting the TR flag for sending them out onto the system bus as BTMs. The branch trace store (BTS) mechanism provides the additional capability of saving the branch records in a memory-resident BTS buffer, which is part of the DS save area. The BTS buffer can be configured to be circular so that the most recent branch records are always available or it can be configured to generate an interrupt when the buffer is nearly full so that all the branch records can be saved. The BTINT flag (bit 8) can be used to enable the generation of interrupt when the BTS buffer is full. See Section 18.4.9.2, "Setting Up the DS Save Area." for additional details.

1. Executions of CALL, IRET, and JMP that cause task switches never cause single-step debug exceptions (regardless of the value of the BTF flag). A debugger desiring debug exceptions on switches to a task should set the T flag (debug trap flag) in the TSS of that task. See Section 8.2.1, "Task-State Segment (TSS)."

Setting this flag (BTS) alone can greatly reduce the performance of the processor. CPL-qualified branch trace storing mechanism can help mitigate the performance impact of sending/logging branch trace messages.

18.4.6 CPL-Qualified Branch Trace Mechanism

CPL-qualified branch trace mechanism is available to a subset of Intel 64 and IA-32 processors that support the branch trace storing mechanism. The processor supports the CPL-qualified branch trace mechanism if CPUID.01H:ECX[bit 4] = 1.

The CPL-qualified branch trace mechanism is described in Section 18.4.9.4. System software can selectively specify CPL qualification to not send/store Branch Trace Messages associated with a specified privilege level. Two bit fields, BTS_OFF_USR (bit 10) and BTS_OFF_OS (bit 9), are provided in the debug control register to specify the CPL of BTMs that will not be logged in the BTS buffer or sent on the bus.

18.4.7 Freezing LBR and Performance Counters on PMI

Many issues may generate a performance monitoring interrupt (PMI); a PMI service handler will need to determine cause to handle the situation. Two capabilities that allow a PMI service routine to improve branch tracing and performance monitoring are available for processors supporting architectural performance monitoring version 2 or greater (i.e., CPUID.0AH:EAX[7:0] > 1). These capabilities provides the following interface in IA32_DEBUGCTL to reduce runtime overhead of PMI servicing, profiler-contributed skew effects on analysis or counter metrics:

- **Freezing LBRs on PMI (bit 11)**— Allows the PMI service routine to ensure the content in the LBR stack are associated with the target workload and not polluted by the branch flows of handling the PMI. Depending on the version ID enumerated by CPUID.0AH:EAX.ArchPerfMonVerID[bits 7:0], two flavors are supported:
  - Legacy Freeze_LBR_on_PMI is supported for ArchPerfMonVerID <= 3 and ArchPerfMonVerID >1. If IA32_DEBUGCTL.Freeze_LBR_On_PMI = 1, the LBR is frozen on the overflowed condition of the buffer area, the processor clears the LBR bit (bit 0) in IA32_DEBUGCTL. Software must then re-enable IA32_DEBUGCTL.LBR to resume recording branches. When using this feature, software should be careful about writes to IA32_DEBUGCTL to avoid re-enabling LBRs by accident if they were just disabled.
  - Streamlined Freeze_LBR_on_PMI is supported for ArchPerfMonVerID >= 4. If IA32_DEBUGCTL.Freeze_LBR_On_PMI = 1, the processor behaves as follows:
    - sets IA32_PERF_GLOBAL_STATUS.LBR_Frz =1 to disable recording, but does not change the LBR bit (bit 0) in IA32_DEBUGCTL. The LBRs are frozen on the overflowed condition of the buffer area.
- **Freezing PMCs on PMI** (bit 12) — Allows the PMI service routine to ensure the content in the performance counters are associated with the target workload and not polluted by the PMI and activities within the PMI service routine. Depending on the version ID enumerated by CPUID.0AH:EAX.ArchPerfMonVerID[bits 7:0], two flavors are supported:
  - Legacy Freeze_Perfmon_on_PMI is supported for ArchPerfMonVerID <= 3 and ArchPerfMonVerID >1. If IA32_DEBUGCTL.Freeze_Perfmon_On_PMI = 1, the performance counters are frozen on the counter overflowed condition when the processor clears the IA32_PERF_GLOBAL_CTRL MSR (see Figure 20-3). The PMCs affected include both general-purpose counters and fixed-function counters (see Section 20.6.2.1, “Fixed-function Performance Counters”). Software must re-enable counts by writing 1s to the corresponding enable bits in IA32_PERF_GLOBAL_CTRL before leaving a PMI service routine to continue counter operation.
  - Streamlined Freeze_Perfmon_on_PMI is supported for ArchPerfMonVerID >= 4. The processor behaves as follows:
    - sets IA32_PERF_GLOBAL_STATUS.CTR_Frz =1 to disable counting on a counter overflow condition, but does not change the IA32_PERF_GLOBAL_CTRL MSR.

Freezing LBRs and PMCs on PMIs (both legacy and streamlined operation) occur when one of the following applies:

- A performance counter had an overflow and was programmed to signal a PMI in case of an overflow.
  - For the general-purpose counters; enabling PMI is done by setting bit 20 of the IA32_PERFEVTSELx register.

  — For the fixed-function counters; enabling PMI is done by setting the 3rd bit in the corresponding 4-bit control field of the MSR_PERF_FIXED_CTR_CTRL register (see Figure 20-1) or IA32_FIXED_CTR_CTRL MSR (see Figure 20-2).

- The PEBS buffer is almost full and reaches the interrupt threshold.
- The BTS buffer is almost full and reaches the interrupt threshold.

Table 18-3 compares the interaction of the processor with the PMI handler using the legacy versus streamlined Freeza_Perfmon_On_PMI interface.

Table 18-3. Legacy and Streamlined Operation with Freeze_Perfmon_On_PMI = 1, Counter Overflowed

Legacy Freeze_Perfmon_On_PMI	Streamlined Freeze_Perfmon_On_PMI	Comment
Processor freezes the counters on overflow	Processor freezes the counters on overflow	Unchanged
Processor clears IA32_PERF_GLOBAL_CTRL	Processor set IA32_PERF_GLOBAL_STATUS.CTR_FTZ	
Handler reads IA32_PERF_GLOBAL_STATUS (0x38E) to examine which counter(s) overflowed	**mask** = RDMSR(0x38E)	Similar
Handler services the PMI	Handler services the PMI	Unchanged
Handler writes 1s to IA32_PERF_GLOBAL_OVF_CTL (0x390)	Handler writes **mask** into IA32_PERF_GLOBAL_OVF_RESET (0x390)	
Processor clears IA32_PERF_GLOBAL_STATUS	Processor clears IA32_PERF_GLOBAL_STATUS	Unchanged
Handler re-enables IA32_PERF_GLOBAL_CTRL	None	Reduced software overhead

18.4.8 LBR Stack

The last branch record stack and top-of-stack (TOS) pointer MSRs are supported across Intel 64 and IA-32 processor families. However, the number of MSRs in the LBR stack and the valid range of TOS pointer value can vary between different processor families. Table 18-4 lists the LBR stack size and TOS pointer range for several processor families according to the CPUID signatures of DisplayFamily_DisplayModel encoding (see CPUID instruction in Chapter 3 of *Intel® 64 and IA-32 Architectures Software Developer's Manual, Volume 2A*).

Table 18-4. LBR Stack Size and TOS Pointer Range

DisplayFamily_DisplayModel	Size of LBR Stack	Component of an LBR Entry	Range of TOS Pointer
06_5CH, 06_5FH	32	FROM_IP, TO_IP	0 to 31
06_4EH, 06_5EH, 06_8EH, 06_9EH, 06_55H, 06_66H, 06_7AH, 06_67H, 06_6AH, 06_6CH, 06_7DH, 06_7EH, 06_8CH, 06_8DH, 06_6AH, 06_A5H, 06_A6H, 06_A7H, 06_A8H, 06_86H, 06_8AH, 06_96H, 06_9CH	32	FROM_IP, TO_IP, LBR_INFO[1]	0 to 31
06_3DH, 06_47H, 06_4FH, 06_56H, 06_3CH, 06_45H, 06_46H, 06_3FH, 06_2AH, 06_2DH, 06_3AH, 06_3EH, 06_1AH, 06_1EH, 06_1FH, 06_2EH, 06_25H, 06_2CH, 06_2FH	16	FROM_IP, TO_IP	0 to 15
06_17H, 06_1DH, 06_0FH	4	FROM_IP, TO_IP	0 to 3
06_37H, 06_4AH, 06_4CH, 06_4DH, 06_5AH, 06_5DH, 06_1CH, 06_26H, 06_27H, 06_35H, 06_36H	8	FROM_IP, TO_IP	0 to 7

NOTES:

1. See Section 18.12.

The last branch recording mechanism tracks not only branch instructions (e.g., JMP, Jcc, LOOP, and CALL instructions), but also other operations that cause a change in the instruction pointer (e.g., external interrupts, traps, and faults). The branch recording mechanisms generally employs a set of MSRs, referred to as last branch record (LBR) stack. The size and exact locations of the LBR stack are generally model-specific (see Chapter 2, "Model-Specific Registers (MSRs)" in the *Intel® 64 and IA-32 Architectures Software Developer's Manual, Volume 4* for model-specific MSR addresses).

- **Last Branch Record (LBR) Stack —** The LBR consists of N pairs of MSRs (N is listed in the LBR stack size column of Table 18-4) that store source and destination address of recent branches (see Figure 18-3):
  - MSR_LASTBRANCH_0_FROM_IP (address is model specific) through the next consecutive (N-1) MSR address store source addresses.
  - MSR_LASTBRANCH_0_TO_IP (address is model specific) through the next consecutive (N-1) MSR address store destination addresses.
- **Last Branch Record Top-of-Stack (TOS) Pointer** — The lowest significant M bits of the TOS Pointer MSR (MSR_LASTBRANCH_TOS, address is model specific) contains an M-bit pointer to the MSR in the LBR stack that contains the most recent branch, interrupt, or exception recorded. The valid range of the M-bit POS pointer is given in Table 18-4.

18.4.8.1 LBR Stack and Intel® 64 Processors

LBR MSRs are 64-bits. In 64-bit mode, last branch records store the full address. Outside of 64-bit mode, the upper 32-bits of branch addresses will be stored as 0.

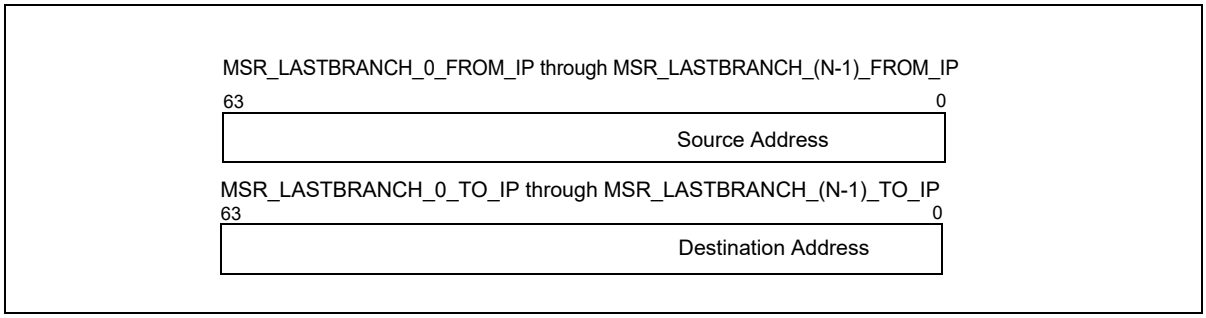

Figure 18-4. 64-bit Address Layout of LBR MSR

Software should query an architectural MSR IA32_PERF_CAPABILITIES[5:0] about the format of the address that is stored in the LBR stack. Four formats are defined by the following encoding:

- **000000B (32-bit record format) —** Stores 32-bit offset in current CS of respective source/destination,
- **000001B (64-bit LIP record format) —** Stores 64-bit linear address of respective source/destination,
- **000010B (64-bit EIP record format) —** Stores 64-bit offset (effective address) of respective source/destination.
- **000011B (64-bit EIP record format) and Flags** — Stores 64-bit offset (effective address) of respective source/destination. Misprediction info is reported in the upper bit of 'FROM' registers in the LBR stack. See LBR stack details below for flag support and definition.
- **000100B (64-bit EIP record format), Flags, and TSX** — Stores 64-bit offset (effective address) of respective source/destination. Misprediction and TSX info are reported in the upper bits of 'FROM' registers in the LBR stack.
- **000101B (64-bit EIP record format), Flags, TSX, and LBR_INFO** — Stores 64-bit offset (effective address) of respective source/destination. Misprediction, TSX, and elapsed cycles since the last LBR update are reported in the LBR_INFO MSR stack.
- **000110B (64-bit LIP record format), Flags, and Cycles** — Stores 64-bit linear address (CS.Base + effective address) of respective source/destination. Misprediction info is reported in the upper bits of

'FROM' registers in the LBR stack. Elapsed cycles since the last LBR update are reported in the upper 16 bits of the 'TO' registers in the LBR stack (see Section 18.6).

— **000111B (64-bit LIP record format), Flags, and LBR_INFO** — Stores 64-bit linear address (CS.Base + effective address) of respective source/destination. Misprediction, and elapsed cycles since the last LBR update are reported in the LBR_INFO MSR stack.

Processor's support for the architectural MSR IA32_PERF_CAPABILITIES is provided by CPUID.01H:ECX[PERF_CAPAB_MSR] (bit 15).

18.4.8.2 LBR Stack and IA-32 Processors

The LBR MSRs in IA-32 processors introduced prior to Intel 64 architecture store the 32-bit "To Linear Address" and "From Linear Address" using the high and low half of each 64-bit MSR.

18.4.8.3 Last Exception Records and Intel 64 Architecture

Intel 64 and IA-32 processors also provide MSRs that store the branch record for the last branch taken prior to an exception or an interrupt. The location of the last exception record (LER) MSRs are model specific. The MSRs that store last exception records are 64-bits. If IA-32e mode is disabled, only the lower 32-bits of the address is recorded. If IA-32e mode is enabled, the processor writes 64-bit values into the MSR. In 64-bit mode, last exception records store 64-bit addresses; in compatibility mode, the upper 32-bits of last exception records are cleared.

18.4.9 BTS and DS Save Area

The **Debug store (DS)** feature flag (bit 21), returned by CPUID.1:EDX[21] indicates that the processor provides the debug store (DS) mechanism. The DS mechanism allows:

- BTMs to be stored in a memory-resident BTS buffer. See Section 18.4.5, "Branch Trace Store (BTS)."
- Processor event-based sampling (PEBS) also uses the DS save area provided by debug store mechanism. The capability of PEBS varies across different microarchitectures. See Section 20.6.2.4, "Processor Event Based Sampling (PEBS)," and the relevant PEBS sub-sections across the core PMU sections in Chapter 20, "Performance Monitoring."

When CPUID.1:EDX[21] is set:

- The BTS_UNAVAILABLE and PEBS_UNAVAILABLE flags in the IA32_MISC_ENABLE MSR indicate (when clear) the availability of the BTS and PEBS facilities, including the ability to set the BTS and BTINT bits in the appropriate DEBUGCTL MSR.
- The IA32_DS_AREA MSR exists and points to the DS save area.

The debug store (DS) save area is a software-designated area of memory that is used to collect the following two types of information:

- **Branch records —** When the BTS flag in the IA32_DEBUGCTL MSR is set, a branch record is stored in the BTS buffer in the DS save area whenever a taken branch, interrupt, or exception is detected.
- **PEBS records —** When a performance counter is configured for PEBS, a PEBS record is stored in the PEBS buffer in the DS save area after the counter overflow occurs. This record contains the architectural state of the processor (state of the 8 general purpose registers, EIP register, and EFLAGS register) at the next occurrence of the PEBS event that caused the counter to overflow. When the state information has been logged, the counter is automatically reset to a specified value, and event counting begins again. The content layout of a PEBS record varies across different implementations that support PEBS. See Section 20.6.2.4.2 for details of enumerating PEBS record format.

NOTES

Prior to processors based on the Goldmont microarchitecture, PEBS facility only supports a subset of implementation-specific precise events. See Section 20.5.3.1 for a PEBS enhancement that can generate records for both precise and non-precise events.

The DS save area and recording mechanism are disabled on INIT, processor Reset or transition to system-management mode (SMM) or IA-32e mode. It is similarly disabled on the generation of a machine-check exception on 45nm and 32nm Intel Atom processors and on processors with Netburst or Intel Core microarchitecture.

The BTS and PEBS facilities may not be available on all processors. The availability of these facilities is indicated by the BTS_UNAVAILABLE and PEBS_UNAVAILABLE flags, respectively, in the IA32_MISC_ENABLE MSR (see Chapter 2, "Model-Specific Registers (MSRs)" in the *Intel® 64 and IA-32 Architectures Software Developer's Manual, Volume 4*).

The DS save area is divided into three parts: buffer management area, branch trace store (BTS) buffer, and PEBS buffer (see Figure 18-5). The buffer management area is used to define the location and size of the BTS and PEBS buffers. The processor then uses the buffer management area to keep track of the branch and/or PEBS records in their respective buffers and to record the performance counter reset value. The linear address of the first byte of the DS buffer management area is specified with the IA32_DS_AREA MSR.

The fields in the buffer management area are as follows:

- **BTS buffer base —** Linear address of the first byte of the BTS buffer. This address should point to a natural doubleword boundary.
- **BTS index —** Linear address of the first byte of the next BTS record to be written to. Initially, this address should be the same as the address in the BTS buffer base field.
- **BTS absolute maximum —** Linear address of the next byte past the end of the BTS buffer. This address should be a multiple of the BTS record size (12 bytes) plus 1.
- **BTS interrupt threshold —** Linear address of the BTS record on which an interrupt is to be generated. This address must point to an offset from the BTS buffer base that is a multiple of the BTS record size. Also, it must be several records short of the BTS absolute maximum address to allow a pending interrupt to be handled prior to processor writing the BTS absolute maximum record.
- **PEBS buffer base —** Linear address of the first byte of the PEBS buffer. This address should point to a natural doubleword boundary.
- **PEBS index —** Linear address of the first byte of the next PEBS record to be written to. Initially, this address should be the same as the address in the PEBS buffer base field.
- **PEBS absolute maximum —** Linear address of the next byte past the end of the PEBS buffer. This address should be a multiple of the PEBS record size (40 bytes) plus 1.
- **PEBS interrupt threshold —** Linear address of the PEBS record on which an interrupt is to be generated. This address must point to an offset from the PEBS buffer base that is a multiple of the PEBS record size. Also, it must be several records short of the PEBS absolute maximum address to allow a pending interrupt to be handled prior to processor writing the PEBS absolute maximum record.
- **PEBS counter reset value —** A 64-bit value that the counter is to be set to when a PEBS record is written. Bits beyond the size of the counter are ignored. This value allows state information to be collected regularly every time the specified number of events occur.

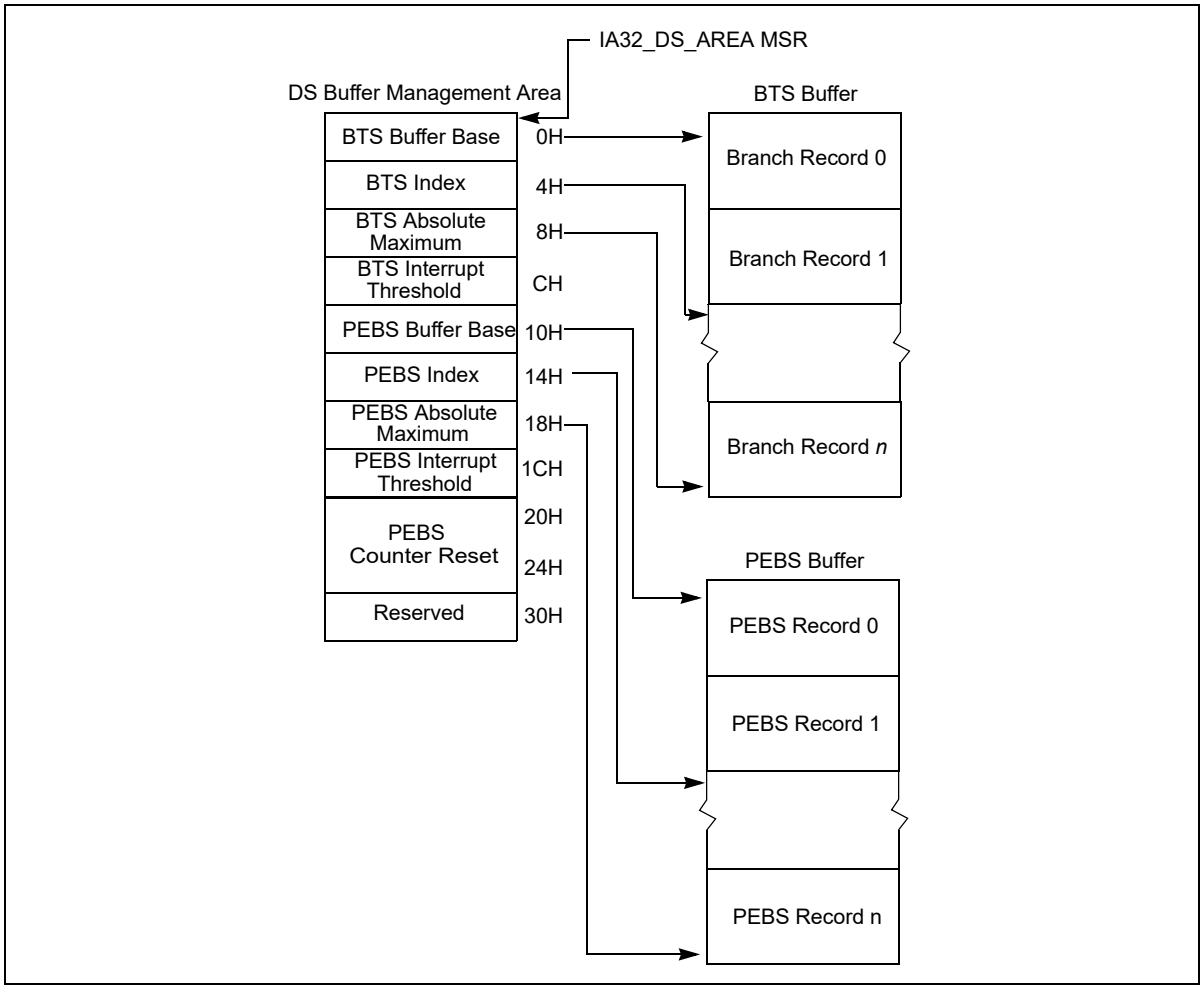

Figure 18-5. DS Save Area Example[1]

NOTES:

1. This example represents the format for a system that supports PEBS on only one counter.

Figure 18-6 shows the structure of a 12-byte branch record in the BTS buffer. The fields in each record are as follows:

- **Last branch from —** Linear address of the instruction from which the branch, interrupt, or exception was taken.
- **Last branch to —** Linear address of the branch target or the first instruction in the interrupt or exception service routine.
- **Branch predicted —** Bit 4 of field indicates whether the branch that was taken was predicted (set) or not predicted (clear).

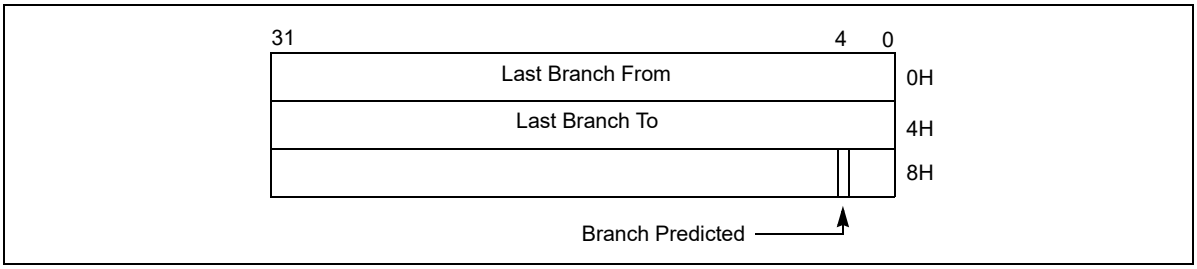

Figure 18-6. 32-bit Branch Trace Record Format

Figure 18-7 shows the structure of the 40-byte PEBS records. Nominally the register values are those at the beginning of the instruction that caused the event. However, there are cases where the registers may be logged in a partially modified state. The linear IP field shows the value in the EIP register translated from an offset into the current code segment to a linear address.

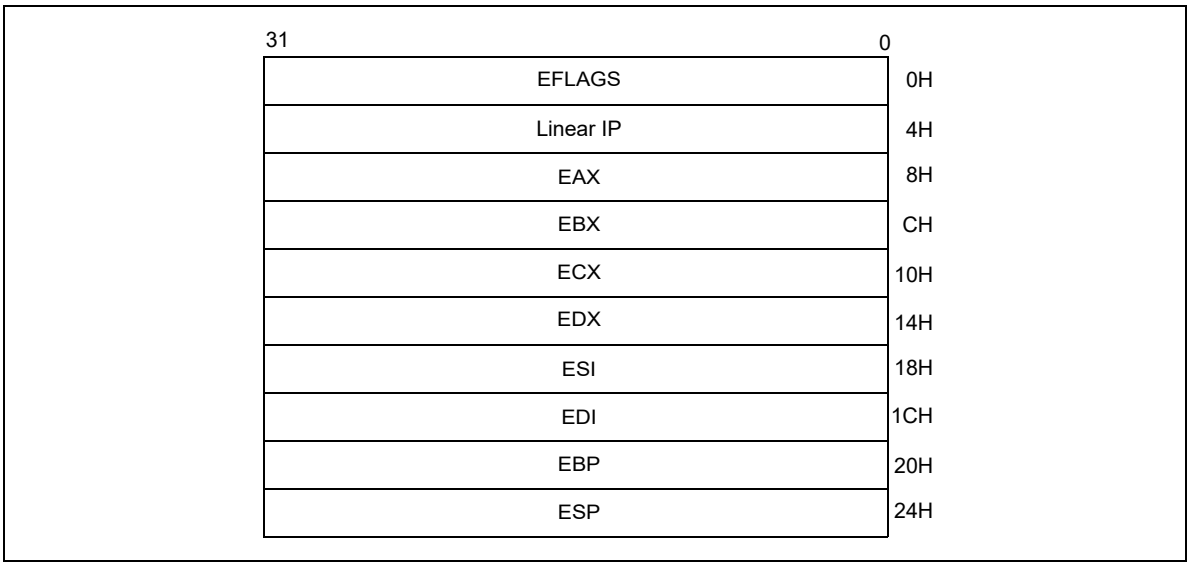

Figure 18-7. PEBS Record Format

18.4.9.1 64 Bit Format of the DS Save Area

When DTES64 = 1 (CPUID.1.ECX[2] = 1), the structure of the DS save area is shown in Figure 18-8.

When DTES64 = 0 (CPUID.1.ECX[2] = 0) and IA-32e mode is active, the structure of the DS save area is shown in Figure 18-8. If IA-32e mode is not active the structure of the DS save area is as shown in Figure 18-5.

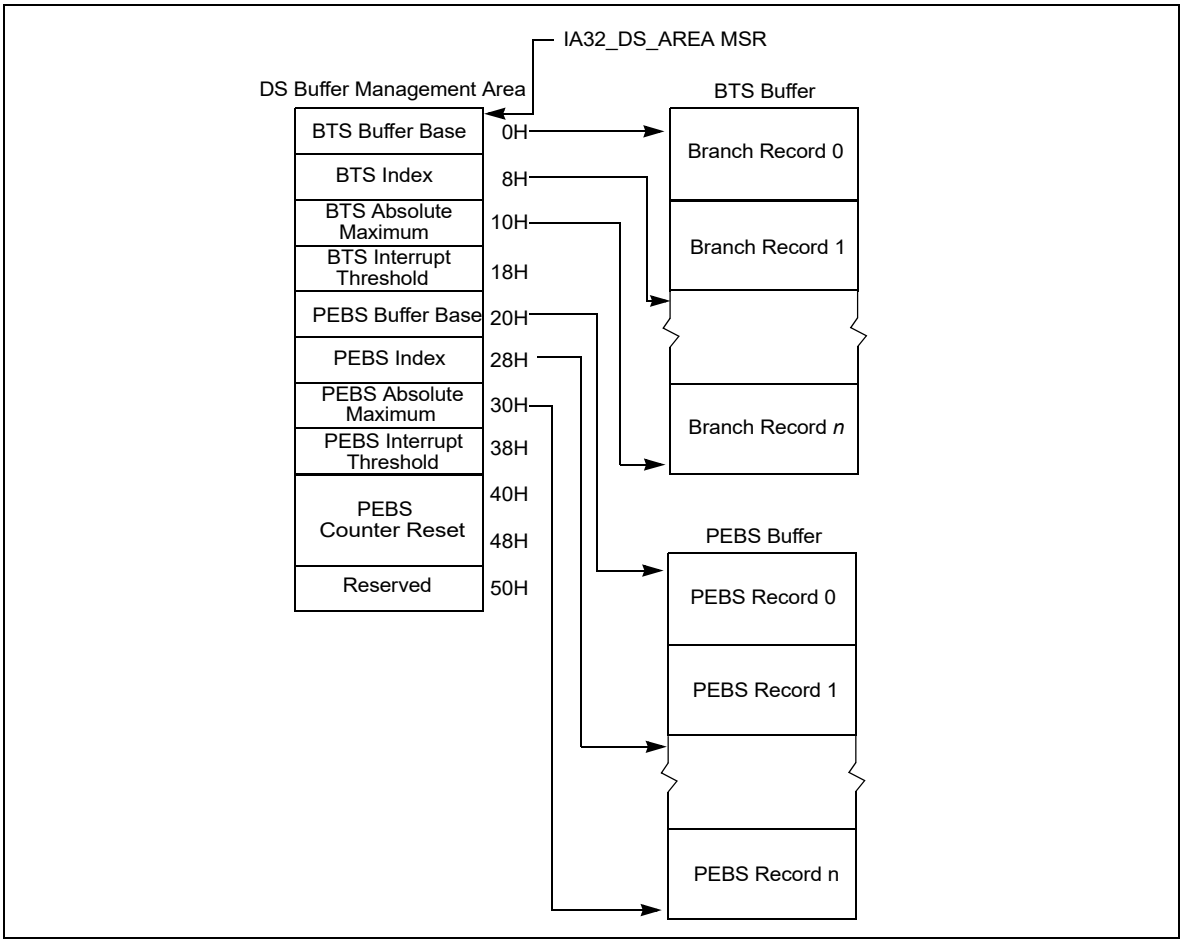

Figure 18-8. IA-32e Mode DS Save Area Example[1]

NOTES:

1. This example represents the format for a system that supports PEBS on only one counter.

The IA32_DS_AREA MSR holds the 64-bit linear address of the first byte of the DS buffer management area. The structure of a branch trace record is similar to that shown in Figure 18-6, but each field is 8 bytes in length. This makes each BTS record 24 bytes (see Figure 18-9). The structure of a PEBS record is similar to that shown in Figure 18-7, but each field is 8 bytes in length and architectural states include register R8 through R15. This makes the size of a PEBS record in 64-bit mode 144 bytes (see Figure 18-10).

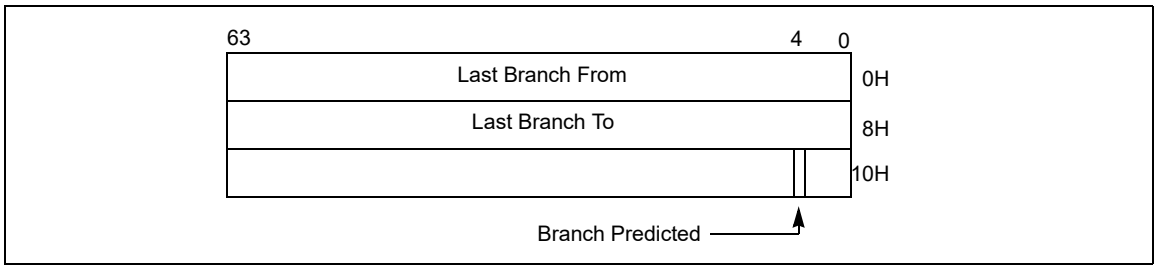

Figure 18-9. 64-bit Branch Trace Record Format

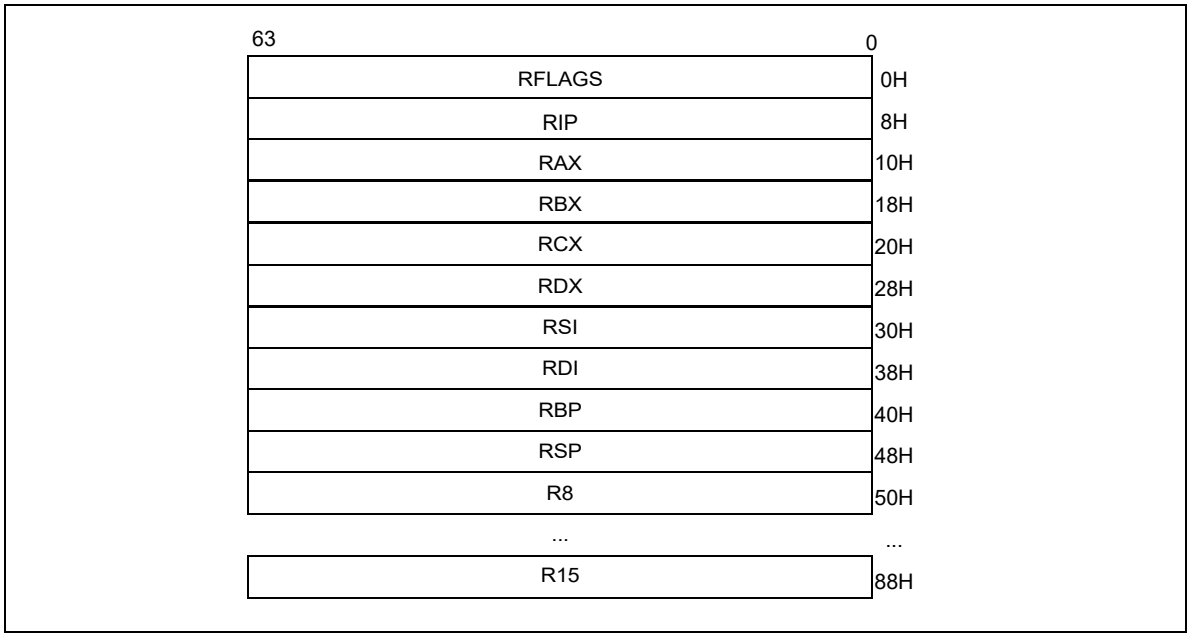

Figure 18-10. 64-bit PEBS Record Format

Fields in the buffer management area of a DS save area are described in Section 18.4.9.

The format of a branch trace record and a PEBS record are the same as the 64-bit record formats shown in Figures 18-9 and Figures 18-10, with the exception that the branch predicted bit is not supported by Intel Core microarchitecture or Intel Atom microarchitecture. The 64-bit record formats for BTS and PEBS apply to DS save area for all operating modes.

The procedures used to program IA32_DEBUGCTL MSR to set up a BTS buffer or a CPL-qualified BTS are described in Section 18.4.9.3 and Section 18.4.9.4.

Required elements for writing a DS interrupt service routine are largely the same on processors that support using DS Save area for BTS or PEBS records. However, on processors based on Intel NetBurst® microarchitecture, re-enabling counting requires writing to CCCRs. But a DS interrupt service routine on processors supporting architectural performance monitoring should:

- Re-enable the enable bits in IA32_PERF_GLOBAL_CTRL MSR if it is servicing an overflow PMI due to PEBS.
- Clear overflow indications by writing to IA32_PERF_GLOBAL_OVF_CTRL when a counting configuration is changed. This includes bit 62 (ClrOvfBuffer) and the overflow indication of counters used in either PEBS or general-purpose counting (specifically: bits 0 or 1; see Figures 20-3).

18.4.9.2 Setting Up the DS Save Area

To save branch records with the BTS buffer, the DS save area must first be set up in memory as described in the following procedure (See Section 20.6.2.4.1, "Setting up the PEBS Buffer," for instructions for setting up a PEBS buffer, respectively, in the DS save area):

1. Create the DS buffer management information area in memory (see Section 18.4.9, "BTS and DS Save Area," and Section 18.4.9.1, "64 Bit Format of the DS Save Area"). Also see the additional notes in this section.
2. Write the base linear address of the DS buffer management area into the IA32_DS_AREA MSR.
3. Set up the performance counter entry in the xAPIC LVT for fixed delivery and edge sensitive. See Section 11.5.1, "Local Vector Table."
4. Establish an interrupt handler in the IDT for the vector associated with the performance counter entry in the xAPIC LVT.

5. Write an interrupt service routine to handle the interrupt. See Section 18.4.9.5, "Writing the DS Interrupt Service Routine."

The following restrictions should be applied to the DS save area.

- The recording of branch records in the BTS buffer (or PEBS records in the PEBS buffer) may not operate properly if accesses to the linear addresses in any of the three DS save area sections cause page faults, VM exits, or the setting of accessed or dirty flags in the paging structures (ordinary or EPT). For that reason, system software should establish paging structures (both ordinary and EPT) to prevent such occurrences. Implications of this may be that an operating system should allocate this memory from a non-paged pool and that system software cannot do "lazy" page-table entry propagation for these pages. Some newer processor generations support "lazy" EPT page-table entry propagation for PEBS; see Section 20.3.9.1 and Section 20.9.5 for more information. A virtual-machine monitor may choose to allow use of PEBS by guest software only if EPT maps all guest-physical memory as present and read/write.
- The DS save area can be larger than a page, but the pages must be mapped to contiguous linear addresses. The buffer may share a page, so it need not be aligned on a 4-KByte boundary. For performance reasons, the base of the buffer must be aligned on a doubleword boundary and should be aligned on a cache line boundary.
- It is recommended that the buffer size for the BTS buffer and the PEBS buffer be an integer multiple of the corresponding record sizes.
- The precise event records buffer should be large enough to hold the number of precise event records that can occur while waiting for the interrupt to be serviced.
- The DS save area should be in kernel space. It must not be on the same page as code, to avoid triggering self-modifying code actions.
- There are no memory type restrictions on the buffers, although it is recommended that the buffers be designated as WB memory type for performance considerations.
- Either the system must be prevented from entering A20M mode while DS save area is active, or bit 20 of all addresses within buffer bounds must be 0.
- Pages that contain buffers must be mapped to the same physical addresses for all processes, such that any change to control register CR3 will not change the DS addresses.
- The DS save area is expected to used only on systems with an enabled APIC. The LVT Performance Counter entry in the APCI must be initialized to use an interrupt gate instead of the trap gate.

18.4.9.3 Setting Up the BTS Buffer

Three flags in the MSR_DEBUGCTLA MSR (see Table 18-5), IA32_DEBUGCTL (see Figure 18-3), or MSR_DEBUGCTLB (see Figure 18-16) control the generation of branch records and storing of them in the BTS buffer; these are TR, BTS, and BTINT. The TR flag enables the generation of BTMs. The BTS flag determines whether the BTMs are sent out on the system bus (clear) or stored in the BTS buffer (set). BTMs cannot be simultaneously sent to the system bus and logged in the BTS buffer. The BTINT flag enables the generation of an interrupt when the BTS buffer is full. When this flag is clear, the BTS buffer is a circular buffer.

Table 18-5. IA32_DEBUGCTL Flag Encodings

TR	BTS	BTINT	Description
0	X	X	Branch trace messages (BTMs) off
1	0	X	Generate BTMs
1	1	0	Store BTMs in the BTS buffer, used here as a circular buffer
1	1	1	Store BTMs in the BTS buffer, and generate an interrupt when the buffer is nearly full

The following procedure describes how to set up a DS Save area to collect branch records in the BTS buffer:

1. Place values in the BTS buffer base, BTS index, BTS absolute maximum, and BTS interrupt threshold fields of the DS buffer management area to set up the BTS buffer in memory.
2. Set the TR and BTS flags in the IA32_DEBUGCTL for Intel Core Solo and Intel Core Duo processors or later processors (or MSR_DEBUGCTLA MSR for processors based on Intel NetBurst Microarchitecture; or MSR_DEBUGCTLB for Pentium M processors).

3. Clear the BTINT flag in the corresponding IA32_DEBUGCTL (or MSR_DEBUGCTLA MSR; or MSR_DEBUGCTLB) if a circular BTS buffer is desired.

NOTES

If the buffer size is set to less than the minimum allowable value (i.e., BTS absolute maximum < 1 + size of BTS record), the results of BTS is undefined.

In order to prevent generating an interrupt, when working with circular BTS buffer, SW need to set BTS interrupt threshold to a value greater than BTS absolute maximum (fields of the DS buffer management area). It's not enough to clear the BTINT flag itself only.

18.4.9.4 Setting Up CPL-Qualified BTS

If the processor supports CPL-qualified last branch recording mechanism, the generation of branch records and storing of them in the BTS buffer are determined by: TR, BTS, BTS_OFF_OS, BTS_OFF_USR, and BTINT. The encoding of these five bits are shown in Table 18-6.

Table 18-6. CPL-Qualified Branch Trace Store Encodings

TR	BTS	BTS_OFF_OS	BTS_OFF_USR	BTINT	Description
0	X	X	X	X	Branch trace messages (BTMs) off
1	0	X	X	X	Generates BTMs but do not store BTMs
1	1	0	0	0	Store all BTMs in the BTS buffer, used here as a circular buffer
1	1	1	0	0	Store BTMs with CPL > 0 in the BTS buffer
1	1	0	1	0	Store BTMs with CPL = 0 in the BTS buffer
1	1	1	1	X	Generate BTMs but do not store BTMs
1	1	0	0	1	Store all BTMs in the BTS buffer; generate an interrupt when the buffer is nearly full
1	1	1	0	1	Store BTMs with CPL > 0 in the BTS buffer; generate an interrupt when the buffer is nearly full
1	1	0	1	1	Store BTMs with CPL = 0 in the BTS buffer; generate an interrupt when the buffer is nearly full

18.4.9.5 Writing the DS Interrupt Service Routine

The BTS, non-precise event-based sampling, and PEBS facilities share the same interrupt vector and interrupt service routine (called the debug store interrupt service routine or DS ISR). To handle BTS, non-precise event-based sampling, and PEBS interrupts: separate handler routines must be included in the DS ISR. Use the following guidelines when writing a DS ISR to handle BTS, non-precise event-based sampling, and/or PEBS interrupts.

- The DS interrupt service routine (ISR) must be part of a kernel driver and operate at a current privilege level of 0 to secure the buffer storage area.
- Because the BTS, non-precise event-based sampling, and PEBS facilities share the same interrupt vector, the DS ISR must check for all the possible causes of interrupts from these facilities and pass control on to the appropriate handler.

  BTS and PEBS buffer overflow would be the sources of the interrupt if the buffer index matches/exceeds the interrupt threshold specified. Detection of non-precise event-based sampling as the source of the interrupt is accomplished by checking for counter overflow.
- There must be separate save areas, buffers, and state for each processor in an MP system.
- Upon entering the ISR, branch trace messages and PEBS should be disabled to prevent race conditions during access to the DS save area. This is done by clearing TR flag in the IA32_DEBUGCTL (or MSR_DEBUGCTLA MSR) and by clearing the precise event enable flag in the MSR_PEBS_ENABLE MSR. These settings should be restored to their original values when exiting the ISR.

- The processor will not disable the DS save area when the buffer is full and the circular mode has not been selected. The current DS setting must be retained and restored by the ISR on exit.
- After reading the data in the appropriate buffer, up to but not including the current index into the buffer, the ISR must reset the buffer index to the beginning of the buffer. Otherwise, everything up to the index will look like new entries upon the next invocation of the ISR.
- The ISR must clear the mask bit in the performance counter LVT entry.
- The ISR must re-enable the counters to count via IA32_PERF_GLOBAL_CTRL/IA32_PERF_GLOBAL_OVF_CTRL if it is servicing an overflow PMI due to PEBS (or via CCCR's ENABLE bit on processor based on Intel NetBurst microarchitecture).
- The Pentium 4 Processor and Intel Xeon Processor mask PMIs upon receiving an interrupt. Clear this condition before leaving the interrupt handler.

18.5 LAST BRANCH, INTERRUPT, AND EXCEPTION RECORDING (INTEL® CORE™ 2 DUO AND INTEL ATOM® PROCESSORS)

The Intel Core 2 Duo processor family and Intel Xeon processors based on Intel Core microarchitecture or enhanced Intel Core microarchitecture provide last branch interrupt and exception recording. The facilities described in this section also apply to 45 nm and 32 nm Intel Atom processors. These capabilities are similar to those found in Pentium 4 processors, including support for the following facilities:

- **Debug Trace and Branch Recording Control —** The IA32_DEBUGCTL MSR provide bit fields for software to configure mechanisms related to debug trace, branch recording, branch trace store, and performance counter operations. See Section 18.4.1 for a description of the flags. See Figure 18-3 for the MSR layout.
- **Last branch record (LBR) stack —** There are a collection of MSR pairs that store the source and destination addresses related to recently executed branches. See Section 18.5.1.
- **Monitoring and single-stepping of branches, exceptions, and interrupts**
  - See Section 18.4.2 and Section 18.4.3. In addition, the ability to freeze the LBR stack on a PMI request is available.
  - 45 nm and 32 nm Intel Atom processors clear the TR flag when the FREEZE_LBRS_ON_PMI flag is set.
- **Branch trace messages —** See Section 18.4.4.
- **Last exception records —** See Section 18.13.3.
- **Branch trace store and CPL-qualified BTS —** See Section 18.4.5.
- **FREEZE_LBRS_ON_PMI flag (bit 11) —** see Section 18.4.7 for legacy Freeze_LBRs_On_PMI operation.
- **FREEZE_PERFMON_ON_PMI flag (bit 12) —** see Section 18.4.7 for legacy Freeze_Perfmon_On_PMI operation.
- **FREEZE_WHILE_SMM (bit 14) —** FREEZE_WHILE_SMM is supported if IA32_PERF_CAPABILITIES.FREEZE_WHILE_SMM[Bit 12] is reporting 1. See Section 18.4.1.

18.5.1 LBR Stack

The last branch record stack and top-of-stack (TOS) pointer MSRs are supported across Intel Core 2, Intel Atom processor families, and Intel processors based on Intel NetBurst microarchitecture.

Four pairs of MSRs are supported in the LBR stack for Intel Core 2 processors families and Intel processors based on Intel NetBurst microarchitecture:

- **Last Branch Record (LBR) Stack**
  - MSR_LASTBRANCH_0_FROM_IP (address 40H) through MSR_LASTBRANCH_3_FROM_IP (address 43H) store source addresses
  - MSR_LASTBRANCH_0_TO_IP (address 60H) through MSR_LASTBRANCH_3_TO_IP (address 63H) store destination addresses

- **Last Branch Record Top-of-Stack (TOS) Pointer** — The lowest significant 2 bits of the TOS Pointer MSR (MSR_LASTBRANCH_TOS, address 1C9H) contains a pointer to the MSR in the LBR stack that contains the most recent branch, interrupt, or exception recorded.

Eight pairs of MSRs are supported in the LBR stack for 45 nm and 32 nm Intel Atom processors:

- **Last Branch Record (LBR) Stack**
  - MSR_LASTBRANCH_0_FROM_IP (address 40H) through MSR_LASTBRANCH_7_FROM_IP (address 47H) store source addresses
  - MSR_LASTBRANCH_0_TO_IP (address 60H) through MSR_LASTBRANCH_7_TO_IP (address 67H) store destination addresses
- **Last Branch Record Top-of-Stack (TOS) Pointer** — The lowest significant 3 bits of the TOS Pointer MSR (MSR_LASTBRANCH_TOS, address 1C9H) contains a pointer to the MSR in the LBR stack that contains the most recent branch, interrupt, or exception recorded.

The address format written in the FROM_IP/TO_IP MSRS may differ between processors. Software should query IA32_PERF_CAPABILITIES[5:0] and consult Section 18.4.8.1. The behavior of the MSR_LER_TO_LIP and the MSR_LER_FROM_LIP MSRs corresponds to that of the LastExceptionToIP and LastExceptionFromIP MSRs found in P6 family processors.

18.5.2 LBR Stack in Intel Atom® Processors based on the Silvermont Microarchitecture

The last branch record stack and top-of-stack (TOS) pointer MSRs are supported in Intel Atom processors based on the Silvermont and Airmont microarchitectures. Eight pairs of MSRs are supported in the LBR stack.

LBR filtering is supported. Filtering of LBRs based on a combination of CPL and branch type conditions is supported. When LBR filtering is enabled, the LBR stack only captures the subset of branches that are specified by MSR_LBR_SELECT. The layout of MSR_LBR_SELECT is described in Table 18-11.

18.6 LAST BRANCH, CALL STACK, INTERRUPT, AND EXCEPTION RECORDING FOR PROCESSORS BASED ON GOLDMONT MICROARCHITECTURE

Processors based on the Goldmont microarchitecture extend the capabilities described in Section 18.5.2 with the following enhancements:

- Supports new LBR format encoding 00110b in IA32_PERF_CAPABILITIES[5:0].
- Size of LBR stack increased to 32. Each entry includes MSR_LASTBRANCH_x_FROM_IP (address 0x680..0x69f) and MSR_LASTBRANCH_x_TO_IP (address 0x6c0..0x6df).
- LBR call stack filtering supported. The layout of MSR_LBR_SELECT is described in Table 18-13.
- Elapsed cycle information is added to MSR_LASTBRANCH_x_TO_IP. Format is shown in Table 18-7.
- Misprediction info is reported in the upper bits of MSR_LASTBRANCH_x_FROM_IP. MISPRED bit format is shown in Table 18-8.
- Streamlined Freeze_LBRs_On_PMI operation; see Section 18.12.2.
- LBR MSRs may be cleared when MWAIT is used to request a C-state that is numerically higher than C1; see Section 18.12.3.

Table 18-7. MSR_LASTBRANCH_x_TO_IP for the Goldmont Microarchitecture

Bit Field	Bit Offset	Access	Description
Data	47:0	R/W	This is the "branch to" address. See Section 18.4.8.1 for address format.
Cycle Count (Saturating)	63:48	R/W	Elapsed core clocks since last update to the LBR stack.

18.7 LAST BRANCH, CALL STACK, INTERRUPT, AND EXCEPTION RECORDING FOR PROCESSORS BASED ON GOLDMONT PLUS MICROARCHITECTURE

Next generation Intel Atom processors are based on the Goldmont Plus microarchitecture. Processors based on the Goldmont Plus microarchitecture extend the capabilities described in Section 18.6 with the following changes:

- Enumeration of new LBR format: encoding 00111b in IA32_PERF_CAPABILITIES[5:0] is supported, see Section 18.4.8.1.
- Each LBR stack entry consists of three MSRs:
  - MSR_LASTBRANCH_x_FROM_IP, the layout is simplified, see Table 18-9.
  - MSR_LASTBRANCH_x_TO_IP, the layout is the same as Table 18-9.
  - MSR_LBR_INFO_x, stores branch prediction flag, TSX info, and elapsed cycle data. Layout is the same as Table 18-16.

18.8 LAST BRANCH, INTERRUPT, AND EXCEPTION RECORDING FOR INTEL® XEON PHI™ PROCESSOR 7200/5200/3200

The last branch record stack and top-of-stack (TOS) pointer MSRs are supported in the Intel® Xeon Phi™ processor 7200/5200/3200 series based on the Knights Landing microarchitecture. Eight pairs of MSRs are supported in the LBR stack, per thread:

- **Last Branch Record (LBR) Stack**
  - MSR_LASTBRANCH_0_FROM_IP (address 680H) through MSR_LASTBRANCH_7_FROM_IP (address 687H) store source addresses.
  - MSR_LASTBRANCH_0_TO_IP (address 6C0H) through MSR_LASTBRANCH_7_TO_IP (address 6C7H) store destination addresses.
- **Last Branch Record Top-of-Stack (TOS) Pointer —** The lowest significant 3 bits of the TOS Pointer MSR (MSR_LASTBRANCH_TOS, address 1C9H) contains a pointer to the MSR in the LBR stack that contains the most recent branch, interrupt, or exception recorded.

LBR filtering is supported. Filtering of LBRs based on a combination of CPL and branch type conditions is supported. When LBR filtering is enabled, the LBR stack only captures the subset of branches that are specified by MSR_LBR_SELECT. The layout of MSR_LBR_SELECT is described in Table 18-11.

The address format written in the FROM_IP/TO_IP MSRS may differ between processors. Software should query IA32_PERF_CAPABILITIES[5:0] and consult Section 18.4.8.1.The behavior of the MSR_LER_TO_LIP and the MSR_LER_FROM_LIP MSRs corresponds to that of the LastExceptionToIP and LastExceptionFromIP MSRs found in the P6 family processors.

18.9 LAST BRANCH, INTERRUPT, AND EXCEPTION RECORDING FOR PROCESSORS BASED ON NEHALEM MICROARCHITECTURE

The processors based on Nehalem microarchitecture and Westmere microarchitecture support last branch interrupt and exception recording. These capabilities are similar to those found in Intel Core 2 processors and add additional capabilities:

- **Debug Trace and Branch Recording Control —** The IA32_DEBUGCTL MSR provides bit fields for software to configure mechanisms related to debug trace, branch recording, branch trace store, and performance counter operations. See Section 18.4.1 for a description of the flags. See Figure 18-11 for the MSR layout.
- **Last branch record (LBR) stack —** There are 16 MSR pairs that store the source and destination addresses related to recently executed branches. See Section 18.9.1.
- **Monitoring and single-stepping of branches, exceptions, and interrupts —** See Section 18.4.2 and Section 18.4.3. In addition, the ability to freeze the LBR stack on a PMI request is available.

- **Branch trace messages —** The IA32_DEBUGCTL MSR provides bit fields for software to enable each logical processor to generate branch trace messages. See Section 18.4.4. However, not all BTM messages are observable using the Intel® QPI link.
- **Last exception records —** See Section 18.13.3.
- **Branch trace store and CPL-qualified BTS —** See Section 18.4.6 and Section 18.4.5.
- **FREEZE_LBRS_ON_PMI flag (bit 11) —** see Section 18.4.7 for legacy Freeze_LBRs_On_PMI operation.
- **FREEZE_PERFMON_ON_PMI flag (bit 12) —** see Section 18.4.7 for legacy Freeze_Perfmon_On_PMI operation.
- **UNCORE_PMI_EN (bit 13) —** When set. this logical processor is enabled to receive an counter overflow interrupt form the uncore.
- **FREEZE_WHILE_SMM (bit 14) —** FREEZE_WHILE_SMM is supported if IA32_PERF_CAPABILITIES.FREEZE_WHILE_SMM[Bit 12] is reporting 1. See Section 18.4.1.

Processors based on Nehalem microarchitecture provide additional capabilities:

- **Independent control of uncore PMI —** The IA32_DEBUGCTL MSR provides a bit field (see Figure 18-11) for software to enable each logical processor to receive an uncore counter overflow interrupt.
- **LBR filtering —** Processors based on Nehalem microarchitecture support filtering of LBR based on combination of CPL and branch type conditions. When LBR filtering is enabled, the LBR stack only captures the subset of branches that are specified by MSR_LBR_SELECT.

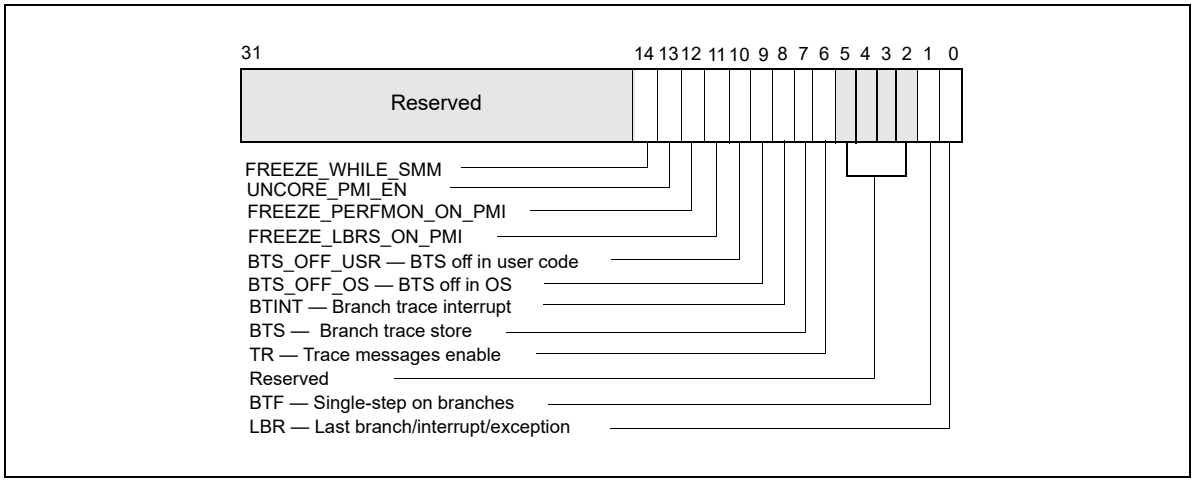

Figure 18-11. IA32_DEBUGCTL MSR for Processors Based on Nehalem Microarchitecture

18.9.1 LBR Stack

Processors based on Nehalem microarchitecture provide 16 pairs of MSR to record last branch record information. The layout of each MSR pair is shown in Table 18-8 and Table 18-9.

Table 18-8. MSR_LASTBRANCH_x_FROM_IP

Bit Field	Bit Offset	Access	Description
Data	47:0	R/W	This is the "branch from" address. See Section 18.4.8.1 for address format.
SIGN_EXt	62:48	R/W	Signed extension of bit 47 of this register.
MISPRED	63	R/W	When set, indicates either the target of the branch was mispredicted and/or the direction (taken/non-taken) was mispredicted; otherwise, the target branch was predicted.

Table 18-9. MSR_LASTBRANCH_x_TO_IP

Bit Field	Bit Offset	Access	Description
Data	47:0	R/W	This is the "branch to" address. See Section 18.4.8.1 for address format
SIGN_EXt	63:48	R/W	Signed extension of bit 47 of this register.

Processors based on Nehalem microarchitecture have an LBR MSR Stack as shown in Table 18-10.

Table 18-10. LBR Stack Size and TOS Pointer Range

DisplayFamily_DisplayModel	Size of LBR Stack	Range of TOS Pointer
06_1AH	16	0 to 15

18.9.2 Filtering of Last Branch Records

MSR_LBR_SELECT is cleared to zero at RESET, and LBR filtering is disabled, i.e., all branches will be captured. MSR_LBR_SELECT provides bit fields to specify the conditions of subsets of branches that will not be captured in the LBR. The layout of MSR_LBR_SELECT is shown in Table 18-11.

Table 18-11. MSR_LBR_SELECT for Nehalem Microarchitecture

Bit Field	Bit Offset	Access	Description
CPL_EQ_0	0	R/W	When set, do not capture branches ending in ring 0
CPL_NEQ_0	1	R/W	When set, do not capture branches ending in ring >0
JCC	2	R/W	When set, do not capture conditional branches
NEAR_REL_CALL	3	R/W	When set, do not capture near relative calls
NEAR_IND_CALL	4	R/W	When set, do not capture near indirect calls
NEAR_RET	5	R/W	When set, do not capture near returns
NEAR_IND_JMP	6	R/W	When set, do not capture near indirect jumps
NEAR_REL_JMP	7	R/W	When set, do not capture near relative jumps
FAR_BRANCH	8	R/W	When set, do not capture far branches
Reserved	63:9		Must be zero

18.10 LAST BRANCH, INTERRUPT, AND EXCEPTION RECORDING FOR PROCESSORS BASED ON SANDY BRIDGE MICROARCHITECTURE

Generally, all of the last branch record, interrupt, and exception recording facility described in Section 18.9, "Last Branch, Interrupt, and Exception Recording for Processors based on Nehalem Microarchitecture", apply to processors based on Sandy Bridge microarchitecture. For processors based on Ivy Bridge microarchitecture, the same holds true.

One difference of note is that MSR_LBR_SELECT is shared between two logical processors in the same core. In Sandy Bridge microarchitecture, each logical processor has its own MSR_LBR_SELECT. The filtering semantics for "Near_ind_jmp" and "Near_rel_jmp" has been enhanced, see Table 18-12.

Table 18-12. MSR_LBR_SELECT for Sandy Bridge Microarchitecture

Bit Field	Bit Offset	Access	Description
CPL_EQ_0	0	R/W	When set, do not capture branches ending in ring 0
CPL_NEQ_0	1	R/W	When set, do not capture branches ending in ring >0
JCC	2	R/W	When set, do not capture conditional branches
NEAR_REL_CALL	3	R/W	When set, do not capture near relative calls
NEAR_IND_CALL	4	R/W	When set, do not capture near indirect calls
NEAR_RET	5	R/W	When set, do not capture near returns
NEAR_IND_JMP	6	R/W	When set, do not capture near indirect jumps except near indirect calls and near returns
NEAR_REL_JMP	7	R/W	When set, do not capture near relative jumps except near relative calls.
FAR_BRANCH	8	R/W	When set, do not capture far branches
Reserved	63:9		Must be zero

18.11 LAST BRANCH, CALL STACK, INTERRUPT, AND EXCEPTION RECORDING FOR PROCESSORS BASED ON HASWELL MICROARCHITECTURE

Generally, all of the last branch record, interrupt, and exception recording facility described in Section 18.10, "Last Branch, Interrupt, and Exception Recording for Processors based on Sandy Bridge Microarchitecture", apply to next generation processors based on Haswell microarchitecture.

The LBR facility also supports an alternate capability to profile call stack profiles. Configuring the LBR facility to conduct call stack profiling is by writing 1 to the MSR_LBR_SELECT.EN_CALLSTACK[bit 9]; see Table 18-13. If MSR_LBR_SELECT.EN_CALLSTACK is clear, the LBR facility will capture branches normally as described in Section 18.10.

Table 18-13. MSR_LBR_SELECT for Haswell Microarchitecture

Bit Field	Bit Offset	Access	Description
CPL_EQ_0	0	R/W	When set, do not capture branches ending in ring 0
CPL_NEQ_0	1	R/W	When set, do not capture branches ending in ring >0
JCC	2	R/W	When set, do not capture conditional branches
NEAR_REL_CALL	3	R/W	When set, do not capture near relative calls
NEAR_IND_CALL	4	R/W	When set, do not capture near indirect calls
NEAR_RET	5	R/W	When set, do not capture near returns
NEAR_IND_JMP	6	R/W	When set, do not capture near indirect jumps except near indirect calls and near returns
NEAR_REL_JMP	7	R/W	When set, do not capture near relative jumps except near relative calls.
FAR_BRANCH	8	R/W	When set, do not capture far branches
EN_CALLSTACK[1]	9		Enable LBR stack to use LIFO filtering to capture Call stack profile
Reserved	63:10		Must be zero

NOTES:

1. Must set valid combination of bits 0-8 in conjunction with bit 9 (as described below), otherwise the contents of the LBR MSRs are undefined.

The call stack profiling capability is an enhancement of the LBR facility. The LBR stack is a ring buffer typically used to profile control flow transitions resulting from branches. However, the finite depth of the LBR stack often become less effective when profiling certain high-level languages (e.g., C++), where a transition of the execution flow is accompanied by a large number of leaf function calls, each of which returns an individual parameter to form the list

of parameters for the main execution function call. A long list of such parameters returned by the leaf functions would serve to flush the data captured in the LBR stack, often losing the main execution context.

When the call stack feature is enabled, the LBR stack will capture unfiltered call data normally, but as return instructions are executed the last captured branch record is flushed from the on-chip registers in a last-in first-out (LIFO) manner. Thus, branch information relative to leaf functions will not be captured, while preserving the call stack information of the main line execution path.

The configuration of the call stack facility is summarized below:

- Set IA32_DEBUGCTL.LBR (bit 0) to enable the LBR stack to capture branch records. The source and target addresses of the call branches will be captured in the 16 pairs of From/To LBR MSRs that form the LBR stack.
- Program the Top of Stack (TOS) MSR that points to the last valid from/to pair. This register is incremented by 1, modulo 16, before recording the next pair of addresses.
- Program the branch filtering bits of MSR_LBR_SELECT (bits 0:8) as desired.
- Program the MSR_LBR_SELECT to enable LIFO filtering of return instructions with:
  - The following bits in MSR_LBR_SELECT must be set to '1': JCC, NEAR_IND_JMP, NEAR_REL_JMP, FAR_BRANCH, EN_CALLSTACK;
  - The following bits in MSR_LBR_SELECT must be cleared: NEAR_REL_CALL, NEAR-IND_CALL, NEAR_RET;
  - At most one of CPL_EQ_0, CPL_NEQ_0 is set.

Note that when call stack profiling is enabled, "zero length calls" are excluded from writing into the LBRs. (A "zero length call" uses the attribute of the call instruction to push the immediate instruction pointer on to the stack and then pops off that address into a register. This is accomplished without any matching return on the call.)

18.11.1 LBR Stack Enhancement

Processors based on Haswell microarchitecture provide 16 pairs of MSR to record last branch record information. The layout of each MSR pair is enumerated by IA32_PERF_CAPABILITIES[5:0] = 04H, and is shown in Table 18-14 and Table 18-9.

Table 18-14. MSR_LASTBRANCH_x_FROM_IP with TSX Information

Bit Field	Bit Offset	Access	Description
Data	47:0	R/W	This is the "branch from" address. See Section 18.4.8.1 for address format.
SIGN_EXT	60:48	R/W	Signed extension of bit 47 of this register.
TSX_ABORT	61	R/W	When set, indicates a TSX Abort entry LBR_FROM: EIP at the time of the TSX Abort LBR_TO: EIP of the start of HLE region, or EIP of the RTM Abort Handler
IN_TSX	62	R/W	When set, indicates the entry occurred in a TSX region
MISPRED	63	R/W	When set, indicates either the target of the branch was mispredicted and/or the direction (taken/non-taken) was mispredicted; otherwise, the target branch was predicted.

18.12 LAST BRANCH, CALL STACK, INTERRUPT, AND EXCEPTION RECORDING FOR PROCESSORS BASED ON SKYLAKE MICROARCHITECTURE

Processors based on the Skylake microarchitecture provide a number of enhancement with storing last branch records:

- enumeration of new LBR format: encoding 00101b in IA32_PERF_CAPABILITIES[5:0] is supported, see Section 18.4.8.1.
- Each LBR stack entry consists of a triplets of MSRs:

  - MSR_LASTBRANCH_x_FROM_IP, the layout is simplified, see Table 18-9.
  - MSR_LASTBRANCH_x_TO_IP, the layout is the same as Table 18-9.
  - MSR_LBR_INFO_x, stores branch prediction flag, TSX info, and elapsed cycle data.
- Size of LBR stack increased to 32.

Processors based on the Skylake microarchitecture supports the same LBR filtering capabilities as described in Table 18-13.

Table 18-15. LBR Stack Size and TOS Pointer Range

DisplayFamily_DisplayModel	Size of LBR Stack	Range of TOS Pointer
06_4EH, 06_5EH	32	0 to 31

18.12.1 MSR_LBR_INFO_x MSR

The layout of each MSR_LBR_INFO_x MSR is shown in Table 18-16.

Table 18-16. MSR_LBR_INFO_x

Bit Field	Bit Offset	Access	Description
Cycle Count (saturating)	15:0	R/W	Elapsed core clocks since last update to the LBR stack.
Reserved	60:16	R/W	Reserved
TSX_ABORT	61	R/W	When set, indicates a TSX Abort entry LBR_FROM: EIP at the time of the TSX Abort LBR_TO: EIP of the start of HLE region OR EIP of the RTM Abort Handler
IN_TSX	62	R/W	When set, indicates the entry occurred in a TSX region.
MISPRED	63	R/W	When set, indicates either the target of the branch was mispredicted and/or the direction (taken/non-taken) was mispredicted; otherwise, the target branch was predicted.

18.12.2 Streamlined Freeze_LBRs_On_PMI Operation

The FREEZE_LBRS_ON_PMI feature causes the LBRs to be frozen on a hardware request for a PMI. This prevents the LBRs from being overwritten by new branches, allowing the PMI handler to examine the control flow that preceded the PMI generation. Architectural performance monitoring version 4 and above supports a streamlined FREEZE_LBRs_ON_PMI operation for PMI service routine that replaces the legacy FREEZE_LBRs_ON_PMI operation (see Section 18.4.7).

While the legacy FREEZE_LBRS_ON_PMI clear the LBR bit in the IA32_DEBUGCTL MSR on a PMI request, the streamlined FREEZE_LBRS_ON_PMI will set the LBR_FRZ bit in IA32_PERF_GLOBAL_STATUS. Branches will not cause the LBRs to be updated when LBR_FRZ is set. Software can clear LBR_FRZ at the same time as it clears overflow bits by setting the LBR_FRZ bit as well as the needed overflow bit when writing to IA32_PERF_GLOBAL_STATUS_RESET MSR.

This streamlined behavior avoids race conditions between software and processor writes to IA32_DEBUGCTL that are possible with FREEZE_LBRS_ON_PMI clearing of the LBR enable.

18.12.3 LBR Behavior and Deep C-State

When MWAIT is used to request a C-state that is numerically higher than C1, then LBR state may be initialized to zero depending on optimized "waiting" state that is selected by the processor The affected LBR states include the FROM, TO, INFO, LAST_BRANCH, LER, and LBR_TOS registers. The LBR enable bit and LBR_FROZEN bit are not affected. The LBR-time of the first LBR record inserted after an exit from such a C-state request will be zero.

18.13 LAST BRANCH, INTERRUPT, AND EXCEPTION RECORDING (PROCESSORS BASED ON INTEL NETBURST® MICROARCHITECTURE)

Pentium 4 and Intel Xeon processors based on Intel NetBurst microarchitecture provide the following methods for recording taken branches, interrupts, and exceptions:

- Store branch records in the last branch record (LBR) stack MSRs for the most recent taken branches, interrupts, and/or exceptions in MSRs. A branch record consist of a branch-from and a branch-to instruction address.
- Send the branch records out on the system bus as branch trace messages (BTMs).
- Log BTMs in a memory-resident branch trace store (BTS) buffer.

To support these functions, the processor provides the following MSRs and related facilities:

- **MSR_DEBUGCTLA MSR** — Enables last branch, interrupt, and exception recording; single-stepping on taken branches; branch trace messages (BTMs); and branch trace store (BTS). This register is named DebugCtlMSR in the P6 family processors.
- **Debug store (DS) feature flag (CPUID.1:EDX.DS[bit 21])** — Indicates that the processor provides the debug store (DS) mechanism, which allows BTMs to be stored in a memory-resident BTS buffer.
- **CPL-qualified debug store (DS) feature flag (CPUID.1:ECX.DS-CPL[bit 4])** — Indicates that the processor provides a CPL-qualified debug store (DS) mechanism, which allows software to selectively skip sending and storing BTMs, according to specified current privilege level settings, into a memory-resident BTS buffer.
- **IA32_MISC_ENABLE MSR** — Indicates that the processor provides the BTS facilities.
- **Last branch record (LBR) stack** — The LBR stack is a circular stack that consists of four MSRs (MSR_LASTBRANCH_0 through MSR_LASTBRANCH_3) for the Pentium 4 and Intel Xeon processor family [CPUID family 0FH, models 0H-02H]. The LBR stack consists of 16 MSR pairs (MSR_LASTBRANCH_0_FROM_IP through MSR_LASTBRANCH_15_FROM_IP and MSR_LASTBRANCH_0_TO_IP through MSR_LASTBRANCH_15_TO_IP) for the Pentium 4 and Intel Xeon processor family [CPUID family 0FH, model 03H].
- **Last branch record top-of-stack (TOS) pointer** — The TOS Pointer MSR contains a 2-bit pointer (0-3) to the MSR in the LBR stack that contains the most recent branch, interrupt, or exception recorded for the Pentium 4 and Intel Xeon processor family [CPUID family 0FH, models 0H-02H]. This pointer becomes a 4-bit pointer (0-15) for the Pentium 4 and Intel Xeon processor family [CPUID family 0FH, model 03H]. See also: Table 18-17, Figure 18-12, and Section 18.13.2, "LBR Stack for Processors Based on Intel NetBurst® Microarchitecture."
- **Last exception record** — See Section 18.13.3, "Last Exception Records."

18.13.1 MSR_DEBUGCTLA MSR

The MSR_DEBUGCTLA MSR enables and disables the various last branch recording mechanisms described in the previous section. This register can be written to using the WRMSR instruction, when operating at privilege level 0 or when in real-address mode. A protected-mode operating system procedure is required to provide user access to this register. Figure 18-12 shows the flags in the MSR_DEBUGCTLA MSR. The functions of these flags are as follows:

- **LBR (last branch/interrupt/exception) flag (bit 0) —** When set, the processor records a running trace of the most recent branches, interrupts, and/or exceptions taken by the processor (prior to a debug exception being generated) in the last branch record (LBR) stack. Each branch, interrupt, or exception is recorded as a 64-bit branch record. The processor clears this flag whenever a debug exception is generated (for example,

when an instruction or data breakpoint or a single-step trap occurs). See Section 18.13.2, "LBR Stack for Processors Based on Intel NetBurst® Microarchitecture."

- **BTF (single-step on branches) flag (bit 1) —** When set, the processor treats the TF flag in the EFLAGS register as a "single-step on branches" flag rather than a "single-step on instructions" flag. This mechanism allows single-stepping the processor on taken branches. See Section 18.4.3, "Single-Stepping on Branches."
- **TR (trace message enable) flag (bit 2) —** When set, branch trace messages are enabled. Thereafter, when the processor detects a taken branch, interrupt, or exception, it sends the branch record out on the system bus as a branch trace message (BTM). See Section 18.4.4, "Branch Trace Messages."

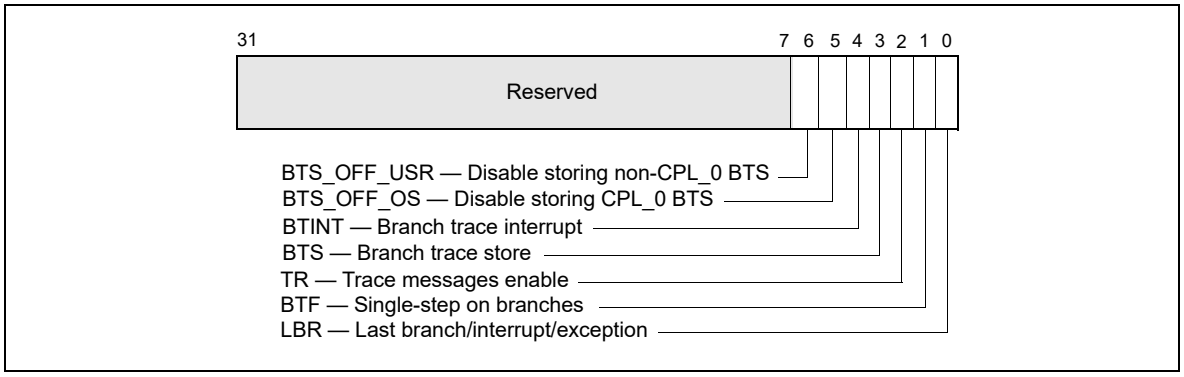

Figure 18-12. MSR_DEBUGCTLA MSR for Pentium 4 and Intel Xeon Processors

- **BTS (branch trace store) flag (bit 3) —** When set, enables the BTS facilities to log BTMs to a memory-resident BTS buffer that is part of the DS save area. See Section 18.4.9, "BTS and DS Save Area."
- **BTINT (branch trace interrupt) flag (bits 4) —** When set, the BTS facilities generate an interrupt when the BTS buffer is full. When clear, BTMs are logged to the BTS buffer in a circular fashion. See Section 18.4.5, "Branch Trace Store (BTS)."
- **BTS_OFF_OS (disable ring 0 branch trace store) flag (bit 5) —** When set, enables the BTS facilities to skip sending/logging CPL_0 BTMs to the memory-resident BTS buffer. See Section 18.13.2, "LBR Stack for Processors Based on Intel NetBurst® Microarchitecture."
- **BTS_OFF_USR (disable ring 0 branch trace store) flag (bit 6) —** When set, enables the BTS facilities to skip sending/logging non-CPL_0 BTMs to the memory-resident BTS buffer. See Section 18.13.2, "LBR Stack for Processors Based on Intel NetBurst® Microarchitecture."

NOTE

The initial implementation of BTS_OFF_USR and BTS_OFF_OS in MSR_DEBUGCTLA is shown in Figure 18-12. The BTS_OFF_USR and BTS_OFF_OS fields may be implemented on other model-specific debug control register at different locations.

See Chapter 2, "Model-Specific Registers (MSRs)" in the *Intel® 64 and IA-32 Architectures Software Developer's Manual, Volume 4* for a detailed description of each of the last branch recording MSRs.

18.13.2 LBR Stack for Processors Based on Intel NetBurst® Microarchitecture

The LBR stack is made up of LBR MSRs that are treated by the processor as a circular stack. The TOS pointer (MSR_LASTBRANCH_TOS MSR) points to the LBR MSR (or LBR MSR pair) that contains the most recent (last) branch record placed on the stack. Prior to placing a new branch record on the stack, the TOS is incremented by 1. When the TOS pointer reaches it maximum value, it wraps around to 0. See Table 18-17 and Figure 18-12.

Table 18-17. LBR MSR Stack Size and TOS Pointer Range for the Pentium® 4 and the Intel® Xeon® Processor Family

DisplayFamily_DisplayModel	Size of LBR Stack	Range of TOS Pointer
Family 0FH, Models 0H-02H; MSRs at locations 1DBH-1DEH.	4	0 to 3
Family 0FH, Models; MSRs at locations 680H-68FH.	16	0 to 15
Family 0FH, Model 03H; MSRs at locations 6C0H-6CFH.	16	0 to 15

The registers in the LBR MSR stack and the MSR_LASTBRANCH_TOS MSR are read-only and can be read using the RDMSR instruction.

Figure 18-13 shows the layout of a branch record in an LBR MSR (or MSR pair). Each branch record consists of two linear addresses, which represent the "from" and "to" instruction pointers for a branch, interrupt, or exception. The contents of the from and to addresses differ, depending on the source of the branch:

- **Taken branch** — If the record is for a taken branch, the "from" address is the address of the branch instruction and the "to" address is the target instruction of the branch.
- **Interrupt** — If the record is for an interrupt, the "from" address the return instruction pointer (RIP) saved for the interrupt and the "to" address is the address of the first instruction in the interrupt handler routine. The RIP is the linear address of the next instruction to be executed upon returning from the interrupt handler.
- **Exception** — If the record is for an exception, the "from" address is the linear address of the instruction that caused the exception to be generated and the "to" address is the address of the first instruction in the exception handler routine.

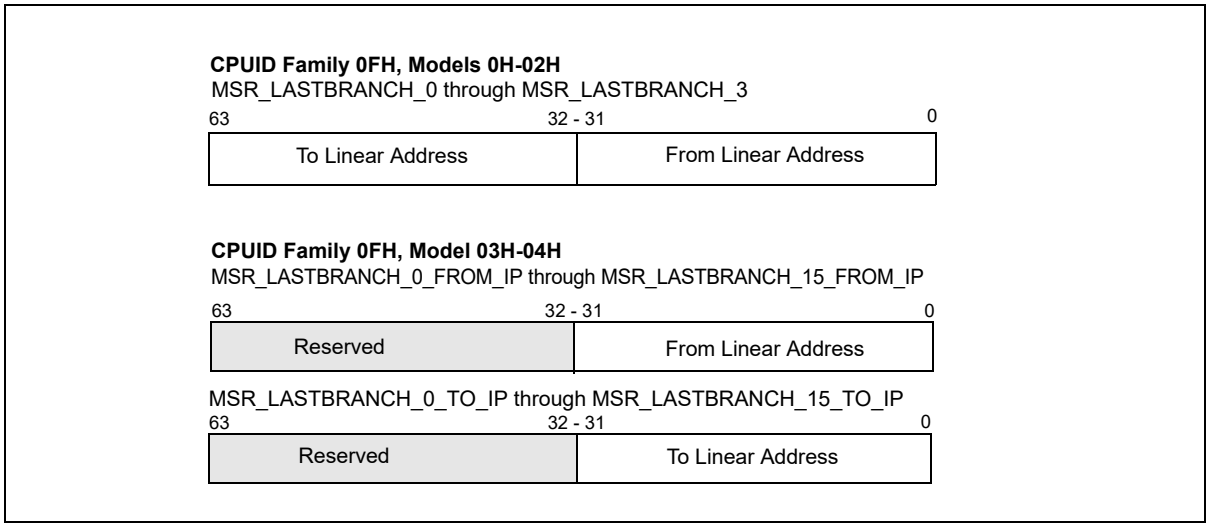

Figure 18-13. LBR MSR Branch Record Layout for the Pentium 4 and Intel® Xeon® Processor Family

Additional information is saved if an exception or interrupt occurs in conjunction with a branch instruction. If a branch instruction generates a trap type exception, two branch records are stored in the LBR stack: a branch record for the branch instruction followed by a branch record for the exception.

If a branch instruction is immediately followed by an interrupt, a branch record is stored in the LBR stack for the branch instruction followed by a record for the interrupt.

18.13.3 Last Exception Records

The Pentium 4, Intel Xeon, Pentium M, Intel® Core™ Solo, Intel® Core™ Duo, Intel® Core™2 Duo, Intel® Core™ i7 and Intel Atom® processors provide two MSRs (the MSR_LER_TO_LIP and the MSR_LER_FROM_LIP MSRs) that duplicate the functions of the LastExceptionToIP and LastExceptionFromIP MSRs found in the P6 family processors.

The MSR_LER_TO_LIP and MSR_LER_FROM_LIP MSRs contain a branch record for the last branch that the processor took prior to an exception or interrupt being generated.

18.14 LAST BRANCH, INTERRUPT, AND EXCEPTION RECORDING (INTEL® CORE™ SOLO AND INTEL® CORE™ DUO PROCESSORS)

Intel Core Solo and Intel Core Duo processors provide last branch interrupt and exception recording. This capability is almost identical to that found in Pentium 4 and Intel Xeon processors. There are differences in the stack and in some MSR names and locations.

Note the following:

- **IA32_DEBUGCTL MSR —** Enables debug trace interrupt, debug trace store, trace messages enable, performance monitoring breakpoint flags, single stepping on branches, and last branch. IA32_DEBUGCTL MSR is located at register address 01D9H.

  See Figure 18-14 for the layout and the entries below for a description of the flags:

  — **LBR (last branch/interrupt/exception) flag (bit 0) —** When set, the processor records a running trace of the most recent branches, interrupts, and/or exceptions taken by the processor (prior to a debug exception being generated) in the last branch record (LBR) stack. For more information, see the "Last Branch Record (LBR) Stack" below.

  — **BTF (single-step on branches) flag (bit 1) —** When set, the processor treats the TF flag in the EFLAGS register as a "single-step on branches" flag rather than a "single-step on instructions" flag. This mechanism allows single-stepping the processor on taken branches. See Section 18.4.3, "Single-Stepping on Branches," for more information about the BTF flag.

  — **TR (trace message enable) flag (bit 6) —** When set, branch trace messages are enabled. When the processor detects a taken branch, interrupt, or exception; it sends the branch record out on the system bus as a branch trace message (BTM). See Section 18.4.4, "Branch Trace Messages," for more information about the TR flag.

  — **BTS (branch trace store) flag (bit 7) —** When set, the flag enables BTS facilities to log BTMs to a memory-resident BTS buffer that is part of the DS save area. See Section 18.4.9, "BTS and DS Save Area."

  — **BTINT (branch trace interrupt) flag (bits 8) —** When set, the BTS facilities generate an interrupt when the BTS buffer is full. When clear, BTMs are logged to the BTS buffer in a circular fashion. See Section 18.4.5, "Branch Trace Store (BTS)," for a description of this mechanism.

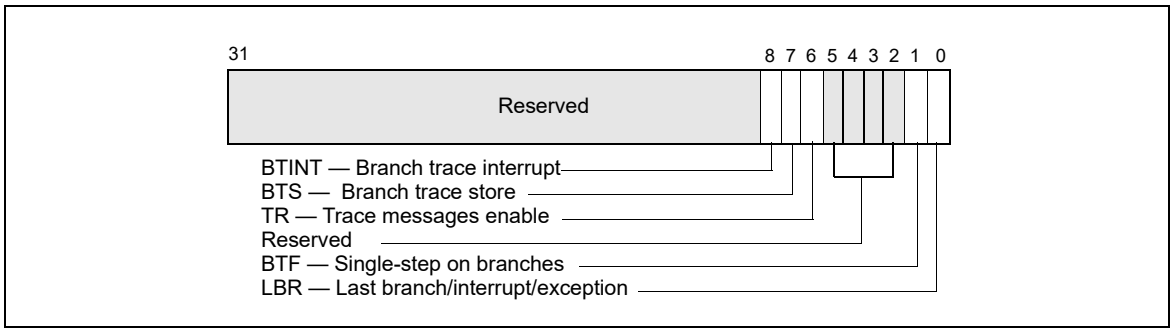

Figure 18-14. IA32_DEBUGCTL MSR for Intel® Core™ Solo and Intel® Core™ Duo Processors

- **Debug store (DS) feature flag (bit 21), returned by the CPUID instruction** — Indicates that the processor provides the debug store (DS) mechanism, which allows BTMs to be stored in a memory-resident BTS buffer. See Section 18.4.5, "Branch Trace Store (BTS)."
- **Last Branch Record (LBR) Stack** — The LBR stack consists of 8 MSRs (MSR_LASTBRANCH_0 through MSR_LASTBRANCH_7); bits 31-0 hold the 'from' address, bits 63-32 hold the 'to' address (MSR addresses start at 40H). See Figure 18-15.

- **Last Branch Record Top-of-Stack (TOS) Pointer** — The TOS Pointer MSR contains a 3-bit pointer (bits 2-0) to the MSR in the LBR stack that contains the most recent branch, interrupt, or exception recorded. For Intel Core Solo and Intel Core Duo processors, this MSR is located at register address 01C9H.

For compatibility, the Intel Core Solo and Intel Core Duo processors provide two 32-bit MSRs (the MSR_LER_TO_LIP and the MSR_LER_FROM_LIP MSRs) that duplicate functions of the LastExceptionToIP and Last-ExceptionFromIP MSRs found in P6 family processors.

For details, see Section 18.12, "Last Branch, Call Stack, Interrupt, and Exception Recording for Processors based on Skylake Microarchitecture," and Section 2.20, "MSRs In Intel® Core™ Solo and Intel® Core™ Duo Processors" in the *Intel® 64 and IA-32 Architectures Software Developer's Manual, Volume 4*.

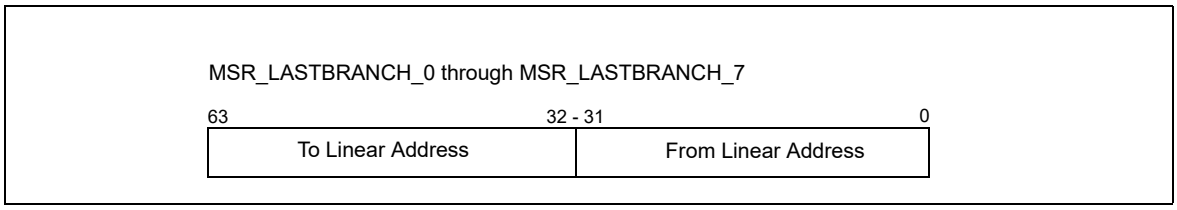

Figure 18-15. LBR Branch Record Layout for the Intel® Core™ Solo and Intel® Core™ Duo Processor

18.15 LAST BRANCH, INTERRUPT, AND EXCEPTION RECORDING (PENTIUM M PROCESSORS)

Like the Pentium 4 and Intel Xeon processor family, Pentium M processors provide last branch interrupt and exception recording. The capability operates almost identically to that found in Pentium 4 and Intel Xeon processors. There are differences in the shape of the stack and in some MSR names and locations. Note the following:

- **MSR_DEBUGCTLB MSR —** Enables debug trace interrupt, debug trace store, trace messages enable, performance monitoring breakpoint flags, single stepping on branches, and last branch. For Pentium M processors, this MSR is located at register address 01D9H. See Figure 18-16 and the entries below for a description of the flags.
  - **LBR (last branch/interrupt/exception) flag (bit 0) —** When set, the processor records a running trace of the most recent branches, interrupts, and/or exceptions taken by the processor (prior to a debug exception being generated) in the last branch record (LBR) stack. For more information, see the "Last Branch Record (LBR) Stack" bullet below.
  - **BTF (single-step on branches) flag (bit 1) —** When set, the processor treats the TF flag in the EFLAGS register as a "single-step on branches" flag rather than a "single-step on instructions" flag. This mechanism allows single-stepping the processor on taken branches. See Section 18.4.3, "Single-Stepping on Branches," for more information about the BTF flag.
  - **PB*i* (performance monitoring/breakpoint pins) flags (bits 5-2) —** When these flags are set, the performance monitoring/breakpoint pins on the processor (BP0#, BP1#, BP2#, and BP3#) report breakpoint matches in the corresponding breakpoint-address registers (DR0 through DR3). The processor asserts then deasserts the corresponding BP*i*# pin when a breakpoint match occurs. When a PB*i* flag is clear, the performance monitoring/breakpoint pins report performance events. Processor execution is not affected by reporting performance events.
  - **TR (trace message enable) flag (bit 6) —** When set, branch trace messages are enabled. When the processor detects a taken branch, interrupt, or exception, it sends the branch record out on the system bus as a branch trace message (BTM). See Section 18.4.4, "Branch Trace Messages," for more information about the TR flag.
  - **BTS (branch trace store) flag (bit 7) —** When set, enables the BTS facilities to log BTMs to a memory-resident BTS buffer that is part of the DS save area. See Section 18.4.9, "BTS and DS Save Area."
  - **BTINT (branch trace interrupt) flag (bits 8) —** When set, the BTS facilities generate an interrupt when the BTS buffer is full. When clear, BTMs are logged to the BTS buffer in a circular fashion. See Section 18.4.5, "Branch Trace Store (BTS)," for a description of this mechanism.

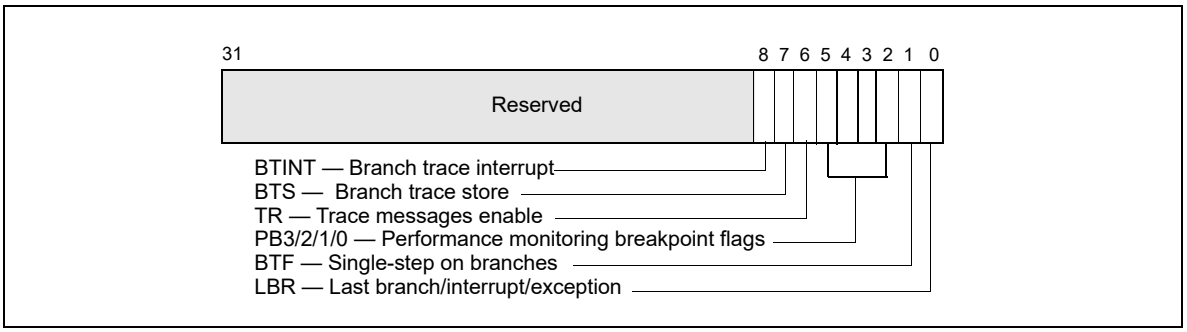

Figure 18-16. MSR_DEBUGCTLB MSR for Pentium M Processors

- **Debug store (DS) feature flag (bit 21), returned by the CPUID instruction** — Indicates that the processor provides the debug store (DS) mechanism, which allows BTMs to be stored in a memory-resident BTS buffer. See Section 18.4.5, "Branch Trace Store (BTS)."
- **Last Branch Record (LBR) Stack** — The LBR stack consists of 8 MSRs (MSR_LASTBRANCH_0 through MSR_LASTBRANCH_7); bits 31-0 hold the 'from' address, bits 63-32 hold the 'to' address. For Pentium M Processors, these pairs are located at register addresses 040H-047H. See Figure 18-17.
- **Last Branch Record Top-of-Stack (TOS) Pointer** — The TOS Pointer MSR contains a 3-bit pointer (bits 2-0) to the MSR in the LBR stack that contains the most recent branch, interrupt, or exception recorded. For Pentium M Processors, this MSR is located at register address 01C9H.

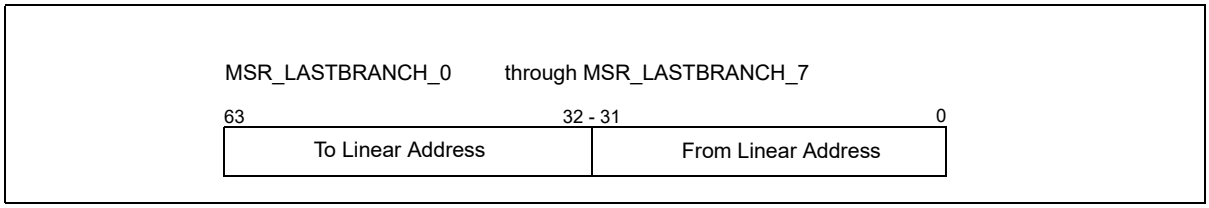

Figure 18-17. LBR Branch Record Layout for the Pentium M Processor

For more detail on these capabilities, see Section 18.13.3, "Last Exception Records," and Section 2.21, "MSRs In the Pentium M Processor" in the *Intel® 64 and IA-32 Architectures Software Developer's Manual, Volume 4*.

18.16 LAST BRANCH, INTERRUPT, AND EXCEPTION RECORDING (P6 FAMILY PROCESSORS)

The P6 family processors provide five MSRs for recording the last branch, interrupt, or exception taken by the processor: DEBUGCTLMSR, LastBranchToIP, LastBranchFromIP, LastExceptionToIP, and LastExceptionFromIP. These registers can be used to collect last branch records, to set breakpoints on branches, interrupts, and exceptions, and to single-step from one branch to the next.

See Chapter 2, "Model-Specific Registers (MSRs)" in the *Intel® 64 and IA-32 Architectures Software Developer's Manual, Volume 4* for a detailed description of each of the last branch recording MSRs.

18.16.1 DEBUGCTLMSR Register

The version of the DEBUGCTLMSR register found in the P6 family processors enables last branch, interrupt, and exception recording; taken branch breakpoints; the breakpoint reporting pins; and trace messages. This register can be written to using the WRMSR instruction, when operating at privilege level 0 or when in real-address mode.

A protected-mode operating system procedure is required to provide user access to this register. Figure 18-18 shows the flags in the DEBUGCTLMSR register for the P6 family processors. The functions of these flags are as follows:

- **LBR (last branch/interrupt/exception) flag (bit 0) —** When set, the processor records the source and target addresses (in the LastBranchToIP, LastBranchFromIP, LastExceptionToIP, and LastExceptionFromIP MSRs) for the last branch and the last exception or interrupt taken by the processor prior to a debug exception being generated. The processor clears this flag whenever a debug exception, such as an instruction or data breakpoint or single-step trap occurs.

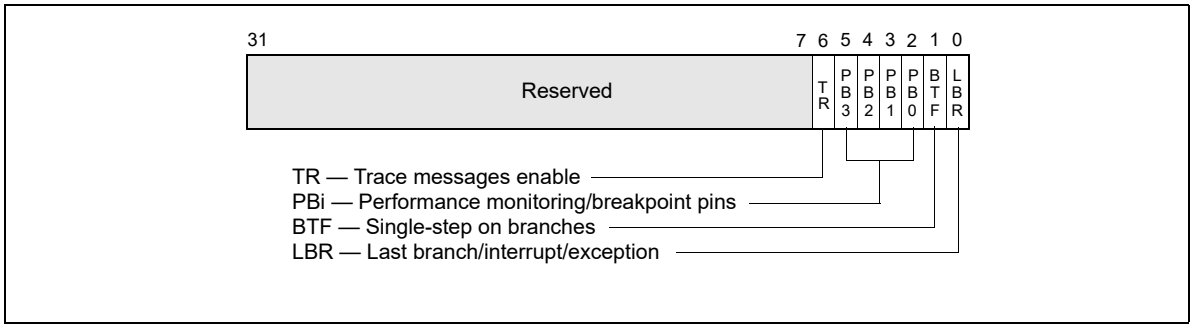

Figure 18-18. DEBUGCTLMSR Register (P6 Family Processors)

- **BTF (single-step on branches) flag (bit 1) —** When set, the processor treats the TF flag in the EFLAGS register as a "single-step on branches" flag. See Section 18.4.3, "Single-Stepping on Branches."
- **PB*i* (performance monitoring/breakpoint pins) flags (bits 2 through 5) —** When these flags are set, the performance monitoring/breakpoint pins on the processor (BP0#, BP1#, BP2#, and BP3#) report breakpoint matches in the corresponding breakpoint-address registers (DR0 through DR3). The processor asserts then deasserts the corresponding BP*i*# pin when a breakpoint match occurs. When a PB*i* flag is clear, the performance monitoring/breakpoint pins report performance events. Processor execution is not affected by reporting performance events.
- **TR (trace message enable) flag (bit 6) —** When set, trace messages are enabled as described in Section 18.4.4, "Branch Trace Messages." Setting this flag greatly reduces the performance of the processor. When trace messages are enabled, the values stored in the LastBranchToIP, LastBranchFromIP, LastExceptionToIP, and LastExceptionFromIP MSRs are undefined.

18.16.2 Last Branch and Last Exception MSRs

The LastBranchToIP and LastBranchFromIP MSRs are 32-bit registers for recording the instruction pointers for the last branch, interrupt, or exception that the processor took prior to a debug exception being generated. When a branch occurs, the processor loads the address of the branch instruction into the LastBranchFromIP MSR and loads the target address for the branch into the LastBranchToIP MSR.

When an interrupt or exception occurs (other than a debug exception), the address of the instruction that was interrupted by the exception or interrupt is loaded into the LastBranchFromIP MSR and the address of the exception or interrupt handler that is called is loaded into the LastBranchToIP MSR.

The LastExceptionToIP and LastExceptionFromIP MSRs (also 32-bit registers) record the instruction pointers for the last branch that the processor took prior to an exception or interrupt being generated. When an exception or interrupt occurs, the contents of the LastBranchToIP and LastBranchFromIP MSRs are copied into these registers before the to and from addresses of the exception or interrupt are recorded in the LastBranchToIP and LastBranchFromIP MSRs.

These registers can be read using the RDMSR instruction.

Note that the values stored in the LastBranchToIP, LastBranchFromIP, LastExceptionToIP, and LastExceptionFromIP MSRs are offsets into the current code segment, as opposed to linear addresses, which are saved in last branch records for the Pentium 4 and Intel Xeon processors.

18.16.3 Monitoring Branches, Exceptions, and Interrupts

When the LBR flag in the DEBUGCTLMSR register is set, the processor automatically begins recording branches that it takes, exceptions that are generated (except for debug exceptions), and interrupts that are serviced. Each time a branch, exception, or interrupt occurs, the processor records the to and from instruction pointers in the LastBranchToIP and LastBranchFromIP MSRs. In addition, for interrupts and exceptions, the processor copies the contents of the LastBranchToIP and LastBranchFromIP MSRs into the LastExceptionToIP and LastExceptionFromIP MSRs prior to recording the to and from addresses of the interrupt or exception.

When the processor generates a debug exception (#DB), it automatically clears the LBR flag before executing the exception handler, but does not touch the last branch and last exception MSRs. The addresses for the last branch, interrupt, or exception taken are thus retained in the LastBranchToIP and LastBranchFromIP MSRs and the addresses of the last branch prior to an interrupt or exception are retained in the LastExceptionToIP, and LastExceptionFromIP MSRs.

The debugger can use the last branch, interrupt, and/or exception addresses in combination with code-segment selectors retrieved from the stack to reset breakpoints in the breakpoint-address registers (DR0 through DR3), allowing a backward trace from the manifestation of a particular bug toward its source. Because the instruction pointers recorded in the LastBranchToIP, LastBranchFromIP, LastExceptionToIP, and LastExceptionFromIP MSRs are offsets into a code segment, software must determine the segment base address of the code segment associated with the control transfer to calculate the linear address to be placed in the breakpoint-address registers. The segment base address can be determined by reading the segment selector for the code segment from the stack and using it to locate the segment descriptor for the segment in the GDT or LDT. The segment base address can then be read from the segment descriptor.

Before resuming program execution from a debug-exception handler, the handler must set the LBR flag again to re-enable last branch and last exception/interrupt recording.

18.17 TIME-STAMP COUNTER

The Intel 64 and IA-32 architectures (beginning with the Pentium processor) define a time-stamp counter mechanism that can be used to monitor and identify the relative time occurrence of processor events. The counter's architecture includes the following components:

- **TSC flag —** A feature bit that indicates the availability of the time-stamp counter. The counter is available in an if the function CPUID.1:EDX.TSC[bit 4] = 1.
- **IA32_TIME_STAMP_COUNTER MSR** (called TSC MSR in P6 family and Pentium processors) **—** The MSR used as the counter.
- **RDTSC instruction —** An instruction used to read the time-stamp counter.
- **TSD flag —** A control register flag is used to enable or disable the time-stamp counter (enabled if CR4.TSD[bit 2] = 1).

The time-stamp counter (as implemented in the P6 family, Pentium, Pentium M, Pentium 4, Intel Xeon, Intel Core Solo and Intel Core Duo processors and later processors) is a 64-bit counter that is set to 0 following a RESET of the processor. Following a RESET, the counter increments even when the processor is halted by the HLT instruction or the external STPCLK# pin. Note that the assertion of the external DPSLP# pin may cause the time-stamp counter to stop.

Processor families increment the time-stamp counter differently:

- For Pentium M processors (family [06H], models [09H, 0DH]); for Pentium 4 processors, Intel Xeon processors (family [0FH], models [00H, 01H, or 02H]); and for P6 family processors: the time-stamp counter increments with every internal processor clock cycle.

  The internal processor clock cycle is determined by the current core-clock to bus-clock ratio. Intel® SpeedStep® technology transitions may also impact the processor clock.
- For Pentium 4 processors, Intel Xeon processors (family [0FH], models [03H and higher]); for Intel Core Solo and Intel Core Duo processors (family [06H], model [0EH]); for the Intel Xeon processor 5100 series and Intel Core 2 Duo processors (family [06H], model [0FH]); for Intel Core 2 and Intel Xeon processors (family [06H], DisplayModel [17H]); for Intel Atom processors (family [06H], DisplayModel [1CH]): the time-stamp counter increments at a constant rate. That rate may be set by the maximum core-clock to bus-clock ratio of the

processor or may be set by the maximum resolved frequency at which the processor is booted. The maximum resolved frequency may differ from the processor base frequency, see Section 20.7.2 for more detail. On certain processors, the TSC frequency may not be the same as the frequency in the brand string.

The specific processor configuration determines the behavior. Constant TSC behavior ensures that the duration of each clock tick is uniform and supports the use of the TSC as a wall clock timer even if the processor core changes frequency. This is the architectural behavior moving forward.

NOTE

To determine average processor clock frequency, Intel recommends the use of performance monitoring logic to count processor core clocks over the period of time for which the average is required. See Section 20.6.4.5, "Counting Clocks on systems with Intel® Hyper-Threading Technology in Processors Based on Intel NetBurst® Microarchitecture," and https://perfmon-events.intel.com/ for more information.

The RDTSC instruction reads the time-stamp counter and is guaranteed to return a monotonically increasing unique value whenever executed, except for a 64-bit counter wraparound. Intel guarantees that the time-stamp counter will not wraparound within 10 years after being reset. The period for counter wrap is longer for Pentium 4, Intel Xeon, P6 family, and Pentium processors.

Normally, the RDTSC instruction can be executed by programs and procedures running at any privilege level and in virtual-8086 mode. The TSD flag allows use of this instruction to be restricted to programs and procedures running at privilege level 0. A secure operating system would set the TSD flag during system initialization to disable user access to the time-stamp counter. An operating system that disables user access to the time-stamp counter should emulate the instruction through a user-accessible programming interface.

The RDTSC instruction is not serializing or ordered with other instructions. It does not necessarily wait until all previous instructions have been executed before reading the counter. Similarly, subsequent instructions may begin execution before the RDTSC instruction operation is performed.

The RDMSR and WRMSR instructions read and write the time-stamp counter, treating the time-stamp counter as an ordinary MSR (address 10H). In the Pentium 4, Intel Xeon, and P6 family processors, all 64-bits of the time-stamp counter are read using RDMSR (just as with RDTSC). When WRMSR is used to write the time-stamp counter on processors before family [0FH], models [03H, 04H]: only the low-order 32-bits of the time-stamp counter can be written (the high-order 32 bits are cleared to 0). For family [0FH], models [03H, 04H, 06H]; for family [06H]], model [0EH, 0FH]; for family [06H]], DisplayModel [17H, 1AH, 1CH, 1DH]: all 64 bits are writable.

18.17.1 Invariant TSC

The time stamp counter in newer processors may support an enhancement, referred to as invariant TSC. Processor's support for invariant TSC is indicated by CPUID.80000007H:EDX[8].

The invariant TSC will run at a constant rate in all ACPI P-, C-. and T-states. This is the architectural behavior moving forward. On processors with invariant TSC support, the OS may use the TSC for wall clock timer services (instead of ACPI or HPET timers). TSC reads are much more efficient and do not incur the overhead associated with a ring transition or access to a platform resource.

18.17.2 IA32_TSC_AUX Register and RDTSCP Support

Processors based on Nehalem microarchitecture provide an auxiliary TSC register, IA32_TSC_AUX that is designed to be used in conjunction with IA32_TSC. IA32_TSC_AUX provides a 32-bit field that is initialized by privileged software with a signature value (for example, a logical processor ID).

The primary usage of IA32_TSC_AUX in conjunction with IA32_TSC is to allow software to read the 64-bit time stamp in IA32_TSC and signature value in IA32_TSC_AUX with the instruction RDTSCP in an atomic operation. RDTSCP returns the 64-bit time stamp in EDX:EAX and the 32-bit TSC_AUX signature value in ECX. The atomicity of RDTSCP ensures that no context switch can occur between the reads of the TSC and TSC_AUX values.

Support for RDTSCP is indicated by CPUID.80000001H:EDX[27]. As with RDTSC instruction, non-ring 0 access is controlled by CR4.TSD (Time Stamp Disable flag).

User mode software can use RDTSCP to detect if CPU migration has occurred between successive reads of the TSC. It can also be used to adjust for per-CPU differences in TSC values in a NUMA system.

18.17.3 Time-Stamp Counter Adjustment

Software can modify the value of the time-stamp counter (TSC) of a logical processor by using the WRMSR instruction to write to the IA32_TIME_STAMP_COUNTER MSR (address 10H). Because such a write applies only to that logical processor, software seeking to synchronize the TSC values of multiple logical processors must perform these writes on each logical processor. It may be difficult for software to do this in a way that ensures that all logical processors will have the same value for the TSC at a given point in time.

The synchronization of TSC adjustment can be simplified by using the 64-bit IA32_TSC_ADJUST MSR (address 3BH). Like the IA32_TIME_STAMP_COUNTER MSR, the IA32_TSC_ADJUST MSR is maintained separately for each logical processor. A logical processor maintains and uses the IA32_TSC_ADJUST MSR as follows:

- On RESET, the value of the IA32_TSC_ADJUST MSR is 0.
- If an execution of WRMSR to the IA32_TIME_STAMP_COUNTER MSR adds (or subtracts) value X from the TSC, the logical processor also adds (or subtracts) value X from the IA32_TSC_ADJUST MSR.
- If an execution of WRMSR to the IA32_TSC_ADJUST MSR adds (or subtracts) value X from that MSR, the logical processor also adds (or subtracts) value X from the TSC.

Unlike the TSC, the value of the IA32_TSC_ADJUST MSR changes only in response to WRMSR (either to the MSR itself, or to the IA32_TIME_STAMP_COUNTER MSR). Its value does not otherwise change as time elapses. Software seeking to adjust the TSC can do so by using WRMSR to write the same value to the IA32_TSC_ADJUST MSR on each logical processor.

Processor support for the IA32_TSC_ADJUST MSR is indicated by CPUID.(EAX=07H, ECX=0H):EBX.TSC_ADJUST (bit 1).

18.17.4 Invariant Time-Keeping

The invariant TSC is based on the invariant timekeeping hardware (called Always Running Timer or ART), that runs at the core crystal clock frequency. The ratio defined by CPUID leaf 15H expresses the frequency relationship between the ART hardware and TSC.

If CPUID.15H:EBX[31:0] != 0 and CPUID.80000007H:EDX[InvariantTSC] = 1, the following linearity relationship holds between TSC and the ART hardware:

TSC_Value = (ART_Value * CPUID.15H:EBX[31:0])/ CPUID.15H:EAX[31:0] + K

Where 'K' is an offset that can be adjusted by a privileged agent[1].

When ART hardware is reset, both invariant TSC and K are also reset.

18.18 INTEL® RESOURCE DIRECTOR TECHNOLOGY (INTEL® RDT) MONITORING FEATURES

The Intel Resource Director Technology (Intel RDT) feature set provides a set of monitoring capabilities including Cache Monitoring Technology (CMT) and Memory Bandwidth Monitoring (MBM). The Intel® Xeon® processor E5 v3 family introduced resource monitoring capability in each logical processor to measure specific platform shared resource metrics, for example, L3 cache occupancy. The programming interface for these monitoring features is described in this section. Two features within the monitoring feature set provided are described - Cache Monitoring Technology (CMT) and Memory Bandwidth Monitoring.

1. IA32_TSC_ADJUST MSR and the TSC-offset field in the VM execution controls of VMCS are some of the common interfaces that privileged software can use to manage the time stamp counter for keeping time

Cache Monitoring Technology (CMT) allows an Operating System, Hypervisor or similar system management agent to determine the usage of cache by applications running on the platform. The initial implementation is directed at L3 cache monitoring (currently the last level cache in most server platforms).

Memory Bandwidth Monitoring (MBM), introduced in the Intel® Xeon® processor E5 v4 family, builds on the CMT infrastructure to allow monitoring of bandwidth from one level of the cache hierarchy to the next - in this case focusing on the L3 cache, which is typically backed directly by system memory. As a result of this implementation, memory bandwidth can be monitored.

The monitoring mechanisms described provide the following key shared infrastructure features:

- A mechanism to enumerate the presence of the monitoring capabilities within the platform (via a CPUID feature bit).
- A framework to enumerate the details of each sub-feature (including CMT and MBM, as discussed later, via CPUID leaves and sub-leaves).
- A mechanism for the OS or Hypervisor to indicate a software-defined ID for each of the software threads (applications, virtual machines, etc.) that are scheduled to run on a logical processor. These identifiers are known as Resource Monitoring IDs (RMIDs).
- Mechanisms in hardware to monitor cache occupancy and bandwidth statistics as applicable to a given product generation on a per software-id basis.
- Mechanisms for the OS or Hypervisor to read back the collected metrics such as L3 occupancy or Memory Bandwidth for a given software ID at any point during runtime.

18.18.1 Overview of Cache Monitoring Technology and Memory Bandwidth Monitoring

The shared resource monitoring features described in this chapter provide a layer of abstraction between applications and logical processors through the use of **Resource Monitoring ID**s (RMIDs). Each logical processor in the system can be assigned an RMID independently, or multiple logical processors can be assigned to the same RMID value (e.g., to track an application with multiple threads). For each logical processor, only one RMID value is active at a time. This is enforced by the IA32_PQR_ASSOC MSR, which specifies the active RMID of a logical processor. Writing to this MSR by software changes the active RMID of the logical processor from an old value to a new value.

The underlying platform shared resource monitoring hardware tracks cache metrics such as cache utilization and misses as a result of memory accesses according to the RMIDs and reports monitored data via a counter register (IA32_QM_CTR). The specific event types supported vary by generation and can be enumerated via CPUID. Before reading back monitored data software must configure an event selection MSR (IA32_QM_EVTSEL) to specify which metric is to be reported, and the specific RMID for which the data should be returned.

Processor support of the monitoring framework and sub-features such as CMT is reported via the CPUID instruction. The resource type available to the monitoring framework is enumerated via a new leaf function in CPUID. Reading and writing to the monitoring MSRs requires the RDMSR and WRMSR instructions.

The Cache Monitoring Technology feature set provides the following unique mechanisms:

- A mechanism to enumerate the presence and details of the CMT feature as applicable to a given level of the cache hierarchy, independent of other monitoring features.
- CMT-specific event codes to read occupancy for a given level of the cache hierarchy.

The Memory Bandwidth Monitoring feature provides the following unique mechanisms:

- A mechanism to enumerate the presence and details of the MBM feature as applicable to a given level of the cache hierarchy, independent of other monitoring features.
- MBM-specific event codes to read bandwidth out to the next level of the hierarchy and various sub-event codes to read more specific metrics as discussed later (e.g., total bandwidth vs. bandwidth only from local memory controllers on the same package).

18.18.2 Enabling Monitoring: Usage Flow

Figure 18-19 illustrates the key steps for OS/VMM to detect support of shared resource monitoring features such as CMT and enable resource monitoring for available resource types and monitoring events.

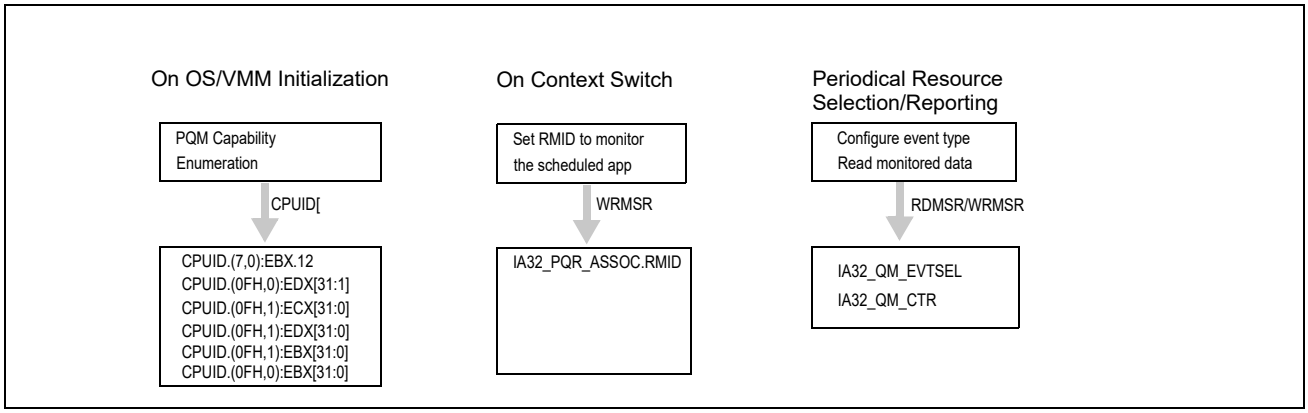

Figure 18-19. Platform Shared Resource Monitoring Usage Flow

18.18.3 Enumeration and Detecting Support of Cache Monitoring Technology and Memory Bandwidth Monitoring

Software can query processor support of shared resource monitoring features capabilities by executing CPUID instruction with EAX = 07H, ECX = 0H as input. If CPUID.(EAX=07H, ECX=0):EBX.PQM[bit 12] reports 1, the processor provides the following programming interfaces for shared resource monitoring, including Cache Monitoring Technology:

- CPUID leaf function 0FH (Shared Resource Monitoring Enumeration leaf) provides information on available resource types (see Section 18.18.4), and monitoring capabilities for each resource type (see Section 18.18.5). Note CMT and MBM capabilities are enumerated as separate event vectors using shared enumeration infrastructure under a given resource type.
- IA32_PQR_ASSOC.RMID: The per-logical-processor MSR, IA32_PQR_ASSOC, that OS/VMM can use to assign an RMID to each logical processor, see Section 18.18.6.
- IA32_QM_EVTSEL: This MSR specifies an Event ID (EvtID) and an RMID which the platform uses to look up and provide monitoring data in the monitoring counter, IA32_QM_CTR, see Section 18.18.7.
- IA32_QM_CTR: This MSR reports monitored resource data when available along with bits to allow software to check for error conditions and verify data validity.

Software must follow the following sequence of enumeration to discover Cache Monitoring Technology capabilities:

1. Execute CPUID with EAX=0 to discover the "cpuid_maxLeaf" supported in the processor;
2. If cpuid_maxLeaf >= 7, then execute CPUID with EAX=7, ECX= 0 to verify CPUID.(EAX=07H, ECX=0):EBX.PQM[bit 12] is set;
3. If CPUID.(EAX=07H, ECX=0):EBX.PQM[bit 12] = 1, then execute CPUID with EAX=0FH, ECX= 0 to query available resource types that support monitoring;
4. If CPUID.(EAX=0FH, ECX=0):EDX.L3[bit 1] = 1, then execute CPUID with EAX=0FH, ECX= 1 to query the specific capabilities of L3 Cache Monitoring Technology (CMT) and Memory Bandwidth Monitoring.
5. If CPUID.(EAX=0FH, ECX=0):EDX reports additional resource types supporting monitoring, then execute CPUID with EAX=0FH, ECX set to a corresponding resource type ID (ResID) as enumerated by the bit position of CPUID.(EAX=0FH, ECX=0):EDX.

18.18.4 Monitoring Resource Type and Capability Enumeration

CPUID leaf function 0FH (Shared Resource Monitoring Enumeration leaf) provides one sub-leaf (sub-function 0) that reports shared enumeration infrastructure, and one or more sub-functions that report feature-specific enumeration data:

- Monitoring leaf sub-function 0 enumerates available resources that support monitoring, i.e., executing CPUID with EAX=0FH and ECX=0H. In the initial implementation, L3 cache is the only resource type available. Each

supported resource type is represented by a bit in CPUID.(EAX=0FH, ECX=0):EDX[31:1]. The bit position corresponds to the sub-leaf index (ResID) that software must use to query details of the monitoring capability of that resource type (see Figure 18-21 and Figure 18-22). Reserved bits of CPUID.(EAX=0FH, ECX=0):EDX[31:2] correspond to unsupported sub-leaves of the CPUID.0FH leaf. Additionally, CPUID.(EAX=0FH, ECX=0H):EBX reports the highest RMID value of any resource type that supports monitoring in the processor.

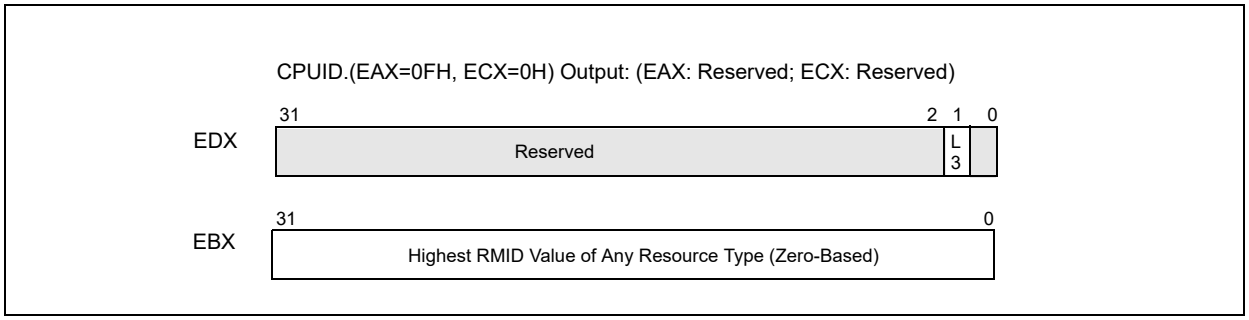

Figure 18-20. CPUID.(EAX=0FH, ECX=0H) Monitoring Resource Type Enumeration

18.18.5 Feature-Specific Enumeration

Each additional sub-leaf of CPUID.(EAX=0FH, ECX=ResID) enumerates the specific details for software to program Monitoring MSRs using the resource type associated with the given ResID.

Note that in future Monitoring implementations the meanings of the returned registers may vary in other sub-leaves that are not yet defined. The registers will be specified and defined on a per-ResID basis.

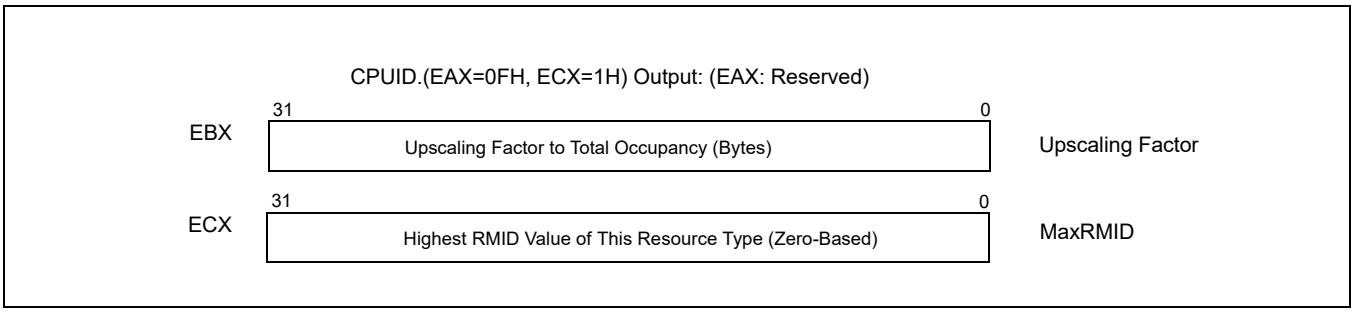

Figure 18-21. L3 Cache Monitoring Capability Enumeration Data (CPUID.(EAX=0FH, ECX=1H))

For each supported Cache Monitoring resource type, hardware supports only a finite number of RMIDs. CPUID.(EAX=0FH, ECX=1H).ECX enumerates the highest RMID value that can be monitored with this resource type, see Figure 18-21.

CPUID.(EAX=0FH, ECX=1H).EDX specifies a bit vector that is used to look up the EventID (See Figure 18-22 and Table 18-18) that software must program with IA32_QM_EVTSEL in order to retrieve event data. After software configures IA32_QMEVTSEL with the desired RMID and EventID, it can read the resulting data from IA32_QM_CTR. The raw numerical value reported from IA32_QM_CTR can be converted to the final value (occupancy in bytes or bandwidth in bytes per sampled time period) by multiplying the counter value by the value from CPUID.(EAX=0FH, ECX=1H).EBX, see Figure 18-21.

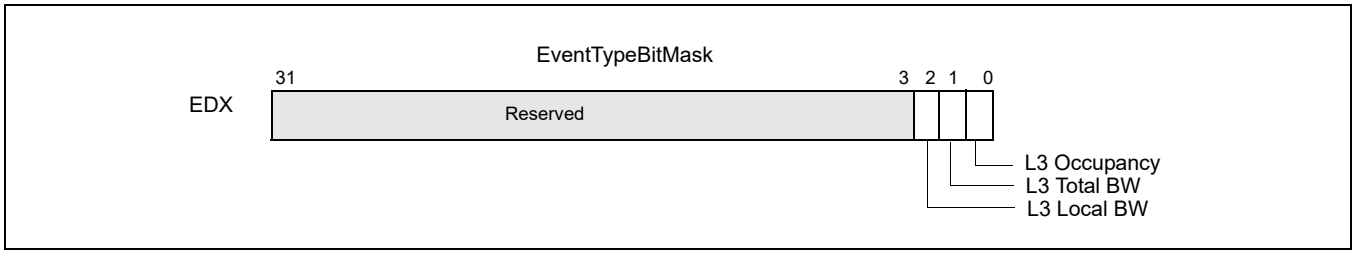

Figure 18-22. L3 Cache Monitoring Capability Enumeration Event Type Bit Vector (CPUID.(EAX=0FH, ECX=1H))

18.18.5.1 Cache Monitoring Technology

On processors for which Cache Monitoring Technology supports the L3 cache occupancy event, CPUID.(EAX=0FH, ECX=1H).EDX would return with only bit 0 set. The corresponding event ID can be looked up from Table 18-18. The L3 occupancy data accumulated in IA32_QM_CTR can be converted to total occupancy (in bytes) by multiplying with CPUID.(EAX=0FH, ECX=1H).EBX.

Event codes for Cache Monitoring Technology are discussed in the next section.

18.18.5.2 Memory Bandwidth Monitoring

On processors that monitoring supports Memory Bandwidth Monitoring using ResID=1 (L3), two additional bits will be set in the vector at CPUID.(EAX=0FH, ECX=1H).EDX:

- CPUID.(EAX=0FH, ECX=1H).EDX[bit 1]: indicates the L3 total external bandwidth monitoring event is supported if set. This event monitors the L3 total external bandwidth to the next level of the cache hierarchy, including all demand and prefetch misses from the L3 to the next hierarchy of the memory system. In most platforms, this represents memory bandwidth.
- CPUID.(EAX=0FH, ECX=1H).EDX[bit 2]: indicates L3 local memory bandwidth monitoring event is supported if set. This event monitors the L3 external bandwidth satisfied by the local memory. In most platforms that support this event, L3 requests are likely serviced by a memory system with non-uniform memory architecture. This allows bandwidth to off-package memory resources to be tracked by subtracting local from total bandwidth (for instance, bandwidth over QPI to a memory controller on another physical processor could be tracked by subtraction). Note that it is not possible to read the local and total bandwidth atomically; multiple operations are needed. Because of this, it is possible for the counters to change in between the two reads.

The corresponding Event ID can be looked up from Table 18-18. The L3 bandwidth data accumulated in IA32_QM_CTR can be converted to total bandwidth (in bytes) using CPUID.(EAX=0FH, ECX=1H).EBX.

Table 18-18. Monitoring Supported Event IDs

Event Type	Event ID	Context
L3 Cache Occupancy	01H	Cache Monitoring Technology
L3 Total External Bandwidth	02H	MBM
L3 Local External Bandwidth	03H	MBM
Reserved	All other event codes	N/A

18.18.6 Monitoring Resource RMID Association

After Monitoring and sub-features has been enumerated, software can begin using the monitoring features. The first step is to associate a given software thread (or multiple threads as part of an application, VM, group of applications or other abstraction) with an RMID.

Note that the process of associating an RMID with a given software thread is the same for all shared resource monitoring features (CMT, MBM), and a given RMID number has the same meaning from the viewpoint of any logical processors in a package. Stated another way, a thread may be associated in a 1:1 mapping with an RMID, and that

RMID may allow cache occupancy, memory bandwidth information or other monitoring data to be read back later with monitoring event codes (retrieving data is discussed in a previous section).

The association of an application thread with an RMID requires an OS to program the per-logical-processor MSR IA32_PQR_ASSOC at context swap time (updates may also be made at any other arbitrary points during program execution such as application phase changes). The IA32_PQR_ASSOC MSR specifies the active RMID that monitoring hardware will use to tag internal operations, such as L3 cache requests. The layout of the MSR is shown in Figure 18-23. Software specifies the active RMID to monitor in the IA32_PQR_ASSOC.RMID field. The width of the RMID field can vary from one implementation to another, and is derived from Ceil (LOG_2 (1 + CPUID.(EAX=0FH, ECX=0):EBX[31:0])). The value of IA32_PQR_ASSOC after power-on is 0.

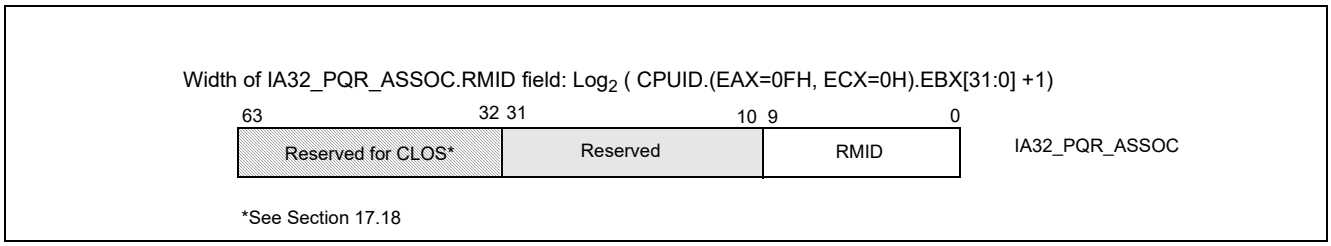

Figure 18-23. IA32_PQR_ASSOC MSR

In the initial implementation, the width of the RMID field is up to 10 bits wide, zero-referenced and fully encoded. However, software must use CPUID to query the maximum RMID supported by the processor. If a value larger than the maximum RMID is written to IA32_PQR_ASSOC.RMID, a #GP(0) fault will be generated.

RMIDs have a global scope within the physical package- if an RMID is assigned to one logical processor then the same RMID can be used to read multiple thread attributes later (for example, L3 cache occupancy or external bandwidth from the L3 to the next level of the cache hierarchy). In a multiple LLC platform the RMIDs are to be reassigned by the OS or VMM scheduler when an application is migrated across LLCs.

Note that in a situation where Monitoring supports multiple resource types, some upper range of RMIDs (e.g., RMID 31) may only be supported by one resource type but not by another resource type.

18.18.7 Monitoring Resource Selection and Reporting Infrastructure

The reporting mechanism for Cache Monitoring Technology and other related features is architecturally exposed as an MSR pair that can be programmed and read to measure various metrics such as the L3 cache occupancy (CMT) and bandwidths (MBM) depending on the level of Monitoring support provided by the platform. Data is reported back on a per-RMID basis. These events do not trigger based on event counts or trigger APIC interrupts (e.g., no Performance Monitoring Interrupt occurs based on counts). Rather, they are used to sample counts explicitly.

The MSR pair for the shared resource monitoring features (CMT, MBM) is separate from and not shared with architectural Perfmon counters, meaning software can use these monitoring features simultaneously with the Perfmon counters.

Access to the aggregated monitoring information is accomplished through the following programmable monitoring MSRs:

- IA32_QM_EVTSEL: This MSR provides a role similar to the event select MSRs for programmable performance monitoring described in Chapter 18. The simplified layout of the MSR is shown in Figure 18-24. Bits IA32_QM_EVTSEL.EvtID (bits 7:0) specify an event code of a supported resource type for hardware to report monitored data associated with IA32_QM_EVTSEL.RMID (bits 41:32). Software can configure IA32_QM_EVTSEL.RMID with any RMID that is active within the physical processor. The width of IA32_QM_EVTSEL.RMID matches that of IA32_PQR_ASSOC.RMID. Supported event codes for the IA32_QM_EVTSEL register are shown in Table 18-18. Note that valid event codes may not necessarily map directly to the bit position used to enumerate support for the resource via CPUID.

  Software can program an RMID / Event ID pair into the IA32_QM_EVTSEL MSR bit field to select an RMID to read a particular counter for a given resource. The currently supported list of Monitoring Event IDs is discussed in Section 18.18.5, which covers feature-specific details.

Thread access to the IA32_QM_EVTSEL and IA32_QM_CTR MSR pair should be serialized (that is, treated as a critical section under lock) to avoid situations where one thread changes the RMID/EvtID just before another thread reads monitoring data from IA32_QM_CTR.

- IA32_QM_CTR: This MSR reports monitored data when available. It contains three bit fields. If software configures an unsupported RMID or event type in IA32_QM_EVTSEL, then IA32_QM_CTR.Error (bit 63) will be set, indicating there is no valid data to report. If IA32_QM_CTR.Unavailable (bit 62) is set, it indicates monitored data for the RMID is not available, and IA32_QM_CTR.data (bits 61:0) should be ignored. Therefore, IA32_QM_CTR.data (bits 61:0) is valid only if bit 63 and 62 are both clear. For Cache Monitoring Technology, software can convert IA32_QM_CTR.data into cache occupancy or bandwidth metrics expressed in bytes by multiplying with the conversion factor from CPUID.(EAX=0FH, ECX=1H).EBX.

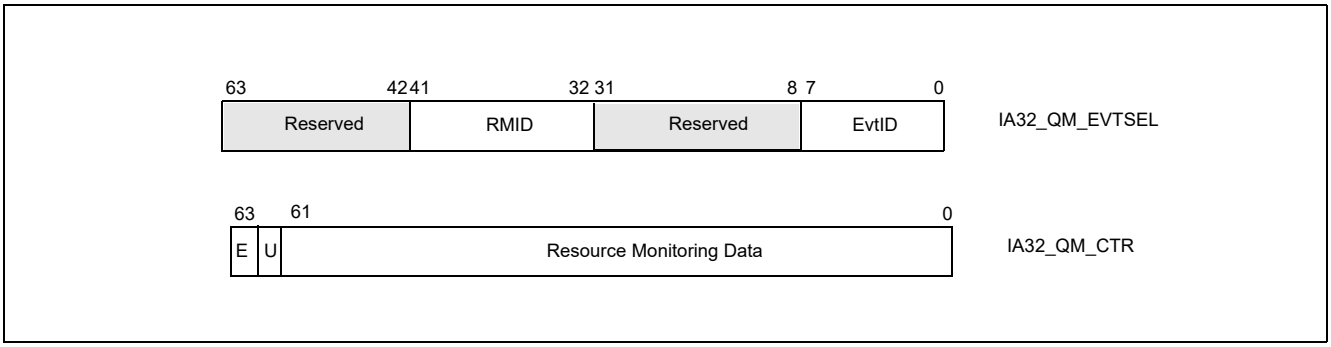

Figure 18-24. IA32_QM_EVTSEL and IA32_QM_CTR MSRs

18.18.8 Monitoring Programming Considerations

Figure 18-23 illustrates how system software can program IA32_QOSEVTSEL and IA32_QM_CTR to perform resource monitoring.

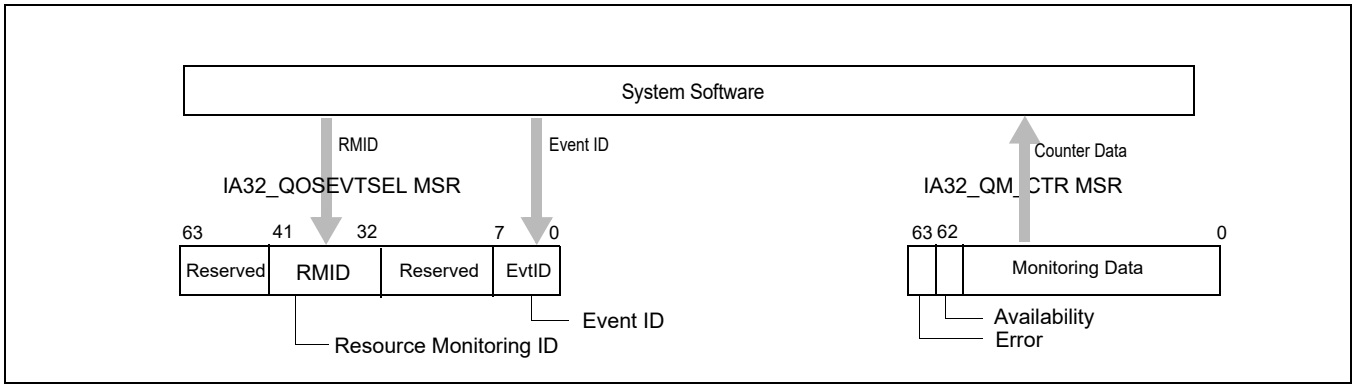

Figure 18-25. Software Usage of Cache Monitoring Resources

Though the field provided in IA32_QM_CTR allows for up to 62 bits of data to be returned, often a subset of bits are used. With Cache Monitoring Technology for instance, the number of bits used will be proportional to the base-two logarithm of the total cache size divided by the Upscaling Factor from CPUID.

In Memory Bandwidth Monitoring the initial counter size is 24 bits, and retrieving the value at 1Hz or faster is sufficient to ensure at most one rollover per sampling period. Any future changes to counter width will be enumerated to software.

18.18.8.1 Monitoring Dynamic Configuration

Both the IA32_QM_EVTSEL and IA32_PQR_ASSOC registers are accessible and modifiable at any time during execution using RDMSR/WRMSR unless otherwise noted. When writing to these MSRs a #GP(0) will be generated if any of the following conditions occur:

- A reserved bit is modified,
- An RMID exceeding the maxRMID is used.

18.18.8.2 Monitoring Operation With Power Saving Features

Note that some advanced power management features such as deep package C-states may shrink the L3 cache and cause CMT occupancy count to be reduced. MBM bandwidth counts may increase due to flushing cached data out of L3.

18.18.8.3 Monitoring Operation with Other Operating Modes

The states in IA32_PQR_ASSOC and monitoring counter are unmodified across an SMI delivery. Thus, the execution of SMM handler code and SMM handler's data can manifest as spurious contribution in the monitored data.

It is possible for an SMM handler to minimize the impact on of spurious contribution in the QOS monitoring counters by reserving a dedicated RMID for monitoring the SMM handler. Such an SMM handler can save the previously configured QOS Monitoring state immediately upon entering SMM, and restoring the QOS monitoring state back to the prev-SMM RMID upon exit.

18.18.8.4 Monitoring Operation with RAS Features

In general, the Reliability, Availability, and Serviceability (RAS) features present in Intel Platforms are not expected to significantly affect shared resource monitoring counts. In cases where software RAS features cause memory copies or cache accesses, these may be tracked and may influence the shared resource monitoring counter values.

18.19 INTEL® RESOURCE DIRECTOR TECHNOLOGY (INTEL® RDT) ALLOCATION FEATURES

The Intel Resource Director Technology (Intel RDT) feature set provides a set of allocation (resource control) capabilities including Cache Allocation Technology (CAT) and Code and Data Prioritization (CDP). The Intel Xeon processor E5 v4 family (and a subset of communication-focused processors in the Intel Xeon E5 v3 family) introduce capabilities to configure and make use of the Cache Allocation Technology (CAT) mechanisms on the L3 cache. Certain Intel Atom processors also provide support for control over the L2 cache, with capabilities as described below. The programming interface for Cache Allocation Technology and for the more general allocation capabilities are described in the rest of this chapter. The CAT and CDP capabilities, where architecturally supported, may be detected and enumerated in software using the *CPUID* instruction, as described in this chapter.

The Intel Xeon Scalable Processor Family introduces the Memory Bandwidth Allocation (MBA) feature which provides indirect control over the memory bandwidth available to CPU cores, and is discussed later in this chapter.

18.19.1 Introduction to Cache Allocation Technology (CAT)

Cache Allocation Technology enables an Operating System (OS), Hypervisor /Virtual Machine Manager (VMM) or similar system service management agent to specify the amount of cache space into which an application can fill (as a hint to hardware - certain features such as power management may override CAT settings). Specialized user-level implementations with minimal OS support are also possible, though not necessarily recommended (see notes below for OS/Hypervisor with respect to ring 3 software and virtual guests). Depending on the processor family, L2 or L3 cache allocation capability may be provided, and the technology is designed to scale across multiple cache levels and technology generations.

Software can determine which levels are supported in a given platform programmatically using CPUID as described in the following sections.

The CAT mechanisms defined in this document provide the following key features:

- A mechanism to enumerate platform Cache Allocation Technology capabilities and available resource types that provides CAT control capabilities. For implementations that support Cache Allocation Technology, CPUID provides enumeration support to query which levels of the cache hierarchy are supported and specific CAT capabilities, such as the max allocation bitmask size,
- A mechanism for the OS or Hypervisor to configure the amount of a resource available to a particular Class of Service via a list of allocation bitmasks,
- Mechanisms for the OS or Hypervisor to signal the Class of Service to which an application belongs, and
- Hardware mechanisms to guide the LLC fill policy when an application has been designated to belong to a specific Class of Service.

Note that for many usages, an OS or Hypervisor may not want to expose Cache Allocation Technology mechanisms to Ring3 software or virtualized guests.

The Cache Allocation Technology feature enables more cache resources (i.e., cache space) to be made available for high priority applications based on guidance from the execution environment as shown in Figure 18-26. The architecture also allows dynamic resource reassignment during runtime to further optimize the performance of the high priority application with minimal degradation to the low priority app. Additionally, resources can be rebalanced for system throughput benefit across uses cases of OSes, VMMs, containers, and other scenarios by managing the CPUID and MSR interfaces. This section describes the hardware and software support required in the platform including what is required of the execution environment (i.e., OS/VMM) to support such resource control. Note that in Figure 18-26 the L3 Cache is shown as an example resource.

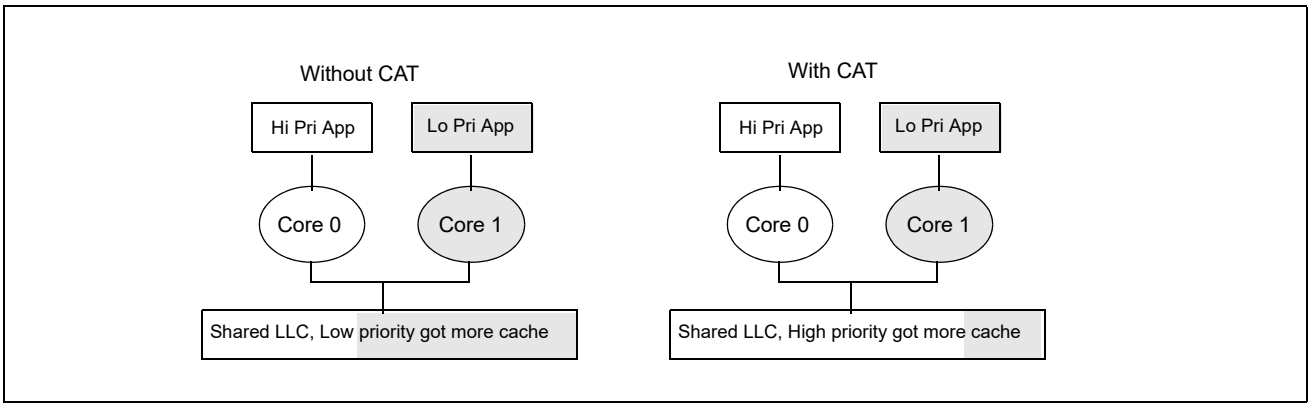

Figure 18-26. Cache Allocation Technology Enables Allocation of More Resources to High Priority Applications

18.19.2 Cache Allocation Technology Architecture

The fundamental goal of Cache Allocation Technology is to enable resource allocation based on application priority or Class of Service (COS or CLOS). The processor exposes a set of Classes of Service into which applications (or individual threads) can be assigned. Cache allocation for the respective applications or threads is then restricted based on the class with which they are associated. Each Class of Service can be configured using capacity bitmasks (CBMs) which represent capacity and indicate the degree of overlap and isolation between classes. For each logical processor there is a register exposed (referred to here as the IA32_PQR_ASSOC MSR or PQR) to allow the OS/VMM to specify a COS when an application, thread or VM is scheduled.

The usage of Classes of Service (COS) are consistent across resources and a COS may have multiple resource control attributes attached, which reduces software overhead at context swap time. Rather than adding new types of COS tags per resource for instance, the COS management overhead is constant. Cache allocation for the indicated application/thread/container/VM is then controlled automatically by the hardware based on the class and the bitmask associated with that class. Bitmasks are configured via the IA32_resourceType_MASK_n MSRs, where resourceType indicates a resource type (e.g., "L3" for the L3 cache) and "n" indicates a COS number.

The basic ingredients of Cache Allocation Technology are as follows:

- An architecturally exposed mechanism using CPUID to indicate whether CAT is supported, and what resource types are available which can be controlled,
- For each available resourceType, CPUID also enumerates the total number of Classes of Services and the length of the capacity bitmasks that can be used to enforce cache allocation to applications on the platform,
- An architecturally exposed mechanism to allow the execution environment (OS/VMM) to configure the behavior of different classes of service using the bitmasks available,
- An architecturally exposed mechanism to allow the execution environment (OS/VMM) to assign a COS to an executing software thread (i.e., associating the active CR3 of a logical processor with the COS in IA32_PQR_ASSOC),
- Implementation-dependent mechanisms to indicate which COS is associated with a memory access and to enforce the cache allocation on a per COS basis.

A capacity bitmask (CBM) provides a hint to the hardware indicating the cache space an application should be limited to as well as providing an indication of overlap and isolation in the CAT-capable cache from other applications contending for the cache. The bit length of the capacity mask available generally depends on the configuration of the cache and is specified in the enumeration process for CAT in CPUID (this may vary between models in a processor family as well). Similarly, other parameters such as the number of supported COS may vary for each resource type, and these details can be enumerated via CPUID.

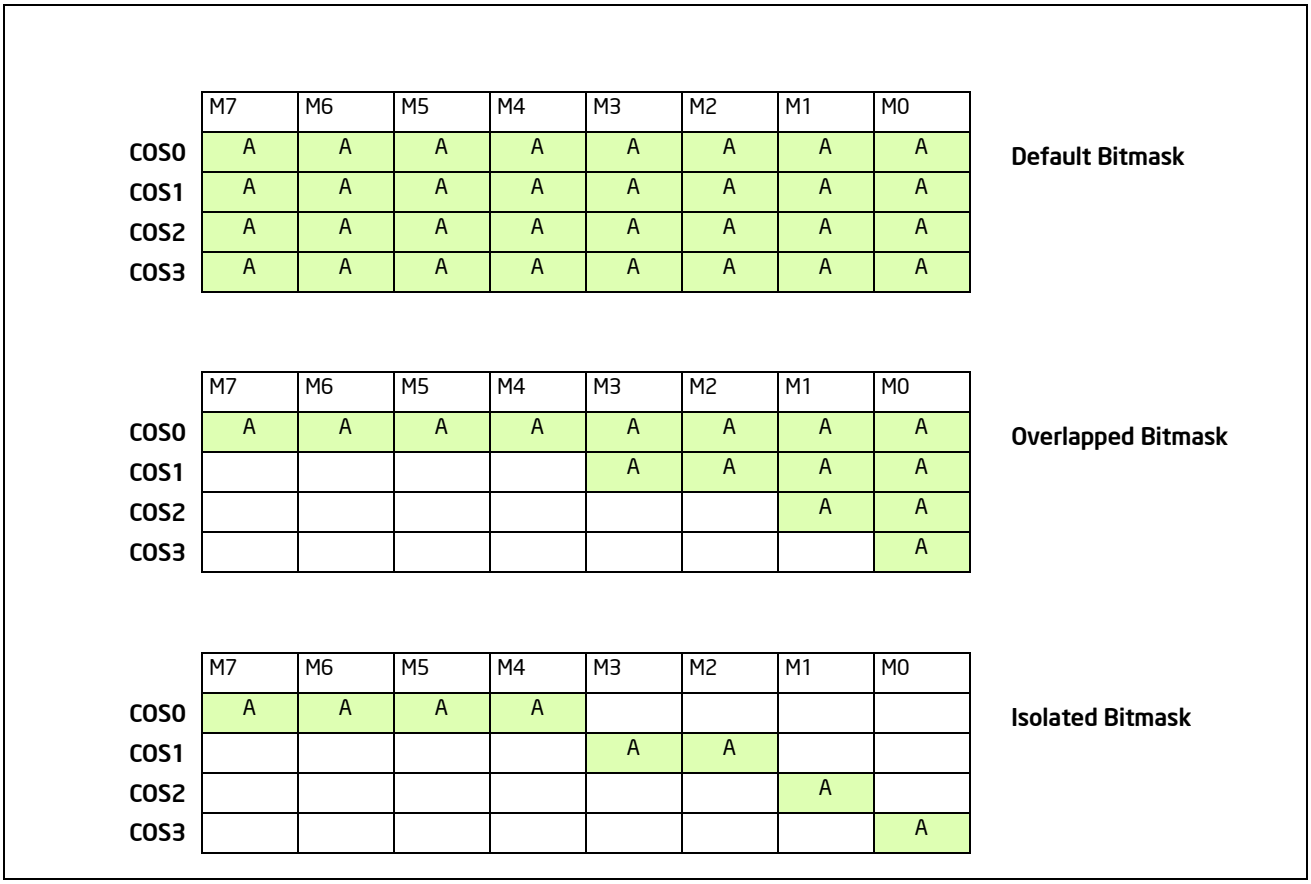

Figure 18-27. Examples of Cache Capacity Bitmasks

Sample cache capacity bitmasks for a bit length of 8 are shown in Figure 18-27. Please note that all (and only) contiguous '1' combinations are allowed (e.g., FFFFH, 0FF0H, 003CH, etc.). Attempts to program a value without contiguous '1's (including zero) will result in a general protection fault (#GP(0)). It is generally expected that in way-based implementations, one capacity mask bit corresponds to some number of ways in cache, but the specific mapping is implementation-dependent. In all cases, a mask bit set to '1' specifies that a particular Class of Service can allocate into the cache subset represented by that bit. A value of '0' in a mask bit specifies that a Class of

Service cannot allocate into the given cache subset. In general, allocating more cache to a given application is usually beneficial to its performance.

Figure 18-27 also shows three examples of sets of Cache Capacity Bitmasks. For simplicity these are represented as 8-bit vectors, though this may vary depending on the implementation and how the mask is mapped to the available cache capacity. The first example shows the default case where all 4 Classes of Service (the total number of COS are implementation-dependent) have full access to the cache. The second case shows an overlapped case, which would allow some lower-priority threads share cache space with the highest priority threads. The third case shows various non-overlapped partitioning schemes. As a matter of software policy for extensibility COS0 should typically be considered and configured as the highest priority COS, followed by COS1, and so on, though there is no hardware restriction enforcing this mapping. When the system boots all threads are initialized to COS0, which has full access to the cache by default.

Though the representation of the CBMs looks similar to a way-based mapping they are independent of any specific enforcement implementation (e.g., way partitioning.) Rather, this is a convenient manner to represent capacity, overlap, and isolation of cache space. For example, executing a POPCNT instruction (population count of set bits) on the capacity bitmask can provide the fraction of cache space that a class of service can allocate into. In addition to the fraction, the exact location of the bits also shows whether the class of service overlaps with other classes of service or is entirely isolated in terms of cache space used.

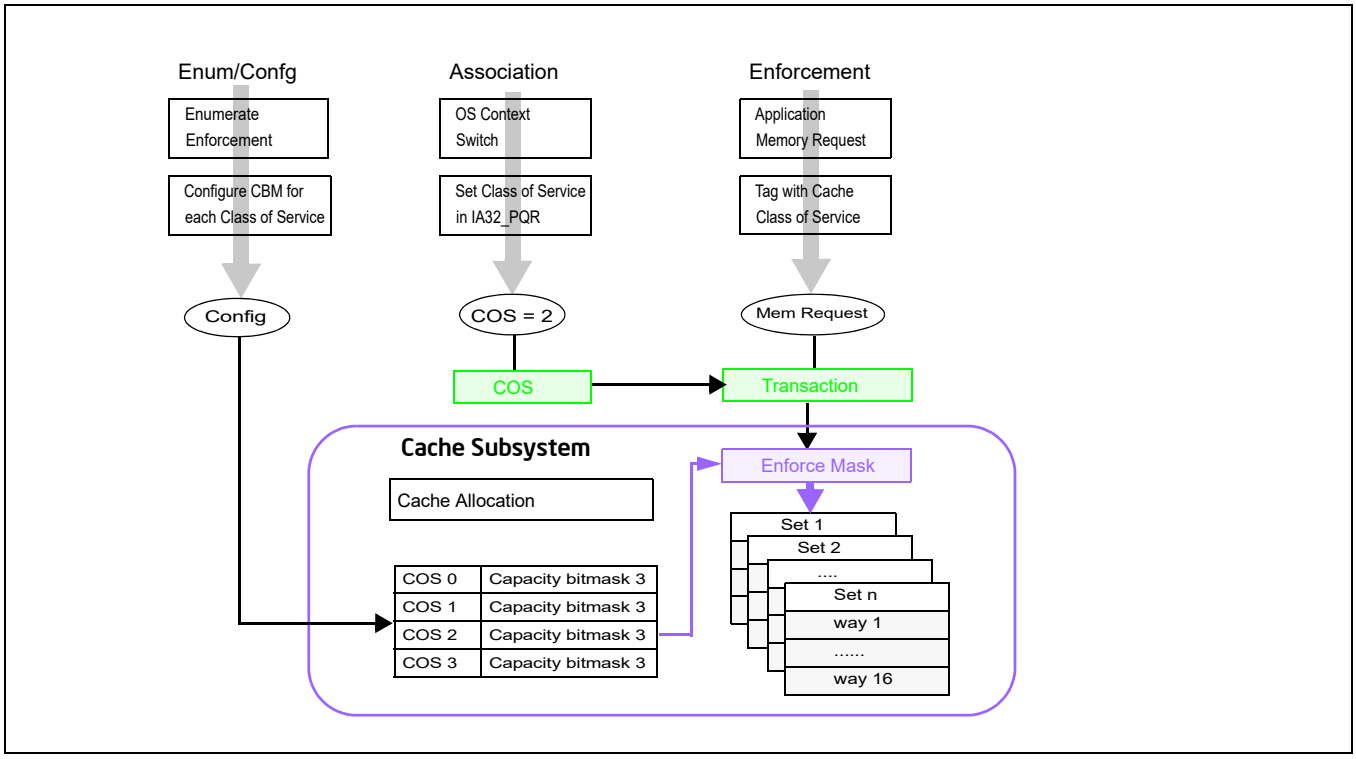

Figure 18-28. Class of Service and Cache Capacity Bitmasks

Figure 18-28 shows how the Cache Capacity Bitmasks and the per-logical-processor Class of Service are logically used to enable Cache Allocation Technology. All (and only) contiguous 1's in the CBM are permitted. The length of a CBM may vary from resource to resource or between processor generations and can be enumerated using CPUID. From the available mask set and based on the goals of the OS/VMM (shared or isolated cache, etc.) bitmasks are selected and associated with different classes of service. For the available Classes of Service the associated CBMs can be programmed via the global set of CAT configuration registers (in the case of L3 CAT, via the IA32_L3_MASK_n MSRs, where "n" is the Class of Service, starting from zero). In all architectural implementations supporting CPUID it is possible to change the CBMs dynamically, during program execution, unless stated otherwise by Intel.

The currently running application's Class of Service is communicated to the hardware through the per-logical-processor PQR MSR (IA32_PQR_ASSOC MSR). When the OS schedules an application thread on a logical processor,

the application thread is associated with a specific COS (i.e., the corresponding COS in the PQR) and all requests to the CAT-capable resource from that logical processor are tagged with that COS (in other words, the application thread is configured to belong to a specific COS). The cache subsystem uses this tagged request information to enforce QoS. The capacity bitmask may be mapped into a way bitmask (or a similar enforcement entity based on the implementation) at the cache before it is applied to the allocation policy. For example, the capacity bitmask can be an 8-bit mask and the enforcement may be accomplished using a 16-way bitmask for a cache enforcement implementation based on way partitioning.

The following sections describe extensions of CAT such as Code and Data Prioritization (CDP), followed by details on specific features such as L3 CAT, L3 CDP, L2 CAT, and L2 CDP. Depending on the specific processor a mix of features may be supported, and CPUID provides enumeration capabilities to enable software to dynamically detect the set of supported features.

18.19.3 Code and Data Prioritization (CDP) Technology

Code and Data Prioritization Technology is an extension of CAT. CDP enables isolation and separate prioritization of code and data fetches to the L2 or L3 cache in a software configurable manner, depending on hardware support, which can enable workload prioritization and tuning of cache capacity to the characteristics of the workload. CDP extends Cache Allocation Technology (CAT) by providing separate code and data masks per Class of Service (COS). Support for the L2 CDP feature and the L3 CDP features are separately enumerated (via CPUID) and separately controlled (via remapping the L2 CAT MSRs or L3 CAT MSRs respectively). Section 18.19.6.3 and Section 18.19.7 provide details on enumerating, controlling, and enabling L3 and L2 CDP respectively, while this section provides a general overview.

The L3 CDP feature was first introduced on the Intel Xeon E5 v4 family of server processors, as an extension to L3 CAT. The L2 CDP feature is first introduced on future Intel Atom family processors, as an extension to L2 CAT.

By default, CDP is disabled on the processor. If the CAT MSRs are used without enabling CDP, the processor operates in a traditional CAT-only mode. When CDP is enabled,

- the CAT mask MSRs are re-mapped into interleaved pairs of mask MSRs for data or code fetches (see Figure 18-29),
- the range of COS for CAT is re-indexed, with the lower-half of the COS range available for CDP.

Using the CDP feature, virtual isolation between code and data can be configured on the L2 or L3 cache if desired, similar to how some processor cache levels provide separate L1 data and L1 instruction caches.

Like the CAT feature, CDP may be dynamically configured by privileged software at any point during normal system operation, including dynamically enabling or disabling the feature provided that certain software configuration requirements are met (see Section 18.19.5).

An example of the operating mode of CDP is shown in Figure 18-29. Shown at the top are traditional CAT usage models where capacity masks map 1:1 with a COS number to enable control over the cache space which a given COS (and thus applications, threads or VMs) may occupy. Shown at the bottom are example mask configurations where CDP is enabled, and each COS number maps 1:2 to two masks, one for code and one for data. This enables code and data to be either overlapped or isolated to varying degrees either globally or on a per-COS basis, depending on application and system needs.

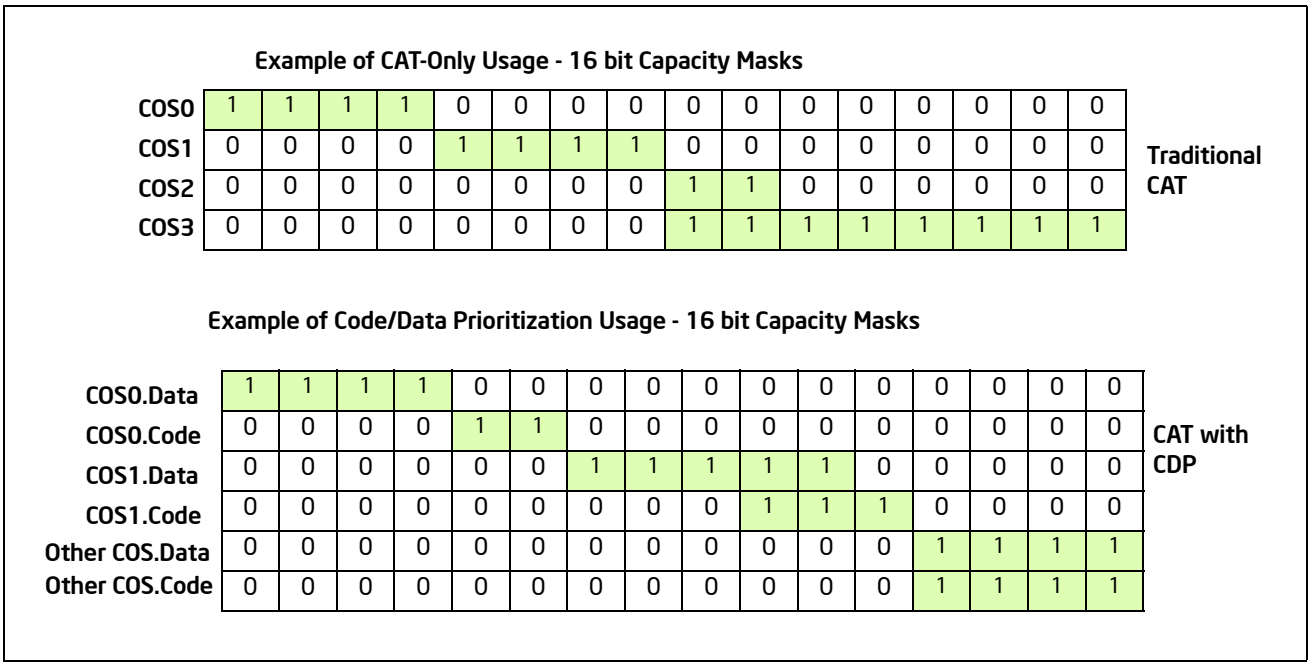

Figure 18-29. Code and Data Capacity Bitmasks of CDP

When CDP is enabled, the existing mask space for CAT-only operation is split. As an example if the system supports 16 CAT-only COS, when CDP is enabled the same MSR interfaces are used, however half of the masks correspond to code, half correspond to data, and the effective number of COS is reduced by half. Code/Data masks are defined per-COS and interleaved in the MSR space as described in subsequent sections.

In cases where CPUID exposes a non-even number of supported Classes of Service for the CAT or CDP features, software using CDP should use the lower matched pairs of code/data masks, and any upper unpaired masks should not be used. As an example, if CPUID exposes 5 CLOS, when CDP is enabled then two code/data pairs are available (masks 0/1 for CLOS[0] data/code and masks 2/3 for CLOS[1] data/code), however the upper un-paired mask should not be used (mask 4 in this case) or undefined behavior may result.

18.19.4 Enabling Cache Allocation Technology Usage Flow

Figure 18-30 illustrates the key steps for OS/VMM to detect support of Cache Allocation Technology and enable priority-based resource allocation for a CAT-capable resource.

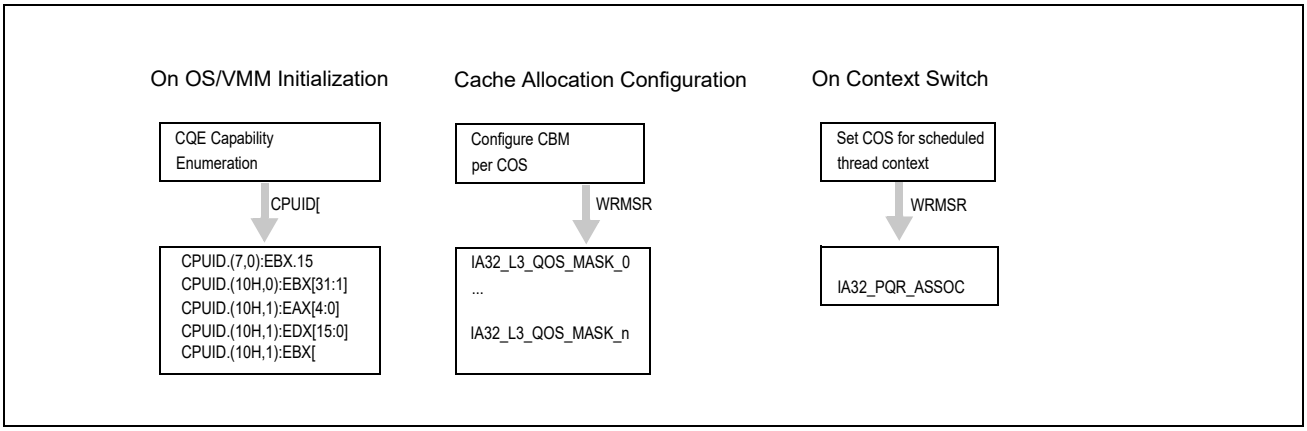

Figure 18-30. Cache Allocation Technology Usage Flow

Enumeration and configuration of L2 CAT is similar to L3 CAT, however CPUID details and MSR addresses differ. Common CLOS are used across the features.

18.19.4.1 Enumeration and Detection Support of Cache Allocation Technology

Software can query processor support of CAT capabilities by executing CPUID instruction with EAX = 07H, ECX = 0H as input. If CPUID.(EAX=07H, ECX=0):EBX.PQE[bit 15] reports 1, the processor supports software control over shared processor resources. Software must use CPUID leaf 10H to enumerate additional details of available resource types, classes of services and capability bitmasks. The programming interfaces provided by Cache Allocation Technology include:

- CPUID leaf function 10H (Cache Allocation Technology Enumeration leaf) and its sub-functions provide information on available resource types, and CAT capability for each resource type (see Section 18.19.4.2).
- IA32_L3_MASK_n: A range of MSRs is provided for each resource type, each MSR within that range specifying a software-configured capacity bitmask for each class of service. For L3 with Cache Allocation support, the CBM is specified using one of the IA32_L3_QOS_MASK_n MSR, where 'n' corresponds to a number within the supported range of COS, i.e., the range between 0 and CPUID.(EAX=10H, ECX=ResID):EDX[15:0], inclusive. See Section 18.19.4.3 for details.
- IA32_L2_MASK_n: A range of MSRs is provided for L2 Cache Allocation Technology, enabling software control over the amount of L2 cache available for each CLOS. Similar to L3 CAT, a CBM is specified for each CLOS using the set of registers, IA32_L2_QOS_MASK_n MSR, where 'n' ranges from zero to the maximum CLOS number reported for L2 CAT in CPUID. See Section 18.19.4.3 for details.

  The L2 mask MSRs are scoped at the same level as the L2 cache (similarly, the L3 mask MSRs are scoped at the same level as the L3 cache). Software may determine which logical processors share an MSR (for instance local to a core, or shared across multiple cores) by performing a write to one of these MSRs and noting which logical threads observe the change. Example flows for a similar method to determine register scope are described in Section 16.5.2, “System Software Recommendation for Managing CMCI and Machine Check Resources”. Software may also use CPUID leaf 4 to determine the maximum number of logical processor IDs that may share a given level of the cache.
- IA32_PQR_ASSOC.CLOS: The IA32_PQR_ASSOC MSR provides a COS field that OS/VMM can use to assign a logical processor to an available COS. The set of COS are common across all allocation features, meaning that multiple features may be supported in the same processor without additional software COS management overhead at context swap time. See Section 18.19.4.4 for details.

18.19.4.2 Cache Allocation Technology: Resource Type and Capability Enumeration

CPUID leaf function 10H (Cache Allocation Technology Enumeration leaf) provides two or more sub-functions:

- CAT Enumeration leaf sub-function 0 enumerates available resource types that support allocation control, i.e., by executing CPUID with EAX=10H and ECX=0H. Each supported resource type is represented by a bit field in

CPUID.(EAX=10H, ECX=0):EBX[31:1]. The bit position of each set bit corresponds to a Resource ID (ResID), for instance ResID=1 is used to indicate L3 CAT support, and ResID=2 indicates L2 CAT support. The ResID is also the sub-leaf index that software must use to query details of the CAT capability of that resource type (see Figure 18-31).

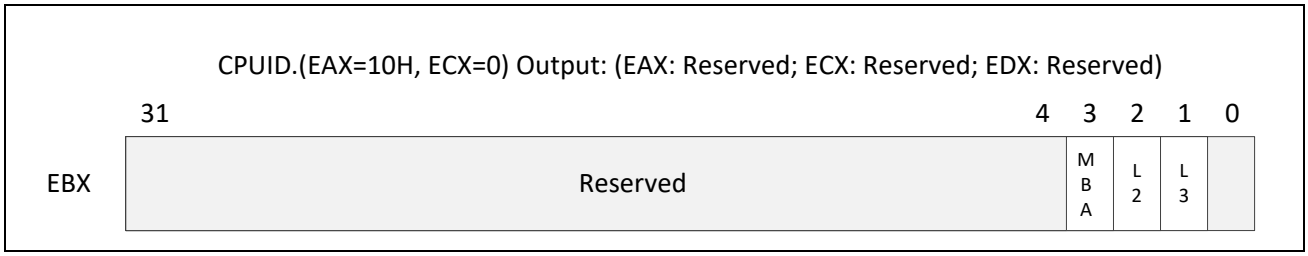

Figure 18-31. CPUID.(EAX=10H, ECX=0H) Available Resource Type Identification

— For ECX>0, EAX[4:0] reports the length of the capacity bitmask (ECX=1 or 2 for L3 CAT or L2 CAT respectively) using minus-one notation, e.g., a value of 15 corresponds to the capacity bitmask having length of 16 bits. Bits 31:5 of EAX are reserved.

- Sub-functions of CPUID.EAX=10H with a non-zero ECX input matching a supported ResID enumerate the specific enforcement details of the corresponding ResID. The capabilities enumerated include the length of the capacity bitmasks and the number of Classes of Service for a given ResID. Software should query the capability of each available ResID that supports CAT from a sub-leaf of leaf 10H using the sub-leaf index reported by the corresponding non-zero bit in CPUID.(EAX=10H, ECX=0):EBX[31:1] in order to obtain additional feature details.
- CAT capability for L3 is enumerated by CPUID.(EAX=10H, ECX=1H), see Figure 18-32. The specific CAT capabilities reported by CPUID.(EAX=10H, ECX=1) are:

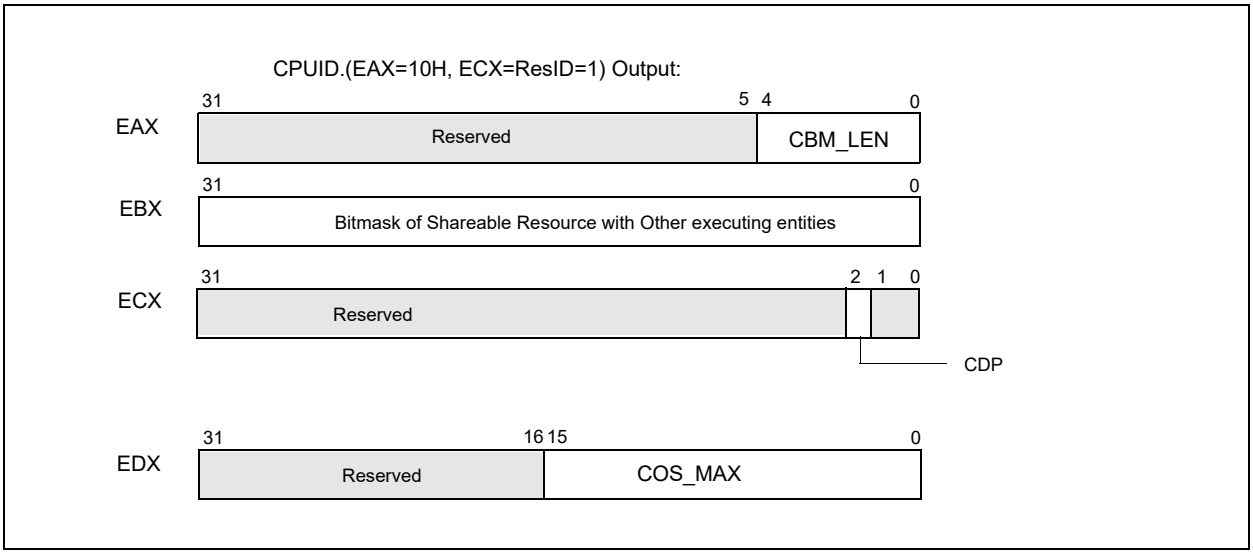

Figure 18-32. L3 Cache Allocation Technology and CDP Enumeration

— CPUID.(EAX=10H, ECX=ResID=1):EAX[4:0] reports the length of the capacity bitmask using minus-one notation, e.g., a value of 15 corresponds to the capability bitmask having length of 16 bits. Bits 31:5 of EAX are reserved.

— CPUID.(EAX=10H, ECX=1):EBX[31:0] reports a bit mask. Each set bit within the length of the CBM indicates the corresponding unit of the L3 allocation may be used by other entities in the platform (e.g., an

integrated graphics engine or hardware units outside the processor core and have direct access to L3). Each cleared bit within the length of the CBM indicates the corresponding allocation unit can be configured to implement a priority-based allocation scheme chosen by an OS/VMM without interference with other hardware agents in the system. Bits outside the length of the CBM are reserved.

— CPUID.(EAX=10H, ECX=1):ECX.CDP[bit 2]: If 1, indicates L3 Code and Data Prioritization Technology is supported (see Section 18.19.5). Other bits of CPUID.(EAX=10H, ECX=1):ECX are reserved.

— CPUID.(EAX=10H, ECX=1):EDX[15:0] reports the maximum COS supported for the resource (COS are zero-referenced, meaning a reported value of '15' would indicate 16 total supported COS). Bits 31:16 are reserved.

- CAT capability for L2 is enumerated by CPUID.(EAX=10H, ECX=2H), see Figure 18-33. The specific CAT capabilities reported by CPUID.(EAX=10H, ECX=2) are:

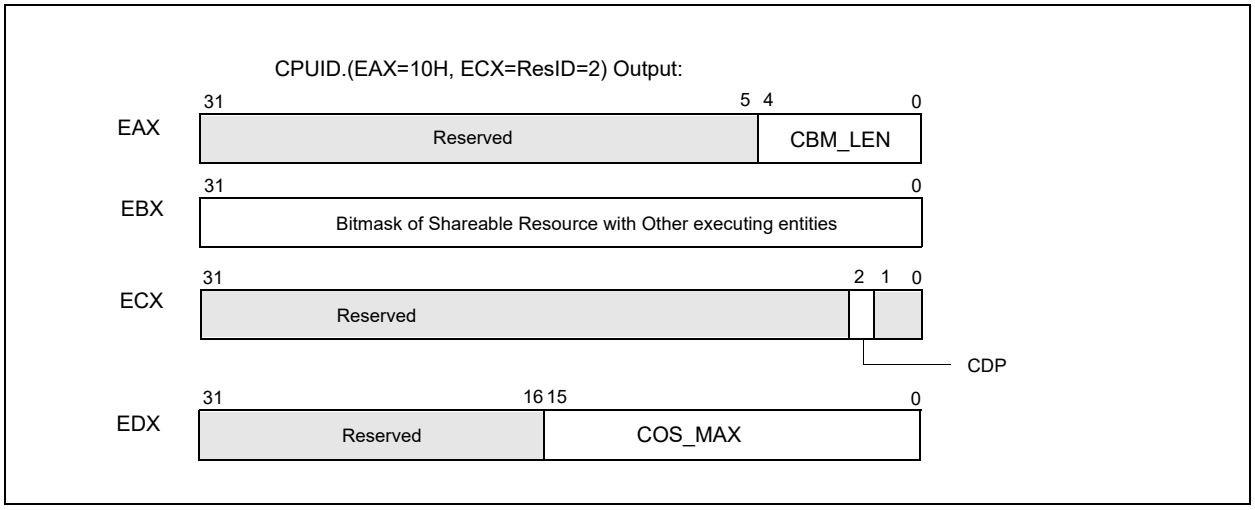

Figure 18-33. L2 Cache Allocation Technology

— CPUID.(EAX=10H, ECX=ResID=2):EAX[4:0] reports the length of the capacity bitmask using minus-one notation, e.g., a value of 15 corresponds to the capability bitmask having length of 16 bits. Bits 31:5 of EAX are reserved.

— CPUID.(EAX=10H, ECX=2):EBX[31:0] reports a bit mask. Each set bit within the length of the CBM indicates the corresponding unit of the L2 allocation may be used by other entities in the platform. Each cleared bit within the length of the CBM indicates the corresponding allocation unit can be configured to implement a priority-based allocation scheme chosen by an OS/VMM without interference with other hardware agents in the system. Bits outside the length of the CBM are reserved.

— CPUID.(EAX=10H, ECX=2):ECX.CDP[bit 2]: If 1, indicates L2 Code and Data Prioritization Technology is supported (see Section 17.19.6). Other bits of CPUID.(EAX=10H, ECX=2):ECX are reserved.

— CPUID.(EAX=10H, ECX=2):EDX[15:0] reports the maximum COS supported for the resource (COS are zero-referenced, meaning a reported value of '15' would indicate 16 total supported COS). Bits 31:16 are reserved.

A note on migration of Classes of Service (COS): Software should minimize migrations of COS across logical processors (across threads or cores), as a reduction in the performance of the Cache Allocation Technology feature may result if COS are migrated frequently. This is aligned with the industry-standard practice of minimizing unnecessary thread migrations across processor cores in order to avoid excessive time spent warming up processor caches after a migration. In general, for best performance, minimize thread migration and COS migration across processor logical threads and processor cores.

18.19.4.3 Cache Allocation Technology: Cache Mask Configuration

After determining the length of the capacity bitmasks (CBM) and number of COS supported using CPUID (see Section 18.19.4.2), each COS needs to be programmed with a CBM to dictate its available cache via a write to the corresponding IA32_resourceType_MASK_n register, where 'n' corresponds to a number within the supported range of COS, i.e., the range between 0 and CPUID.(EAX=10H, ECX=ResID):EDX[15:0], inclusive, and 'resourceType' corresponds to a specific resource as enumerated by the set bits of CPUID.(EAX=10H, ECX=0):EBX[31:1], for instance, ‘L2’ or ‘L3’ cache.

A hierarchy of MSRs is reserved for Cache Allocation Technology registers of the form IA32_resourceType_MASK_n:

- From 0C90H through 0D8FH (inclusive), providing support for multiple sub-ranges to support varying resource types. The first supported resourceType is 'L3', corresponding to the L3 cache in a platform. The MSRs range from 0C90H through 0D0FH (inclusive), enables support for up to 128 L3 CAT Classes of Service.

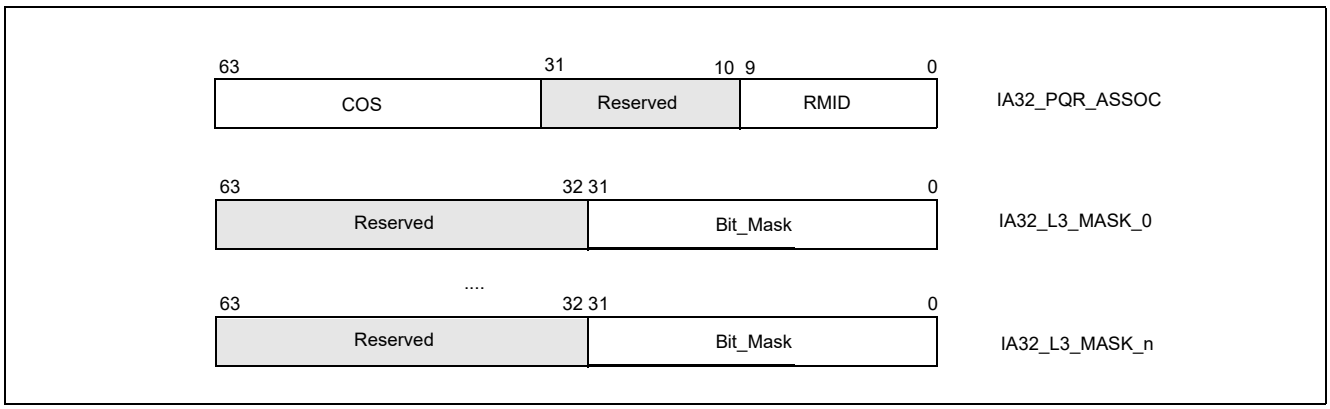

Figure 18-34. IA32_PQR_ASSOC, IA32_L3_MASK_n MSRs

- Within the same CAT range hierarchy, another set of registers is defined for resourceType 'L2', corresponding to the L2 cache in a platform, and MSRs IA32_L2_MASK_n are defined for n=[0,63] at addresses 0D10H through 0D4FH (inclusive).

Figure 18-34 and Figure 18-35 provide an overview of the relevant registers.

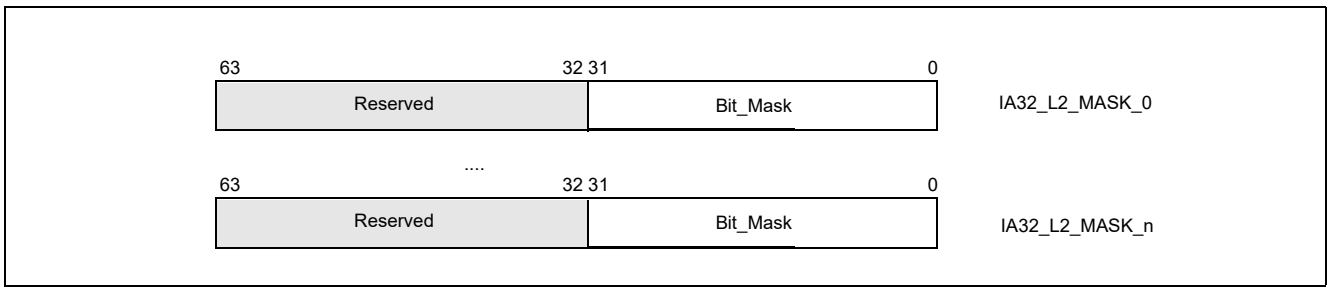

Figure 18-35. IA32_L2_MASK_n MSRs

All CAT configuration registers can be accessed using the standard RDMSR / WRMSR instructions.

Note that once L3 or L2 CAT masks are configured, threads can be grouped into Classes of Service (COS) using the IA32_PQR_ASSOC MSR as described in Chapter 18, “Class of Service to Cache Mask Association: Common Across Allocation Features”.

18.19.4.4 Class of Service to Cache Mask Association: Common Across Allocation Features

After configuring the available classes of service with the preferred set of capacity bitmasks, the OS/VMM can set the IA32_PQR_ASSOC.COS of a logical processor to the class of service with the desired CBM when a thread

context switch occurs. This allows the OS/VMM to indicate which class of service an executing thread/VM belongs within. Each logical processor contains an instance of the IA32_PQR_ASSOC register at MSR location 0C8FH, and Figure 18-34 shows the bit field layout for this register. Bits[63:32] contain the COS field for each logical processor.

Note that placing the RMID field within the same PQR register enables both RMID and CLOS to be swapped at context swap time for simultaneous use of monitoring and allocation features with a single register write for efficiency.

When CDP is enabled, Specifying a COS value in IA32_PQR_ASSOC.COS greater than MAX_COS_CDP =(CPUID.(EAX=10H, ECX=1):EDX[15:0] >> 1) will cause undefined performance impact to code and data fetches. In all cases, code and data masks for L2 and L3 CDP should be programmed with at least one bit set.

Note that if the IA32_PQR_ASSOC.COS is never written then the CAT capability defaults to using COS 0, which in turn is set to the default mask in IA32_L3_MASK_0 - which is all "1"s (on reset). This essentially disables the enforcement feature by default or for legacy operating systems and software.

See Section 18.19.7, "Introduction to Memory Bandwidth Allocation" for important COS programming considerations including maximum values when using CAT and CDP.

18.19.5 Code and Data Prioritization (CDP): Enumerating and Enabling L3 CDP Technology

L3 CDP is an extension of L3 CAT. The presence of the L3 CDP feature is enumerated via CPUID.(EAX=10H, ECX=1):ECX.CDP[bit 2] (see Figure 18-32). Most of the CPUID.(EAX=10H, ECX=1) sub-leaf data that applies to CAT also apply to CDP. However, CPUID.(EAX=10H, ECX=1):EDX.COS_MAX_CAT specifies the maximum COS applicable to CAT-only operation. For CDP operations, COS_MAX_CDP is equal to (CPUID.(EAX=10H, ECX=1):EDX.COS_MAX_CAT >>1).

If CPUID.(EAX=10H, ECX=1):ECX.CDP[bit 2] =1, the processor supports CDP and provides a new MSR IA32_L3_QOS_CFG at address 0C81H. The layout of IA32_L3_QOS_CFG is shown in Figure 18-36. The bit field definition of IA32_L3_QOS_CFG are:

- Bit 0: L3 CDP Enable. If set, enables CDP, maps CAT mask MSRs into pairs of Data Mask and Code Mask MSRs. The maximum allowed value to write into IA32_PQR_ASSOC.COS is COS_MAX_CDP.
- Bits 63:1: Reserved. Attempts to write to reserved bits result in a #GP(0).

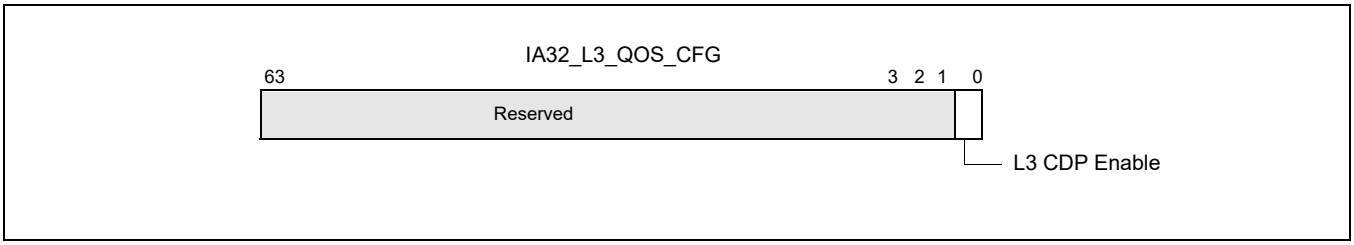

Figure 18-36. Layout of IA32_L3_QOS_CFG

IA32_L3_QOS_CFG default values are all 0s at RESET, the mask MSRs are all 1s. Hence, all logical processors are initialized in COS0 allocated with the entire L3 with CDP disabled, until software programs CAT and CDP. The scope of the IA32_L3_QOS_CFG MSR is defined to be the same scope as the L3 cache (e.g., typically per processor socket). Refer to Section 18.19.7 for software considerations while enabling or disabling L3 CDP.

18.19.5.1 Mapping Between L3 CDP Masks and CAT Masks

When CDP is enabled, the existing CAT mask MSR space is re-mapped to provide a code mask and a data mask per COS. The re-mapping is shown in Table 18-19.

Table 18-19. Re-indexing of COS Numbers and Mapping to CAT/CDP Mask MSRs

Mask MSR	CAT-only Operation	CDP Operation
IA32_L3_QOS_Mask_0	COS0	COS0.Data
IA32_L3_QOS_Mask_1	COS1	COS0.Code
IA32_L3_QOS_Mask_2	COS2	COS1.Data
IA32_L3_QOS_Mask_3	COS3	COS1.Code
IA32_L3_QOS_Mask_4	COS4	COS2.Data
IA32_L3_QOS_Mask_5	COS5	COS2.Code
….	….	….
IA32_L3_QOS_Mask_'2n'	COS'2n'	COS'n'.Data
IA32_L3_QOS_Mask_'2n+1'	COS'2n+1'	COS'n'.Code

One can derive the MSR address for the data mask or code mask for a given COS number 'n' by:

- data_mask_address (n) = base + (n <<1), where base is the address of IA32_L3_QOS_MASK_0.
- code_mask_address (n) = base + (n <<1) +1.

When CDP is enabled, each COS is mapped 1:2 with mask MSRs, with one mask enabling programmatic control over data fill location and one mask enabling control over code placement. A variety of overlapped and isolated mask configurations are possible (see the example in Figure 18-29).

Mask MSR field definitions remain the same. Capacity masks must be formed of contiguous set bits, with a length of 1 bit or longer and should not exceed the maximum mask length specified in CPUID. As examples, valid masks on a cache with max bitmask length of 16b (from CPUID) include 0xFFFF, 0xFF00, 0x00FF, 0x00F0, 0x0001, 0x0003, and so on. Maximum valid mask lengths are unchanged whether CDP is enabled or disabled, and writes of invalid mask values may lead to undefined behavior. Writes to reserved bits will generate #GP(0).

18.19.6 Code and Data Prioritization (CDP): Enumerating and Enabling L2 CDP Technology

L2 CDP is an extension of the L2 CAT feature. The presence of the L2 CDP feature is enumerated via CPUID.(EAX=10H, ECX=2):ECX.CDP[bit 2] (see Figure 17-33). Most of the CPUID.(EAX=10H, ECX=2) sub-leaf data that applies to CAT also apply to CDP. However, CPUID.(EAX=10H, ECX=2):EDX.COS_MAX_CAT specifies the maximum COS applicable to CAT-only operation. For CDP operations, COS_MAX_CDP is equal to (CPUID.(EAX=10H, ECX=2):EDX.COS_MAX_CAT >>1).

If CPUID.(EAX=10H, ECX=2):ECX.CDP[bit 2] =1, the processor supports L2 CDP and provides a new MSR IA32_L2_QOS_CFG at address 0C82H. The layout of IA32_L2_QOS_CFG is shown in Figure 18-37. The bit field definition of IA32_L2_QOS_CFG are:

- Bit 0: L2 CDP Enable. If set, enables CDP, maps CAT mask MSRs into pairs of Data Mask and Code Mask MSRs. The maximum allowed value to write into IA32_PQR_ASSOC.COS is COS_MAX_CDP.
- Bits 63:1: Reserved. Attempts to write to reserved bits result in a #GP(0).

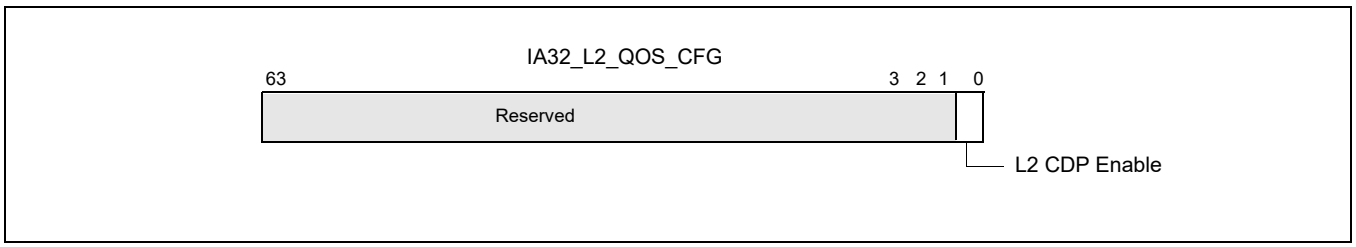

Figure 18-37. Layout of IA32_L2_QOS_CFG

IA32_L2_QOS_CFG default values are all 0s at RESET, and the mask MSRs are all 1s. Hence all logical processors are initialized in COS0 allocated with the entire L2 available and with CDP disabled, until software programs CAT and CDP. The IA32_L2_QOS_CFG MSR is defined at the same scope as the L2 cache, typically at the module level for Intel Atom processors for instance. In processors with multiple modules present it is recommended to program the IA32_L2_QOS_CFG MSR consistently across all modules for simplicity.

18.19.6.1 Mapping Between L2 CDP Masks and L2 CAT Masks

When CDP is enabled, the existing CAT mask MSR space is re-mapped to provide a code mask and a data mask per COS. This remapping is the same as the remapping shown in Table 17-19 for L3 CDP, but for the L2 MSR block (IA32_L2_QOS_MASK_n) instead of the L3 MSR block (IA32_L3_QOS_MASK_n). The same code / data mask mapping algorithm applies to remapping the MSR block between code and data masks.

As with L3 CDP, when L2 CDP is enabled, each COS is mapped 1:2 with mask MSRs, with one mask enabling programmatic control over data fill location and one mask enabling control over code placement. A variety of overlapped and isolated mask configurations are possible (see the example in Figure 18-29).

Mask MSR field definitions for L2 CDP remain the same as for L2 CAT. Capacity masks must be formed of contiguous set bits, with a length of 1 bit or longer and should not exceed the maximum mask length specified in CPUID. As examples, valid masks on a cache with max bitmask length of 16b (from CPUID) include 0xFFFF, 0xFF00, 0x00FF, 0x00F0, 0x0001, 0x0003, and so on. Maximum valid mask lengths are unchanged whether CDP is enabled or disabled, and writes of invalid mask values may lead to undefined behavior. Writes to reserved bits will generate #GP(0).

18.19.6.2 Common L2 and L3 CDP Programming Considerations

Before enabling or disabling L2 or L3 CDP, software should write all 1's to all of the corresponding CAT/CDP masks to ensure proper behavior (e.g., the IA32_L3_QOS_Mask_n set of MSRs for the L3 CAT feature). When enabling CDP, software should also ensure that only COS number which are valid in CDP operation is used, otherwise undefined behavior may result. For instance in a case with 16 CAT COS, since COS are reduced by half when CDP is enabled, software should ensure that only COS 0-7 are in use before enabling CDP (along with writing 1's to all mask bits before enabling or disabling CDP).

Software should also account for the fact that mask interpretations change when CDP is enabled or disabled, meaning for instance that a CAT mask for a given COS may become a code mask for a different Class of Service when CDP is enabled. In order to simplify this behavior and prevent unintended remapping software should consider resetting all threads to COS[0] before enabling or disabling CDP.

18.19.6.3 Cache Allocation Technology Dynamic Configuration

All Resource Director Technology (RDT) interfaces including the IA32_PQR_ASSOC MSR, CAT/CDP masks, MBA delay values and CQM/MBM registers are accessible and modifiable at any time during execution using RDMSR/WRMSR unless otherwise noted. When writing to these MSRs a #GP(0) will be generated if any of the following conditions occur:

- A reserved bit is modified,
- Accessing a QOS mask register outside the supported COS (the max COS number is specified in CPUID.(EAX=10H, ECX=ResID):EDX[15:0]), or
- Writing a COS greater than the supported maximum (specified as the maximum value of CPUID.(EAX=10H, ECX=ResID):EDX[15:0] for all valid ResID values) is written to the IA32_PQR_ASSOC.CLOS field.

When CDP is enabled, specifying a COS value in IA32_PQR_ASSOC.COS outside of the lower half of the COS space will cause undefined performance impact to code and data fetches due to MSR space re-indexing into code/data masks when CDP is enabled.

When reading the IA32_PQR_ASSOC register the currently programmed COS on the core will be returned.

When reading an IA32_*resourceType*_MASK_*n* register the current capacity bit mask for COS 'n' will be returned.

As noted previously, software should minimize migrations of COS across logical processors (across threads or cores), as a reduction in the accuracy of the Cache Allocation feature may result if COS are migrated frequently.

This is aligned with the industry standard practice of minimizing unnecessary thread migrations across processor cores in order to avoid excessive time spent warming up processor caches after a migration. In general, for best performance, minimize thread migration and COS migration across processor logical threads and processor cores.

18.19.6.4 Cache Allocation Technology Operation With Power Saving Features

Note that the Cache Allocation Technology feature cannot be used to enforce cache coherency, and that some advanced power management features such as C-states which may shrink or power off various caches within the system may interfere with CAT hints - in such cases the CAT bitmasks are ignored and the other features take precedence. If the highest possible level of CAT differentiation or determinism is required, disable any power-saving features which shrink the caches or power off caches. The details of the power management interfaces are typically implementation-specific, but can be found at *Intel® 64 and IA-32 Architectures Software Developer's Manual, Volume 3C*.

If software requires differentiation between threads but not absolute determinism then in many cases it is possible to leave power-saving cache shrink features enabled, which can provide substantial power savings and increase battery life in mobile platforms. In such cases when the caches are powered off (e.g., package C-states) the entire cache of a portion thereof may be powered off. Upon resuming an active state any new incoming data to the cache will be filled subject to the cache capacity bitmasks. Any data in the cache prior to the cache shrink or power off may have been flushed to memory during the process of entering the idle state, however, and is not guaranteed to remain in the cache. If differentiation between threads is the goal of system software then this model allows substantial power savings while continuing to deliver performance differentiation. If system software needs optimal determinism then power saving modes which flush portions of the caches and power them off should be disabled.

NOTE

IA32_PQR_ASSOC is saved and restored across C6 entry/exit. Similarly, the mask register contents are saved across package C-state entry/exit and are not lost.

18.19.6.5 Cache Allocation Technology Operation with Other Operating Modes

The states in IA32_PQR_ASSOC and mask registers are unmodified across an SMI delivery. Thus, the execution of SMM handler code can interact with the Cache Allocation Technology resource and manifest some degree of non-determinism to the non-SMM software stack. An SMM handler may also perform certain system-level or power management practices that affect CAT operation.

It is possible for an SMM handler to minimize the impact on data determinism in the cache by reserving a COS with a dedicated partition in the cache. Such an SMM handler can switch to the dedicated COS immediately upon entering SMM, and switching back to the previously running COS upon exit.

18.19.6.6 Associating Threads with CAT/CDP Classes of Service

Threads are associated with Classes of Service (CLOS) via the per-logical-processor IA32_PQR_ASSOC MSR. The same COS concept applies to both CAT and CDP (for instance, COS[5] means the same thing whether CAT or CDP is in use, and the COS has associated resource usage constraint attributes including cache capacity masks). The mapping of COS to mask MSRs does change when CDP is enabled, according to the following guidelines:

- In CAT-only Mode - one set of bitmasks in one mask MSR control both code and data.
  - Each COS number map 1:1 with a capacity mask on the applicable resource (e.g., L3 cache).
- When CDP is enabled,
  - Two mask sets exist for each COS number, one for code, one for data.
  - Masks for code/data are interleaved in the MSR address space (see Table 18-19).

18.19.7 Introduction to Memory Bandwidth Allocation

The Memory Bandwidth Allocation (MBA) feature provides indirect and approximate control over memory bandwidth available per-core, and was introduced on the Intel Xeon Scalable Processor Family. This feature provides a method to control applications which may be over-utilizing bandwidth relative to their priority in environments such as the data-center.

The MBA feature uses existing constructs from the Resource Director Technology (RDT) feature set including Classes of Service (CLOS). A given CLOS used for L3 CAT for instance means the same thing as a CLOS used for MBA. Infrastructure such as the MSR used to associate a thread with a CLOS (the IA32_PQR_ASSOC_MSR) and some elements of the CPUID enumeration (such as CPUID leaf 10H) are shared.

The high-level implementation of Memory Bandwidth Allocation is shown in Figure 18-38.

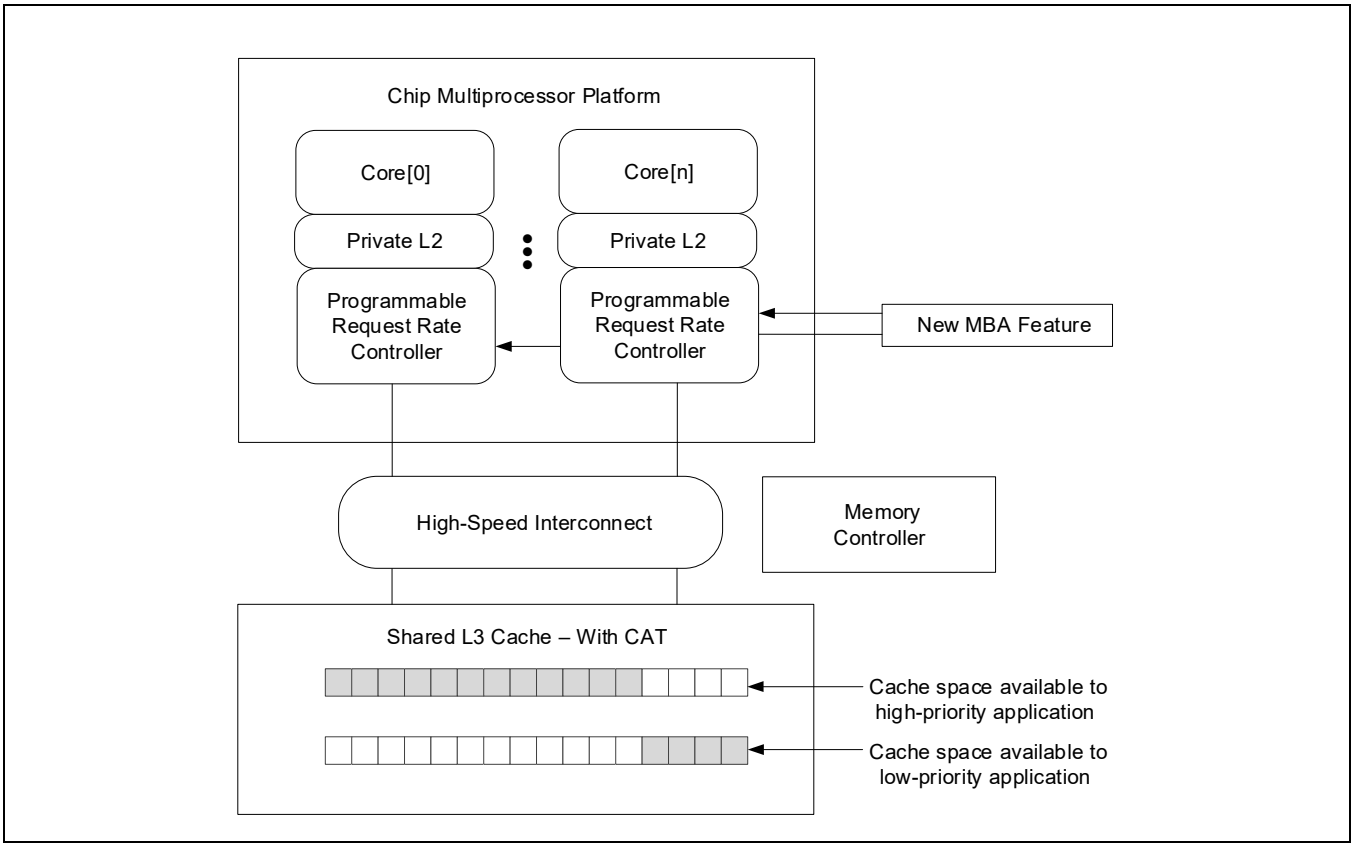

Figure 18-38. A High-Level Overview of the MBA Feature

As shown in Figure 18-38, the MBA feature introduces a programmable request rate controller between the cores and the high-speed interconnect, enabling indirect control over memory bandwidth for cores over-utilizing bandwidth relative to their priority. For instance, high-priority cores may be run un-throttled, but lower priority cores generating an excessive amount of traffic may be throttled to enable more bandwidth availability for the high-priority cores.

Since MBA uses a programmable rate controller between the cores and the interconnect, higher-level shared caches and memory controller, bandwidth to these caches may also be reduced, so care should be taken to throttle only bandwidth-intense applications which do not use the off-core caches effectively.

The throttling values exposed by MBA are approximate, and are calibrated to specific traffic patterns. As work-load characteristics vary, the throttling values provided may affect each workload differently. In cases where precise control is needed, the Memory Bandwidth Monitoring (MBM) feature can be used as input to a software controller which makes decisions about the MBA throttling level to apply.

Enumeration and configuration details are discussed below followed by usage model considerations.

18.19.7.1 Memory Bandwidth Allocation Enumeration

Similar to other RDT features, enumeration of the presence and details of the MBA feature is provided via a sub-leaf of the CPUID instruction.

Key components of the enumeration are as follows.

- Support for the MBA feature on the processor, and if MBA is supported, the following details:
  - — Number of supported Classes of Service (CLOS) for the processor.
  - — The maximum MBA delay value supported (which also implicitly provides a definition of the granularity).
  - — An indication of whether the delay values which can be programmed are linearly spaced or not.

The presence of any of the RDT features which enable control over shared platform resources is enumerated by executing CPUID instruction with EAX = 07H, ECX = 0H as input. If CPUID.(EAX=07H, ECX=0):EBX.PQE[bit 15] reports 1, the processor supports software control over shared processor resources. Software may then use CPUID leaf 10H to enumerate additional details on the specific controls provided.

Through CPUID leaf 10H software may determine whether MBA is supported on the platform. Specifically, as shown in Figure 17-31, bit 3 of the EBX register indicates whether MBA is supported on the processor, and the bit position (3) constitutes a Resource ID (ResID) which allows enumeration of MBA details. For instance, if bit 3 is supported this implies the presence of CPUID.10H.[ResID=3] as shown in Figure 18-39 which provides the following details.

- CPUID.(EAX=10H, ECX=ResID=3):EAX[11:0] reports the maximum MBA throttling value supported, minus one. For instance, a value of 89 indicates that a maximum throttling value of 90 is supported. Additionally, in cases where a linear interface (see below) is supported then one hundred minus the maximum throttling value indicates the granularity, 10% in this example.
- CPUID.(EAX=10H, ECX=ResID=3):EBX is reserved.
- CPUID.(EAX=10H, ECX=ResID=3):ECX[2] reports whether the response of the delay values is linear (see text).
- CPUID.(EAX=10H, ECX=ResID=3):EDX[15:0] reports the number of Classes of Service (CLOS) supported for the feature (minus one). For instance, a reported value of 15 implies a maximum of 16 supported MBA CLOS.

The number of CLOS supported for the MBA feature may or may not align with other resources such as L3 CAT. In cases where the RDT features support different numbers of CLOS the lowest numerical CLOS support the common set of features, while higher CLOS may support a subset. For instance, if L3 CAT supports 8 CLOS while MBA supports 4 CLOS, all 8 CLOS would have L3 CAT masks available for cache control, but the upper 4 CLOS would not offer MBA support. In this case the upper 4 CLOS would not be subject to any throttling control. Software can manage supported resources / CLOS in order to either have consistent capabilities across CLOS by using the common subset or enable more flexibility by selectively applying resource control where needed based on careful CLOS and thread mapping. In all cases, CLOS[0] supports all RDT resource control features present on the platform.

Discussion on the interpretation and usage of the MBA delay values is provided in Section 18.19.7.2 on MBA configuration.

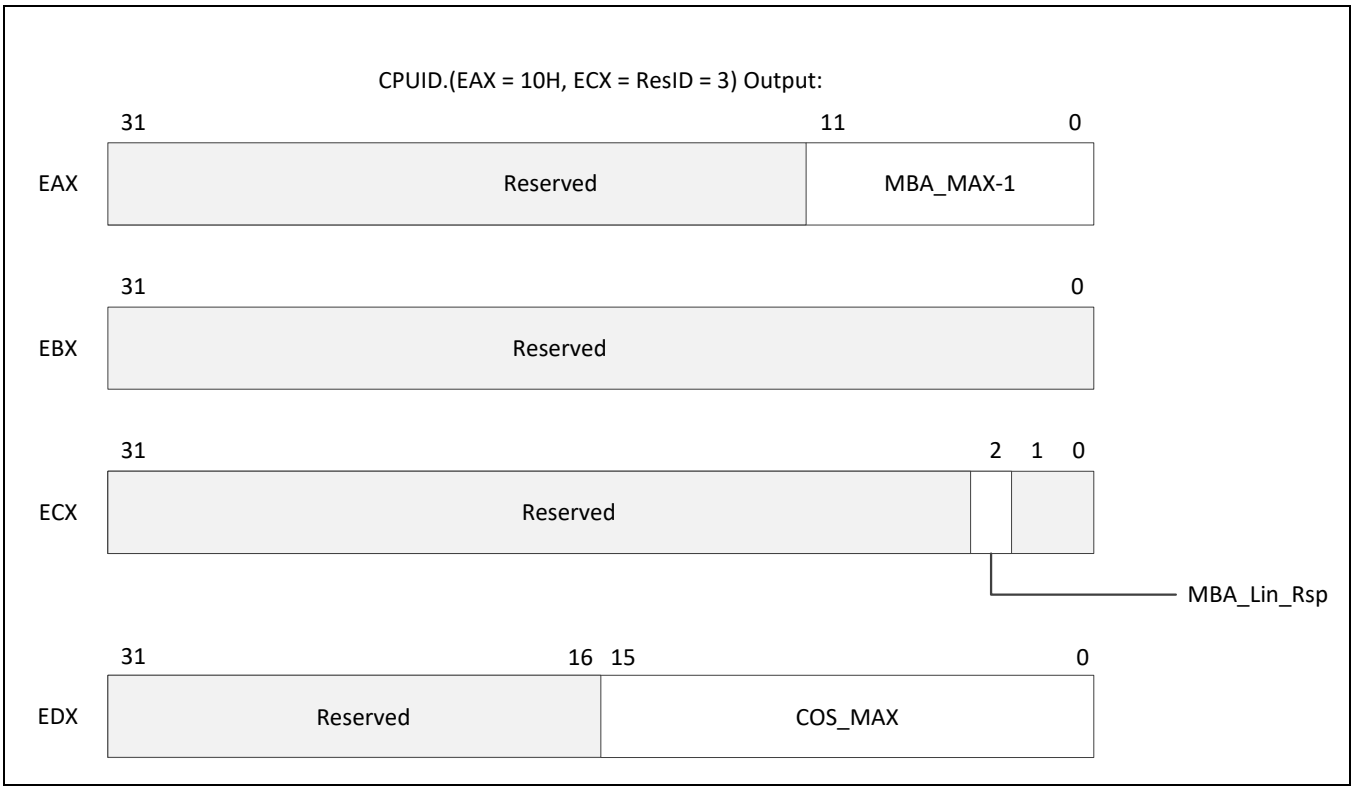

Figure 18-39. CPUID.(EAX=10H, ECX=3H) MBA Feature Details Identification

18.19.7.2 Memory Bandwidth Allocation Configuration

The configuration of MBA takes consists of two processes once enumeration is complete.

- Association of threads to Classes of Service (CLOS) - accomplished in a common fashion across RDT features as described in Section 18.19.7.1 via the IA32_PQR_ASSOC MSR. As with features such as L3 CAT, software may update the CLOS field of the PQR MSR at context swap time in order to maintain the proper association of software threads to Classes of Service on the hardware. While logical processors may each be associated with independent CLOS, see Section 18.19.7.3 for important usage model considerations (initial versions of the MBA feature select the maximum delay value across threads).
- Configuration of the per-CLOS delay values, accomplished via the IA32_L2_QoS_Ext_BW_Thrtl_n MSR set shown in Table 18-20.

The MBA delay values which may be programmed range from zero (implying zero delay, and full bandwidth available) to the maximum (MBA_MAX) specified in CPUID as discussed in Section 18.19.7.1. The throttling values are approximate and do not sum to 100% across CLOS, rather they should be viewed as a maximum bandwidth "cap" per-CLOS.

Software may select an MBA delay value then write the value into one or more of the IA32_L2_QoS_Ext_BW_Thrtl_n MSRs to update the delay values applied for a specific CLOS. As shown in Table 18-20 the base address of the MSRs is at D50H, and the range corresponds to the maximum supported CLOS from CPUID.(EAX=10H, ECX=ResID=1):EDX[15:0] as described in Section 18.19.7.1. For instance, if 16 CLOS are supported then the valid MSR range will extend from D50H through D5F inclusive.

Table 18-20. MBA Delay Value MSRs

Delay Value MSR	Address
IA32_L2_QoS_Ext_BW_Thrtl_0	D50H
IA32_L2_QoS_Ext_BW_Thrtl_1	D51H
IA32_L2_QoS_Ext_BW_Thrtl_2	D52H
….	….
IA32_L2_QoS_Ext_BW_Thrtl_'COS_MAX'	D50H + COS_MAX from CPUID.10H.3

The definition for the MBA delay value MSRs is provided in Figure 17.39. The lower 16 bits are used for MBA delay values, and values from zero to the maximum from the CPUID MBA_MAX-1 value are supported. Values outside this range will generate #GP(0).

If linear input throttling values are indicated by CPUID.(EAX=10H, ECX=ResID=3):ECX[bit 2] then values from zero through the MBA_MAX field from CPUID.(EAX=10H, ECX=ResID=3):EAX[11:0] are supported as inputs. In the linear mode the input precision is defined as 100-(MBA_MAX). For instance, if the MBA_MAX value is 90, the input precision is 10%. Values not an even multiple of the precision (e.g., 12%) will be rounded down (e.g., to 10% delay applied).

- If linear values are not supported (CPUID.(EAX=10H, ECX=ResID=3):ECX[bit 2] = 0) then input delay values are powers-of-two from zero to the MBA_MAX value from CPUID. In this case any values not a power of two will be rounded down the next nearest power of two.

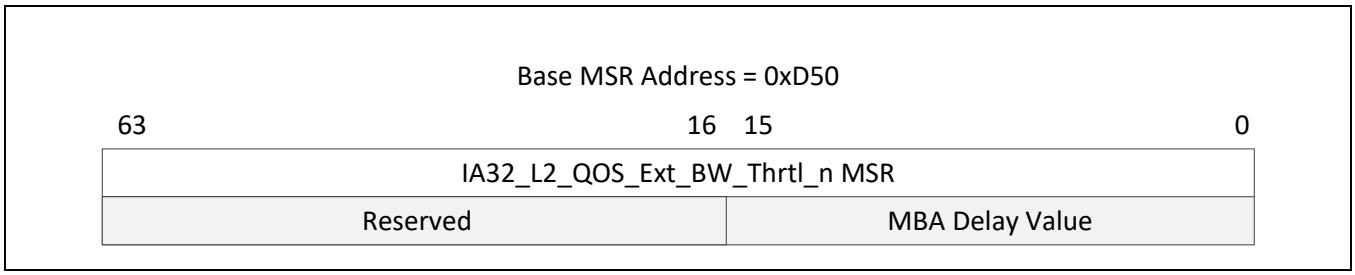

Figure 18-40. IA32_L2_QoS_Ext_BW_Thrtl_n MSR Definition

Note that the throttling values provided to software are calibrated through specific traffic patterns, however as workload characteristics may vary the response precision and linearity of the delay values will vary across products, and should be treated as approximate values only.

18.19.7.3 Memory Bandwidth Allocation Usage Considerations

As the memory bandwidth control that MBA provides is indirect and approximate, using the feature with a closed-loop controller to also monitor memory bandwidth and how effectively the applications use the cache (via the Cache Monitoring Technology feature) may provide additional value. This approach also allows administrators to provide a band-width target or set-point which a controller could use to guide MBA throttling values applied, and this allows bandwidth control independent of the execution characteristics of the application.

As control is provided per processor core (the max of the delay values of the per-thread CLOS applied to the core) care should be taking in scheduling threads so as to not inadvertently place a high-priority thread (with zero intended MBA throttling) next to a low-priority thread (with MBA throttling intended), which would lead to inadver-tent throttling of the high-priority thread.

CHAPTER 19
LAST BRANCH RECORDS

NOTE

This chapter defines a last-branch recording (LBR) facility that is architectural and part of the Intel 64 architecture. This facility is an enhancement of but distinct from earlier LBR facilities that were not architectural. Those earlier facilities are documented in Chapter 18.

Support of the architectural LBR feature in a logical processor is reported in CPUID.(EAX=07H, ECX=0):EDX[19]=1. When the architectural LBR feature is supported, capability details like the number of LBR records that are available is indicated in CPUID.(EAX=1CH, ECX=0):EAX[7:0]. The number of LBR records available varies across processor generations, so software is expected to query the CPUID.(EAX=1CH, ECX=0):EAX[7:0] reported value and only access the available LBR records.

Last Branch Records (LBRs) enable recording of software path history by logging taken branches and other control flow transfers within processor registers. Each LBR record or entry is comprised of three MSRs:

- IA32_LBR_x_FROM_IP — Holds the source IP of the operation.
- IA32_LBR_x_TO_IP — Holds the destination IP of the operation.
- IA32_LBR_x_INFO — Holds metadata for the operation, including mispredict, TSX, and elapsed cycle time information.

LBR records are stored in age order. The most recent LBR entry is stored in IA32_LBR_0_*, the next youngest in IA32_LBR_1_*, and so on. When an operation to be recorded completes (retires) with LBRs enabled (IA32_LBR_CTL.LBREn=1), older LBR entries are shifted in the LBR array by one entry, then a record of the new operation is written into entry 0. See Section 19.1.1 for the list of recorded operations.

The number of LBR entries available for recording operations is dictated by the value in IA32_LBR_DEPTH.DEPTH. By default, the DEPTH value matches the maximum number of LBRs supported by the processor, but software may opt to use fewer in order to achieve reduced context switch latency.

In addition to the LBRs, there is a single Last Event Record (LER). It records the last taken branch preceding the last exception, hardware interrupt, or software interrupt. Like LBRs, the LER is comprised of three MSRs (IA32_LER_FROM_IP, IA32_LER_TO_IP, IA32_LER_INFO), and is subject to the same dependencies on enabling and filtering.

Which operations are recorded in LBRs depends upon a series of factors:

- Branch Type Filtering — Software must opt in to the types of branches to be logged; see Section 19.1.2.3.
- Current Privilege Level (CPL) — LBRs can be filtered based on CPL; see Section 19.1.2.5.
- LBR Freeze — LBR and LER recording can be suspended by setting IA32_PERF_GLOBAL_STATUS.LBR_FRZ to 1. See Section 18.4.7 for details on LBR_FRZ.

On some implementations, recording LBRs may require constraining the number of operations that can complete in a cycle. As a result, on these implementations, enabling LBRs may have some performance overhead.

19.1 BEHAVIOR

19.1.1 Logged Operations

LBRs can log most control flow transfer operations.

The source IP recorded for a branch instruction is the IP of that instruction. For events that take place between instructions, the source IP recorded is the IP of the next sequential instruction.

The destination IP recorded is always the target of the branch or event, the next instruction that will execute.

The full list of operations and the respective IPs recorded is shown in Table 19-1.

Table 19-1. LBR IP Values for Various Operations

Operation	FROM_IP	TO_IP
Taken Branch[1], Exception, INT3, INTn, INTO, TSX Abort	Current IP	Target IP
Interrupt	Next IP	Target IP
INIT (BSP)	Next IP	Reset Vector
INIT (AP) + SIPI	Next IP	SIPI Vector
EENTER/ERESUME + EEXIT/AEX	Current IP	Target or Trampoline IP
RSM[2]	Target IP	Target IP
#DB, #SMI, VM exit, VM entry	None	None

NOTES:

1. Direct CALLs with displacement zero, for which the target is typically the next sequential IP, are not treated as taken branches by LBRs.
2. RSM is only recorded in LBRs when IA32_DEBUGCTL.FREEZE_WHILE_SMM is set to 0.

19.1.2 Configuration

19.1.2.1 Enabling and Disabling

LBRs are enabled by setting IA32_LBR_CTL.LBREn to 1.

Some operations, such as entry to a secure mode like SMM or Intel SGX, can cause LBRs to be temporarily disabled. Other operations, such as debug exceptions or some SMX operations, disable LBRs and require software to re-enable them. Details on these interactions can be found in Section 19.1.4.

19.1.2.2 LBR Depth

The number of LBRs used by the processor can be constrained by modifying the IA32_LBR_DEPTH.DEPTH value. DEPTH defaults to the maximum number of LBRs supported by the processor. Allowed DEPTH values can be found in CPUID.(EAX=01CH, ECX=0):EAX[7:0].

Reducing the LBR depth can result in improved performance, by reducing the number of LBRs that need to be read and/or context switched.

On a software write to IA32_LBR_DEPTH, all LBR entries are reset to 0. LERs are not impacted.

A RDMSR or WRMSR to any IA32_LBR_x_* MSRs, such that x ≥ DEPTH, will generate a #GP exception. Note that the XSAVES and XRSTORS instructions access only the LBRs associated with entries 0 to DEPTH-1.

By clearing the LBR entries on writes to IA32_LBR_DEPTH, and forbidding any software writes to LBRs ≥ DEPTH, it is thereby guaranteed that any LBR entries equal to or above DEPTH will have value 0.

19.1.2.3 Branch Type Enabling and Filtering

Software must opt in to the types of branches that are desired to be recorded. These elections are made in IA32_LBR_CTL; see Section 19.2. Branch type options are listed in Table 19-2; only those enabled will be recorded.

Table 19-2. Branch Type Filtering Details

Branch Type	Operations Recorded
COND	Jcc, J*CXZ, and LOOP*
NEAR_IND_JMP	JMP r/m*
NEAR_REL_JMP	JMP rel*
NEAR_IND_CALL	CALL r/m*
NEAR_REL_CALL	CALL rel* (excluding CALLs to the next sequential IP)
NEAR_RET	RET (0C3H)
OTHER_BRANCH	JMP/CALL ptr*, JMP/CALL m*, RET (0C8H), SYS*, interrupts, exceptions (other than debug exceptions), IRET, INT3, INTn, INTO, TSX Abort, EENTER, ERESUME, EEXIT, AEX, INIT, SIPI, RSM

These encodings match those in IA32_LBR_x_INFO.BR_TYPE.

Control flow transfers that are not recorded include #DB, VM exit, VM entry, and #SMI.

19.1.2.4 Call-Stack Mode

The LBR array is, by default, treated as a ring buffer that captures control flow transitions. However, the finite depth of the LBR array can be limiting when profiling certain high-level languages (e.g., C++), where a transition of the execution flow is accompanied by a large number of leaf function calls. These calls to leaf functions, and their returns, are likely to displace the main execution context from the LBRs.

When call-stack mode is enabled, the LBR array can capture unfiltered call data normally, but as return instructions are executed the last captured branch (call) record is flushed from the LBRs in a last-in first-out (LIFO) manner. Thus, branch information pertaining to completed leaf functions will not be retained, while preserving the call stack information of the main line execution path.

Call-stack mode is enabled by setting IA32_LBR_CTL.CALL_STACK to 1. When enabled, near RET instructions receive special treatment. Rather than adding a new record in LBR_0, a near RET will instead "pop" the CALL entry at LBR_0 by shifting entries LBR_1..LBR_[DEPTH-1] up to LBR_0..LBR_[DEPTH-2], and clearing LBR_[DEPTH-1] to 0. Thus, LBR processing software can consume only valid call-stack entries by reading until finding an entry that is all zeros.

Call-stack mode should be used with branch type enabling configured to capture only CALLs (NEAR_REL_CALL and NEAR_IND_CALL) and RETs (NEAR_RET). When configured in this manner, the LBR array emulates a call stack, where CALLs are "pushed" and RETs "pop" them off the stack. If other branch types (JCC, NEAR_*_JMP, or OTHER_BRANCH) are enabled for recording with call-stack mode, LBR behavior may be undefined.

It is recommended that call-stack mode be used along with CPL filtering, by setting at most one of the OS and USR bits in the IA32_LBR_CTL MSR. Call-stack mode does not emulate the stack switch that can occur on CPL transitions, and hence monitoring all CPLs may result in a corrupted LBR call stack.

Call-Stack Mode and LBR Freeze

When IA32_DEBUGCTL.FREEZE_LBRS_ON_PMI=1, IA32_PERF_GLOBAL_STATUS.LBR_FRZ will be set to 1 when a PMI is pended. That will cause LBRs and LERs to cease recording branches until LBR_FRZ is cleared. Because there may be some "skid", or instructions retiring, in between the PMI being pended and the PMI being taken, it is possible that some branches may be missing from the LBRs. In the case of call-stack mode, if a CALL or RET is missed, that can lead to confusing results where CALL entries fail to get "popped" off the stack, and RETs "pop" the wrong CALLs.

An alternative is to utilize CPL filtering to limit LBR recording to less privileged modes only (CPL>3) instead of using the FREEZE_LBRS_ON_PMI=1 feature. This will record branches in the "skid", but avoid recording any branches in the privilege level 0 handler.

19.1.2.5 CPL Filtering

Software must opt in to which CPL(s) will have branches recorded. If IA32_LBR_CTL.OS=1, then branches in CPL=0 can be recorded. If IA32_LBR_CTL.USR=1, then branches in CPL>0 can be recorded. For operations which change the CPL, the operation is recorded in LBRs only if the CPL at the end of the operation is enabled for LBR recording. In cases where the CPL transitions from a value that is filtered out to a value that is enabled for LBR recording, the FROM_IP address for the recorded CPL transition branch or event will be 0FFFFFFFFFFFFFFFH.

19.1.3 Record Data

19.1.3.1 IP Fields

The source and destination IP values in IA32_LBR_x_[FROM|TO]_IP and IA32_LER_x_[FROM|TO]_IP may hold effective IPs or linear IPs (LIPs), depending on the processor generation. The effective IP is the offset from the CS base address, while LIP includes the CS base address. Which IP type is used is indicated in CPUID.(EAX=01CH, ECX=0):EAX[bit 31].

The value read from this field will always be canonical. Note that this includes the case where a canonical violation (#GP) results from executing sequential code that runs precisely to the end of the lower canonical address space (where IP[63:MAXLINADDR-1] is 0, but IP[MAXLINADDR-2:0] is all ones). In this case, the FROM_IP will hold the lowest canonical address in the upper canonical space, such that IP[63:MAXLINADDR-1] is all ones, and IP[MAXLINADDR-2:0] is 0.

In some cases, due to CPL filtering, the FROM_IP of the recorded operation may be filtered out. In this case 0FFFFFFFFFFFFFFFH will be recorded. See Section 19.1.2.5 for details.

Writes of these fields will be forced canonical, such that the processor ignores the value written to the upper bits (IP[63:MAXLINADDR-1]).

19.1.3.2 Branch Types

The IA32_LBR_x_INFO.BR_TYPE and IA32_LER_INFO.BR_TYPE fields encode the branch types as shown in Table 19-3.

Table 19-3. IA32_LBR_x_INFO and IA32_LER_INFO Branch Type Encodings

Encoding	Branch Type
0000B	COND
0001B	NEAR_IND_JMP
0010B	NEAR_REL_JMP
0011B	NEAR_IND_CALL
0100B	NEAR_REL_CALL
0101B	NEAR_RET
011xB	Reserved
1xxxB	OTHER_BRANCH

For a list of branch operations that fall into the categories above, see Table 19-2. In future generations, BR_TYPE bits 2:0 may be used to distinguish between differing types of OTHER_BRANCH.

19.1.3.3 Cycle Time

Each time an operation is recorded in an LBR, the value of the LBR cycle timer is recorded in IA32_LBR_x_INFO.CYC_CNT. The LBR cycle timer is a saturating counter that counts at the processor clock rate. Each time an operation is recorded in an LBR, the counter is reset but continues counting.

There is an LBR cycle counter valid bit, IA32_LBR_x_INFO.CYC_CNT_VALID. When set, the CYC_CNT field holds a valid value, the number of elapsed cycles since the last operation recorded in an LBR (up to 0FFFFH).

Some implementations may opt to reduce the granularity of the CYC_CNT field for larger values. The implication of this is that the least significant bits may be forced to 1 in cases where the count has reached some minimum threshold. It is guaranteed that this reduced granularity will never result in an inaccuracy of more than 10%.

19.1.3.4 Mispredict Information

IA32_LBR_x_INFO.MISPRED provides an indication of whether the recorded branch was predicted incorrectly by the processor. The bit is set if either the taken/not-taken direction of a conditional branch was mispredicted, or if the target of an indirect branch was mispredicted.

19.1.3.5 Intel® TSX Information

IA32_LBR_x_INFO.IN_TSX indicates whether the operation recorded retired during a TSX transaction. IA32_LBR_x_INFO.TSX_ABORT indicates that the operation is a TSX Abort.

19.1.4 Interaction with Other Processor Features

19.1.4.1 SMM

IA32_LBR_CTL.LBREn is saved and cleared on #SMI, and restored on RSM. As a result of disabling LBRs, the #SMI is not recorded. RSM is recorded only if IA32_DEBUGCTL.FREEZE_WHILE_SMM is set to 0, and the FROM_IP will be set to the same value as the TO_IP.

19.1.4.2 SMM Transfer Monitor (STM)

LBREn is not cleared on #SMI when it causes SMM VM exit. Instead, the STM should use the VMCS controls described in Section 19.1.4.3 to disable LBRs while in SMM, and to restore them on VM entries that exit SMM.

On VMCALL to configure STM, IA32_LBR_CTL is cleared.

19.1.4.3 VMX

By default, LBR operation persists across VMX transitions. However, VMCS fields have been added to enable constraining LBR usage to within non-root operation only. See details in Table 19-4.

Table 19-4. LBR VMCS Fields

Name	Type	Bit Position	Behavior
Guest IA32_LBR_CTL	Guest State Field	NA	The guest value of IA32_LBR_CTL is written to this field on all VM exits.
Load Guest IA32_LBR_CTL	Entry Control	21	When set, VM entry will write the value from the "Guest IA32_LBR_CTL" guest state field to IA32_LBR_CTL.
Clear IA32_LBR_CTL	Exit Control	26	When set, VM exit will clear IA32_LBR_CTL after the value has been saved to the "Guest IA32_LBR_CTL" guest state field.

To enable "guest-only" LBR use, a VMM should set both the "Load Guest IA32_LBR_CTL" entry control and the "Clear IA32_LBR_CTL" exit control. For "system-wide" LBR use, where LBRs remain enabled across host and guest(s), a VMM should keep both new VMCS controls clear.

VM entry checks that, if the "Load Guest IA32_LBR_CTL" entry control is 1, bits reserved in the IA32_LBR_CTL MSR must be 0 in the field for that register.

For additional information relating to VMX transitions, see Chapter 25, Chapter 27, and Chapter 28 in the *Intel® 64 and IA-32 Architectures Software Developer's Manual, Volume 3C*.

19.1.4.4 Intel® SGX

On entry to an enclave, via EENTER or ERESUME, logging of LBR entries is suspended. On enclave exit, via EEXIT or AEX, logging resumes. The cycle counter will continue to run during enclave execution.

An exception to the above is made for opt-in debug enclaves. For such enclaves, LBR logging is not impacted.

19.1.4.5 Debug Exceptions

When a branch happens because of a #DB exception, IA32_LBR_CTL.LBREn is cleared. As a result, the operation is not recorded.

19.1.4.6 SMX

On GETSEC leaves SENTER or ENTERACCS, IA32_LBR_CTL is cleared. As a result, the operation is not recorded.

19.1.4.7 MWAIT

On an MWAIT that requests a C-state deeper than C1, IA32_LBR_x_* MSRs may be cleared to 0. IA32_LBR_CTL, IA32_LBR_DEPTH, and IA32_LER_* MSRs will be preserved.

For an MWAIT that enters a C-state equal to or less deep than C1, and all C-states that enter as a result of Hardware Duty Cycling (HDC), all LBR MSRs are preserved.

19.1.4.8 Processor Event-Based Sampling (PEBS)

PEBS records can be configured to include LBRs, by setting PEBS_DATA_CFG.LBREn[3]=1. The number of LBRs to include in the record is also configurable, via PEBS_DATA_CFG.NUM_LBRS[28:24]. For details on PEBS, see Section 20.9 of the *Intel® 64 and IA-32 Architectures Software Developer's Manual, Volume 3B*.

If NUM_LBRS is set to a value greater than LBR_DEPTH, then only LBR_DEPTH entries will be written into the PEBS record. Further, the Record Size field will be decreased to match the actual size of the record to be written, and the Record Format field will replace the value of NUM_LBRS with the value of LBR_DEPTH. These adjustments ensure that software is able to properly interpret the PEBS record.

19.2 MSRS

The MSRs that represent the LBR entries (IA32_LBR_x_[TO|FROM|INFO]) and the LER entry (IA32_LER_[TO|FROM|INFO]) do not fault on writes. Any address field written will force sign-extension based on the maximum linear address width supported by the processor, and any non-zero value written to undefined bits may be ignored such that subsequent reads return 0.

On a warm reset, all LBR MSRs, including IA32_LBR_DEPTH, have their values preserved. However, IA32_LBR_CTL.LBREn is cleared to 0, disabling LBRs. If a warm reset is triggered while the processor is in the C6 idle state, also known as warm init, all LBR MSRs will be reset to their initial values.

See Table 2-2 in the *Intel® 64 and IA-32 Architectures Software Developer's Manual, Volume 4* for details on LBR MSRs.

19.3 FAST LBR READ ACCESS

XSAVES provides a faster means than RDMSR for software to read all LBRs. When using XSAVES for reading LBRs rather than for context switch, software should take care to ensure that XSAVES does not write LBR state to an area of memory that has been or will be used by XRSTORS. This could corrupt INIT tracking.

19.4 OTHER IMPACTS

19.4.1 Branch Trace Store on Intel Atom® Processors

Branch Trace Store (BTS) on Intel Atom processors that support the architectural form of the LBR feature has dependencies on the LBR configuration. BTS will store out the LBR_0 (TOS) record each time a taken branch or event retires. If any filtering of LBRs is employed, or if LBRs are disabled, some duplicate entries may be stored by BTS. Like LBRs and LERs, BTS is suspended when IA32_PERF_GLOBAL_STATUS.LBR_FRZ is set to 1.

BTS will change to cease issuing branch records for direct near CALLs with displacement zero to align with LBR behavior.

19.4.2 IA32_DEBUGCTL

On processors that do not support model-specific LBRs, IA32_DEBUGCTL[bit 0] has no meaning. It can be written to 0 or 1, but reads will always return 0.

19.4.3 IA32_PERF_CAPABILITIES

On processors that do not support model-specific LBRs, IA32_PERF_CAPABILITIES.LBR_FMT will have the value 03FH.

CHAPTER 20
PERFORMANCE MONITORING

Intel 64 and IA-32 architectures provide facilities for monitoring performance via a PMU (Performance Monitoring Unit).

NOTE

Performance monitoring events can be found here: https://perfmon-events.intel.com/.

Additionally, performance monitoring event files for Intel processors are hosted by the Intel Open Source Technology Center. These files can be downloaded here: https://download.01.org/perfmon/.

20.1 PERFORMANCE MONITORING OVERVIEW

Performance monitoring was introduced in the Pentium processor with a set of model-specific performance-monitoring counter MSRs. These counters permit selection of processor performance parameters to be monitored and measured. The information obtained from these counters can be used for tuning system and compiler performance.

In Intel P6 family of processors, the performance monitoring mechanism was enhanced to permit a wider selection of events to be monitored and to allow greater control events to be monitored. Next, Intel processors based on Intel NetBurst microarchitecture introduced a distributed style of performance monitoring mechanism and performance events.

The performance monitoring mechanisms and performance events defined for the Pentium, P6 family, and Intel processors based on Intel NetBurst microarchitecture are not architectural. They are all model specific (not compatible among processor families). Intel Core Solo and Intel Core Duo processors support a set of architectural performance events and a set of non-architectural performance events. Newer Intel processor generations support enhanced architectural performance events and non-architectural performance events.

Starting with Intel Core Solo and Intel Core Duo processors, there are two classes of performance monitoring capabilities. The first class supports events for monitoring performance using counting or interrupt-based event sampling usage. These events are non-architectural and vary from one processor model to another. They are similar to those available in Pentium M processors. These non-architectural performance monitoring events are specific to the microarchitecture and may change with enhancements. They are discussed in Section 20.6.3, "Performance Monitoring (Processors Based on Intel NetBurst® Microarchitecture)." Non-architectural events for a given microarchitecture cannot be enumerated using CPUID; and they can be found at: https://perfmon-events.intel.com/.

The second class of performance monitoring capabilities is referred to as architectural performance monitoring. This class supports the same counting and Interrupt-based event sampling usages, with a smaller set of available events. The visible behavior of architectural performance events is consistent across processor implementations. Availability of architectural performance monitoring capabilities is enumerated using the CPUID.0AH. These events are discussed in Section 20.2.

See also:

- Section 20.2, "Architectural Performance Monitoring".
- Section 20.3, "Performance Monitoring (Intel® Core™ Processors and Intel® Xeon® Processors)".
  - Section 20.3.1, "Performance Monitoring for Processors Based on Nehalem Microarchitecture".
  - Section 20.3.2, "Performance Monitoring for Processors Based on Westmere Microarchitecture".
  - Section 20.3.3, "Intel® Xeon® Processor E7 Family Performance Monitoring Facility".
  - Section 20.3.4, "Performance Monitoring for Processors Based on Sandy Bridge Microarchitecture".
  - Section 20.3.5, "3rd Generation Intel® Core™ Processor Performance Monitoring Facility".

- Section 20.3.6, “4th Generation Intel® Core™ Processor Performance Monitoring Facility”.
- Section 20.3.7, “5th Generation Intel® Core™ Processor and Intel® Core™ M Processor Performance Monitoring Facility”.
- Section 20.3.8, “6th Generation, 7th Generation and 8th Generation Intel® Core™ Processor Performance Monitoring Facility”.
- Section 20.3.9, “10th Generation Intel® Core™ Processor Performance Monitoring Facility”.
- Section 20.3.10, “12th and 13th Generation Intel® Core™ Processors, and 4th Generation Intel® Xeon® Scalable Processor Family Performance Monitoring Facility”.

— Section 20.4, “Performance monitoring (Intel® Xeon™ Phi Processors)”.
- Section 20.4.1, “Intel® Xeon Phi™ Processor 7200/5200/3200 Performance Monitoring”.

— Section 20.5, “Performance Monitoring (Intel Atom® Processors)”.
- Section 20.5.1, “Performance Monitoring (45 nm and 32 nm Intel Atom® Processors)”.
- Section 20.5.2, “Performance Monitoring for Silvermont Microarchitecture”.
- Section 20.5.3, “Performance Monitoring for Goldmont Microarchitecture”.
- Section 20.5.4, “Performance Monitoring for Goldmont Plus Microarchitecture”.
- Section 20.5.5, “Performance Monitoring for Tremont Microarchitecture”.

— Section 20.6, “Performance Monitoring (Legacy Intel Processors)”.
- Section 20.6.1, “Performance Monitoring (Intel® Core™ Solo and Intel® Core™ Duo Processors)”.
- Section 20.6.2, “Performance Monitoring (Processors Based on Intel® Core™ Microarchitecture)”.
- Section 20.6.3, “Performance Monitoring (Processors Based on Intel NetBurst® Microarchitecture)”.
- Section 20.6.4, “Performance Monitoring and Intel Hyper-Threading Technology in Processors Based on Intel NetBurst® Microarchitecture”.
  - Section 20.6.4.5, “Counting Clocks on systems with Intel® Hyper-Threading Technology in Processors Based on Intel NetBurst® Microarchitecture”.
- Section 20.6.5, “Performance Monitoring and Dual-Core Technology”.
- Section 20.6.6, “Performance Monitoring on 64-bit Intel Xeon Processor MP with Up to 8-MByte L3 Cache”.
- Section 20.6.7, “Performance Monitoring on L3 and Caching Bus Controller Sub-Systems”.
- Section 20.6.8, “Performance Monitoring (P6 Family Processor)”.
- Section 20.6.9, “Performance Monitoring (Pentium Processors)”.

— Section 20.7, “Counting Clocks”.

— Section 20.8, “IA32_PERF_CAPABILITIES MSR Enumeration”.

— Section 20.9, “PEBS Facility”.

20.2 ARCHITECTURAL PERFORMANCE MONITORING

Performance monitoring events are architectural when they behave consistently across microarchitectures. Intel Core Solo and Intel Core Duo processors introduced architectural performance monitoring. The feature provides a mechanism for software to enumerate performance events and provides configuration and counting facilities for events.

Architectural performance monitoring does allow for enhancement across processor implementations. The CPUID.0AH leaf provides version ID for each enhancement. Intel Core Solo and Intel Core Duo processors support base level functionality identified by version ID of 1. Processors based on Intel Core microarchitecture support, at a minimum, the base level functionality of architectural performance monitoring. Intel Core 2 Duo processor T

7700 and newer processors based on Intel Core microarchitecture support both the base level functionality and enhanced architectural performance monitoring identified by version ID of 2.

45 nm and 32 nm Intel Atom processors and Intel Atom processors based on the Silvermont microarchitecture support the functionality provided by versionID 1, 2, and 3; CPUID.0AH:EAX[7:0] reports versionID = 3 to indicate the aggregate of architectural performance monitoring capabilities. Intel Atom processors based on the Airmont microarchitecture support the same performance monitoring capabilities as those based on the Silvermont microarchitecture. Intel Atom processors based on the Goldmont and Goldmont Plus microarchitectures support versionID 4. Intel Atom processors starting with processors based on the Tremont microarchitecture support versionID 5.

Intel Core processors and related Intel Xeon processor families based on the Nehalem through Broadwell microarchitectures support version ID 3. Intel processors based on the Skylake through Coffee Lake microarchitectures support versionID 4. Intel processors starting with processors based on the Ice Lake microarchitecture support versionID 5.

20.2.1 Architectural Performance Monitoring Version 1

Configuring an architectural performance monitoring event involves programming performance event select registers. There are a finite number of performance event select MSRs (IA32_PERFEVTSELx MSRs). The result of a performance monitoring event is reported in a performance monitoring counter (IA32_PMCx MSR). Performance monitoring counters are paired with performance monitoring select registers.

Performance monitoring select registers and counters are architectural in the following respects:

- Bit field layout of IA32_PERFEVTSELx is consistent across microarchitectures.
- Addresses of IA32_PERFEVTSELx MSRs remain the same across microarchitectures.
- Addresses of IA32_PMC MSRs remain the same across microarchitectures.
- Each logical processor has its own set of IA32_PERFEVTSELx and IA32_PMCx MSRs. Configuration facilities and counters are not shared between logical processors sharing a processor core.

Architectural performance monitoring provides a CPUID mechanism for enumerating the following information:

- Number of performance monitoring counters available to software in a logical processor (each IA32_PERFEVTSELx MSR is paired to the corresponding IA32_PMCx MSR).
- Number of bits supported in each IA32_PMCx.
- Number of architectural performance monitoring events supported in a logical processor.

Software can use CPUID to discover architectural performance monitoring availability (CPUID.0AH). The architectural performance monitoring leaf provides an identifier corresponding to the version number of architectural performance monitoring available in the processor.

The version identifier is retrieved by querying CPUID.0AH:EAX[bits 7:0] (see Chapter 3, "Instruction Set Reference, A-L," in the *Intel® 64 and IA-32 Architectures Software Developer's Manual, Volume 2A*). If the version identifier is greater than zero, architectural performance monitoring capability is supported. Software queries the CPUID.0AH for the version identifier first; it then analyzes the value returned in CPUID.0AH.EAX, CPUID.0AH.EBX to determine the facilities available.

In the initial implementation of architectural performance monitoring; software can determine how many IA32_PERFEVTSELx/ IA32_PMCx MSR pairs are supported per core, the bit-width of PMC, and the number of architectural performance monitoring events available.

20.2.1.1 Architectural Performance Monitoring Version 1 Facilities

Architectural performance monitoring facilities include a set of performance monitoring counters and performance event select registers. These MSRs have the following properties:

- IA32_PMCx MSRs start at address 0C1H and occupy a contiguous block of MSR address space; the number of MSRs per logical processor is reported using CPUID.0AH:EAX[15:8]. Note that this may vary from the number of physical counters present on the hardware, because an agent running at a higher privilege level (e.g., a VMM) may not expose all counters.

- IA32_PERFEVTSELx MSRs start at address 186H and occupy a contiguous block of MSR address space. Each performance event select register is paired with a corresponding performance counter in the 0C1H address block. Note the number of IA32_PERFEVTSELx MSRs may vary from the number of physical counters present on the hardware, because an agent running at a higher privilege level (e.g., a VMM) may not expose all counters.
- The bit width of an IA32_PMCx MSR is reported using the CPUID.0AH:EAX[23:16]. This the number of valid bits for read operation. On write operations, the lower-order 32 bits of the MSR may be written with any value, and the high-order bits are sign-extended from the value of bit 31.
- Bit field layout of IA32_PERFEVTSELx MSRs is defined architecturally.

See Figure 20-1 for the bit field layout of IA32_PERFEVTSELx MSRs. The bit fields are:

- **Event select field (bits 0 through 7) —** Selects the event logic unit used to detect microarchitectural conditions (see Table 20-1, for a list of architectural events and their 8-bit codes). The set of values for this field is defined architecturally; each value corresponds to an event logic unit for use with an architectural performance event. The number of architectural events is queried using CPUID.0AH:EAX. A processor may support only a subset of pre-defined values.

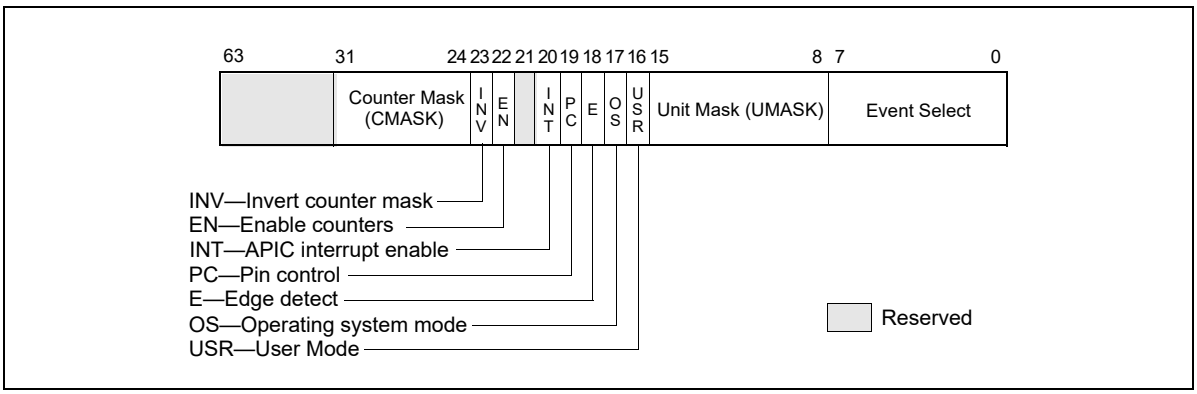

Figure 20-1. Layout of IA32_PERFEVTSELx MSRs

- **Unit mask (UMASK) field (bits 8 through 15)** — These bits qualify the condition that the selected event logic unit detects. Valid UMASK values for each event logic unit are specific to the unit. For each architectural performance event, its corresponding UMASK value defines a specific microarchitectural condition.

  A pre-defined microarchitectural condition associated with an architectural event may not be applicable to a given processor. The processor then reports only a subset of pre-defined architectural events. Pre-defined architectural events are listed in Table 20-1; support for pre-defined architectural events is enumerated using CPUID.0AH:EBX.
- **USR (user mode) flag (bit 16) —** Specifies that the selected microarchitectural condition is counted when the logical processor is operating at privilege levels 1, 2 or 3. This flag can be used with the OS flag.
- **OS (operating system mode) flag (bit 17) —** Specifies that the selected microarchitectural condition is counted when the logical processor is operating at privilege level 0. This flag can be used with the USR flag.
- **E (edge detect) flag (bit 18) —** Enables (when set) edge detection of the selected microarchitectural condition. The logical processor counts the number of deasserted to asserted transitions for any condition that can be expressed by the other fields. The mechanism does not permit back-to-back assertions to be distinguished.

  This mechanism allows software to measure not only the fraction of time spent in a particular state, but also the average length of time spent in such a state (for example, the time spent waiting for an interrupt to be serviced).
- **PC (pin control) flag (bit 19) —** Beginning with Sandy Bridge microarchitecture, this bit is reserved (not writeable). On processors based on previous microarchitectures, the logical processor toggles the PM*i* pins and increments the counter when performance-monitoring events occur; when clear, the processor toggles the PM*i* pins when the counter overflows. The toggling of a pin is defined as assertion of the pin for a single bus clock followed by deassertion.

- **INT (APIC interrupt enable) flag (bit 20) —** When set, the logical processor generates an exception through its local APIC on counter overflow.
- **EN (Enable Counters) Flag (bit 22) —** When set, performance counting is enabled in the corresponding performance-monitoring counter; when clear, the corresponding counter is disabled. The event logic unit for a UMASK must be disabled by setting IA32_PERFEVTSELx[bit 22] = 0, before writing to IA32_PMCx.
- **INV (invert) flag (bit 23) —** When set, inverts the counter-mask (CMASK) comparison, so that both greater than or equal to and less than comparisons can be made (0: greater than or equal; 1: less than). Note if counter-mask is programmed to zero, INV flag is ignored.
- **Counter mask (CMASK) field (bits 24 through 31) —** When this field is not zero, a logical processor compares this mask to the events count of the detected microarchitectural condition during a single cycle. If the event count is greater than or equal to this mask, the counter is incremented by one. Otherwise the counter is not incremented.

  This mask is intended for software to characterize microarchitectural conditions that can count multiple occurrences per cycle (for example, two or more instructions retired per clock; or bus queue occupations). If the counter-mask field is 0, then the counter is incremented each cycle by the event count associated with multiple occurrences.

20.2.1.2 Pre-defined Architectural Performance Events

Table 20-1 lists architecturally defined events.

Table 20-1. UMask and Event Select Encodings for Pre-Defined Architectural Performance Events

Bit Position CPUID.AH.EBX	Event Name	UMask	Event Select
0	UnHalted Core Cycles	00H	3CH
1	Instruction Retired	00H	C0H
2	UnHalted Reference Cycles[1]	01H	3CH
3	LLC Reference	4FH	2EH
4	LLC Misses	41H	2EH
5	Branch Instruction Retired	00H	C4H
6	Branch Misses Retired	00H	C5H
7	Topdown Slots	01H	A4H

NOTES:

1. Implementations prior to the 12th generation Intel® Core™ processor P-cores count at core crystal clock, TSC, or bus clock frequency.

A processor that supports architectural performance monitoring may not support all the predefined architectural performance events (Table 20-1). The number of architectural events is reported through CPUID.0AH:EAX[31:24], while non-zero bits in CPUID.0AH:EBX indicate any architectural events that are not available.

The behavior of each architectural performance event is expected to be consistent on all processors that support that event. Minor variations between microarchitectures are noted below:

- **UnHalted Core Cycles —** Event select 3CH, Umask 00H

  This event counts core clock cycles when the clock signal on a specific core is running (not halted). The counter does not advance in the following conditions:

  — an ACPI C-state other than C0 for normal operation

  — HLT

  — STPCLK# pin asserted

  — being throttled by TM1

  — during the frequency switching phase of a performance state transition (see Chapter 15, “Power and Thermal Management”)

The performance counter for this event counts across performance state transitions using different core clock frequencies.

- **Instructions Retired —** Event select C0H, Umask 00H

  This event counts the number of instructions at retirement. For instructions that consist of multiple micro-ops, this event counts the retirement of the last micro-op of the instruction. An instruction with a REP prefix counts as one instruction (not per iteration). Faults before the retirement of the last micro-op of a multi-ops instruction are not counted.

  This event does not increment under VM-exit conditions. Counters continue counting during hardware interrupts, traps, and inside interrupt handlers.

- **UnHalted Reference Cycles —** Event select 3CH, Umask 01H

  This event counts reference clock cycles at a fixed frequency while the clock signal on the core is running. The event counts at a fixed frequency, irrespective of core frequency changes due to performance state transitions. Processors may implement this behavior differently. Current implementations use the core crystal clock, TSC or the bus clock. Because the rate may differ between implementations, software should calibrate it to a time source with known frequency.

- **Last Level Cache References —** Event select 2EH, Umask 4FH

  This event counts requests originating from the core that reference a cache line in the last level on-die cache. The event count includes speculation and cache line fills due to the first-level cache hardware prefetcher, but may exclude cache line fills due to other hardware-prefetchers.

  Because cache hierarchy, cache sizes and other implementation-specific characteristics; value comparison to estimate performance differences is not recommended.

- **Last Level Cache Misses —** Event select 2EH, Umask 41H

  This event counts each cache miss condition for references to the last level on-die cache. The event count may include speculation and cache line fills due to the first-level cache hardware prefetcher, but may exclude cache line fills due to other hardware-prefetchers.

  Because cache hierarchy, cache sizes and other implementation-specific characteristics; value comparison to estimate performance differences is not recommended.

- **Branch Instructions Retired —** Event select C4H, Umask 00H

  This event counts branch instructions at retirement. It counts the retirement of the last micro-op of a branch instruction.

- **All Branch Mispredict Retired —** Event select C5H, Umask 00H

  This event counts mispredicted branch instructions at retirement. It counts the retirement of the last micro-op of a branch instruction in the architectural path of execution and experienced misprediction in the branch prediction hardware.

  Branch prediction hardware is implementation-specific across microarchitectures; value comparison to estimate performance differences is not recommended.

- **Topdown Slots —** Event select A4H, Umask 01H

  This event counts the total number of available slots for an unhalted logical processor.

  The event increments by machine-width of the narrowest pipeline as employed by the Top-down Microarchitecture Analysis method. The count is distributed among unhalted logical processors (hyper-threads) who share the same physical core, in processors that support Intel Hyper-Threading Technology.

  Software can use this event as the denominator for the top-level metrics of the Top-down Microarchitecture Analysis method.

NOTE

Programming decisions or software precisians on functionality should not be based on the event values or dependent on the existence of performance monitoring events.

20.2.2 Architectural Performance Monitoring Version 2

The enhanced features provided by architectural performance monitoring version 2 include the following:

- **Fixed-function performance counter register and associated control register** — Three of the architectural performance events are counted using three fixed-function MSRs (IA32_FIXED_CTR0 through IA32_FIXED_CTR2). Each of the fixed-function PMC can count only one architectural performance event.

  Configuring the fixed-function PMCs is done by writing to bit fields in the MSR (IA32_FIXED_CTR_CTRL) located at address 38DH. Unlike configuring performance events for general-purpose PMCs (IA32_PMCx) via UMASK field in (IA32_PERFEVTSELx), configuring, programming IA32_FIXED_CTR_CTRL for fixed-function PMCs do not require any UMASK.

- **Simplified event programming** — Most frequent operation in programming performance events are enabling/disabling event counting and checking the status of counter overflows. Architectural performance event version 2 provides three architectural MSRs:

  — IA32_PERF_GLOBAL_CTRL allows software to enable/disable event counting of all or any combination of fixed-function PMCs (IA32_FIXED_CTRx) or any general-purpose PMCs via a single WRMSR.

  — IA32_PERF_GLOBAL_STATUS allows software to query counter overflow conditions on any combination of fixed-function PMCs or general-purpose PMCs via a single RDMSR.

  — IA32_PERF_GLOBAL_OVF_CTRL allows software to clear counter overflow conditions on any combination of fixed-function PMCs or general-purpose PMCs via a single WRMSR.

- **PMI Overhead Mitigation** — Architectural performance monitoring version 2 introduces two bit field interface in IA32_DEBUGCTL for PMI service routine to accumulate performance monitoring data and LBR records with reduced perturbation from servicing the PMI. The two bit fields are:

  — IA32_DEBUGCTL.Freeze_LBR_On_PMI(bit 11). In architectural performance monitoring version 2, only the legacy semantic behavior is supported. See Section 18.4.7 for details of the legacy Freeze LBRs on PMI control.

  — IA32_DEBUGCTL.Freeze_PerfMon_On_PMI(bit 12). In architectural performance monitoring version 2, only the legacy semantic behavior is supported. See Section 18.4.7 for details of the legacy Freeze LBRs on PMI control.

The facilities provided by architectural performance monitoring version 2 can be queried from CPUID leaf 0AH by examining the content of register EDX:

- Bits 0 through 4 of CPUID.0AH.EDX indicates the number of fixed-function performance counters available per core,
- Bits 5 through 12 of CPUID.0AH.EDX indicates the bit-width of fixed-function performance counters. Bits beyond the width of the fixed-function counter are reserved and must be written as zeros.

NOTE

Early generation of processors based on Intel Core microarchitecture may report in CPUID.0AH:EDX of support for version 2 but indicating incorrect information of version 2 facilities.

The IA32_FIXED_CTR_CTRL MSR include multiple sets of 4-bit field, each 4 bit field controls the operation of a fixed-function performance counter. Figure 20-2 shows the layout of 4-bit controls for each fixed-function PMC. Two sub-fields are currently defined within each control. The definitions of the bit fields are:

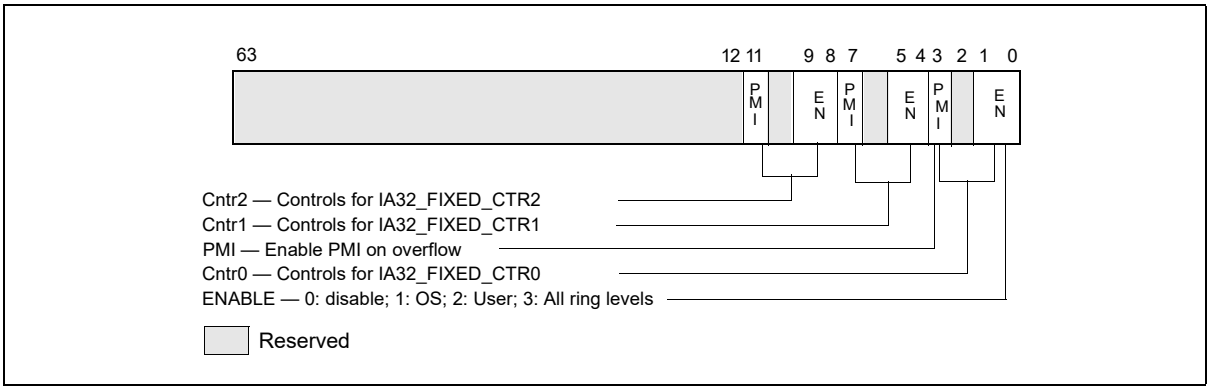

Figure 20-2. Layout of IA32_FIXED_CTR_CTRL MSR

- **Enable field (lowest 2 bits within each 4-bit control)** — When bit 0 is set, performance counting is enabled in the corresponding fixed-function performance counter to increment while the target condition associated with the architecture performance event occurred at ring 0. When bit 1 is set, performance counting is enabled in the corresponding fixed-function performance counter to increment while the target condition associated with the architecture performance event occurred at ring greater than 0. Writing 0 to both bits stops the performance counter. Writing a value of 11B enables the counter to increment irrespective of privilege levels.
- **PMI field (the fourth bit within each 4-bit control)** — When set, the logical processor generates an exception through its local APIC on overflow condition of the respective fixed-function counter.

IA32_PERF_GLOBAL_CTRL MSR provides single-bit controls to enable counting of each performance counter. Figure 20-3 shows the layout of IA32_PERF_GLOBAL_CTRL. Each enable bit in IA32_PERF_GLOBAL_CTRL is AND'ed with the enable bits for all privilege levels in the respective IA32_PERFEVTSELx or IA32_PERF_FIXED_CTR_CTRL MSRs to start/stop the counting of respective counters. Counting is enabled if the AND'ed results is true; counting is disabled when the result is false.

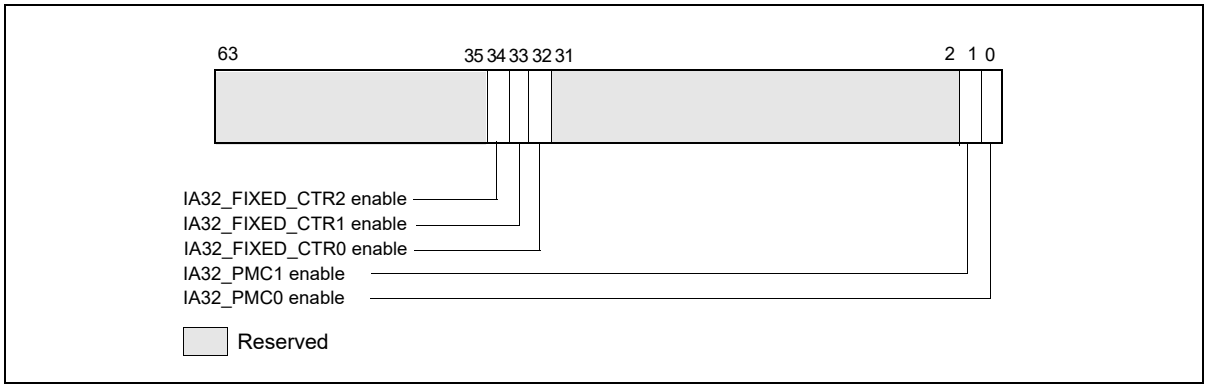

Figure 20-3. Layout of IA32_PERF_GLOBAL_CTRL MSR

The behavior of the fixed function performance counters supported by architectural performance version 2 is expected to be consistent on all processors that support those counters, and is defined as follows.

Table 20-2. Association of Fixed-Function Performance Counters with Architectural Performance Events

Fixed-Function Performance Counter	Address	Event Mask Mnemonic	Description
IA32_FIXED_CTR0	309H	INST_RETIRED.ANY	This event counts the number of instructions that retire execution. For instructions that consist of multiple uops, this event counts the retirement of the last uop of the instruction. The counter continues counting during hardware interrupts, traps, and in-side interrupt handlers.
IA32_FIXED_CTR1	30AH	CPU_CLK_UNHALTED.THREAD CPU_CLK_UNHALTED.CORE	The CPU_CLK_UNHALTED.THREAD event counts the number of core cycles while the logical processor is not in a halt state. If there is only one logical processor in a processor core, CPU_CLK_UNHALTED.CORE counts the unhalted cycles of the processor core. The core frequency may change from time to time due to transitions associated with Enhanced Intel SpeedStep Technology or TM2. For this reason this event may have a changing ratio with regards to time.
IA32_FIXED_CTR2	30BH	CPU_CLK_UNHALTED.REF_TSC	This event counts the number of reference cycles at the TSC rate when the core is not in a halt state and not in a TM stop-clock state. The core enters the halt state when it is running the HLT instruction or the MWAIT instruction. This event is not affected by core frequency changes (e.g., P states) but counts at the same frequency as the time stamp counter. This event can approximate elapsed time while the core was not in a halt state and not in a TM stopclock state.
IA32_FIXED_CTR3	30CH	TOPDOWN.SLOTS	This event counts the number of available slots for an unhalted logical processor. The event increments by machine-width of the narrowest pipeline as employed by the Top-down Microarchitecture Analysis method. The count is distributed among unhalted logical processors (hyper-threads) who share the same physical core. Software can use this event as the denominator for the top-level metrics of the Top-down Microarchitecture Analysis method.

IA32_PERF_GLOBAL_STATUS MSR provides single-bit status for software to query the overflow condition of each performance counter. IA32_PERF_GLOBAL_STATUS[bit 62] indicates overflow conditions of the DS area data buffer. IA32_PERF_GLOBAL_STATUS[bit 63] provides a CondChgd bit to indicate changes to the state of performance monitoring hardware. Figure 20-4 shows the layout of IA32_PERF_GLOBAL_STATUS. A value of 1 in bits 0, 1, 32 through 34 indicates a counter overflow condition has occurred in the associated counter.

When a performance counter is configured for PEBS, overflow condition in the counter generates a performance-monitoring interrupt signaling a PEBS event. On a PEBS event, the processor stores data records into the buffer area (see Section 18.15.5), clears the counter overflow status., and sets the "OvfBuffer" bit in IA32_PERF_GLOBAL_STATUS.

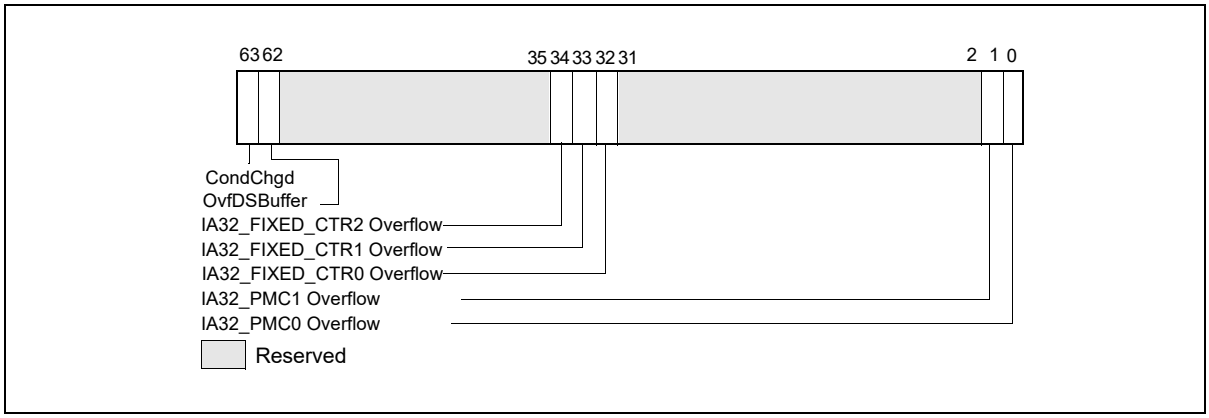

Figure 20-4. Layout of IA32_PERF_GLOBAL_STATUS MSR

IA32_PERF_GLOBAL_OVF_CTL MSR allows software to clear overflow indicator(s) of any general-purpose or fixed-function counters via a single WRMSR. Software should clear overflow indications when

- Setting up new values in the event select and/or UMASK field for counting or interrupt-based event sampling.
- Reloading counter values to continue collecting next sample.
- Disabling event counting or interrupt-based event sampling.

The layout of IA32_PERF_GLOBAL_OVF_CTL is shown in Figure 20-5.

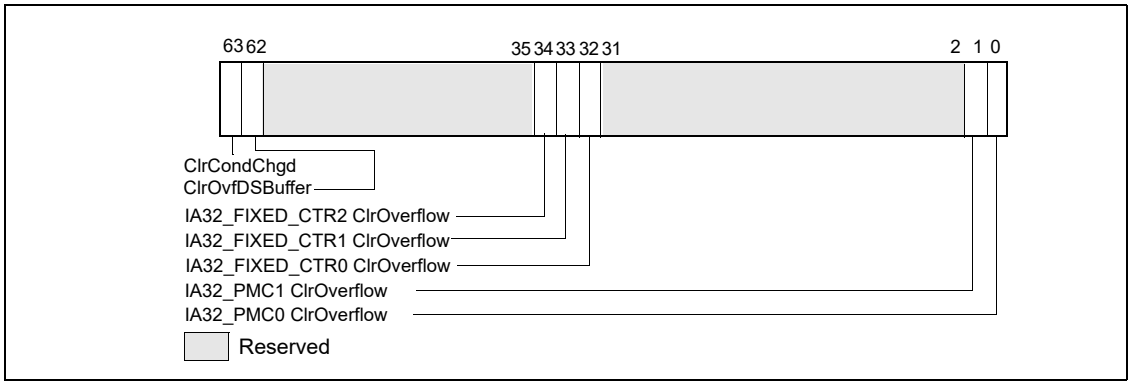

Figure 20-5. Layout of IA32_PERF_GLOBAL_OVF_CTRL MSR

20.2.3 Architectural Performance Monitoring Version 3

Processors supporting architectural performance monitoring version 3 also supports version 1 and 2, as well as capability enumerated by CPUID leaf 0AH. Specifically, version 3 provides the following enhancement in performance monitoring facilities if a processor core comprising of more than one logical processor, i.e., a processor core supporting Intel Hyper-Threading Technology or simultaneous multi-threading capability:

- AnyThread counting for processor core supporting two or more logical processors. The interface that supports AnyThread counting include:
  - Each IA32_PERFEVTSELx MSR (starting at MSR address 186H) support the bit field layout defined in Figure 20-6.

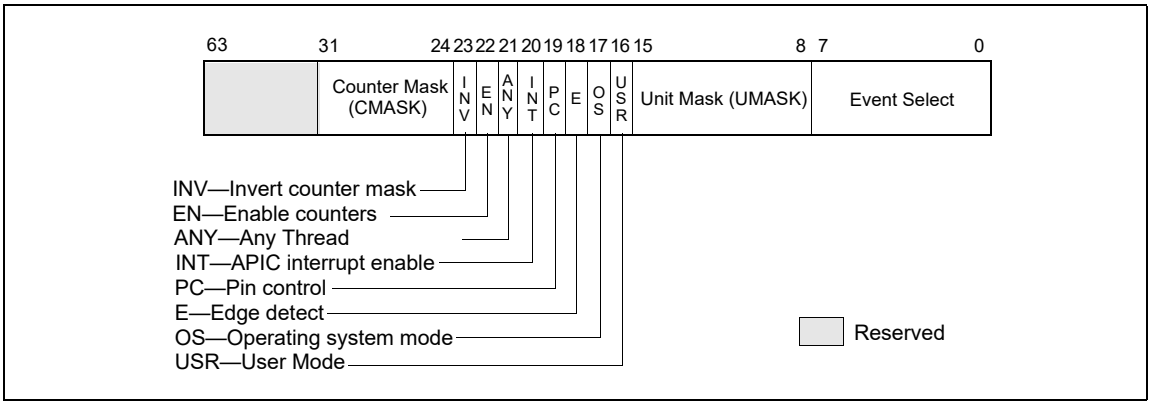

Figure 20-6. Layout of IA32_PERFEVTSELx MSRs Supporting Architectural Performance Monitoring Version 3

Bit 21 (AnyThread) of IA32_PERFEVTSELx is supported in architectural performance monitoring version 3 for processor core comprising of two or more logical processors. When set to 1, it enables counting the associated event conditions (including matching the thread's CPL with the OS/USR setting of IA32_PERFEVTSELx) occurring across all logical processors sharing a processor core. When bit 21 is 0, the counter only increments the associated event conditions (including matching the thread's CPL with the OS/USR setting of IA32_PERFEVTSELx) occurring in the logical processor which programmed the IA32_PERFEVTSELx MSR.

— Each fixed-function performance counter IA32_FIXED_CTRx (starting at MSR address 309H) is configured by a 4-bit control block in the IA32_PERF_FIXED_CTR_CTRL MSR. The control block also allow thread-specificity configuration using an AnyThread bit. The layout of IA32_PERF_FIXED_CTR_CTRL MSR is shown.

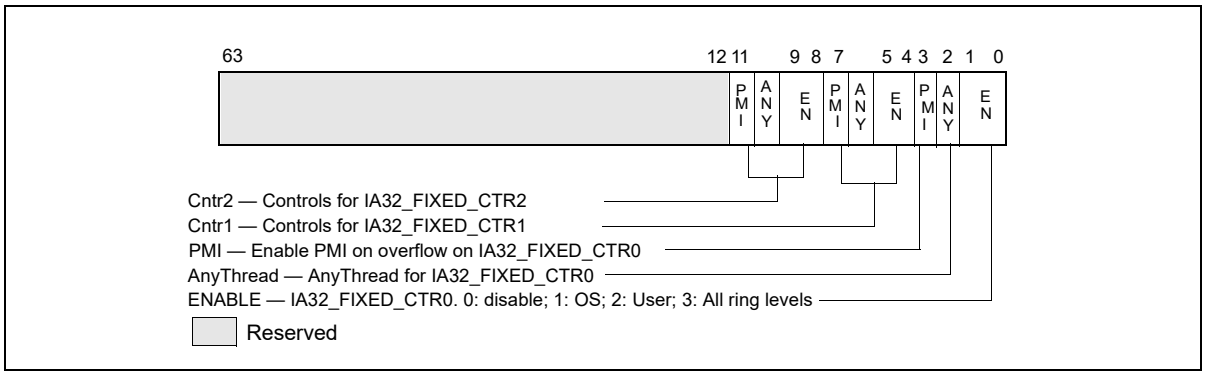

Figure 20-7. IA32_FIXED_CTR_CTRL MSR Supporting Architectural Performance Monitoring Version 3

Each control block for a fixed-function performance counter provides an **AnyThread** (bit position 2 + 4*N, N= 0, 1, etc.) bit. When set to 1, it enables counting the associated event conditions (including matching the thread's CPL with the ENABLE setting of the corresponding control block of IA32_PERF_FIXED_CTR_CTRL) occurring across all logical processors sharing a processor core. When an **AnyThread** bit is 0 in IA32_PERF_FIXED_CTR_CTRL, the corresponding fixed counter only increments the associated event conditions occurring in the logical processor which programmed the IA32_PERF_FIXED_CTR_CTRL MSR.

- The IA32_PERF_GLOBAL_CTRL, IA32_PERF_GLOBAL_STATUS, IA32_PERF_GLOBAL_OVF_CTRL MSRs provide single-bit controls/status for each general-purpose and fixed-function performance counter. Figure 20-8 and Figure 20-9 show the layout of these MSRs for N general-purpose performance counters (where N is reported by CPUID.0AH:EAX[15:8]) and three fixed-function counters.

NOTE

The number of general-purpose performance monitoring counters (i.e., N in Figure 20-9) can vary across processor generations within a processor family, across processor families, or could be different depending on the configuration chosen at boot time in the BIOS regarding Intel Hyper Threading Technology, (e.g., N=2 for 45 nm Intel Atom processors; N =4 for processors based on the Nehalem microarchitecture; for processors based on the Sandy Bridge microarchitecture, N = 4 if Intel Hyper Threading Technology is active and N=8 if not active). In addition, the number of counters may vary from the number of physical counters present on the hardware, because an agent running at a higher privilege level (e.g., a VMM) may not expose all counters.

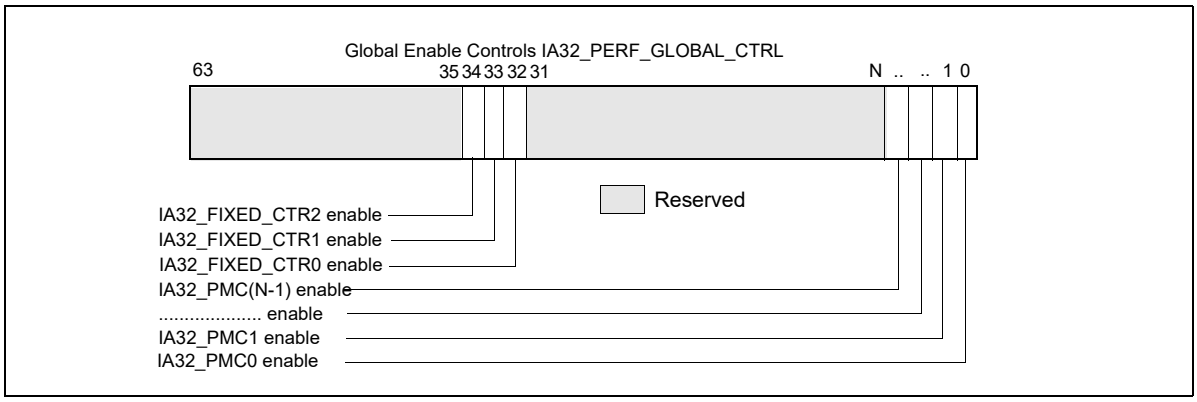

Figure 20-8. Layout of Global Performance Monitoring Control MSR

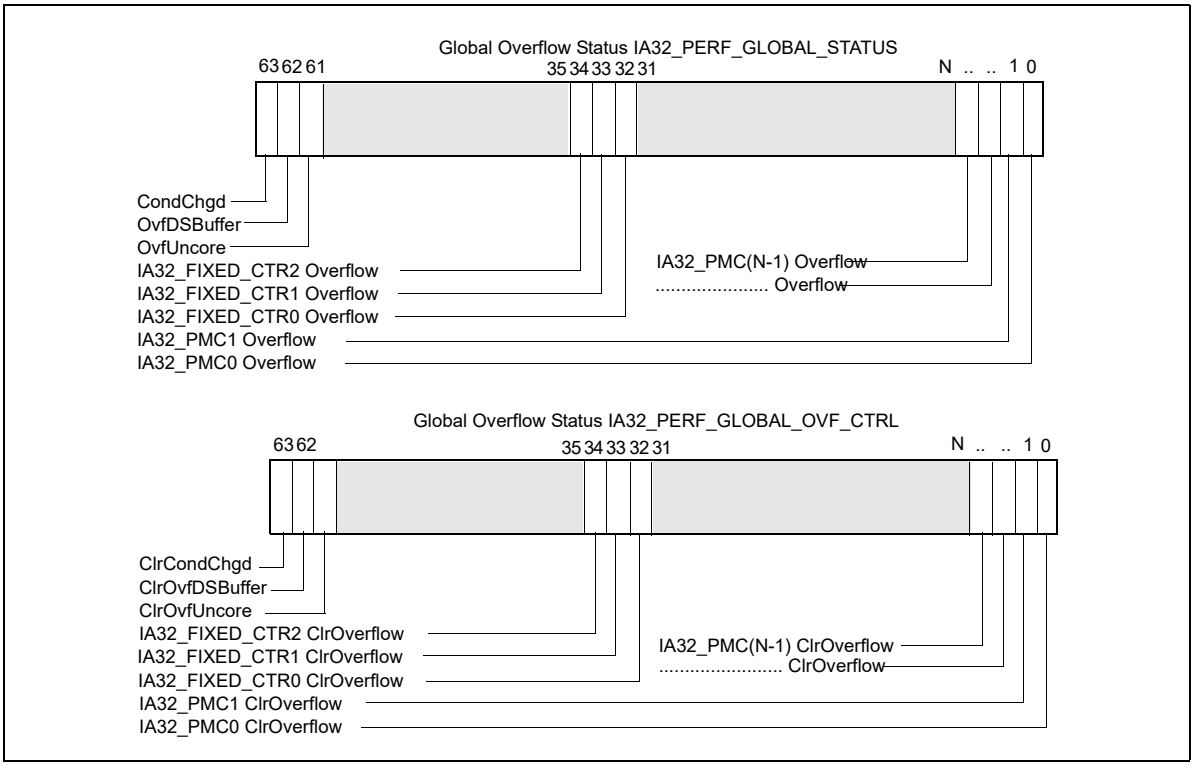

Figure 20-9. Global Performance Monitoring Overflow Status and Control MSRs

20.2.3.1 AnyThread Counting and Software Evolution

The motivation for characterizing software workload over multiple software threads running on multiple logical processors of the same processor core originates from a time earlier than the introduction of the AnyThread interface in IA32_PERFEVTSELx and IA32_FIXED_CTR_CTRL. While AnyThread counting provides some benefits in simple software environments of an earlier era, the evolution contemporary software environments introduce certain concepts and pre-requisites that AnyThread counting does not comply with.

One example is the proliferation of software environments that support multiple virtual machines (VM) under VMX (see Chapter 24, "Introduction to Virtual-Machine Extensions") where each VM represents a domain separated from one another.

A Virtual Machine Monitor (VMM) that manages the VMs may allow an individual VM to employ performance monitoring facilities to profiles the performance characteristics of a workload. The use of the Anythread interface in IA32_PERFEVTSELx and IA32_FIXED_CTR_CTRL is discouraged with software environments supporting virtualization or requiring domain separation.

Specifically, Intel recommends VMM:

- Configure the MSR bitmap to cause VM-exits for WRMSR to IA32_PERFEVTSELx and IA32_FIXED_CTR_CTRL in VMX non-Root operation (see CHAPTER 25 for additional information),
- Clear the AnyThread bit of IA32_PERFEVTSELx and IA32_FIXED_CTR_CTRL in the MSR-load lists for VM exits and VM entries (see CHAPTER 25, CHAPTER 27, and CHAPTER 28).

Even when operating in simpler legacy software environments which might not emphasize the pre-requisites of a virtualized software environment, the use of the AnyThread interface should be moderated and follow any event-specific guidance where explicitly noted.

20.2.4 Architectural Performance Monitoring Version 4

Processors supporting architectural performance monitoring version 4 also supports version 1, 2, and 3, as well as capability enumerated by CPUID leaf 0AH. Version 4 introduced a streamlined PMI overhead mitigation interface that replaces the legacy semantic behavior but retains the same control interface in IA32_DEBUGCTL.Freeze_LBRs_On_PMI and Freeze_PerfMon_On_PMI. Specifically version 4 provides the following enhancements:

- New indicators (LBR_FRZ, CTR_FRZ) in IA32_PERF_GLOBAL_STATUS, see Section 20.2.4.1.
- Streamlined Freeze/PMI Overhead management interfaces to use IA32_DEBUGCTL.Freeze_LBRs_On_PMI and IA32_DEBUGCTL.Freeze_PerfMon_On_PMI: see Section 20.2.4.1. Legacy semantics of Freeze_LBRs_On_PMI and Freeze_PerfMon_On_PMI (applicable to version 2 and 3) are not supported with version 4 or higher.
- Fine-grain separation of control interface to manage overflow/status of IA32_PERF_GLOBAL_STATUS and read-only performance counter enabling interface in IA32_PERF_GLOBAL_STATUS: see Section 20.2.4.2.
- Performance monitoring resource in-use MSR to facilitate cooperative sharing protocol between perfmon-managing privilege agents.

20.2.4.1 Enhancement in IA32_PERF_GLOBAL_STATUS

The IA32_PERF_GLOBAL_STATUS MSR provides the following indicators with architectural performance monitoring version 4:

- IA32_PERF_GLOBAL_STATUS.LBR_FRZ[bit 58]: This bit is set due to the following conditions:
  - IA32_DEBUGCTL.FREEZE_LBR_ON_PMI has been set by the profiling agent, and
  - A performance counter, configured to generate PMI, has overflowed to signal a PMI. Consequently the LBR stack is frozen.

  Effectively, the IA32_PERF_GLOBAL_STATUS.LBR_FRZ bit also serves as a control to enable capturing data in the LBR stack. To enable capturing LBR records, the following expression must hold with architectural perfmon version 4 or higher:
  - (IA32_DEBUGCTL.LBR & (!IA32_PERF_GLOBAL_STATUS.LBR_FRZ)) =1

- IA32_PERF_GLOBAL_STATUS.CTR_FRZ[bit 59]: This bit is set due to the following conditions:
  - — IA32_DEBUGCTL.FREEZE_PERFMON_ON_PMI has been set by the profiling agent, and
  - — A performance counter, configured to generate PMI, has overflowed to signal a PMI. Consequently, all the performance counters are frozen.

  Effectively, the IA32_PERF_GLOBAL_STATUS.CTR_FRZ bit also serve as an read-only control to enable programmable performance counters and fixed counters in the core PMU. To enable counting with the performance counters, the following expression must hold with architectural perfmon version 4 or higher:
    - (IA32_PERFEVTSELn.EN & IA32_PERF_GLOBAL_CTRL.PMCn & (!IA32_PERF_GLOBAL_STATUS.CTR_FRZ)) = 1 for programmable counter ‘n’, or
    - (IA32_PERF_FIXED_CRTL.ENi & IA32_PERF_GLOBAL_CTRL.FCi & (!IA32_PERF_GLOBAL_STATUS.CTR_FRZ)) = 1 for fixed counter ‘i’

The read-only enable interface IA32_PERF_GLOBAL_STATUS.CTR_FRZ provides a more efficient flow for a PMI handler to use IA32_DEBUGCTL.Freeze_Perfmon_On_PMI to filter out data that may distort target workload analysis, see Table 18-3. It should be noted the IA32_PERF_GLOBAL_CTRL register continue to serve as the primary interface to control all performance counters of the logical processor.

For example, when the Freeze-On-PMI mode is not being used, a PMI handler would be setting IA32_PERF_GLOBAL_CTRL as the very last step to commence the overall operation after configuring the individual counter registers, controls, and PEBS facility. This does not only assure atomic monitoring but also avoids unnecessary complications (e.g., race conditions) when software attempts to change the core PMU configuration while some counters are kept enabled.

Additionally, IA32_PERF_GLOBAL_STATUS.TraceToPAPMI[bit 55]: On processors that support Intel Processor Trace and configured to store trace output packets to physical memory using the ToPA scheme, bit 55 is set when a PMI occurred due to a ToPA entry memory buffer was completely filled.

IA32_PERF_GLOBAL_STATUS also provides an indicator to distinguish interaction of performance monitoring operations with other side-band activities, which apply Intel SGX on processors that support SGX (For additional information about Intel SGX, see the *Intel® 64 and IA-32 Architectures Software Developer’s Manual, Volume 3D*):

- IA32_PERF_GLOBAL_STATUS.ASCI[bit 60]: This bit is set when data accumulated in any of the configured performance counters (i.e., IA32_PMCx or IA32_FIXED_CTRx) may include contributions from direct or indirect operation of Intel SGX to protect an enclave (since the last time IA32_PERF_GLOBAL_STATUS.ASCI was cleared).

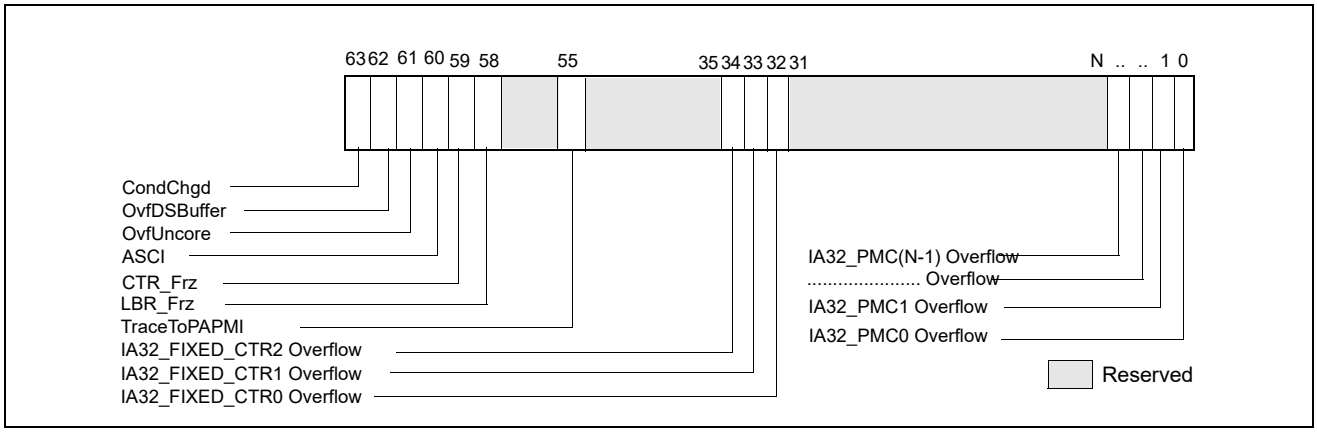

Figure 20-10. IA32_PERF_GLOBAL_STATUS MSR and Architectural Perfmon Version 4

Note, a processor’s support for IA32_PERF_GLOBAL_STATUS.TraceToPAPMI[bit 55] is enumerated as a result of CPUID enumerated capability of Intel Processor Trace and the use of the ToPA buffer scheme. Support of IA32_PERF_GLOBAL_STATUS.ASCI[bit 60] is enumerated by the CPUID enumeration of Intel SGX.

20.2.4.2 IA32_PERF_GLOBAL_STATUS_RESET and IA32_PERF_GLOBAL_STATUS_SET MSRS

With architectural performance monitoring version 3 and lower, clearing of the set bits in IA32_PERF_GLOBAL_STATUS MSR by software is done via IA32_PERF_GLOBAL_OVF_CTRL MSR. Starting with architectural performance monitoring version 4, software can manage the overflow and other indicators in IA32_PERF_GLOBAL_STATUS using separate interfaces to set or clear individual bits.

The address and the architecturally-defined bits of IA32_PERF_GLOBAL_OVF_CTRL is inherited by IA32_PERF_GLOBAL_STATUS_RESET (see Figure 20-11). Further, IA32_PERF_GLOBAL_STATUS_RESET provides additional bit fields to clear the new indicators in IA32_PERF_GLOBAL_STATUS described in Section 20.2.4.1.

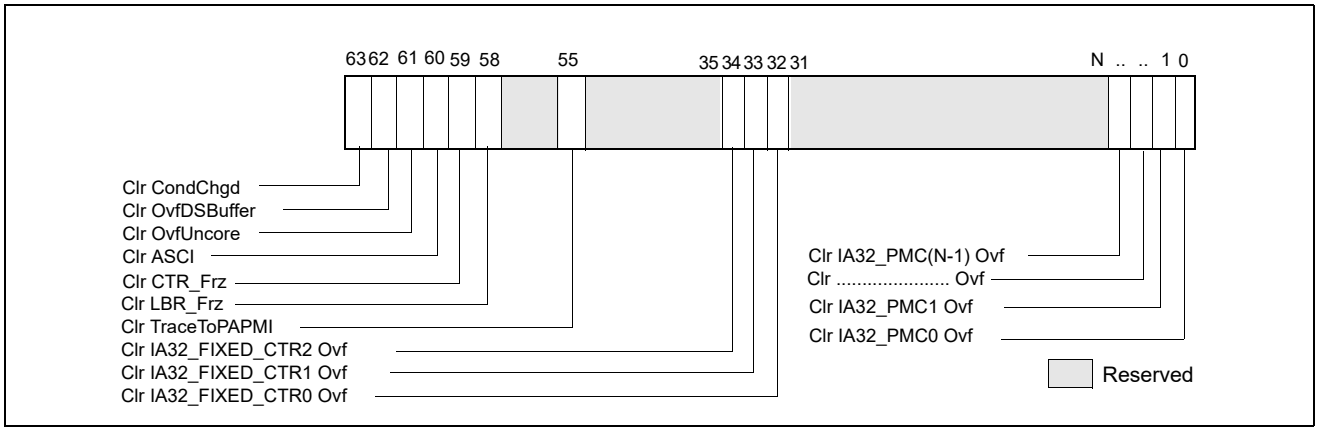

Figure 20-11. IA32_PERF_GLOBAL_STATUS_RESET MSR and Architectural Perfmon Version 4

The IA32_PERF_GLOBAL_STATUS_SET MSR is introduced with architectural performance monitoring version 4. It allows software to set individual bits in IA32_PERF_GLOBAL_STATUS. The IA32_PERF_GLOBAL_STATUS_SET interface can be used by a VMM to virtualize the state of IA32_PERF_GLOBAL_STATUS across VMs.

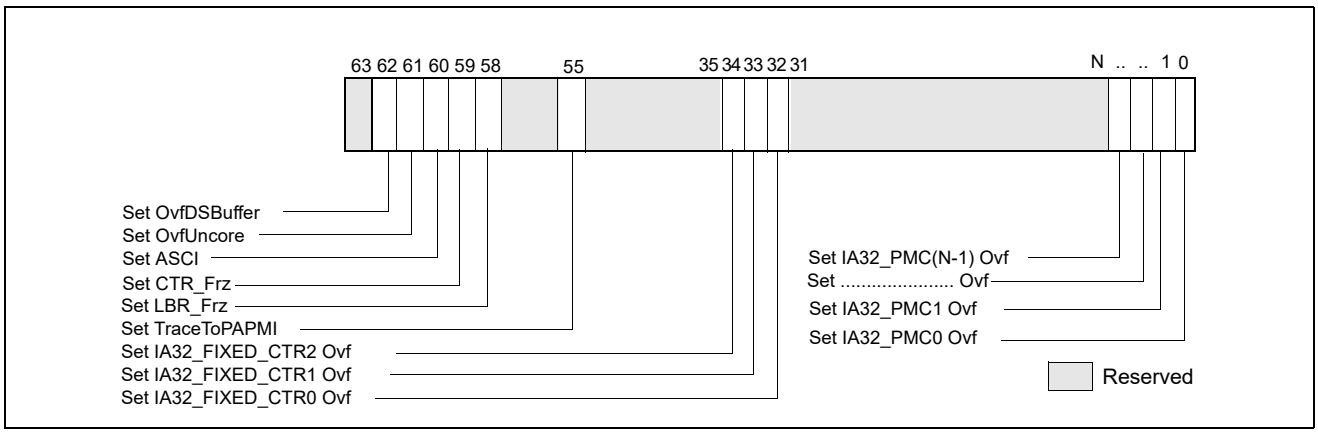

Figure 20-12. IA32_PERF_GLOBAL_STATUS_SET MSR and Architectural Perfmon Version 4

20.2.4.3 IA32_PERF_GLOBAL_INUSE MSR

In a contemporary software environment, multiple privileged service agents may wish to employ the processor's performance monitoring facilities. The IA32_MISC_ENABLE.PERFMON_AVAILABLE[bit 7] interface could not serve

the need of multiple agent adequately. A white paper, "Performance Monitoring Unit Sharing Guideline"[1], proposed a cooperative sharing protocol that is voluntary for participating software agents.

Architectural performance monitoring version 4 introduces a new MSR, IA32_PERF_GLOBAL_INUSE, that simplifies the task of multiple cooperating agents to implement the sharing protocol.

The layout of IA32_PERF_GLOBAL_INUSE is shown in Figure 20-13.

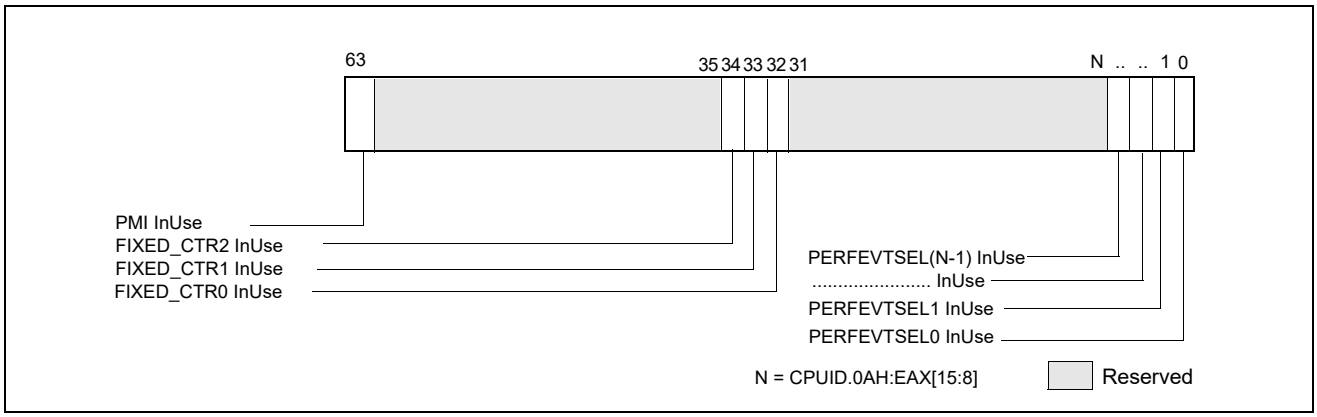

Figure 20-13. IA32_PERF_GLOBAL_INUSE MSR and Architectural Perfmon Version 4

The IA32_PERF_GLOBAL_INUSE MSR provides an "InUse" bit for each programmable performance counter and fixed counter in the processor. Additionally, it includes an indicator if the PMI mechanism has been configured by a profiling agent.

- IA32_PERF_GLOBAL_INUSE.PERFEVTSEL0_InUse[bit 0]: This bit reflects the logical state of (IA32_PERFEVTSEL0[7:0] != 0).
- IA32_PERF_GLOBAL_INUSE.PERFEVTSEL1_InUse[bit 1]: This bit reflects the logical state of (IA32_PERFEVTSEL1[7:0] != 0).
- IA32_PERF_GLOBAL_INUSE.PERFEVTSEL2_InUse[bit 2]: This bit reflects the logical state of (IA32_PERFEVTSEL2[7:0] != 0).
- IA32_PERF_GLOBAL_INUSE.PERFEVTSELn_InUse[bit n]: This bit reflects the logical state of (IA32_PERFEVTSELn[7:0] != 0), n < CPUID.0AH:EAX[15:8].
- IA32_PERF_GLOBAL_INUSE.FC0_InUse[bit 32]: This bit reflects the logical state of (IA32_FIXED_CTR_CTRL[1:0] != 0).
- IA32_PERF_GLOBAL_INUSE.FC1_InUse[bit 33]: This bit reflects the logical state of (IA32_FIXED_CTR_CTRL[5:4] != 0).
- IA32_PERF_GLOBAL_INUSE.FC2_InUse[bit 34]: This bit reflects the logical state of (IA32_FIXED_CTR_CTRL[9:8] != 0).
- IA32_PERF_GLOBAL_INUSE.PMI_InUse[bit 63]: This bit is set if any one of the following bit is set:
  - IA32_PERFEVTSELn.INT[bit 20], n < CPUID.0AH:EAX[15:8].
  - IA32_FIXED_CTR_CTRL.ENi_PMI, i = 0, 1, 2.
  - Any IA32_PEBS_ENABLES bit which enables PEBS for a general-purpose or fixed-function performance counter.

1. Available at http://www.intel.com/sdm

20.2.5 Architectural Performance Monitoring Version 5

Processors supporting architectural performance monitoring version 5 also support versions 1, 2, 3, and 4, as well as capability enumerated by CPUID leaf 0AH. Specifically, version 5 provides the following enhancements:

- Deprecation of AnyThread mode, see Section 20.2.5.1.
- Individual enumeration of Fixed counters in CPUID.0AH, see Section 20.2.5.2.
- Domain separation, see Section 20.2.5.3.

20.2.5.1 AnyThread Mode Deprecation

With Architectural Performance Monitoring Version 5, a processor that supports AnyThread mode deprecation is enumerated by CPUID.0AH.EDX[15]. If set, software will not have to follow guidelines in Section 20.2.3.1.

20.2.5.2 Fixed Counter Enumeration

With Architectural Performance Monitoring Version 5, register CPUID.0AH.ECX indicates Fixed Counter enumeration. It is a bit mask which enumerates the supported Fixed Counters in a processor. If bit 'i' is set, it implies that Fixed Counter 'i' is supported. Software is recommended to use the following logic to check if a Fixed Counter is supported on a given processor:

FxCtr[i]_is_supported := ECX[i] || (EDX[4:0] > i);

20.2.5.3 Domain Separation

When the INV flag in IA32_PERFEVTSELx is used, a counter stops counting when the logical processor exits the C0 ACPI C-state.

20.2.6 Full-Width Writes to Performance Counter Registers

The general-purpose performance counter registers IA32_PMCx are writable via WRMSR instruction. However, the value written into IA32_PMCx by WRMSR is the signed extended 64-bit value of the EAX[31:0] input of WRMSR.

A processor that supports full-width writes to the general-purpose performance counters enumerated by CPUID.0AH:EAX[15:8] will set IA32_PERF_CAPABILITIES[13] to enumerate its full-width-write capability See Figure 20-65.

If IA32_PERF_CAPABILITIES.FW_WRITE[bit 13] =1, each IA32_PMCi is accompanied by a corresponding alias address starting at 4C1H for IA32_A_PMC0.

The bit width of the performance monitoring counters is specified in CPUID.0AH:EAX[23:16].

If IA32_A_PMCi is present, the 64-bit input value (EDX:EAX) of WRMSR to IA32_A_PMCi will cause IA32_PMCi to be updated by:

COUNTERWIDTH = CPUID.0AH:EAX[23:16] bit width of the performance monitoring counter
IA32_PMCi[COUNTERWIDTH-1:32] := EDX[COUNTERWIDTH-33:0]);
IA32_PMCi[31:0] := EAX[31:0];
EDX[63:COUNTERWIDTH] are reserved

20.3 PERFORMANCE MONITORING (INTEL® CORE™ PROCESSORS AND INTEL® XEON® PROCESSORS)

20.3.1 Performance Monitoring for Processors Based on Nehalem Microarchitecture

Intel Core i7 processor family[1] supports architectural performance monitoring capability with version ID 3 (see Section 20.2.3) and a host of non-architectural monitoring capabilities. The Intel Core i7 processor family is based

on Nehalem microarchitecture, and provides four general-purpose performance counters (IA32_PMC0, IA32_PMC1, IA32_PMC2, IA32_PMC3) and three fixed-function performance counters (IA32_FIXED_CTR0, IA32_FIXED_CTR1, IA32_FIXED_CTR2) in the processor core.

Non-architectural performance monitoring in Intel Core i7 processor family uses the IA32_PERFEVTSELx MSR to configure a set of non-architecture performance monitoring events to be counted by the corresponding general-purpose performance counter. The list of non-architectural performance monitoring events can be found at: https://perfmon-events.intel.com/. Non-architectural performance monitoring events fall into two broad categories:

- Performance monitoring events in the processor core: These include many events that are similar to performance monitoring events available to processor based on Intel Core microarchitecture. Additionally, there are several enhancements in the performance monitoring capability for detecting microarchitectural conditions in the processor core or in the interaction of the processor core to the off-core sub-systems in the physical processor package. The off-core sub-systems in the physical processor package is loosely referred to as "uncore".
- Performance monitoring events in the uncore: The uncore sub-system is shared by more than one processor cores in the physical processor package. It provides additional performance monitoring facility outside of IA32_PMCx and performance monitoring events that are specific to the uncore sub-system.

Architectural and non-architectural performance monitoring events in Intel Core i7 processor family support thread qualification using bit 21 of IA32_PERFEVTSELx MSR.

The bit fields within each IA32_PERFEVTSELx MSR are defined in Figure 20-6 and described in Section 20.2.1.1 and Section 20.2.3.

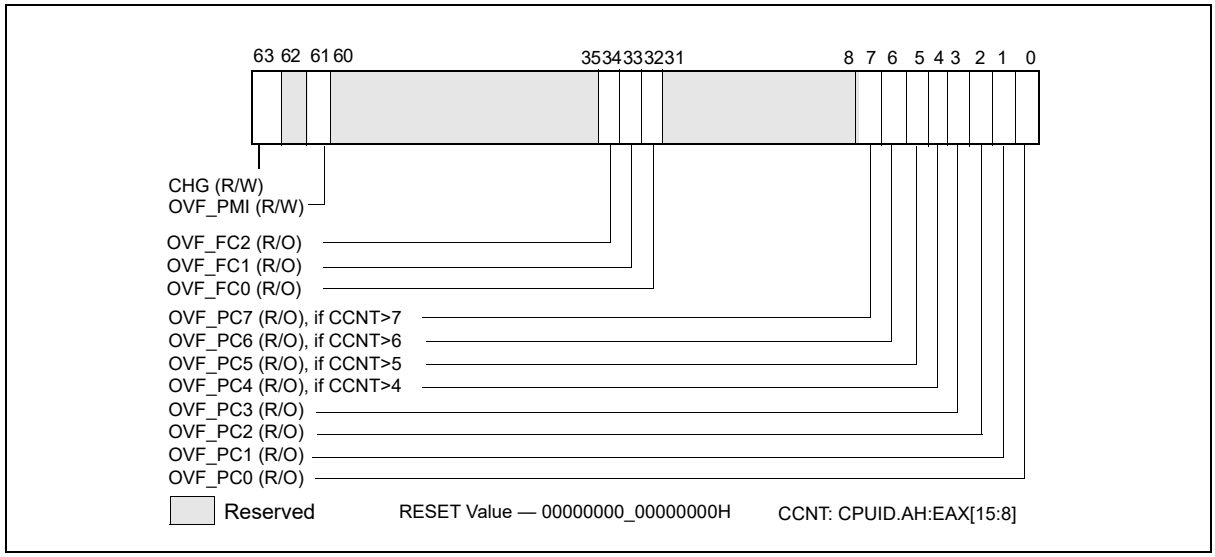

Figure 20-14. IA32_PERF_GLOBAL_STATUS MSR

20.3.1.1 Enhancements of Performance Monitoring in the Processor Core

The notable enhancements in the monitoring of performance events in the processor core include:

- Four general purpose performance counters, IA32_PMCx, associated counter configuration MSRs, IA32_PERFEVTSELx, and global counter control MSR supporting simplified control of four counters. Each of the four performance counter can support processor event based sampling (PEBS) and thread-qualification of architectural and non-architectural performance events. Width of IA32_PMCx supported by hardware has been increased. The width of counter reported by CPUID.0AH:EAX[23:16] is 48 bits. The PEBS facility in Nehalem

1. Intel Xeon processor 5500 series and 3400 series are also based on Nehalem microarchitecture; the performance monitoring facilities described in this section generally also apply.

microarchitecture has been enhanced to include new data format to capture additional information, such as load latency.

- Load latency sampling facility. Average latency of memory load operation can be sampled using load-latency facility in processors based on Nehalem microarchitecture. This field measures the load latency from load's first dispatch of till final data writeback from the memory subsystem. The latency is reported for retired demand load operations and in core cycles (it accounts for re-dispatches). This facility is used in conjunction with the PEBS facility.
- Off-core response counting facility. This facility in the processor core allows software to count certain transaction responses between the processor core to sub-systems outside the processor core (uncore). Counting off-core response requires additional event qualification configuration facility in conjunction with IA32_PERFEVTSELx. Two off-core response MSRs are provided to use in conjunction with specific event codes that must be specified with IA32_PERFEVTSELx.

NOTE

The number of counters available to software may vary from the number of physical counters present on the hardware, because an agent running at a higher privilege level (e.g., a VMM) may not expose all counters. CPUID.0AH:EAX[15:8] reports the MSRs available to software; see Section 20.2.1.

20.3.1.1.1 Processor Event Based Sampling (PEBS)

All general-purpose performance counters, IA32_PMCx, can be used for PEBS if the performance event supports PEBS. Software uses IA32_MISC_ENABLE[7] and IA32_MISC_ENABLE[12] to detect whether the performance monitoring facility and PEBS functionality are supported in the processor. The MSR IA32_PEBS_ENABLE provides 4 bits that software must use to enable which IA32_PMCx overflow condition will cause the PEBS record to be captured.

Additionally, the PEBS record is expanded to allow latency information to be captured. The MSR IA32_PEBS_ENABLE provides 4 additional bits that software must use to enable latency data recording in the PEBS record upon the respective IA32_PMCx overflow condition. The layout of IA32_PEBS_ENABLE for processors based on Nehalem microarchitecture is shown in Figure 20-15.

When a counter is enabled to capture machine state (PEBS_EN_PMCx = 1), the processor will write machine state information to a memory buffer specified by software as detailed below. When the counter IA32_PMCx overflows from maximum count to zero, the PEBS hardware is armed.

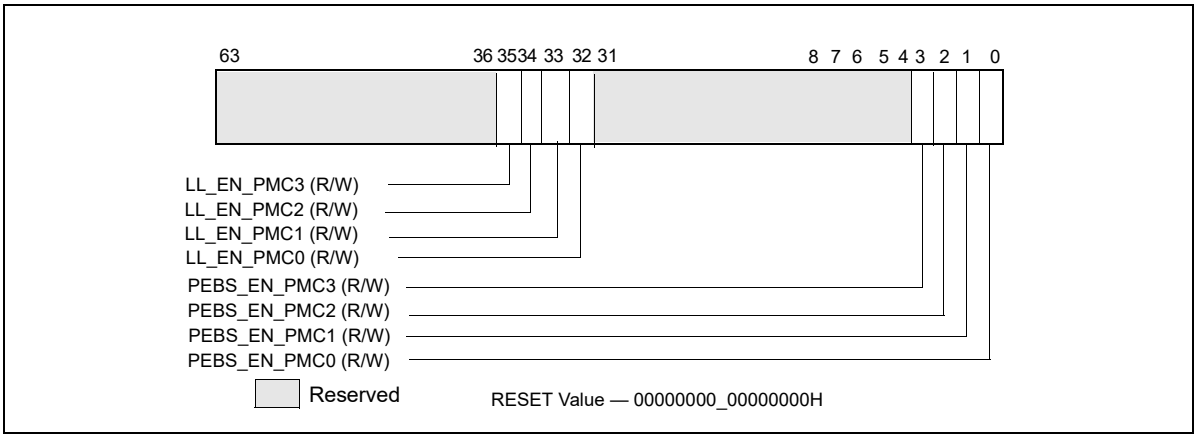

Figure 20-15. Layout of IA32_PEBS_ENABLE MSR

Upon occurrence of the next PEBS event, the PEBS hardware triggers an assist and causes a PEBS record to be written. The format of the PEBS record is indicated by the bit field IA32_PERF_CAPABILITIES[11:8] (see Figure 20-65).

The behavior of PEBS assists is reported by IA32_PERF_CAPABILITIES[6] (see Figure 20-65). The return instruction pointer (RIP) reported in the PEBS record will point to the instruction after (+1) the instruction that causes the PEBS assist. The machine state reported in the PEBS record is the machine state after the instruction that causes the PEBS assist is retired. For instance, if the instructions:

mov eax, [eax] ; causes PEBS assist

nop

are executed, the PEBS record will report the address of the nop, and the value of EAX in the PEBS record will show the value read from memory, not the target address of the read operation.

The PEBS record format is shown in Table 20-3, and each field in the PEBS record is 64 bits long. The PEBS record format, along with debug/store area storage format, does not change regardless of IA-32e mode is active or not. CPUID.01H:ECX.DTES64[bit 2] reports whether the processor's DS storage format support is mode-independent. When set, it uses 64-bit DS storage format.

Table 20-3. PEBS Record Format for Intel Core i7 Processor Family

Byte Offset	Field	Byte Offset	Field
00H	R/EFLAGS	58H	R9
08H	R/EIP	60H	R10
10H	R/EAX	68H	R11
18H	R/EBX	70H	R12
20H	R/ECX	78H	R13
28H	R/EDX	80H	R14
30H	R/ESI	88H	R15
38H	R/EDI	90H	IA32_PERF_GLOBAL_STATUS
40H	R/EBP	98H	Data Linear Address
48H	R/ESP	A0H	Data Source Encoding
50H	R8	A8H	Latency value (core cycles)

In IA-32e mode, the full 64-bit value is written to the register. If the processor is not operating in IA-32e mode, 32-bit value is written to registers with bits 63:32 zeroed. Registers not defined when the processor is not in IA-32e mode are written to zero.

Bytes AFH:90H are enhancement to the PEBS record format. Support for this enhanced PEBS record format is indicated by IA32_PERF_CAPABILITIES[11:8] encoding of 0001B.

The value written to bytes 97H:90H is the state of the IA32_PERF_GLOBAL_STATUS register before the PEBS assist occurred. This value is written so software can determine which counters overflowed when this PEBS record was written. Note that this field indicates the overflow status for all counters, regardless of whether they were programmed for PEBS or not.

Programming PEBS Facility

Only a subset of non-architectural performance events in the processor support PEBS. The subset of precise events are listed in Table 20-84. In addition to using IA32_PERFEVTSELx to specify event unit/mask settings and setting the EN_PMCx bit in the IA32_PEBS_ENABLE register for the respective counter, the software must also initialize the DS_BUFFER_MANAGEMENT_AREA data structure in memory to support capturing PEBS records for precise events.

The recording of PEBS records may not operate properly if accesses to the linear addresses in the DS buffer management area or in the PEBS buffer (see below) cause page faults, VM exits, or the setting of accessed or dirty flags in the paging structures (ordinary or EPT). For that reason, system software should establish paging structures (both ordinary and EPT) to prevent such occurrences. Implications of this may be that an operating system should allocate this memory from a non-paged pool and that system software cannot do “lazy” page-table entry propagation for these pages. A virtual-machine monitor may choose to allow use of PEBS by guest software only if EPT maps all guest-physical memory as present and read/write.

NOTE

PEBS events are only valid when the following fields of IA32_PERFEVTSELx are all zero: AnyThread, Edge, Invert, CMask.

The beginning linear address of the DS_BUFFER_MANAGEMENT_AREA data structure must be programmed into the IA32_DS_AREA register. The layout of the DS_BUFFER_MANAGEMENT_AREA is shown in Figure 20-16.

- **PEBS Buffer Base**: This field is programmed with the linear address of the first byte of the PEBS buffer allocated by software. The processor reads this field to determine the base address of the PEBS buffer.
- **PEBS Index**: This field is initially programmed with the same value as the PEBS Buffer Base field, or the beginning linear address of the PEBS buffer. The processor reads this field to determine the location of the next PEBS record to write to. After a PEBS record has been written, the processor also updates this field with the address of the next PEBS record to be written. The figure above illustrates the state of PEBS Index after the first PEBS record is written.
- **PEBS Absolute Maximum**: This field represents the absolute address of the maximum length of the allocated PEBS buffer plus the starting address of the PEBS buffer. The processor will not write any PEBS record beyond the end of PEBS buffer, when **PEBS Index** equals **PEBS Absolute Maximum**. No signaling is generated when PEBS buffer is full. Software must reset the **PEBS Index** field to the beginning of the PEBS buffer address to continue capturing PEBS records.

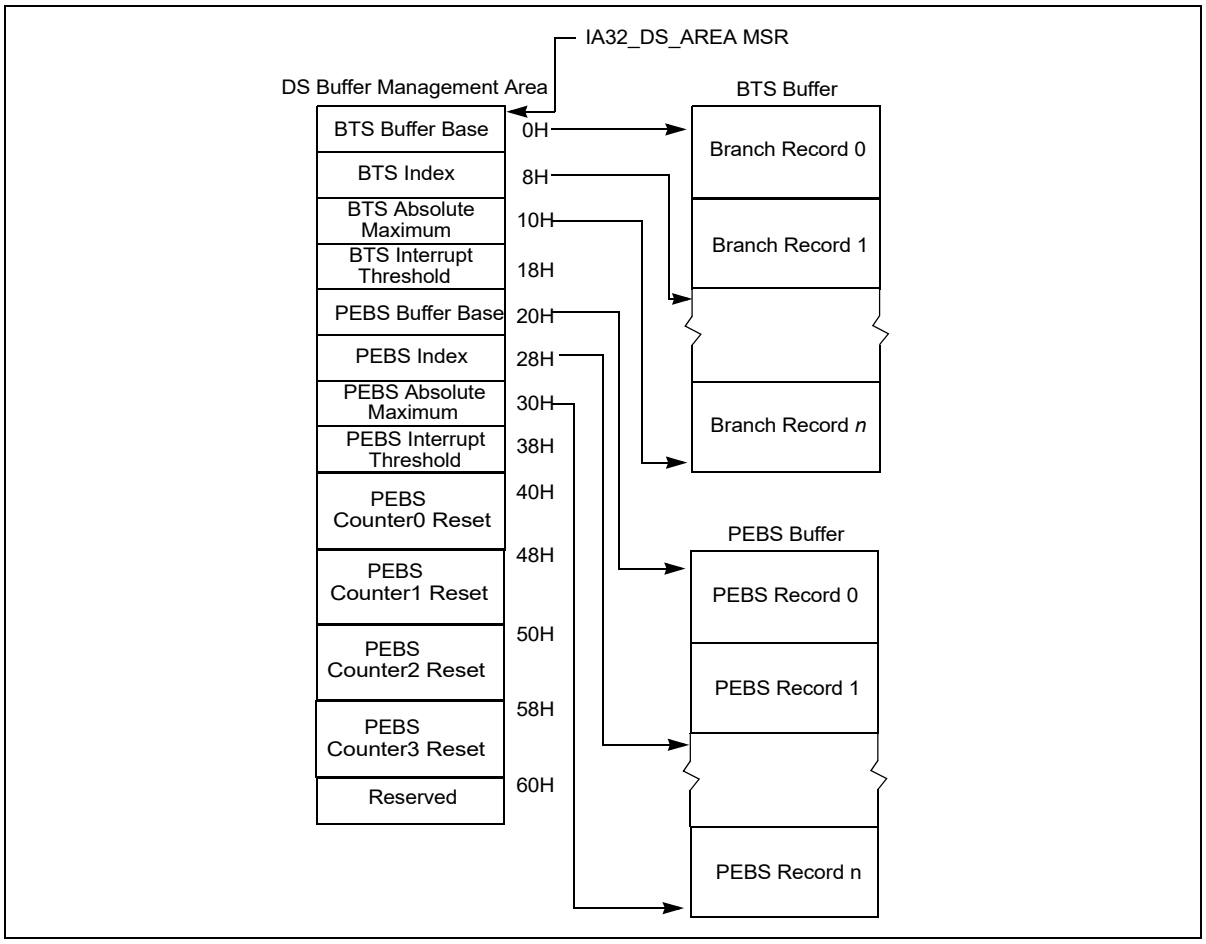

Figure 20-16. PEBS Programming Environment

- **PEBS Interrupt Threshold**: This field specifies the threshold value to trigger a performance interrupt and notify software that the PEBS buffer is nearly full. This field is programmed with the linear address of the first byte of the PEBS record within the PEBS buffer that represents the threshold record. After the processor writes a PEBS record and updates **PEBS Index**, if the **PEBS Index** reaches the threshold value of this field, the processor will generate a performance interrupt. This is the same interrupt that is generated by a performance counter overflow, as programmed in the Performance Monitoring Counters vector in the Local Vector Table of the Local APIC. When a performance interrupt due to PEBS buffer full is generated, the IA32_PERF_GLOBAL_STATUS.PEBS_Ovf bit will be set.
- **PEBS CounterX Reset**: This field allows software to set up PEBS counter overflow condition to occur at a rate useful for profiling workload, thereby generating multiple PEBS records to facilitate characterizing the profile the execution of test code. After each PEBS record is written, the processor checks each counter to see if it overflowed and was enabled for PEBS (the corresponding bit in IA32_PEBS_ENABLED was set). If these conditions are met, then the reset value for each overflowed counter is loaded from the DS Buffer Management Area. For example, if counter IA32_PMC0 caused a PEBS record to be written, then the value of "PEBS Counter 0 Reset" would be written to counter IA32_PMC0. If a counter is not enabled for PEBS, its value will not be modified by the PEBS assist.

Performance Counter Prioritization

Performance monitoring interrupts are triggered by a counter transitioning from maximum count to zero (assuming IA32_PerfEvtSelX.INT is set). This same transition will cause PEBS hardware to arm, but not trigger. PEBS hardware triggers upon detection of the first PEBS event after the PEBS hardware has been armed (a 0 to 1 transition of the counter). At this point, a PEBS assist will be undertaken by the processor.

Performance counters (fixed and general-purpose) are prioritized in index order. That is, counter IA32_PMC0 takes precedence over all other counters. Counter IA32_PMC1 takes precedence over counters IA32_PMC2 and IA32_PMC3, and so on. This means that if simultaneous overflows or PEBS assists occur, the appropriate action will be taken for the highest priority performance counter. For example, if IA32_PMC1 cause an overflow interrupt and IA32_PMC2 causes an PEBS assist simultaneously, then the overflow interrupt will be serviced first.

The PEBS threshold interrupt is triggered by the PEBS assist, and is by definition prioritized lower than the PEBS assist. Hardware will not generate separate interrupts for each counter that simultaneously overflows. General-purpose performance counters are prioritized over fixed counters.

If a counter is programmed with a precise (PEBS-enabled) event and programmed to generate a counter overflow interrupt, the PEBS assist is serviced before the counter overflow interrupt is serviced. If in addition the PEBS interrupt threshold is met, the

threshold interrupt is generated after the PEBS assist completes, followed by the counter overflow interrupt (two separate interrupts are generated).

Uncore counters may be programmed to interrupt one or more processor cores (see Section 20.3.1.2). It is possible for interrupts posted from the uncore facility to occur coincident with counter overflow interrupts from the processor core. Software must check core and uncore status registers to determine the exact origin of counter overflow interrupts.

20.3.1.1.2 Load Latency Performance Monitoring Facility

The load latency facility provides software a means to characterize the average load latency to different levels of cache/memory hierarchy. This facility requires processor supporting enhanced PEBS record format in the PEBS buffer, see Table 20-3. This field measures the load latency from load's first dispatch of till final data writeback from the memory subsystem. The latency is reported for retired demand load operations and in core cycles (it accounts for re-dispatches).

To use this feature software must assure:

- One of the IA32_PERFEVTSELx MSR is programmed to specify the event unit MEM_INST_RETIRED, and the LATENCY_ABOVE_THRESHOLD event mask must be specified (IA32_PerfEvtSelX[15:0] = 100H). The corresponding counter IA32_PMCx will accumulate event counts for architecturally visible loads which exceed the programmed latency threshold specified separately in a MSR. Stores are ignored when this event is programmed. The CMASK or INV fields of the IA32_PerfEvtSelX register used for counting load latency must be 0. Writing other values will result in undefined behavior.

- The MSR_PEBS_LD_LAT_THRESHOLD MSR is programmed with the desired latency threshold in core clock cycles. Loads with latencies greater than this value are eligible for counting and latency data reporting. The minimum value that may be programmed in this register is 3 (the minimum detectable load latency is 4 core clock cycles).
- The PEBS enable bit in the IA32_PEBS_ENABLE register is set for the corresponding IA32_PMCx counter register. This means that both the PEBS_EN_CTRX and LL_EN_CTRX bits must be set for the counter(s) of interest. For example, to enable load latency on counter IA32_PMC0, the IA32_PEBS_ENABLE register must be programmed with the 64-bit value 00000001_00000001H.

When the load-latency facility is enabled, load operations are randomly selected by hardware and tagged to carry information related to data source locality and latency. Latency and data source information of tagged loads are updated internally.

When a PEBS assist occurs, the last update of latency and data source information are captured by the assist and written as part of the PEBS record. The PEBS sample after value (SAV), specified in PEBS CounterX Reset, operates orthogonally to the tagging mechanism. Loads are randomly tagged to collect latency data. The SAV controls the number of tagged loads with latency information that will be written into the PEBS record field by the PEBS assists. The load latency data written to the PEBS record will be for the last tagged load operation which retired just before the PEBS assist was invoked.

The load-latency information written into a PEBS record (see Table 20-3, bytes AFH:98H) consists of:

- **Data Linear Address**: This is the linear address of the target of the load operation.
- **Latency Value**: This is the elapsed cycles of the tagged load operation between dispatch to GO, measured in processor core clock domain.
- **Data Source:** The encoded value indicates the origin of the data obtained by the load instruction. The encoding is shown in Table 20-4. In the descriptions, local memory refers to system memory physically attached to a processor package, and remote memory refers to system memory physically attached to another processor package.

Table 20-4. Data Source Encoding for Load Latency Record

Encoding	Description
00H	Unknown L3 cache miss.
01H	Minimal latency core cache hit. This request was satisfied by the L1 data cache.
02H	Pending core cache HIT. Outstanding core cache miss to same cache-line address was already underway.
03H	This data request was satisfied by the L2.
04H	L3 HIT. Local or Remote home requests that hit L3 cache in the uncore with no coherency actions required (snooping).
05H	L3 HIT. Local or Remote home requests that hit the L3 cache and were serviced by another processor core with a cross core snoop where no modified copies were found. (clean).
06H	L3 HIT. Local or Remote home requests that hit the L3 cache and were serviced by another processor core with a cross core snoop where no modified copies were found.
07H[1]	Reserved/LLC Snoop HitM. Local or Remote home requests that hit the last level cache and were serviced by another core with a cross core snoop where modified copies were found.
08H	Reserved/L3 MISS. Local homed requests that missed the L3 cache and were serviced by forwarded data following a cross package snoop where no modified copies were found. (Remote home requests are not counted).
09H	Reserved
0AH	L3 MISS. Local home requests that missed the L3 cache and were serviced by local DRAM (go to shared state).
0BH	L3 MISS. Remote home requests that missed the L3 cache and were serviced by remote DRAM (go to shared state).
0CH	L3 MISS. Local home requests that missed the L3 cache and were serviced by local DRAM (go to exclusive state).
0DH	L3 MISS. Remote home requests that missed the L3 cache and were serviced by remote DRAM (go to exclusive state).
0EH	I/O, Request of input/output operation.
0FH	The request was to un-cacheable memory.

NOTES:

1. Bit 7 is supported only for processors with a CPUID DisplayFamily_DisplayModel signature of 06_2A, and 06_2E; otherwise it is reserved.

The layout of MSR_PEBS_LD_LAT_THRESHOLD is shown in Figure 20-17.

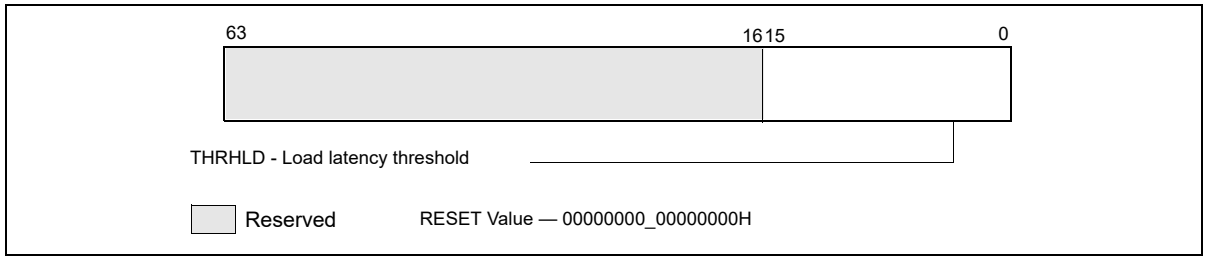

Figure 20-17. Layout of MSR_PEBS_LD_LAT MSR

Bits 15:0 specifies the threshold load latency in core clock cycles. Performance events with latencies greater than this value are counted in IA32_PMCx and their latency information is reported in the PEBS record. Otherwise, they are ignored. The minimum value that may be programmed in this field is 3.

20.3.1.1.3 Off-core Response Performance Monitoring in the Processor Core

Programming a performance event using the off-core response facility can choose any of the four IA32_PERFEVTSELx MSR with specific event codes and predefine mask bit value. Each event code for off-core response monitoring requires programming an associated configuration MSR, MSR_OFFCORE_RSP_0. There is only one off-core response configuration MSR. Table 20-5 lists the event code, mask value and additional off-core configuration MSR that must be programmed to count off-core response events using IA32_PMCx.

Table 20-5. Off-Core Response Event Encoding

Event code in IA32_PERFEVTSELx	**Mask Value in** IA32_PERFEVTSELx	**Required Off-core Response MSR**
B7H	01H	MSR_OFFCORE_RSP_0 (address 1A6H)

The layout of MSR_OFFCORE_RSP_0 is shown in Figure 20-18. Bits 7:0 specifies the request type of a transaction request to the uncore. Bits 15:8 specifies the response of the uncore subsystem.

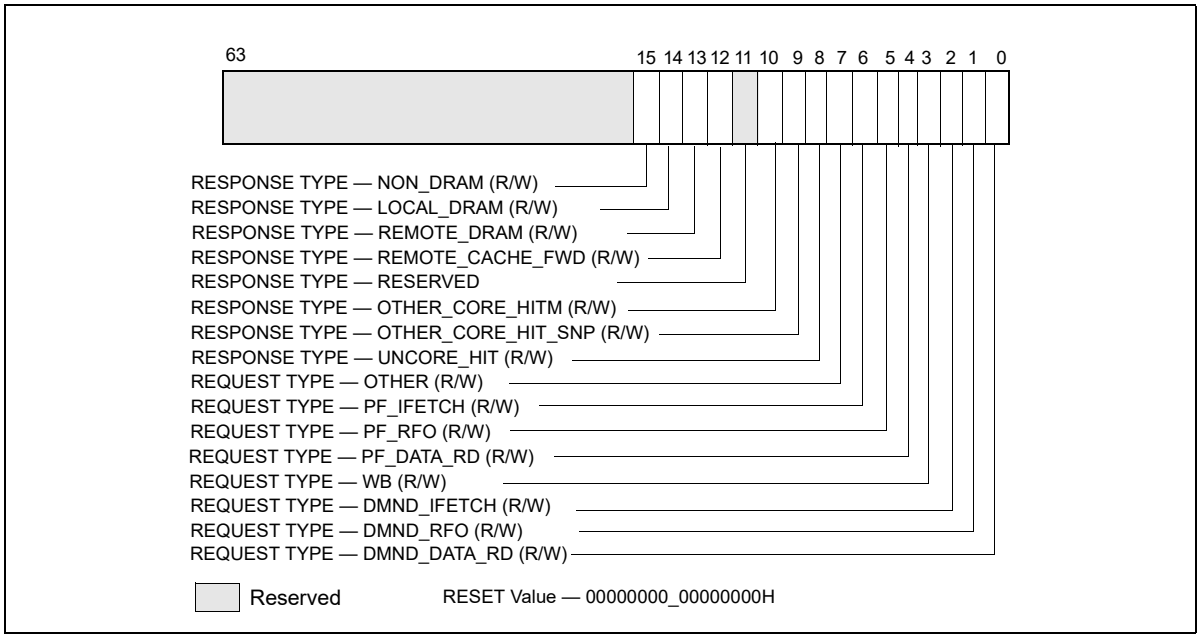

Figure 20-18. Layout of MSR_OFFCORE_RSP_0 and MSR_OFFCORE_RSP_1 to Configure Off-core Response Events

Table 20-6. MSR_OFFCORE_RSP_0 and MSR_OFFCORE_RSP_1 Bit Field Definition

Bit Name	Offset	Description
DMND_DATA_RD	0	Counts the number of demand and DCU prefetch data reads of full and partial cachelines as well as demand data page table entry cacheline reads. Does not count L2 data read prefetches or instruction fetches.
DMND_RFO	1	Counts the number of demand and DCU prefetch reads for ownership (RFO) requests generated by a write to data cacheline. Does not count L2 RFO.
DMND_IFETCH	2	Counts the number of demand instruction cacheline reads and L1 instruction cacheline prefetches.
WB	3	Counts the number of writeback (modified to exclusive) transactions.
PF_DATA_RD	4	Counts the number of data cacheline reads generated by L2 prefetchers.
PF_RFO	5	Counts the number of RFO requests generated by L2 prefetchers.
PF_IFETCH	6	Counts the number of code reads generated by L2 prefetchers.
OTHER	7	Counts one of the following transaction types, including L3 invalidate, I/O, full or partial writes, WC or non-temporal stores, CLFLUSH, Fences, lock, unlock, split lock.
UNCORE_HIT	8	L3 Hit: local or remote home requests that hit L3 cache in the uncore with no coherency actions required (snooping).
OTHER_CORE_HIT_SNP	9	L3 Hit: local or remote home requests that hit L3 cache in the uncore and was serviced by another core with a cross core snoop where no modified copies were found (clean).
OTHER_CORE_HITM	10	L3 Hit: local or remote home requests that hit L3 cache in the uncore and was serviced by another core with a cross core snoop where modified copies were found (HITM).
Reserved	11	Reserved
REMOTE_CACHE_FWD	12	L3 Miss: local homed requests that missed the L3 cache and was serviced by forwarded data following a cross package snoop where no modified copies found. (Remote home requests are not counted)
REMOTE_DRAM	13	L3 Miss: remote home requests that missed the L3 cache and were serviced by remote DRAM.
LOCAL_DRAM	14	L3 Miss: local home requests that missed the L3 cache and were serviced by local DRAM.

Table 20-6. MSR_OFFCORE_RSP_0 and MSR_OFFCORE_RSP_1 Bit Field Definition (Contd.)

Bit Name	Offset	Description
NON_DRAM	15	Non-DRAM requests that were serviced by IOH.

20.3.1.2 Performance Monitoring Facility in the Uncore

The "uncore" in Nehalem microarchitecture refers to subsystems in the physical processor package that are shared by multiple processor cores. Some of the sub-systems in the uncore include the L3 cache, Intel QuickPath Interconnect link logic, and integrated memory controller. The performance monitoring facilities inside the uncore operates in the same clock domain as the uncore (U-clock domain), which is usually different from the processor core clock domain. The uncore performance monitoring facilities described in this section apply to Intel Xeon processor 5500 series and processors with the following CPUID signatures: 06_1AH, 06_1EH, 06_1FH (see Chapter 2, "Model-Specific Registers (MSRs)" in the *Intel® 64 and IA-32 Architectures Software Developer's Manual, Volume 4*). An overview of the uncore performance monitoring facilities is described separately.

The performance monitoring facilities available in the U-clock domain consist of:

- Eight General-purpose counters (MSR_UNCORE_PerfCntr0 through MSR_UNCORE_PerfCntr7). The counters are 48 bits wide. Each counter is associated with a configuration MSR, MSR_UNCORE_PerfEvtSelx, to specify event code, event mask and other event qualification fields. A set of global uncore performance counter enabling/overflow/status control MSRs are also provided for software.
- Performance monitoring in the uncore provides an address/opcode match MSR that provides event qualification control based on address value or QPI command opcode.
- One fixed-function counter, MSR_UNCORE_FixedCntr0. The fixed-function uncore counter increments at the rate of the U-clock when enabled.

  The frequency of the uncore clock domain can be determined from the uncore clock ratio which is available in the PCI configuration space register at offset C0H under device number 0 and Function 0.

20.3.1.2.1 Uncore Performance Monitoring Management Facility

MSR_UNCORE_PERF_GLOBAL_CTRL provides bit fields to enable/disable general-purpose and fixed-function counters in the uncore. Figure 20-19 shows the layout of MSR_UNCORE_PERF_GLOBAL_CTRL for an uncore that is shared by four processor cores in a physical package.

- EN_PCn (bit n, n = 0, 7): When set, enables counting for the general-purpose uncore counter MSR_UNCORE_PerfCntr n.
- EN_FC0 (bit 32): When set, enables counting for the fixed-function uncore counter MSR_UNCORE_FixedCntr0.
- EN_PMI_COREn (bit n, n = 0, 3 if four cores are present): When set, processor core n is programmed to receive an interrupt signal from any interrupt enabled uncore counter. PMI delivery due to an uncore counter overflow is enabled by setting IA32_DEBUGCTL.Offcore_PMI_EN to 1.
- PMI_FRZ (bit 63): When set, all U-clock uncore counters are disabled when any one of them signals a performance interrupt. Software must explicitly re-enable the counter by setting the enable bits in MSR_UNCORE_PERF_GLOBAL_CTRL upon exit from the ISR.

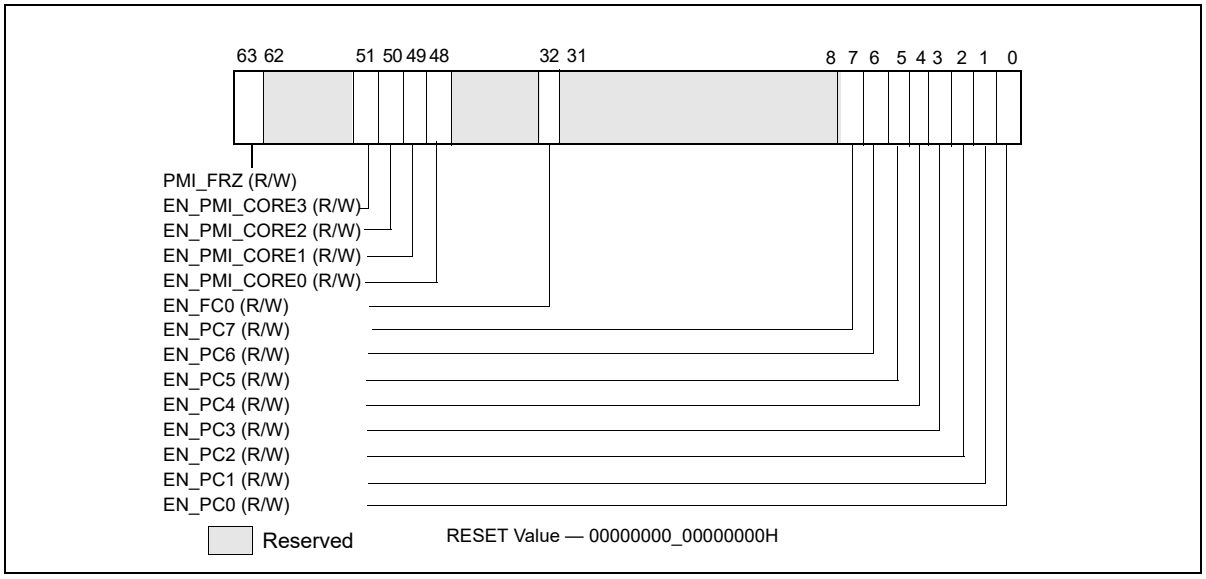

Figure 20-19. Layout of MSR_UNCORE_PERF_GLOBAL_CTRL MSR

MSR_UNCORE_PERF_GLOBAL_STATUS provides overflow status of the U-clock performance counters in the uncore. This is a read-only register. If an overflow status bit is set the corresponding counter has overflowed. The register provides a condition change bit (bit 63) which can be quickly checked by software to determine if a significant change has occurred since the last time the condition change status was cleared. Figure 20-20 shows the layout of MSR_UNCORE_PERF_GLOBAL_STATUS.

- OVF_PCn (bit n, n = 0, 7): When set, indicates general-purpose uncore counter MSR_UNCORE_PerfCntr n has overflowed.
- OVF_FC0 (bit 32): When set, indicates the fixed-function uncore counter MSR_UNCORE_FixedCntr0 has overflowed.
- OVF_PMI (bit 61): When set indicates that an uncore counter overflowed and generated an interrupt request.
- CHG (bit 63): When set indicates that at least one status bit in MSR_UNCORE_PERF_GLOBAL_STATUS register has changed state.

MSR_UNCORE_PERF_GLOBAL_OVF_CTRL allows software to clear the status bits in the UNCORE_PERF_GLOBAL_STATUS register. This is a write-only register, and individual status bits in the global status register are cleared by writing a binary one to the corresponding bit in this register. Writing zero to any bit position in this register has no effect on the uncore PMU hardware.

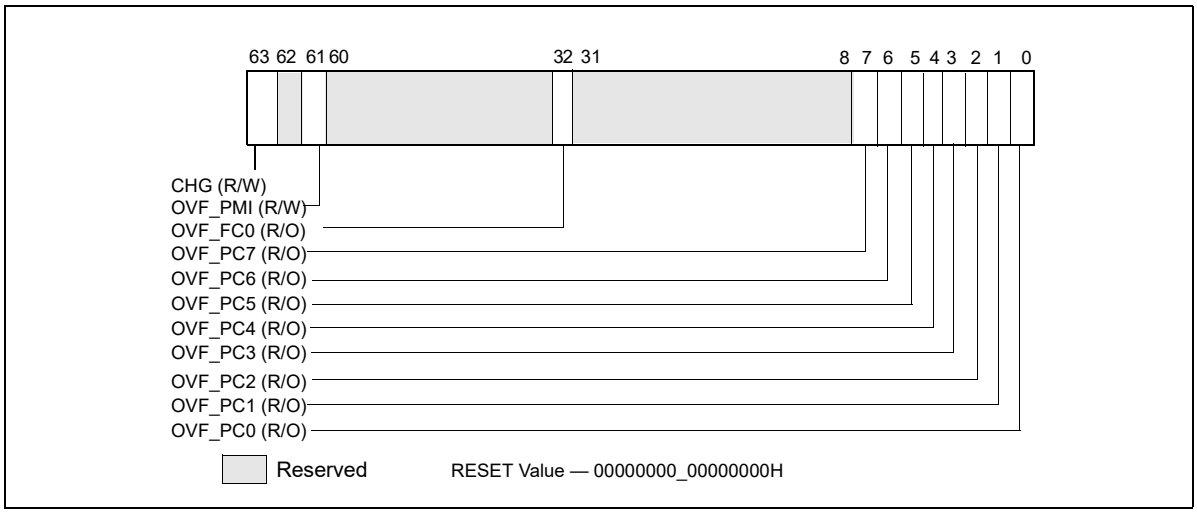

Figure 20-20. Layout of MSR_UNCORE_PERF_GLOBAL_STATUS MSR

Figure 20-21 shows the layout of MSR_UNCORE_PERF_GLOBAL_OVF_CTRL.

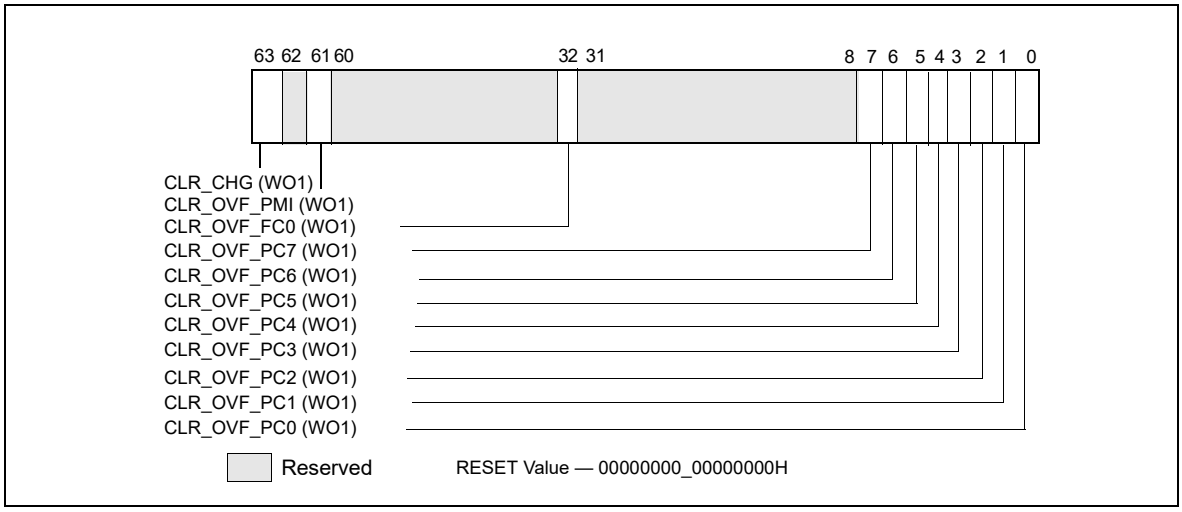

Figure 20-21. Layout of MSR_UNCORE_PERF_GLOBAL_OVF_CTRL MSR

- CLR_OVF_PCn (bit n, n = 0, 7): Set this bit to clear the overflow status for general-purpose uncore counter MSR_UNCORE_PerfCntr n. Writing a value other than 1 is ignored.
- CLR_OVF_FC0 (bit 32): Set this bit to clear the overflow status for the fixed-function uncore counter MSR_UNCORE_FixedCntr0. Writing a value other than 1 is ignored.
- CLR_OVF_PMI (bit 61): Set this bit to clear the OVF_PMI flag in MSR_UNCORE_PERF_GLOBAL_STATUS. Writing a value other than 1 is ignored.
- CLR_CHG (bit 63): Set this bit to clear the CHG flag in MSR_UNCORE_PERF_GLOBAL_STATUS register. Writing a value other than 1 is ignored.

20.3.1.2.2 Uncore Performance Event Configuration Facility

MSR_UNCORE_PerfEvtSel0 through MSR_UNCORE_PerfEvtSel7 are used to select performance event and configure the counting behavior of the respective uncore performance counter. Each uncore PerfEvtSel MSR is paired with an uncore performance counter. Each uncore counter must be locally configured using the corre-

sponding MSR_UNCORE_PerfEvtSelx and counting must be enabled using the respective EN_PCx bit in MSR_UNCORE_PERF_GLOBAL_CTRL. Figure 20-22 shows the layout of MSR_UNCORE_PERFEVTSELx.

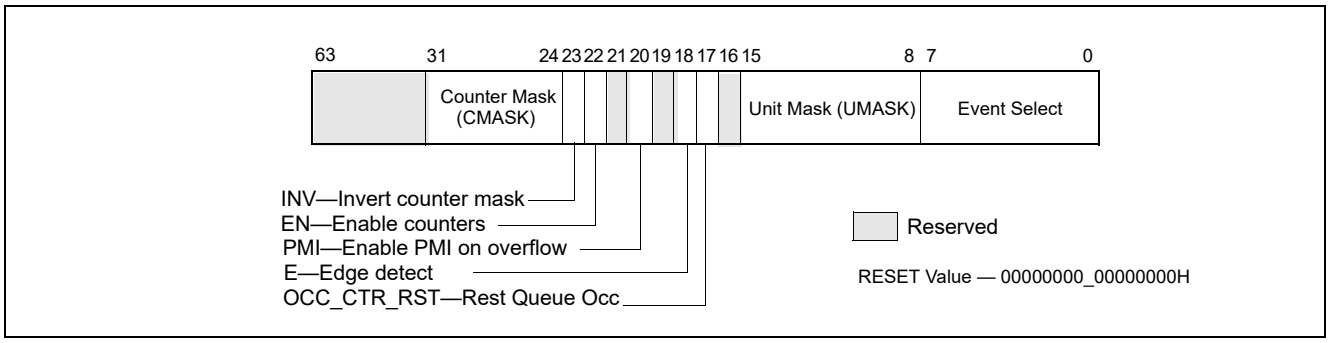

Figure 20-22. Layout of MSR_UNCORE_PERFEVTSELx MSRs

- Event Select (bits 7:0): Selects the event logic unit used to detect uncore events.
- Unit Mask (bits 15:8) : Condition qualifiers for the event selection logic specified in the Event Select field.
- OCC_CTR_RST (bit17): When set causes the queue occupancy counter associated with this event to be cleared (zeroed). Writing a zero to this bit will be ignored. It will always read as a zero.
- Edge Detect (bit 18): When set causes the counter to increment when a deasserted to asserted transition occurs for the conditions that can be expressed by any of the fields in this register.
- PMI (bit 20): When set, the uncore will generate an interrupt request when this counter overflowed. This request will be routed to the logical processors as enabled in the PMI enable bits (EN_PMI_COREx) in the register MSR_UNCORE_PERF_GLOBAL_CTRL.
- EN (bit 22): When clear, this counter is locally disabled. When set, this counter is locally enabled and counting starts when the corresponding EN_PCx bit in MSR_UNCORE_PERF_GLOBAL_CTRL is set.
- INV (bit 23): When clear, the Counter Mask field is interpreted as greater than or equal to. When set, the Counter Mask field is interpreted as less than.
- Counter Mask (bits 31:24): When this field is clear, it has no effect on counting. When set to a value other than zero, the logical processor compares this field to the event counts on each core clock cycle. If INV is clear and the event counts are greater than or equal to this field, the counter is incremented by one. If INV is set and the event counts are less than this field, the counter is incremented by one. Otherwise the counter is not incremented.

Figure 20-23 shows the layout of MSR_UNCORE_FIXED_CTR_CTRL.

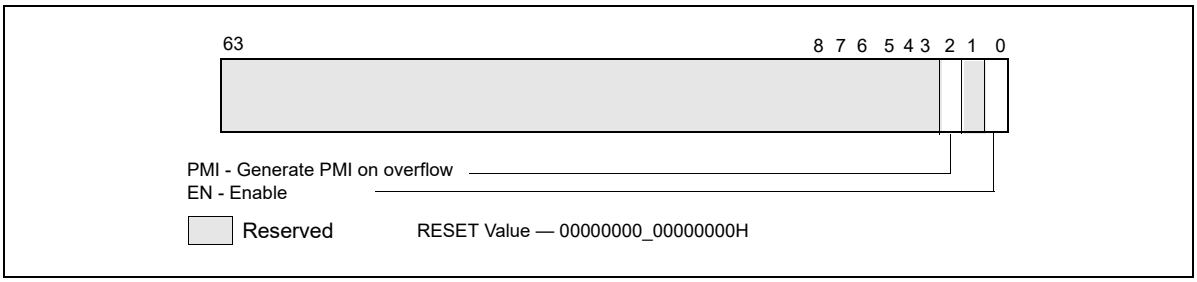

Figure 20-23. Layout of MSR_UNCORE_FIXED_CTR_CTRL MSR

- EN (bit 0): When clear, the uncore fixed-function counter is locally disabled. When set, it is locally enabled and counting starts when the EN_FC0 bit in MSR_UNCORE_PERF_GLOBAL_CTRL is set.
- PMI (bit 2): When set, the uncore will generate an interrupt request when the uncore fixed-function counter overflowed. This request will be routed to the logical processors as enabled in the PMI enable bits (EN_PMI_COREx) in the register MSR_UNCORE_PERF_GLOBAL_CTRL.

Both the general-purpose counters (MSR_UNCORE_PerfCntr) and the fixed-function counter (MSR_UNCORE_FixedCntr0) are 48 bits wide. They support both counting and interrupt based sampling usages. The event logic unit can filter event counts to specific regions of code or transaction types incoming to the home node logic.

20.3.1.2.3 Uncore Address/Opcode Match MSR

The Event Select field [7:0] of MSR_UNCORE_PERFEVTSELx is used to select different uncore event logic unit. When the event "ADDR_OPCODE_MATCH" is selected in the Event Select field, software can filter uncore performance events according to transaction address and certain transaction responses. The address filter and transaction response filtering requires the use of MSR_UNCORE_ADDR_OPCODE_MATCH register. The layout is shown in Figure 20-24.

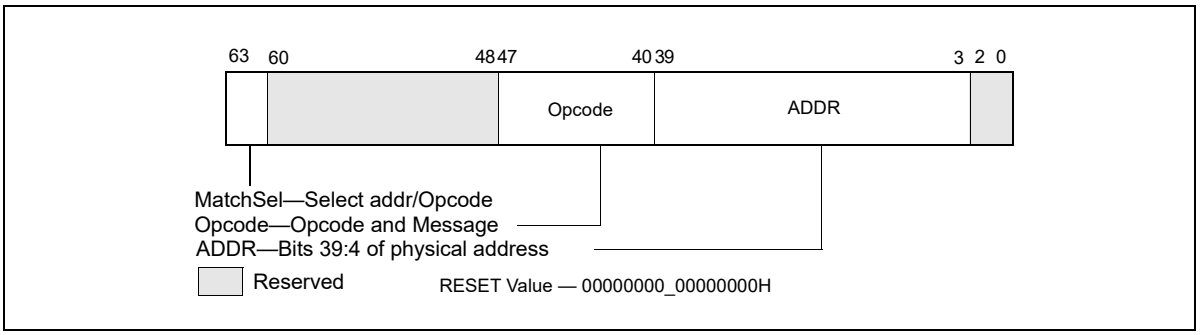

Figure 20-24. Layout of MSR_UNCORE_ADDR_OPCODE_MATCH MSR

- Addr (bits 39:3): The physical address to match if "MatchSel" field is set to select address match. The uncore performance counter will increment if the lowest 40-bit incoming physical address (excluding bits 2:0) for a transaction request matches bits 39:3.
- Opcode (bits 47:40) : Bits 47:40 allow software to filter uncore transactions based on QPI link message class/packed header opcode. These bits are consists two sub-fields:
  - — Bits 43:40 specify the QPI packet header opcode.
  - — Bits 47:44 specify the QPI message classes.

  Table 20-7 lists the encodings supported in the opcode field.

Table 20-7. Opcode Field Encoding for MSR_UNCORE_ADDR_OPCODE_MATCH

Opcode [43:40]	QPI Message Class		
	Home Request [47:44] = 0000B	Snoop Response [47:44] = 0001B	Data Response [47:44] = 1110B
		1	
DMND_IFETCH	2	2	
WB	3	3	
PF_DATA_RD	4	4	
PF_RFO	5	5	
PF_IFETCH	6	6	
OTHER	7	7	
NON_DRAM	15	15	

- MatchSel (bits 63:61): Software specifies the match criteria according to the following encoding:
  - 000B: Disable addr_opcode match hardware.
  - 100B: Count if only the address field matches.
  - 010B: Count if only the opcode field matches.
  - 110B: Count if either opcode field matches or the address field matches.
  - 001B: Count only if both opcode and address field match.
  - Other encoding are reserved.

20.3.1.3 Intel® Xeon® Processor 7500 Series Performance Monitoring Facility

The performance monitoring facility in the processor core of Intel® Xeon® processor 7500 series are the same as those supported in Intel Xeon processor 5500 series. The uncore subsystem in Intel Xeon processor 7500 series are significantly different The uncore performance monitoring facility consist of many distributed units associated with individual logic control units (referred to as boxes) within the uncore subsystem. A high level block diagram of the various box units of the uncore is shown in Figure 20-25.

Uncore PMUs are programmed via MSR interfaces. Each of the distributed uncore PMU units have several general-purpose counters. Each counter requires an associated event select MSR, and may require additional MSRs to configure sub-event conditions. The uncore PMU MSRs associated with each box can be categorized based on its functional scope: per-counter, per-box, or global across the uncore. The number counters available in each box type are different. Each box generally provides a set of MSRs to enable/disable, check status/overflow of multiple counters within each box.

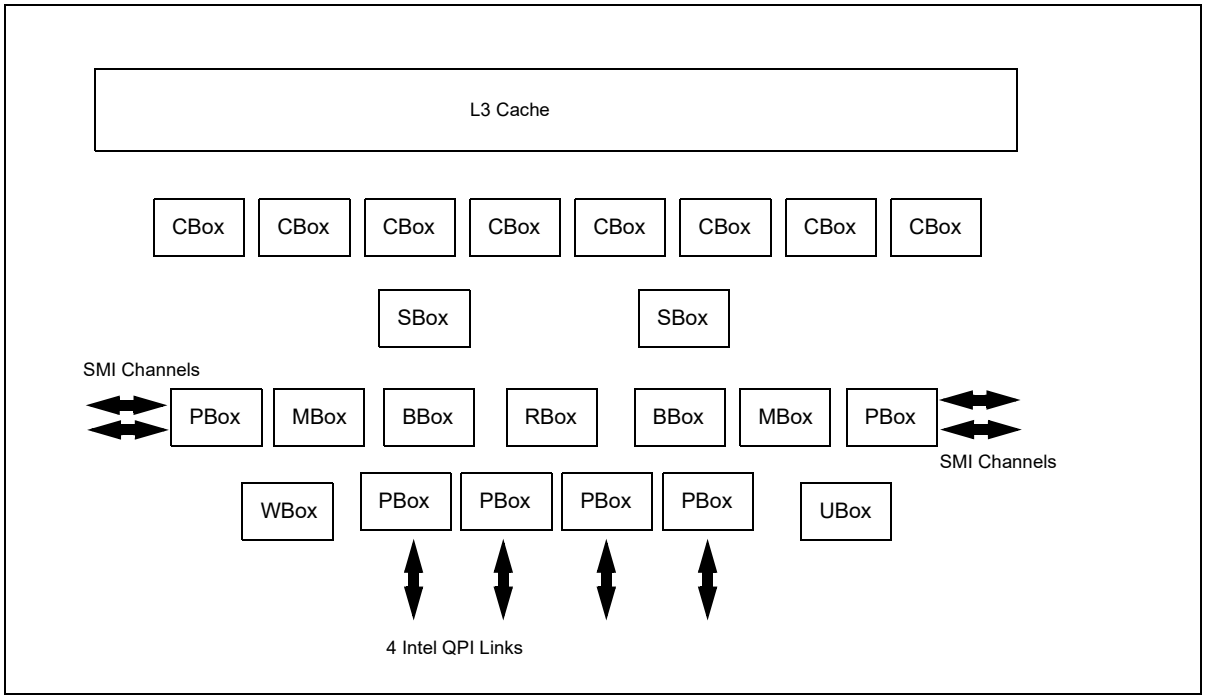

Figure 20-25. Distributed Units of the Uncore of Intel® Xeon® Processor 7500 Series

Table 20-8 summarizes the number MSRs for uncore PMU for each box.

Table 20-8. Uncore PMU MSR Summary

Box	# of Boxes	Counters per Box	Counter Width	General Purpose	Global Enable	Sub-control MSRs
C-Box	8	6	48	Yes	per-box	None
S-Box	2	4	48	Yes	per-box	Match/Mask
B-Box	2	4	48	Yes	per-box	Match/Mask
M-Box	2	6	48	Yes	per-box	Yes
R-Box	1	16 (2 port, 8 per port)	48	Yes	per-box	Yes
W-Box	1	4	48	Yes	per-box	None
		1	48	No	per-box	None
U-Box	1	1	48	Yes	uncore	None

The W-Box provides 4 general-purpose counters, each requiring an event select configuration MSR, similar to the general-purpose counters in other boxes. There is also a fixed-function counter that increments clockticks in the uncore clock domain.

For C,S,B,M,R, and W boxes, each box provides an MSR to enable/disable counting, configuring PMI of multiple counters within the same box, this is somewhat similar the "global control" programming interface, IA32_PERF_GLOBAL_CTRL, offered in the core PMU. Similarly status information and counter overflow control for multiple counters within the same box are also provided in C,S,B,M,R, and W boxes.

In the U-Box, MSR_U_PMON_GLOBAL_CTL provides overall uncore PMU enable/disable and PMI configuration control. The scope of status information in the U-box is at per-box granularity, in contrast to the per-box status information MSR (in the C,S,B,M,R, and W boxes) providing status information of individual counter overflow. The difference in scope also apply to the overflow control MSR in the U-Box versus those in the other Boxes.

The individual MSRs that provide uncore PMU interfaces are listed in Chapter 2, "Model-Specific Registers (MSRs)" in the *Intel® 64 and IA-32 Architectures Software Developer's Manual, Volume 4*, Table 2-17 under the general naming style of MSR_%box#%_PMON_%scope_function%, where %box#% designates the type of box and zero-based index if there are more the one box of the same type, %scope_function% follows the examples below:

- Multi-counter enabling MSRs: MSR_U_PMON_GLOBAL_CTL, MSR_S0_PMON_BOX_CTL, MSR_C7_PMON_BOX_CTL, etc.
- Multi-counter status MSRs: MSR_U_PMON_GLOBAL_STATUS, MSR_S0_PMON_BOX_STATUS, MSR_C7_PMON_BOX_STATUS, etc.
- Multi-counter overflow control MSRs: MSR_U_PMON_GLOBAL_OVF_CTL, MSR_S0_PMON_BOX_OVF_CTL, MSR_C7_PMON_BOX_OVF_CTL, etc.
- Performance counters MSRs: the scope is implicitly per counter, e.g., MSR_U_PMON_CTR, MSR_S0_PMON_CTR0, MSR_C7_PMON_CTR5, etc.
- Event select MSRs: the scope is implicitly per counter, e.g., MSR_U_PMON_EVNT_SEL, MSR_S0_PMON_EVNT_SEL0, MSR_C7_PMON_EVNT_SEL5, etc
- Sub-control MSRs: the scope is implicitly per-box granularity, e.g., MSR_M0_PMON_TIMESTAMP, MSR_R0_PMON_IPERF0_P1, MSR_S1_PMON_MATCH.

Details of uncore PMU MSR bit field definitions can be found in a separate document "Intel Xeon Processor 7500 Series Uncore Performance Monitoring Guide".

20.3.2 Performance Monitoring for Processors Based on Westmere Microarchitecture

All of the performance monitoring programming interfaces (architectural and non-architectural core PMU facilities, and uncore PMU) described in Section 20.6.3 also apply to processors based on Westmere microarchitecture.

Table 20-5 describes a non-architectural performance monitoring event (event code 0B7H) and associated MSR_OFFCORE_RSP_0 (address 1A6H) in the core PMU. This event and a second functionally equivalent offcore

response event using event code 0BBH and MSR_OFFCORE_RSP_1 (address 1A7H) are supported in processors based on Westmere microarchitecture. The event code and event mask definitions of non-architectural performance monitoring events can be found at: https://perfmon-events.intel.com/.

The load latency facility is the same as described in Section 20.3.1.1.2, but added enhancement to provide more information in the data source encoding field of each load latency record. The additional information relates to STLB_MISS and LOCK, see Table 20-13.

20.3.3 Intel® Xeon® Processor E7 Family Performance Monitoring Facility

The performance monitoring facility in the processor core of the Intel® Xeon® processor E7 family is the same as those supported in the Intel Xeon processor 5600 series[1]. The uncore subsystem in the Intel Xeon processor E7 family is similar to those of the Intel Xeon processor 7500 series. The high level construction of the uncore subsystem is similar to that shown in Figure 20-25, with the additional capability that up to 10 C-Box units are supported.

Table 20-9 summarizes the number MSRs for uncore PMU for each box.

Table 20-9. Uncore PMU MSR Summary for Intel® Xeon® Processor E7 Family

Box	# of Boxes	Counters per Box	Counter Width	General Purpose	Global Enable	Sub-control MSRs
C-Box	10	6	48	Yes	per-box	None
S-Box	2	4	48	Yes	per-box	Match/Mask
B-Box	2	4	48	Yes	per-box	Match/Mask
M-Box	2	6	48	Yes	per-box	Yes
R-Box	1	16 (2 port, 8 per port)	48	Yes	per-box	Yes
W-Box	1	4	48	Yes	per-box	None
		1	48	No	per-box	None
U-Box	1	1	48	Yes	uncore	None

Details of the uncore performance monitoring facility of Intel Xeon Processor E7 family is available in the "Intel® Xeon® Processor E7 Uncore Performance Monitoring Programming Reference Manual".

20.3.4 Performance Monitoring for Processors Based on Sandy Bridge Microarchitecture

Intel® Core™ i7-2xxx, Intel® Core™ i5-2xxx, Intel® Core™ i3-2xxx processor series, and Intel® Xeon® processor E3-1200 family are based on Sandy Bridge microarchitecture; this section describes the performance monitoring facilities provided in the processor core. The core PMU supports architectural performance monitoring capability with version ID 3 (see Section 20.2.3) and a host of non-architectural monitoring capabilities.

Architectural performance monitoring version 3 capabilities are described in Section 20.2.3.

The core PMU's capability is similar to those described in Section 20.3.1.1 and Section 20.6.3, with some differences and enhancements relative to Westmere microarchitecture summarized in Table 20-10.

1. Exceptions are indicated for event code 0FH in the event list for this processor (https://perfmon-events.intel.com/); and valid bits of data source encoding field of each load latency record is limited to bits 5:4 of Table 20-13.

Table 20-10. Core PMU Comparison

Box	Sandy Bridge Microarchitecture	Westmere Microarchitecture	Comment
# of Fixed counters per thread	3	3	Use CPUID to determine # of counters. See Section 20.2.1.
# of general-purpose counters per core	8	8	Use CPUID to determine # of counters. See Section 20.2.1.
Counter width (R,W)	R:48, W: 32/48	R:48, W:32	See Section 20.2.2.
# of programmable counters per thread	4 or (8 if a core not shared by two threads)	4	Use CPUID to determine # of counters. See Section 20.2.1.
PMI Overhead Mitigation	▪ Freeze_Perfmon_on_PMI with legacy semantics. ▪ Freeze_LBR_on_PMI with legacy semantics for branch profiling. ▪ Freeze_while_SMM.	▪ Freeze_Perfmon_on_PMI with legacy semantics. ▪ Freeze_LBR_on_PMI with legacy semantics for branch profiling. ▪ Freeze_while_SMM.	See Section 18.4.7.
Processor Event Based Sampling (PEBS) Events	See Table 20-12.	See Table 20-84.	IA32_PMC4-IA32_PMC7 do not support PEBS.
PEBS-Load Latency	See Section 20.3.4.4.2; ▪ Data source encoding ▪ STLB miss encoding ▪ Lock transaction encoding	Data source encoding	
PEBS-Precise Store	Section 20.3.4.4.3	No	
PEBS-PDIR	Yes (using precise INST_RETIRED.ALL).	No	
Off-core Response Event	MSR 1A6H and 1A7H, extended request and response types.	MSR 1A6H and 1A7H, limited response types.	Nehalem supports 1A6H only.

20.3.4.1 Global Counter Control Facilities in Sandy Bridge Microarchitecture

The number of general-purpose performance counters visible to a logical processor can vary across Processors based on Sandy Bridge microarchitecture. Software must use CPUID to determine the number performance counters/event select registers (See Section 20.2.1.1).

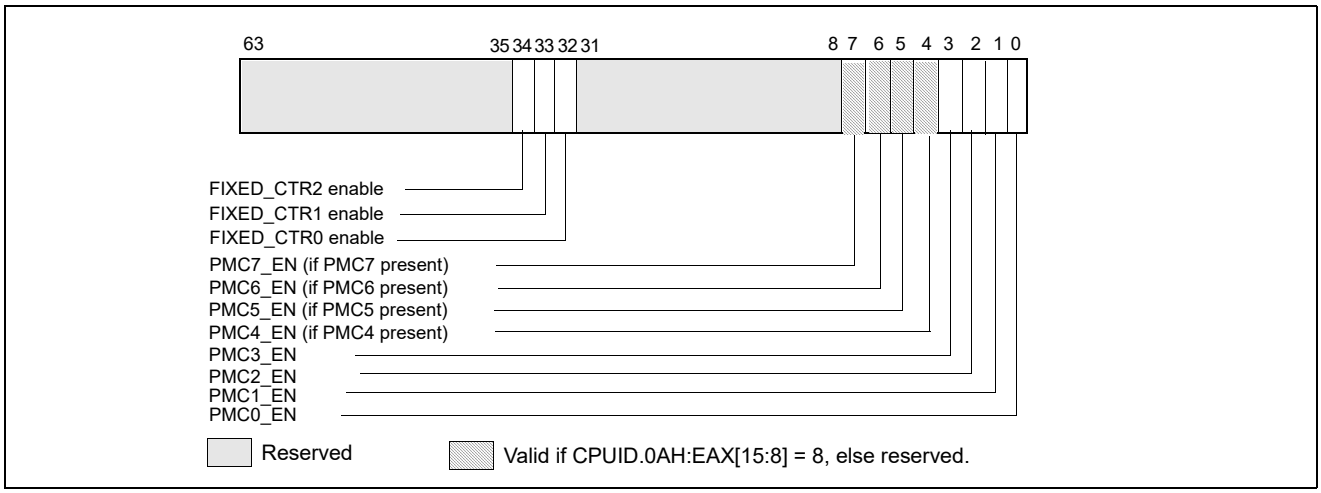

Figure 20-26. IA32_PERF_GLOBAL_CTRL MSR in Sandy Bridge Microarchitecture

Figure 20-44 depicts the layout of IA32_PERF_GLOBAL_CTRL MSR. The enable bits (PMC4_EN, PMC5_EN, PMC6_EN, PMC7_EN) corresponding to IA32_PMC4-IA32_PMC7 are valid only if CPUID.0AH:EAX[15:8] reports a value of '8'. If CPUID.0AH:EAX[15:8] = 4, attempts to set the invalid bits will cause #GP.

Each enable bit in IA32_PERF_GLOBAL_CTRL is AND'ed with the enable bits for all privilege levels in the respective IA32_PERFEVTSELx or IA32_PERF_FIXED_CTR_CTRL MSRs to start/stop the counting of respective counters. Counting is enabled if the AND'ed results is true; counting is disabled when the result is false. IA32_PERF_GLOBAL_STATUS MSR provides single-bit status used by software to query the overflow condition of each performance counter. IA32_PERF_GLOBAL_STATUS[bit 62] indicates overflow conditions of the DS area data buffer (see Figure 20-27). A value of 1 in each bit of the PMCx_OVF field indicates an overflow condition has occurred in the associated counter.

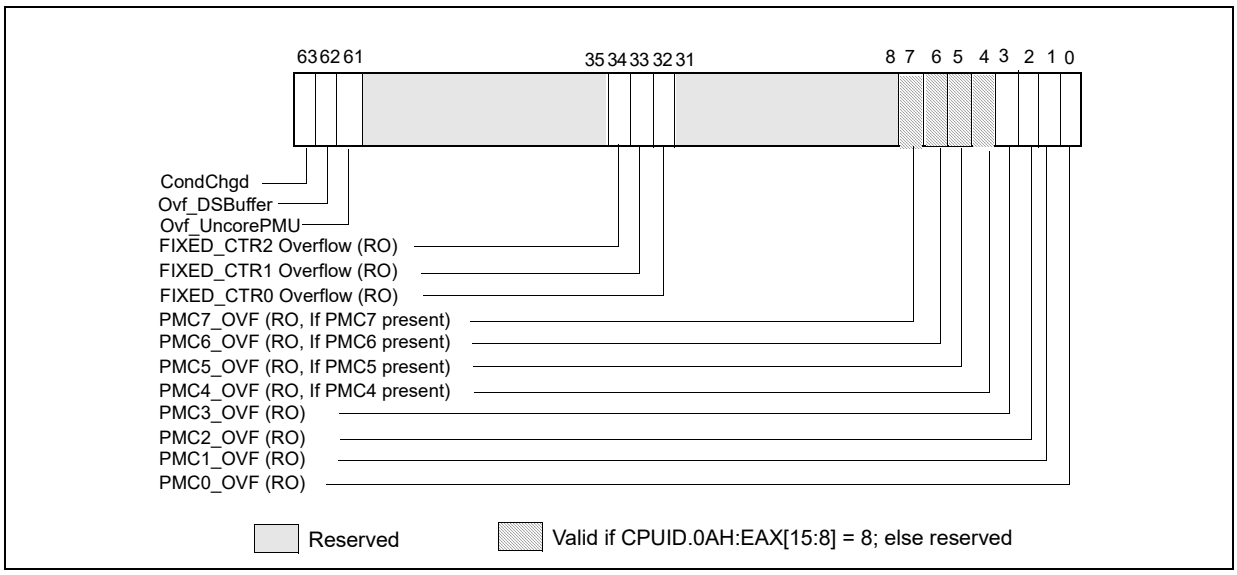

Figure 20-27. IA32_PERF_GLOBAL_STATUS MSR in Sandy Bridge Microarchitecture

When a performance counter is configured for PEBS, an overflow condition in the counter will arm PEBS. On the subsequent event following overflow, the processor will generate a PEBS event. On a PEBS event, the processor will perform bounds checks based on the parameters defined in the DS Save Area (see Section 18.4.9). Upon successful bounds checks, the processor will store the data record in the defined buffer area, clear the counter overflow status, and reload the counter. If the bounds checks fail, the PEBS will be skipped entirely. In the event that the PEBS buffer fills up, the processor will set the OvfBuffer bit in MSR_PERF_GLOBAL_STATUS.

IA32_PERF_GLOBAL_OVF_CTL MSR allows software to clear overflow the indicators for general-purpose or fixed-function counters via a single WRMSR (see Figure 20-28). Clear overflow indications when:

- Setting up new values in the event select and/or UMASK field for counting or interrupt based sampling.
- Reloading counter values to continue sampling.
- Disabling event counting or interrupt based sampling.

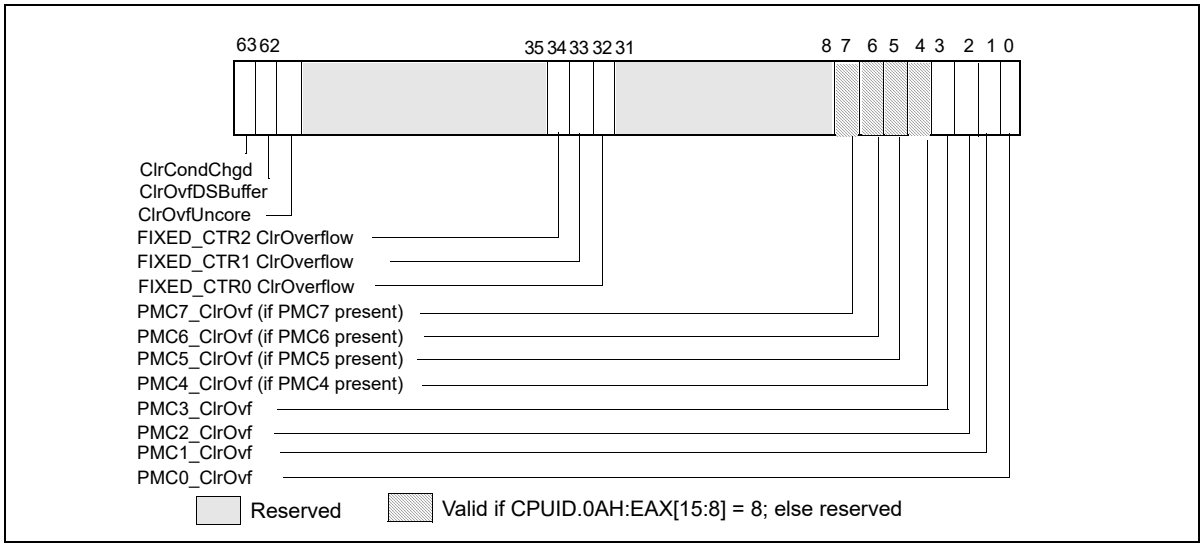

Figure 20-28. IA32_PERF_GLOBAL_OVF_CTRL MSR in Sandy Bridge Microarchitecture

20.3.4.2 Counter Coalescence

In processors based on Sandy Bridge microarchitecture, each processor core implements eight general-purpose counters. CPUID.0AH:EAX[15:8] will report the number of counters visible to software.

If a processor core is shared by two logical processors, each logical processors can access up to four counters (IA32_PMC0-IA32_PMC3). This is the same as in the prior generation for processors based on Nehalem microarchitecture.

If a processor core is not shared by two logical processors, up to eight general-purpose counters are visible. If CPUID.0AH:EAX[15:8] reports 8 counters, then IA32_PMC4-IA32_PMC7 would occupy MSR addresses 0C5H through 0C8H. Each counter is accompanied by an event select MSR (IA32_PERFEVTSEL4-IA32_PERFEVTSEL7).

If CPUID.0AH:EAX[15:8] report 4, access to IA32_PMC4-IA32_PMC7, IA32_PMC4-IA32_PMC7 will cause #GP. Writing 1's to bit position 7:4 of IA32_PERF_GLOBAL_CTRL, IA32_PERF_GLOBAL_STATUS, or IA32_PERF_GLOBAL_OVF_CTL will also cause #GP.

20.3.4.3 Full Width Writes to Performance Counters

Processors based on Sandy Bridge microarchitecture support full-width writes to the general-purpose counters, IA32_PMCx. Support of full-width writes are enumerated by IA32_PERF_CAPABILITIES.FW_WRITES[13] (see Section 20.2.4).

The default behavior of IA32_PMCx is unchanged, i.e., WRMSR to IA32_PMCx results in a sign-extended 32-bit value of the input EAX written into IA32_PMCx. Full-width writes must issue WRMSR to a dedicated alias MSR address for each IA32_PMCx.

Software must check the presence of full-width write capability and the presence of the alias address IA32_A_PMCx by testing IA32_PERF_CAPABILITIES[13].

20.3.4.4 PEBS Support in Sandy Bridge Microarchitecture

Processors based on Sandy Bridge microarchitecture support PEBS, similar to those offered in prior generation, with several enhanced features. The key components and differences of PEBS facility relative to Westmere microarchitecture is summarized in Table 20-11.

Table 20-11. PEBS Facility Comparison

Box	Sandy Bridge Microarchitecture	Westmere Microarchitecture	Comment
Valid IA32_PMCx	PMC0-PMC3	PMC0-PMC3	No PEBS on PMC4-PMC7.
PEBS Buffer Programming	Section 20.3.1.1.1	Section 20.3.1.1.1	Unchanged
IA32_PEBS_ENABLE Layout	Figure 20-29	Figure 20-15	
PEBS record layout	Physical Layout same as Table 20-3.	Table 20-3	Enhanced fields at offsets 98H, A0H, A8H.
PEBS Events	See Table 20-12.	See Table 20-84.	IA32_PMC4-IA32_PMC7 do not support PEBS.
PEBS-Load Latency	See Table 20-13.	Table 20-4	
PEBS-Precise Store	Yes; see Section 20.3.4.4.3.	No	IA32_PMC3 only
PEBS-PDIR	Yes	No	IA32_PMC1 only
PEBS skid from EventingIP	1 (or 2 if micro+macro fusion)	1	
SAMPLING Restriction	Small SAV(CountDown) value incur higher overhead than prior generation.		

Only IA32_PMC0 through IA32_PMC3 support PEBS.

NOTE

PEBS events are only valid when the following fields of IA32_PERFEVTSELx are all zero: AnyThread, Edge, Invert, CMask.

In a PMU with PDIR capability, PEBS behavior is unpredictable if IA32_PERFEVTSELx or IA32_PMCx is changed for a PEBS-enabled counter while an event is being counted. To avoid this, changes to the programming or value of a PEBS-enabled counter should be performed when the counter is disabled.

In IA32_PEBS_ENABLE MSR, bit 63 is defined as PS_ENABLE: When set, this enables IA32_PMC3 to capture precise store information. Only IA32_PMC3 supports the precise store facility. In typical usage of PEBS, the bit fields in IA32_PEBS_ENABLE are written to when the agent software starts PEBS operation; the enabled bit fields should be modified only when re-programming another PEBS event or cleared when the agent uses the performance counters for non-PEBS operations.

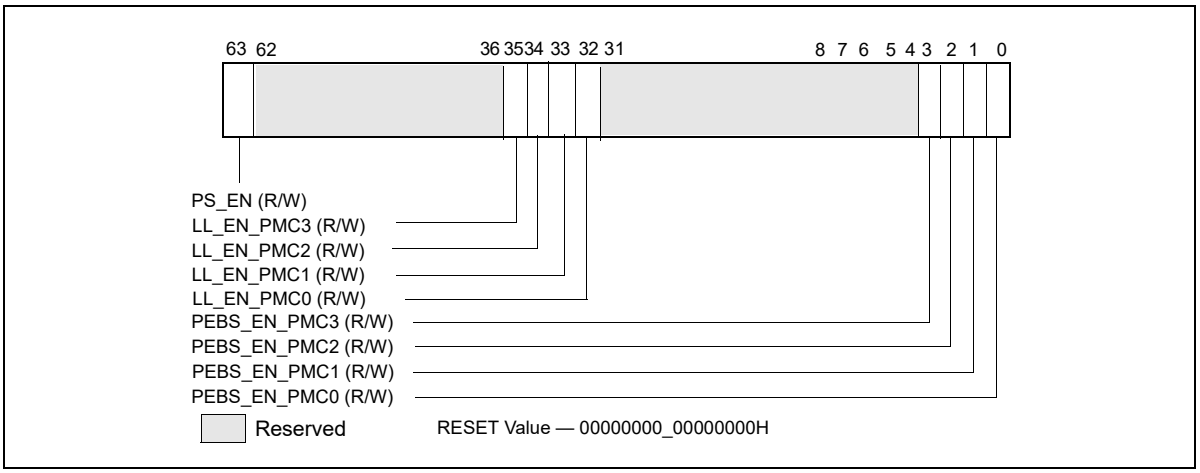

Figure 20-29. Layout of IA32_PEBS_ENABLE MSR

20.3.4.4.1 PEBS Record Format

The layout of PEBS records physically identical to those shown in Table 20-3, but the fields at offsets 98H, A0H, and A8H have been enhanced to support additional PEBS capabilities.

- Load/Store Data Linear Address (Offset 98H): This field will contain the linear address of the source of the load, or linear address of the destination of the store.
- Data Source /Store Status (Offset A0H): When load latency is enabled, this field will contain three piece of information (including an encoded value indicating the source which satisfied the load operation). The source field encodings are detailed in Table 20-4. When precise store is enabled, this field will contain information indicating the status of the store, as detailed in Table 19.
- Latency Value/0 (Offset A8H): When load latency is enabled, this field contains the latency in cycles to service the load. This field is not meaningful when precise store is enabled and will be written to zero in that case. Upon writing the PEBS record, microcode clears the overflow status bits in the IA32_PERF_GLOBAL_STATUS corresponding to those counters that both overflowed and were enabled in the IA32_PEBS_ENABLE register. The status bits of other counters remain unaffected.

The number PEBS events has expanded. The list of PEBS events supported in Sandy Bridge microarchitecture is shown in Table 20-12.

Table 20-12. PEBS Performance Events for Sandy Bridge Microarchitecture

Event Name	Event Select	Sub-event	UMask
INST_RETIRED	C0H	PREC_DIST	01H[1]
UOPS_RETIRED	C2H	All	01H
		Retire_Slots	02H
BR_INST_RETIRED	C4H	Conditional	01H
		Near_Call	02H
		All_branches	04H
		Near_Return	08H
		Near_Taken	20H
BR_MISP_RETIRED	C5H	Conditional	01H
		Near_Call	02H
		All_branches	04H
		Not_Taken	10H
		Taken	20H

Table 20-12. PEBS Performance Events for Sandy Bridge Microarchitecture (Contd.)

Event Name	Event Select	Sub-event	UMask
MEM_UOPS_RETIRED	D0H	STLB_MISS_LOADS	11H
		STLB_MISS_STORE	12H
		LOCK_LOADS	21H
		SPLIT_LOADS	41H
		SPLIT_STORES	42H
		ALL_LOADS	81H
		ALL_STORES	82H
MEM_LOAD_UOPS_RETIRED	D1H	L1_Hit	01H
		L2_Hit	02H
		L3_Hit	04H
		Hit_LFB	40H
MEM_LOAD_UOPS_LLC_HIT_RETIRED	D2H	XSNP_Miss	01H
		XSNP_Hit	02H
		XSNP_Hitm	04H
		XSNP_None	08H

NOTES:

1. Only available on IA32_PMC1.

20.3.4.4.2 Load Latency Performance Monitoring Facility

The load latency facility in Sandy Bridge microarchitecture is similar to that in prior microarchitectures. It provides software a means to characterize the average load latency to different levels of cache/memory hierarchy. This facility requires processor supporting enhanced PEBS record format in the PEBS buffer, see Table 20-3 and Section 20.3.4.4.1. This field measures the load latency from load's first dispatch of till final data writeback from the memory subsystem. The latency is reported for retired demand load operations and in core cycles (it accounts for re-dispatches).

To use this feature software must assure:

- One of the IA32_PERFEVTSELx MSR is programmed to specify the event unit MEM_TRANS_RETIRED, and the LATENCY_ABOVE_THRESHOLD event mask must be specified (IA32_PerfEvtSelX[15:0] = 1CDH). The corresponding counter IA32_PMCx will accumulate event counts for architecturally visible loads which exceed the programmed latency threshold specified separately in a MSR. Stores are ignored when this event is programmed. The CMASK or INV fields of the IA32_PerfEvtSelX register used for counting load latency must be 0. Writing other values will result in undefined behavior.
- The MSR_PEBS_LD_LAT_THRESHOLD MSR is programmed with the desired latency threshold in core clock cycles. Loads with latencies greater than this value are eligible for counting and latency data reporting. The minimum value that may be programmed in this register is 3 (the minimum detectable load latency is 4 core clock cycles).
- The PEBS enable bit in the IA32_PEBS_ENABLE register is set for the corresponding IA32_PMCx counter register. This means that both the PEBS_EN_CTRX and LL_EN_CTRX bits must be set for the counter(s) of interest. For example, to enable load latency on counter IA32_PMC0, the IA32_PEBS_ENABLE register must be programmed with the 64-bit value 00000001.00000001H.
- When Load latency event is enabled, no other PEBS event can be configured with other counters.

When the load-latency facility is enabled, load operations are randomly selected by hardware and tagged to carry information related to data source locality and latency. Latency and data source information of tagged loads are updated internally. The MEM_TRANS_RETIRED event for load latency counts only tagged retired loads. If a load is cancelled it will not be counted and the internal state of the load latency facility will not be updated. In this case the hardware will tag the next available load.

When a PEBS assist occurs, the last update of latency and data source information are captured by the assist and written as part of the PEBS record. The PEBS sample after value (SAV), specified in PEBS CounterX Reset, operates orthogonally to the tagging mechanism. Loads are randomly tagged to collect latency data. The SAV controls the number of tagged loads with latency information that will be written into the PEBS record field by the PEBS assists. The load latency data written to the PEBS record will be for the last tagged load operation which retired just before the PEBS assist was invoked.

The physical layout of the PEBS records is the same as shown in Table 20-3. The specificity of Data Source entry at offset A0H has been enhanced to report three pieces of information.

Table 20-13. Layout of Data Source Field of Load Latency Record

Field	Position	Description
Source	3:0	See Table 20-4
STLB_MISS	4	0: The load did not miss the STLB (hit the DTLB or STLB). 1: The load missed the STLB.
Lock	5	0: The load was not part of a locked transaction. 1: The load was part of a locked transaction.
Reserved	63:6	Reserved

The layout of MSR_PEBS_LD_LAT_THRESHOLD is the same as shown in Figure 20-17.

20.3.4.4.3 Precise Store Facility

Processors based on Sandy Bridge microarchitecture offer a precise store capability that complements the load latency facility. It provides a means to profile store memory references in the system.

Precise stores leverage the PEBS facility and provide additional information about sampled stores. Having precise memory reference events with linear address information for both loads and stores can help programmers improve data structure layout, eliminate remote node references, and identify cache-line conflicts in NUMA systems.

Only IA32_PMC3 can be used to capture precise store information. After enabling this facility, counter overflows will initiate the generation of PEBS records as previously described in PEBS. Upon counter overflow hardware captures the linear address and other status information of the next store that retires. This information is then written to the PEBS record.

To enable the precise store facility, software must complete the following steps. Please note that the precise store facility relies on the PEBS facility, so the PEBS configuration requirements must be completed before attempting to capture precise store information.

- Complete the PEBS configuration steps.
- Program the MEM_TRANS_RETIRED.PRECISE_STORE event in IA32_PERFEVTSEL3. Only counter 3 (IA32_PMC3) supports collection of precise store information.
- Set IA32_PEBS_ENABLE[3] and IA32_PEBS_ENABLE[63]. This enables IA32_PMC3 as a PEBS counter and enables the precise store facility, respectively.

The precise store information written into a PEBS record affects entries at offsets 98H, A0H, and A8H of Table 20-3. The specificity of Data Source entry at offset A0H has been enhanced to report three piece of information.

Table 20-14. Layout of Precise Store Information In PEBS Record

Field	Offset	Description
Store Data Linear Address	98H	The linear address of the destination of the store.
Store Status	A0H	**L1D Hit** (Bit 0): The store hit the data cache closest to the core (lowest latency cache) if this bit is set, otherwise the store missed the data cache. **STLB Miss** (bit 4): The store missed the STLB if set, otherwise the store hit the STLB **Locked Access** (bit 5): The store was part of a locked access if set, otherwise the store was not part of a locked access.
Reserved	A8H	Reserved

20.3.4.4.4 Precise Distribution of Instructions Retired (PDIR)

Upon triggering a PEBS assist, there will be a finite delay between the time the counter overflows and when the microcode starts to carry out its data collection obligations. INST_RETIRED is a very common event that is used to sample where performance bottleneck happened and to help identify its location in instruction address space. Even if the delay is constant in core clock space, it invariably manifest as variable "skids" in instruction address space. This creates a challenge for programmers to profile a workload and pinpoint the location of bottlenecks.

The core PMU in processors based on Sandy Bridge microarchitecture include a facility referred to as precise distribution of Instruction Retired (PDIR).

The PDIR facility mitigates the "skid" problem by providing an early indication of when the INST_RETIRED counter is about to overflow, allowing the machine to more precisely trap on the instruction that actually caused the counter overflow. On processors based on Sandy Bridge microarchitecture, skid is significantly reduced and can be as little as one instruction. On future implementations, PDIR may eliminate skid.

PDIR applies only to the INST_RETIRED.ALL precise event, and processors based on Sandy Bridge microarchitecture must use IA32_PMC1 with PerfEvtSel1 property configured and bit 1 in the IA32_PEBS_ENABLE set to 1. INST_RETIRED.ALL is a non-architectural performance event, it is not supported in prior generation microarchitectures. Additionally, on processors with CPUID DisplayFamily_DisplayModel signatures of 06_2A and 06_2D, the tool that programs PDIR should quiesce the rest of the programmable counters in the core when PDIR is active.

20.3.4.5 Off-core Response Performance Monitoring

The core PMU in processors based on Sandy Bridge microarchitecture provides off-core response facility similar to prior generation. Off-core response can be programmed only with a specific pair of event select and counter MSR, and with specific event codes and predefine mask bit value in a dedicated MSR to specify attributes of the off-core transaction. Two event codes are dedicated for off-core response event programming. Each event code for off-core response monitoring requires programming an associated configuration MSR, MSR_OFFCORE_RSP_x. Table 20-15 lists the event code, mask value and additional off-core configuration MSR that must be programmed to count off-core response events using IA32_PMCx.

Table 20-15. Off-Core Response Event Encoding

Counter	Event code	UMask	Required Off-core Response MSR
PMC0-3	B7H	01H	MSR_OFFCORE_RSP_0 (address 1A6H)
PMC0-3	BBH	01H	MSR_OFFCORE_RSP_1 (address 1A7H)

The layout of MSR_OFFCORE_RSP_0 and MSR_OFFCORE_RSP_1 are shown in Figure 20-30 and Figure 20-31. Bits 15:0 specifies the request type of a transaction request to the uncore. Bits 30:16 specifies supplier information, bits 37:31 specifies snoop response information.

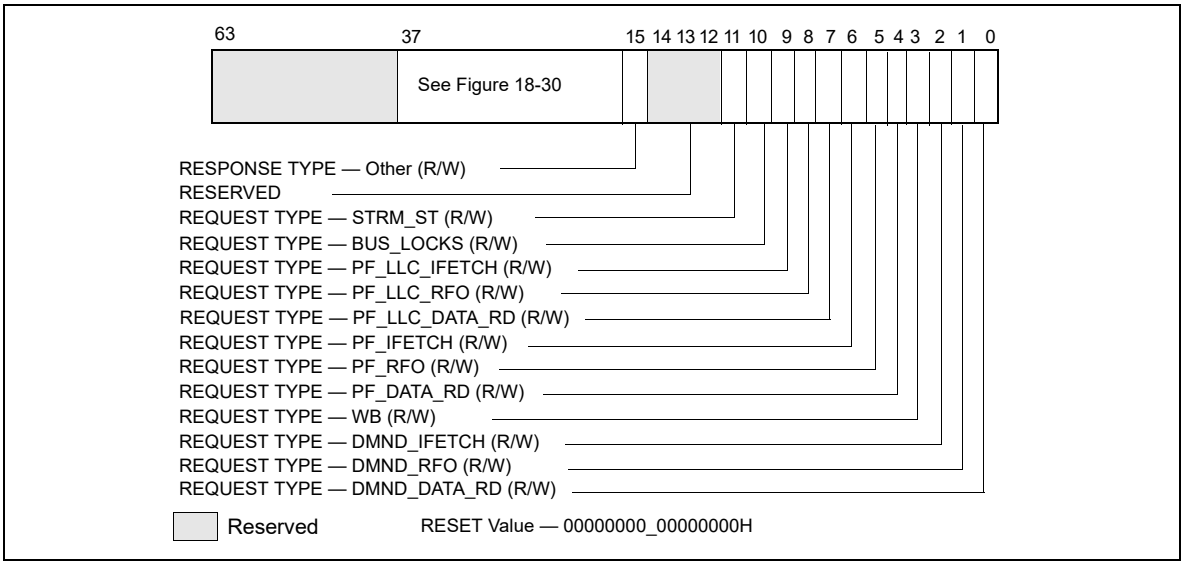

Figure 20-30. Request_Type Fields for MSR_OFFCORE_RSP_x

Table 20-16. MSR_OFFCORE_RSP_x Request_Type Field Definition

Bit Name	Offset	Description
DMND_DATA_RD	0	Counts the number of demand data reads of full and partial cachelines as well as demand data page table entry cacheline reads. Does not count L2 data read prefetches or instruction fetches.
DMND_RFO	1	Counts the number of demand and DCU prefetch reads for ownership (RFO) requests generated by a write to data cacheline. Does not count L2 RFO prefetches.
DMND_IFETCH	2	Counts the number of demand instruction cacheline reads and L1 instruction cacheline prefetches.
WB	3	Counts the number of writeback (modified to exclusive) transactions.
PF_DATA_RD	4	Counts the number of data cacheline reads generated by L2 prefetchers.
PF_RFO	5	Counts the number of RFO requests generated by L2 prefetchers.
PF_IFETCH	6	Counts the number of code reads generated by L2 prefetchers.
PF_LLC_DATA_RD	7	L2 prefetcher to L3 for loads.
PF_LLC_RFO	8	RFO requests generated by L2 prefetcher
PF_LLC_IFETCH	9	L2 prefetcher to L3 for instruction fetches.
BUS_LOCKS	10	Bus lock and split lock requests
STRM_ST	11	Streaming store requests
OTHER	15	Any other request that crosses IDI, including I/O.

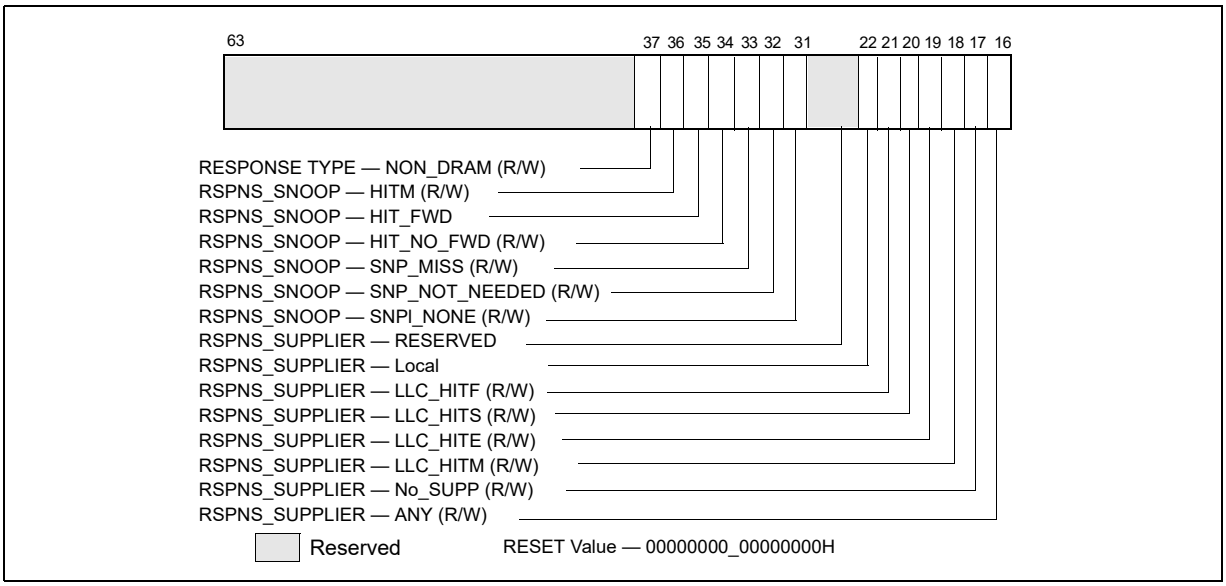

Figure 20-31. Response_Supplier and Snoop Info Fields for MSR_OFFCORE_RSP_x

To properly program this extra register, software must set at least one request type bit and a valid response type pattern. Otherwise, the event count reported will be zero. It is permissible and useful to set multiple request and response type bits in order to obtain various classes of off-core response events. Although MSR_OFFCORE_RSP_x allow an agent software to program numerous combinations that meet the above guideline, not all combinations produce meaningful data.

Table 20-17. MSR_OFFCORE_RSP_x Response Supplier Info Field Definition

Subtype	Bit Name	Offset	Description
Common	Any	16	Catch all value for any response types.
Supplier Info	NO_SUPP	17	No Supplier Information available.
	LLC_HITM	18	M-state initial lookup stat in L3.
	LLC_HITE	19	E-state
	LLC_HITS	20	S-state
	LLC_HITF	21	F-state
	LOCAL	22	Local DRAM Controller.
	Reserved	30:23	Reserved

To specify a complete offcore response filter, software must properly program bits in the request and response type fields. A valid request type must have at least one bit set in the non-reserved bits of 15:0. A valid response type must be a non-zero value of the following expression:

ANY | [(‘OR’ of Supplier Info Bits) & (‘OR’ of Snoop Info Bits)]

If “ANY“ bit is set, the supplier and snoop info bits are ignored.

Table 20-18. MSR_OFFCORE_RSP_x Snoop Info Field Definition

Subtype	Bit Name	Offset	Description
Snoop Info	SNP_NONE	31	No details on snoop-related information.
	SNP_NOT_NEEDED	32	No snoop was needed to satisfy the request.
	SNP_MISS	33	A snoop was needed and it missed all snooped caches: -For LLC Hit, ReslHitI was returned by all cores -For LLC Miss, Rspl was returned by all sockets and data was returned from DRAM.
	SNP_NO_FWD	34	A snoop was needed and it hits in at least one snooped cache. Hit denotes a cache-line was valid before snoop effect. This includes: -Snoop Hit w/ Invalidation (LLC Hit, RFO) -Snoop Hit, Left Shared (LLC Hit/Miss, IFetch/Data_RD) -Snoop Hit w/ Invalidation and No Forward (LLC Miss, RFO Hit S) In the LLC Miss case, data is returned from DRAM.
	SNP_FWD	35	A snoop was needed and data was forwarded from a remote socket. This includes: -Snoop Forward Clean, Left Shared (LLC Hit/Miss, IFetch/Data_RD/RFT).
	HITM	36	A snoop was needed and it HitM-ed in local or remote cache. HitM denotes a cache-line was in modified state before effect as a results of snoop. This includes: -Snoop HitM w/ WB (LLC miss, IFetch/Data_RD) -Snoop Forward Modified w/ Invalidation (LLC Hit/Miss, RFO) -Snoop MtoS (LLC Hit, IFetch/Data_RD).
	NON_DRAM	37	Target was non-DRAM system address. This includes MMIO transactions.

20.3.4.6 Uncore Performance Monitoring Facilities In Intel® Core™ i7-2xxx, Intel® Core™ i5-2xxx, Intel® Core™ i3-2xxx Processor Series

The uncore sub-system in Intel® Core™ i7-2xxx, Intel® Core™ i5-2xxx, Intel® Core™ i3-2xxx processor series provides a unified L3 that can support up to four processor cores. The L3 cache consists multiple slices, each slice interface with a processor via a coherence engine, referred to as a C-Box. Each C-Box provides dedicated facility of MSRs to select uncore performance monitoring events and each C-Box event select MSR is paired with a counter register, similar in style as those described in Section 20.3.1.2.2. The ARB unit in the uncore also provides its local performance counters and event select MSRs. The layout of the event select MSRs in the C-Boxes and the ARB unit are shown in Figure 20-32.

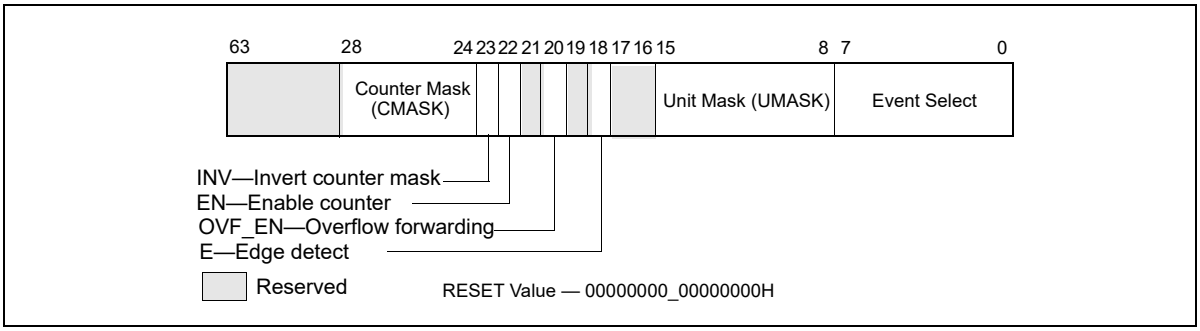

Figure 20-32. Layout of Uncore PERFEVTSEL MSR for a C-Box Unit or the ARB Unit

The bit fields of the uncore event select MSRs for a C-box unit or the ARB unit are summarized below:

- Event_Select (bits 7:0) and UMASK (bits 15:8): Specifies the microarchitectural condition to count in a local uncore PMU counter, see the event list at: https://perfmon-events.intel.com/.
- E (bit 18): Enables edge detection filtering, if 1.
- OVF_EN (bit 20): Enables the overflow indicator from the uncore counter forwarded to MSR_UNC_PERF_GLOBAL_CTRL, if 1.
- EN (bit 22): Enables the local counter associated with this event select MSR.
- INV (bit 23): Event count increments with non-negative value if 0, with negated value if 1.
- CMASK (bits 28:24): Specifies a positive threshold value to filter raw event count input.

At the uncore domain level, there is a master set of control MSRs that centrally manages all the performance monitoring facility of uncore units. Figure 20-33 shows the layout of the uncore domain global control.

When an uncore counter overflows, a PMI can be routed to a processor core. Bits 3:0 of MSR_UNC_PERF_GLOBAL_CTRL can be used to select which processor core to handle the uncore PMI. Software must then write to bit 13 of IA32_DEBUGCTL (at address 1D9H) to enable this capability.

- PMI_SEL_Core#: Enables the forwarding of an uncore PMI request to a processor core, if 1. If bit 30 (WakePMI) is '1', a wake request is sent to the respective processor core prior to sending the PMI.
- EN: Enables the fixed uncore counter, the ARB counters, and the CBO counters in the uncore PMU, if 1. This bit is cleared if bit 31 (FREEZE) is set and any enabled uncore counters overflow.
- WakePMI: Controls sending a wake request to any halted processor core before issuing the uncore PMI request. If a processor core was halted and not sent a wake request, the uncore PMI will not be serviced by the processor core.
- FREEZE: Provides the capability to freeze all uncore counters when an overflow condition occurs in a unit counter. When this bit is set, and a counter overflow occurs, the uncore PMU logic will clear the global enable bit (bit 29).

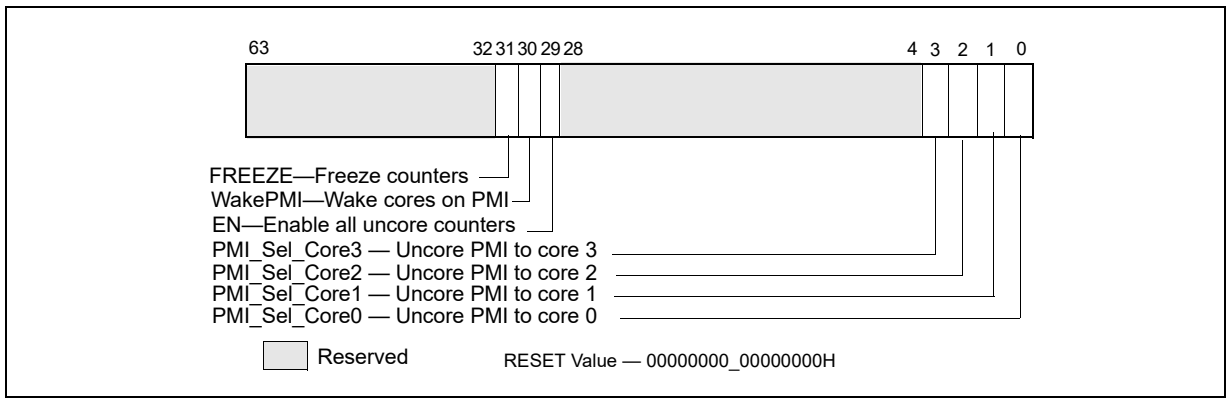

Figure 20-33. Layout of MSR_UNC_PERF_GLOBAL_CTRL MSR for Uncore

Additionally, there is also a fixed counter, counting uncore clockticks, for the uncore domain. Table 20-19 summarizes the number MSRs for uncore PMU for each box.

Table 20-19. Uncore PMU MSR Summary

Box	# of Boxes	Counters per Box	Counter Width	General Purpose	Global Enable	Comment
C-Box	SKU specific	2	44	Yes	Per-box	Up to 4, seeTable 2-21 MSR_UNC_CBO_CONFIG
ARB	1	2	44	Yes	Uncore	

Table 20-19. Uncore PMU MSR Summary (Contd.)

Box	# of Boxes	Counters per Box	Counter Width	General Purpose	Global Enable	Comment
Fixed Counter	N.A.	N.A.	48	No	Uncore	

20.3.4.6.1 Uncore Performance Monitoring Events

There are certain restrictions on the uncore performance counters in each C-Box. Specifically,

- Occupancy events are supported only with counter 0 but not counter 1.
- Other uncore C-Box events can be programmed with either counter 0 or 1.

The C-Box uncore performance events can collect performance characteristics of transactions initiated by processor core. In that respect, they are similar to various sub-events in the OFFCORE_RESPONSE family of performance events in the core PMU. Information such as data supplier locality (LLC HIT/MISS) and snoop responses can be collected via OFFCORE_RESPONSE and qualified on a per-thread basis.

On the other hand, uncore performance event logic cannot associate its counts with the same level of per-thread qualification attributes as the core PMU events can. Therefore, whenever similar event programming capabilities are available from both core PMU and uncore PMU, the recommendation is that utilizing the core PMU events may be less affected by artifacts, complex interactions and other factors.

20.3.4.7 Intel® Xeon® Processor E5 Family Performance Monitoring Facility

The Intel® Xeon® Processor E5 Family (and Intel® Core™ i7-3930K Processor) are based on Sandy Bridge-E microarchitecture. While the processor cores share the same microarchitecture as those of the Intel® Xeon® Processor E3 Family and 2nd generation Intel Core i7-2xxx, Intel Core i5-2xxx, Intel Core i3-2xxx processor series, the uncore subsystems are different. An overview of the uncore performance monitoring facilities of the Intel Xeon processor E5 family (and Intel Core i7-3930K processor) is described in Section 20.3.4.8.

Thus, the performance monitoring facilities in the processor core generally are the same as those described in Section 20.6.3 through Section 20.3.4.5. However, the MSR_OFFCORE_RSP_0/MSR_OFFCORE_RSP_1 Response Supplier Info field shown in Table 20-17 applies to Intel Core Processors with CPUID signature of DisplayFamily_DisplayModel encoding of 06_2AH; Intel Xeon processor with CPUID signature of DisplayFamily_DisplayModel encoding of 06_2DH supports an additional field for remote DRAM controller shown in Table 20-20. Additionally, there are some small differences in the non-architectural performance monitoring events (see event list available at: https://perfmon-events.intel.com/).

Table 20-20. MSR_OFFCORE_RSP_x Supplier Info Field Definitions

Subtype	Bit Name	Offset	Description
Common	Any	16	Catch all value for any response types.
Supplier Info	NO_SUPP	17	No Supplier Information available.
	LLC_HITM	18	M-state initial lookup stat in L3.
	LLC_HITE	19	E-state
	LLC_HITS	20	S-state
	LLC_HITF	21	F-state
	LOCAL	22	Local DRAM Controller.
	Remote	30:23	Remote DRAM Controller (either all 0s or all 1s).

20.3.4.8 Intel® Xeon® Processor E5 Family Uncore Performance Monitoring Facility

The uncore subsystem in the Intel Xeon processor E5-2600 product family has some similarities with those of the Intel Xeon processor E7 family. Within the uncore subsystem, localized performance counter sets are provided at logic control unit scope. For example, each Cbox caching agent has a set of local performance counters, and the power controller unit (PCU) has its own local performance counters. Up to 8 C-Box units are supported in the uncore sub-system.

Table 20-21 summarizes the uncore PMU facilities providing MSR interfaces.

Table 20-21. Uncore PMU MSR Summary for Intel® Xeon® Processor E5 Family

Box	# of Boxes	Counters per Box	Counter Width	General Purpose	Global Enable	Sub-control MSRs
C-Box	8	4	44	Yes	per-box	None
PCU	1	4	48	Yes	per-box	Match/Mask
U-Box	1	2	44	Yes	uncore	None

Details of the uncore performance monitoring facility of Intel Xeon Processor E5 family is available in "Intel® Xeon® Processor E5 Uncore Performance Monitoring Programming Reference Manual". The MSR-based uncore PMU interfaces are listed in Table 2-24.

20.3.5 3rd Generation Intel® Core™ Processor Performance Monitoring Facility

The 3rd generation Intel® Core™ processor family and Intel® Xeon® processor E3-1200v2 product family are based on the Ivy Bridge microarchitecture. The performance monitoring facilities in the processor core generally are the same as those described in Section 20.6.3 through Section 20.3.4.5. The non-architectural performance monitoring events supported by the processor core can be found at: https://perfmon-events.intel.com/.

20.3.5.1 Intel® Xeon® Processor E5 v2 and E7 v2 Family Uncore Performance Monitoring Facility

The uncore subsystem in the Intel Xeon processor E5 v2 and Intel Xeon Processor E7 v2 product families are based on the Ivy Bridge-E microarchitecture. There are some similarities with those of the Intel Xeon processor E5 family based on the Sandy Bridge microarchitecture. Within the uncore subsystem, localized performance counter sets are provided at logic control unit scope.

Details of the uncore performance monitoring facility of Intel Xeon Processor E5 v2 and Intel Xeon Processor E7 v2 families are available in the "Intel® Xeon® Processor E5 v2 and E7 v2 Uncore Performance Monitoring Programming Reference Manual". The MSR-based uncore PMU interfaces are listed in Table 2-28.

20.3.6 4th Generation Intel® Core™ Processor Performance Monitoring Facility

The 4th generation Intel® Core™ processor and Intel® Xeon® processor E3-1200 v3 product family are based on the Haswell microarchitecture. The core PMU supports architectural performance monitoring capability with version ID 3 (see Section 20.2.3) and a host of non-architectural monitoring capabilities.

Architectural performance monitoring version 3 capabilities are described in Section 20.2.3.

The core PMU's capability is similar to those described in Section 20.6.3 through Section 20.3.4.5, with some differences and enhancements summarized in Table 20-22. Additionally, the core PMU provides some enhancement to support performance monitoring when the target workload contains instruction streams using Intel® Transactional Synchronization Extensions (TSX), see Section 20.3.6.5. For details of Intel TSX, see Chapter 16, "Programming with Intel® Transactional Synchronization Extensions" of *Intel® 64 and IA-32 Architectures Software Developer's Manual, Volume 1*.

Table 20-22. Core PMU Comparison

Box	Haswell Microarchitecture	Sandy Bridge Microarchitecture	Comment
# of Fixed counters per thread	3	3	Use CPUID to determine # of counters. See Section 20.2.1.
# of general-purpose counters per core	8	8	Use CPUID to determine # of counters. See Section 20.2.1.
Counter width (R,W)	R:48, W: 32/48	R:48, W: 32/48	See Section 20.2.2.
# of programmable counters per thread	4 or (8 if a core not shared by two threads)	4 or (8 if a core not shared by two threads)	Use CPUID to determine # of counters. See Section 20.2.1.
PMI Overhead Mitigation	▪ Freeze_Perfmon_on_PMI with legacy semantics. ▪ Freeze_LBR_on_PMI with legacy semantics for branch profiling. ▪ Freeze_while_SMM.	▪ Freeze_Perfmon_on_PMI with legacy semantics. ▪ Freeze_LBR_on_PMI with legacy semantics for branch profiling. ▪ Freeze_while_SMM.	See Section 18.4.7.
Processor Event Based Sampling (PEBS) Events	See Table 20-12 and Section 20.3.6.5.1.	See Table 20-12.	IA32_PMC4-IA32_PMC7 do not support PEBS.
PEBS-Load Latency	See Section 20.3.4.4.2.	See Section 20.3.4.4.2.	
PEBS-Precise Store	No, replaced by Data Address profiling.	Section 20.3.4.4.3	
PEBS-PDIR	Yes (using precise INST_RETIRED.ALL)	Yes (using precise INST_RETIRED.ALL)	
PEBS-EventingIP	Yes	No	
Data Address Profiling	Yes	No	
LBR Profiling	Yes	Yes	
Call Stack Profiling	Yes, see Section 18.11.	No	Use LBR facility.
Off-core Response Event	MSR 1A6H and 1A7H; extended request and response types.	MSR 1A6H and 1A7H; extended request and response types.	
Intel TSX support for Perfmon	See Section 20.3.6.5.	No	

20.3.6.1 Processor Event Based Sampling (PEBS) Facility

The PEBS facility in the 4th Generation Intel Core processor is similar to those in processors based on Sandy Bridge microarchitecture, with several enhanced features. The key components and differences of PEBS facility relative to Sandy Bridge microarchitecture is summarized in Table 20-23.

Table 20-23. PEBS Facility Comparison

Box	Haswell Microarchitecture	Sandy Bridge Microarchitecture	Comment
Valid IA32_PMCx	PMC0-PMC3	PMC0-PMC3	No PEBS on PMC4-PMC7
PEBS Buffer Programming	Section 20.3.1.1.1	Section 20.3.1.1.1	Unchanged
IA32_PEBS_ENABLE Layout	Figure 20-15	Figure 20-29	
PEBS record layout	Table 20-24; enhanced fields at offsets 98H, A0H, A8H, B0H.	Table 20-3; enhanced fields at offsets 98H, A0H, A8H.	

Table 20-23. PEBS Facility Comparison

Box	Haswell Microarchitecture	Sandy Bridge Microarchitecture	Comment
Precise Events	See Table 20-12.	See Table 20-12.	IA32_PMC4-IA32_PMC7 do not support PEBS.
PEBS-Load Latency	See Table 20-13.	Table 20-13	
PEBS-Precise Store	No, replaced by data address profiling.	Yes; see Section 20.3.4.4.3.	
PEBS-PDIR	Yes	Yes	IA32_PMC1 only.
PEBS skid from EventingIP	1 (or 2 if micro+macro fusion)	1	
SAMPLING Restriction	Small SAV(CountDown) value incur higher overhead than prior generation.		

Only IA32_PMC0 through IA32_PMC3 support PEBS.

NOTE

PEBS events are only valid when the following fields of IA32_PERFEVTSELx are all zero: AnyThread, Edge, Invert, CMask.

In a PMU with PDIR capability, PEBS behavior is unpredictable if IA32_PERFEVTSELx or IA32_PMCx is changed for a PEBS-enabled counter while an event is being counted. To avoid this, changes to the programming or value of a PEBS-enabled counter should be performed when the counter is disabled.

20.3.6.2 PEBS Data Format

The PEBS record format for the 4th Generation Intel Core processor is shown in Table 20-24. The PEBS record format, along with debug/store area storage format, does not change regardless of whether IA-32e mode is active or not. CPUID.01H:ECX.DTES64[bit 2] reports whether the processor's DS storage format support is mode-independent. When set, it uses 64-bit DS storage format.

Table 20-24. PEBS Record Format for 4th Generation Intel Core Processor Family

Byte Offset	Field	Byte Offset	Field
00H	R/EFLAGS	60H	R10
08H	R/EIP	68H	R11
10H	R/EAX	70H	R12
18H	R/EBX	78H	R13
20H	R/ECX	80H	R14
28H	R/EDX	88H	R15
30H	R/ESI	90H	IA32_PERF_GLOBAL_STATUS
38H	R/EDI	98H	Data Linear Address
40H	R/EBP	A0H	Data Source Encoding
48H	R/ESP	A8H	Latency value (core cycles)
50H	R8	B0H	EventingIP
58H	R9	B8H	TX Abort Information (Section 20.3.6.5.1)

The layout of PEBS records are almost identical to those shown in Table 20-3. Offset B0H is a new field that records the eventing IP address of the retired instruction that triggered the PEBS assist.

The PEBS records at offsets 98H, A0H, and ABH record data gathered from three of the PEBS capabilities in prior processor generations: load latency facility (Section 20.3.4.4.2), PDIR (Section 20.3.4.4.4), and the equivalent capability of precise store in prior generation (see Section 20.3.6.3).

In the core PMU of the 4th generation Intel Core processor, load latency facility and PDIR capabilities are unchanged. However, precise store is replaced by an enhanced capability, data address profiling, that is not restricted to store address. Data address profiling also records information in PEBS records at offsets 98H, A0H, and ABH.

20.3.6.3 PEBS Data Address Profiling

The Data Linear Address facility is also abbreviated as DataLA. The facility is a replacement or extension of the precise store facility in previous processor generations. The DataLA facility complements the load latency facility by providing a means to profile load and store memory references in the system, leverages the PEBS facility, and provides additional information about sampled loads and stores. Having precise memory reference events with linear address information for both loads and stores provides information to improve data structure layout, eliminate remote node references, and identify cache-line conflicts in NUMA systems.

The DataLA facility in the 4th generation processor supports the following events configured to use PEBS:

Table 20-25. Precise Events That Supports Data Linear Address Profiling

Event Name	Event Name
MEM_UOPS_RETIRED.STLB_MISS_LOADS	MEM_UOPS_RETIRED.STLB_MISS_STORES
MEM_UOPS_RETIRED.LOCK_LOADS	MEM_UOPS_RETIRED.SPLIT_STORES
MEM_UOPS_RETIRED.SPLIT_LOADS	MEM_UOPS_RETIRED.ALL_STORES
MEM_UOPS_RETIRED.ALL_LOADS	MEM_LOAD_UOPS_LLC_MISS_RETIRED.LOCAL_DRAM
MEM_LOAD_UOPS_RETIRED.L1_HIT	MEM_LOAD_UOPS_RETIRED.L2_HIT
MEM_LOAD_UOPS_RETIRED.L3_HIT	MEM_LOAD_UOPS_RETIRED.L1_MISS
MEM_LOAD_UOPS_RETIRED.L2_MISS	MEM_LOAD_UOPS_RETIRED.L3_MISS
MEM_LOAD_UOPS_RETIRED.HIT_LFB	MEM_LOAD_UOPS_L3_HIT_RETIRED.XSNP_MISS
MEM_LOAD_UOPS_L3_HIT_RETIRED.XSNP_HIT	MEM_LOAD_UOPS_L3_HIT_RETIRED.XSNP_HITM
UOPS_RETIRED.ALL (if load or store is tagged)	MEM_LOAD_UOPS_LLC_HIT_RETIRED.XSNP_NONE

DataLA can use any one of the IA32_PMC0-IA32_PMC3 counters. Counter overflows will initiate the generation of PEBS records. Upon counter overflow, hardware captures the linear address and possible other status information of the retiring memory uop. This information is then written to the PEBS record that is subsequently generated.

To enable the DataLA facility, software must complete the following steps. Please note that the DataLA facility relies on the PEBS facility, so the PEBS configuration requirements must be completed before attempting to capture DataLA information.

- Complete the PEBS configuration steps.
- Program an event listed in Table 20-25 using any one of IA32_PERFEVTSEL0-IA32_PERFEVTSEL3.
- Set the corresponding IA32_PEBS_ENABLE.PEBS_EN_CTRx bit. This enables the corresponding IA32_PMCx as a PEBS counter and enables the DataLA facility.

When the DataLA facility is enabled, the relevant information written into a PEBS record affects entries at offsets 98H, A0H, and A8H, as shown in Table 20-26.

Table 20-26. Layout of Data Linear Address Information In PEBS Record

Field	Offset	Description
Data Linear Address	98H	The linear address of the load or the destination of the store.
Store Status	A0H	▪ **DCU Hit** (Bit 0): The store hit the data cache closest to the core (L1 cache) if this bit is set, otherwise the store missed the data cache. This information is valid only for the following store events: UOPS_RETIRED.ALL (if store is tagged), MEM_UOPS_RETIRED.STLB_MISS_STORES, MEM_UOPS_RETIRED.SPLIT_STORES, MEM_UOPS_RETIRED.ALL_STORES ▪ Other bits are zero, The STLB_MISS, LOCK bit information can be obtained by programming the corresponding store event in Table 20-25.
Reserved	A8H	Always zero.

20.3.6.3.1 EventingIP Record

The PEBS record layout for processors based on Haswell microarchitecture adds a new field at offset 0B0H. This is the eventingIP field that records the IP address of the retired instruction that triggered the PEBS assist. The EIP/RIP field at offset 08H records the IP address of the next instruction to be executed following the PEBS assist.

20.3.6.4 Off-core Response Performance Monitoring

The core PMU facility to collect off-core response events are similar to those described in Section 20.3.4.5. The event codes are listed in Table 20-15. Each event code for off-core response monitoring requires programming an associated configuration MSR, MSR_OFFCORE_RSP_x. Software must program MSR_OFFCORE_RSP_x according to:

- Transaction request type encoding (bits 15:0): see Table 20-27.
- Supplier information (bits 30:16): see Table 20-28.
- Snoop response information (bits 37:31): see Table 20-18.

Table 20-27. MSR_OFFCORE_RSP_x Request_Type Definition (Haswell Microarchitecture)

Bit Name	Offset	Description
DMND_DATA_RD	0	Counts the number of demand data reads and page table entry cacheline reads. Does not count L2 data read prefetches or instruction fetches.
DMND_RFO	1	Counts demand read (RFO) and software prefetches (PREFETCHW) for exclusive ownership in anticipation of a write.
DMND_IFETCH	2	Counts the number of demand instruction cacheline reads and L1 instruction cacheline prefetches.
COREWB	3	Counts the number of modified cachelines written back.
PF_DATA_RD	4	Counts the number of data cacheline reads generated by L2 prefetchers.
PF_RFO	5	Counts the number of RFO requests generated by L2 prefetchers.
PF_IFETCH	6	Counts the number of code reads generated by L2 prefetchers.
PF_L3_DATA_RD	7	Counts the number of data cacheline reads generated by L3 prefetchers.
PF_L3_RFO	8	Counts the number of RFO requests generated by L3 prefetchers.
PF_L3_CODE_RD	9	Counts the number of code reads generated by L3 prefetchers.
SPLIT_LOCK_UC_LOCK	10	Counts the number of lock requests that split across two cachelines or are to UC memory.
STRM_ST	11	Counts the number of streaming store requests electronically.
Reserved	14:12	Reserved

Table 20-27. MSR_OFFCORE_RSP_x Request_Type Definition (Haswell Microarchitecture) (Contd.)

Bit Name	Offset	Description
OTHER	15	Any other request that crosses IDI, including I/O.

The supplier information field listed in Table 20-28. The fields vary across products (according to CPUID signatures) and is noted in the description.

Table 20-28. MSR_OFFCORE_RSP_x Supplier Info Field Definition (CPUID Signature 06_3CH, 06_46H)

Subtype	Bit Name	Offset	Description
Common	Any	16	Catch all value for any response types.
Supplier Info	NO_SUPP	17	No Supplier Information available.
	L3_HITM	18	M-state initial lookup stat in L3.
	L3_HITE	19	E-state
	L3_HITS	20	S-state
	Reserved	21	Reserved
	LOCAL	22	Local DRAM Controller.
	Reserved	30:23	Reserved

Table 20-29. MSR_OFFCORE_RSP_x Supplier Info Field Definition (CPUID Signature 06_45H)

Subtype	Bit Name	Offset	Description
Common	Any	16	Catch all value for any response types.
Supplier Info	NO_SUPP	17	No Supplier Information available.
	L3_HITM	18	M-state initial lookup stat in L3.
	L3_HITE	19	E-state
	L3_HITS	20	S-state
	Reserved	21	Reserved
	L4_HIT_LOCAL_L4	22	L4 Cache
	L4_HIT_REMOTE_HOP0_L4	23	L4 Cache
	L4_HIT_REMOTE_HOP1_L4	24	L4 Cache
	L4_HIT_REMOTE_HOP2P_L4	25	L4 Cache
	Reserved	30:26	Reserved

20.3.6.4.1 Off-core Response Performance Monitoring in Intel Xeon Processors E5 v3 Series

Table 20-28 lists the supplier information field that apply to Intel Xeon processor E5 v3 series (CPUID signature 06_3FH).

Table 20-30. MSR_OFFCORE_RSP_x Supplier Info Field Definition

Subtype	Bit Name	Offset	Description
Common	Any	16	Catch all value for any response types.
Supplier Info	NO_SUPP	17	No Supplier Information available.
	L3_HITM	18	M-state initial lookup stat in L3.
	L3_HITE	19	E-state
	L3_HITS	20	S-state
	L3_HITF	21	F-state
	LOCAL	22	Local DRAM Controller.
	Reserved	26:23	Reserved
	L3_MISS_REMOTE_HOP0	27	Hop 0 Remote supplier.
	L3_MISS_REMOTE_HOP1	28	Hop 1 Remote supplier.
	L3_MISS_REMOTE_HOP2P	29	Hop 2 or more Remote supplier.
	Reserved	30	Reserved

20.3.6.5 Performance Monitoring and Intel® TSX

Chapter 16 of *Intel® 64 and IA-32 Architectures Software Developer's Manual, Volume 1* describes the details of Intel® Transactional Synchronization Extensions (Intel® TSX). This section describes performance monitoring support for Intel TSX.

If a processor supports Intel TSX, the core PMU enhances its IA32_PERFEVTSELx MSR with two additional bit fields for event filtering. Support for Intel TSX is indicated by either (a) CPUID.(EAX=7, ECX=0):RTM[bit 11]=1, or (b) if CPUID.07H.EBX.HLE [bit 4] = 1. The TSX-enhanced layout of IA32_PERFEVTSELx is shown in Figure 20-34. The two additional bit fields are:

- **IN_TX** (bit 32): When set, the counter will only include counts that occurred inside a transactional region, regardless of whether that region was aborted or committed. This bit may only be set if the processor supports HLE or RTM.
- **IN_TXCP** (bit 33): When set, the counter will not include counts that occurred inside of an aborted transactional region. This bit may only be set if the processor supports HLE or RTM. This bit may only be set for IA32_PERFEVTSEL2.

When the IA32_PERFEVTSELx MSR is programmed with both IN_TX=0 and IN_TXCP=0 on a processor that supports Intel TSX, the result in a counter may include detectable conditions associated with a transaction code region for its aborted execution (if any) and completed execution.

In the initial implementation, software may need to take pre-caution when using the IN_TXCP bit. See Table 2-29.

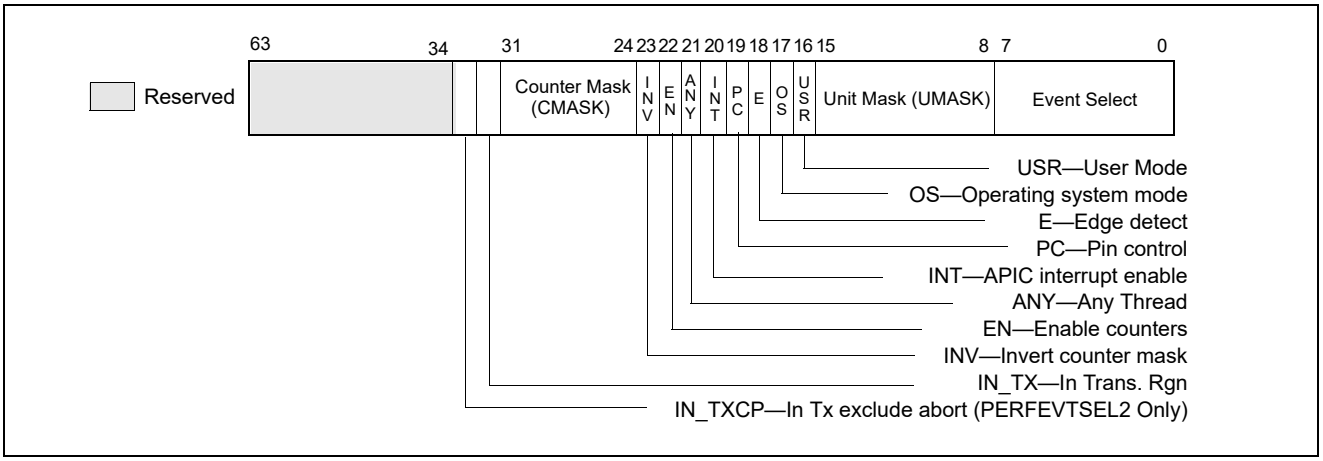

Figure 20-34. Layout of IA32_PERFEVTSELx MSRs Supporting Intel TSX

A common usage of setting IN_TXCP=1 is to capture the number of events that were discarded due to a transactional abort. With IA32_PMC2 configured to count in such a manner, then when a transactional region aborts, the value for that counter is restored to the value it had prior to the aborted transactional region. As a result, any updates performed to the counter during the aborted transactional region are discarded.

On the other hand, setting IN_TX=1 can be used to drill down on the performance characteristics of transactional code regions. When a PMCx is configured with the corresponding IA32_PERFEVTSELx.IN_TX=1, only eventing conditions that occur inside transactional code regions are propagated to the event logic and reflected in the counter result. Eventing conditions specified by IA32_PERFEVTSELx but occurring outside a transactional region are discarded.

Additionally, a number of performance events are solely focused on characterizing the execution of Intel TSX transactional code, they can be found at: https://perfmon-events.intel.com/.

20.3.6.5.1 Intel TSX and PEBS Support

If a PEBS event would have occurred inside a transactional region, then the transactional region first aborts, and then the PEBS event is processed.

Two of the TSX performance monitoring events also support using the PEBS facility to capture additional information. They are:

- HLE_RETIRED.ABORTED (encoding C8H mask 04H),
- RTM_RETIRED.ABORTED (encoding C9H mask 04H).

A transactional abort (HLE_RETIRED.ABORTED,RTM_RETIRED.ABORTED) can also be programmed to cause PEBS events. In this scenario, a PEBS event is processed following the abort.

Pending a PEBS record inside of a transactional region will cause a transactional abort. If a PEBS record was pended at the time of the abort or on an overflow of the TSX PEBS events listed above, only the following PEBS entries will be valid (enumerated by PEBS entry offset B8H bits[33:32] to indicate an HLE abort or an RTM abort):

- Offset B0H: EventingIP,
- Offset B8H: TX Abort Information

These fields are set for all PEBS events.

- Offset 08H (RIP/EIP) corresponds to the instruction following the outermost XACQUIRE in HLE or the first instruction of the fallback handler of the outermost XBEGIN instruction in RTM. This is useful to identify the aborted transactional region.

In the case of HLE, an aborted transaction will restart execution deterministically at the start of the HLE region. In the case of RTM, an aborted transaction will transfer execution to the RTM fallback handler.

The layout of the TX Abort Information field is given in Table 20-31.

Table 20-31. TX Abort Information Field Definition

Bit Name	Offset	Description
Cycles_Last_TX	31:0	The number of cycles in the last TSX region, regardless of whether that region had aborted or committed.
HLE_Abort	32	If set, the abort information corresponds to an aborted HLE execution
RTM_Abort	33	If set, the abort information corresponds to an aborted RTM execution
Instruction_Abort	34	If set, the abort was associated with the instruction corresponding to the eventing IP (offset 0B0H) within the transactional region.
Non_Instruction_Abort	35	If set, the instruction corresponding to the eventing IP may not necessarily be related to the transactional abort.
Retry	36	If set, retrying the transactional execution may have succeeded.
Data_Conflict	37	If set, another logical processor conflicted with a memory address that was part of the transactional region that aborted.
Capacity Writes	38	If set, the transactional region aborted due to exceeding resources for transactional writes.
Capacity Reads	39	If set, the transactional region aborted due to exceeding resources for transactional reads.
In_Suspend	40	Transaction was aborted while in a suspend region. This is an Intel Xeon processor only feature, available beginning with 4th generation Intel Xeon Scalable Processor Family; otherwise reserved.
Reserved	63:41	Reserved

20.3.6.6 Uncore Performance Monitoring Facilities in the 4th Generation Intel® Core™ Processors

The uncore sub-system in the 4th Generation Intel® Core™ processors provides its own performance monitoring facility. The uncore PMU facility provides dedicated MSRs to select uncore performance monitoring events in a similar manner as those described in Section 20.3.4.6.

The ARB unit and each C-Box provide local pairs of event select MSR and counter register. The layout of the event select MSRs in the C-Boxes are identical as shown in Figure 20-32.

At the uncore domain level, there is a master set of control MSRs that centrally manages all the performance monitoring facility of uncore units. Figure 20-33 shows the layout of the uncore domain global control.

Additionally, there is also a fixed counter, counting uncore clockticks, for the uncore domain. Table 20-19 summarizes the number MSRs for uncore PMU for each box.

Table 20-32. Uncore PMU MSR Summary

Box	# of Boxes	Counters per Box	Counter Width	General Purpose	Global Enable	Comment
C-Box	SKU specific	2	44	Yes	Per-box	Up to 4, seeTable 2-21 MSR_UNC_CBO_CONFIG
ARB	1	2	44	Yes	Uncore	
Fixed Counter	N.A.	N.A.	48	No	Uncore	

The uncore performance events for the C-Box and ARB units can be found at: https://perfmon-events.intel.com/.

20.3.6.7 Intel® Xeon® Processor E5 v3 Family Uncore Performance Monitoring Facility

Details of the uncore performance monitoring facility of Intel Xeon Processor E5 v3 families are available in "Intel® Xeon® Processor E5 v3 Uncore Performance Monitoring Programming Reference Manual". The MSR-based uncore PMU interfaces are listed in Table 2-33.

20.3.7 5th Generation Intel® Core™ Processor and Intel® Core™ M Processor Performance Monitoring Facility

The 5th Generation Intel® Core™ processor and the Intel® Core™ M processor families are based on the Broadwell microarchitecture. The core PMU supports architectural performance monitoring capability with version ID 3 (see Section 20.2.3) and a host of non-architectural monitoring capabilities.

Architectural performance monitoring version 3 capabilities are described in Section 20.2.3.

The core PMU has the same capability as those described in Section 20.3.6. IA32_PERF_GLOBAL_STATUS provide a bit indicator (bit 55) for PMI handler to distinguish PMI due to output buffer overflow condition due to accumulating packet data from Intel Processor Trace.

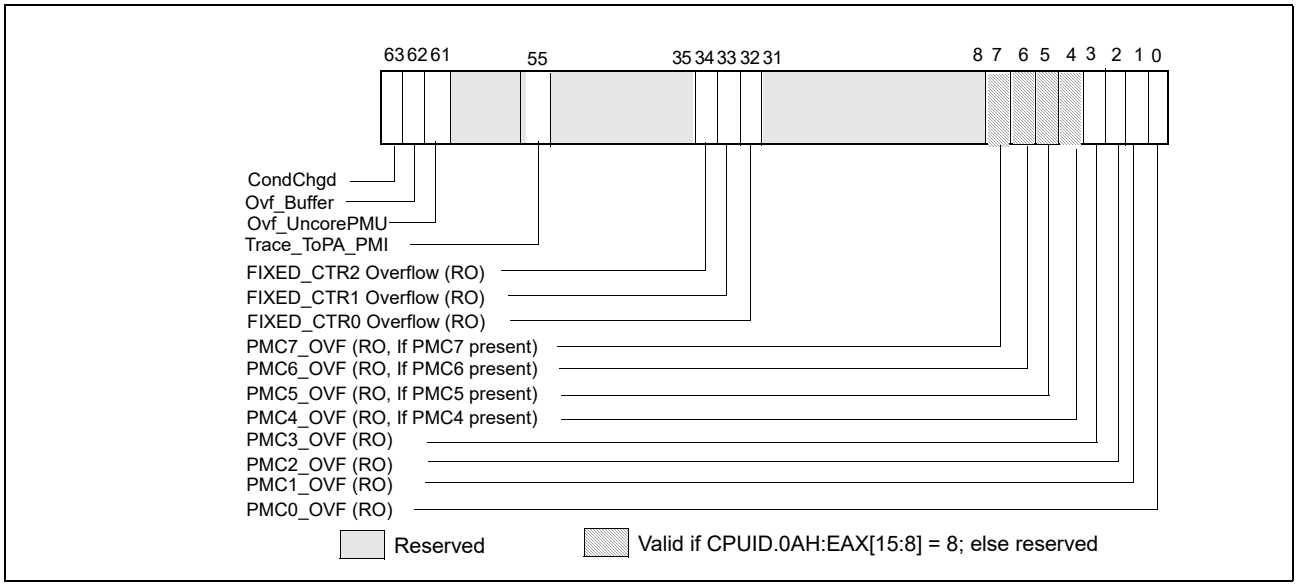

Figure 20-35. IA32_PERF_GLOBAL_STATUS MSR in Broadwell Microarchitecture

Details of Intel Processor Trace is described in Chapter 33, "Intel® Processor Trace". The IA32_PERF_GLOBAL_OVF_CTRL MSR provides a corresponding reset control bit.

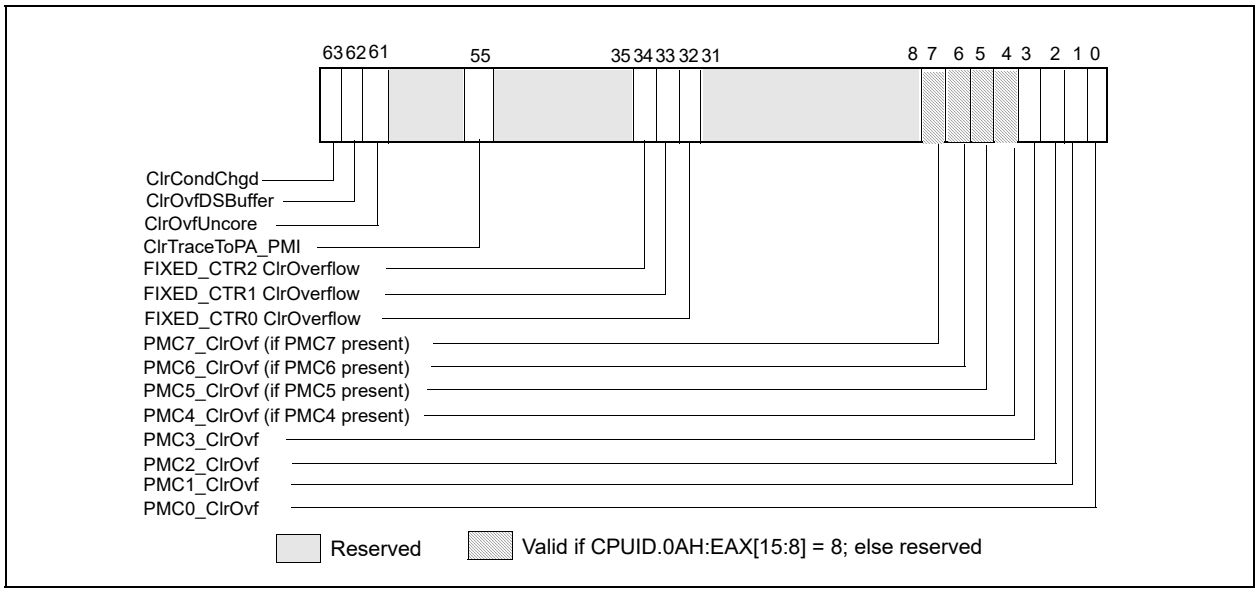

Figure 20-36. IA32_PERF_GLOBAL_OVF_CTRL MSR in Broadwell microarchitecture

The specifics of non-architectural performance events can be found at: https://perfmon-events.intel.com/.

20.3.8 6th Generation, 7th Generation and 8th Generation Intel® Core™ Processor Performance Monitoring Facility

The 6th generation Intel® Core™ processor is based on the Skylake microarchitecture. The 7th generation Intel® Core™ processor is based on the Kaby Lake microarchitecture. The 8th generation Intel® Core™ processors, 9th generation Intel® Core™ processors, and Intel® Xeon® E processors are based on the Coffee Lake microarchitecture. For these microarchitectures, the core PMU supports architectural performance monitoring capability with version ID 4 (see Section 20.2.4) and a host of non-architectural monitoring capabilities.

Architectural performance monitoring version 4 capabilities are described in Section 20.2.4.

The core PMU's capability is similar to those described in Section 20.6.3 through Section 20.3.4.5, with some differences and enhancements summarized in Table 20-33. Additionally, the core PMU provides some enhancement to support performance monitoring when the target workload contains instruction streams using Intel® Transactional Synchronization Extensions (TSX), see Section 20.3.6.5. For details of Intel TSX, see Chapter 16, "Programming with Intel® Transactional Synchronization Extensions" of *Intel® 64 and IA-32 Architectures Software Developer's Manual, Volume 1*.

Performance monitoring result may be affected by side-band activity on processors that support Intel SGX, details are described in Chapter 40, "Enclave Code Debug and Profiling".

Table 20-33. Core PMU Comparison

Box	Skylake, Kaby Lake and Coffee Lake Microarchitectures	Haswell and Broadwell Microarchitectures	Comment
# of Fixed counters per thread	3	3	Use CPUID to determine # of counters. See Section 20.2.1.
# of general-purpose counters per core	8	8	Use CPUID to determine # of counters. See Section 20.2.1.
Counter width (R,W)	R:48, W: 32/48	R:48, W: 32/48	See Section 20.2.2.
# of programmable counters per thread	4 or (8 if a core not shared by two threads)	4 or (8 if a core not shared by two threads)	Use CPUID to determine # of counters. See Section 20.2.1.
Architectural Perfmon version	4	3	See Section 20.2.4
PMI Overhead Mitigation	▪ Freeze_Perfmon_on_PMI with streamlined semantics. ▪ Freeze_LBR_on_PMI with streamlined semantics. ▪ Freeze_while_SMM.	▪ Freeze_Perfmon_on_PMI with legacy semantics. ▪ Freeze_LBR_on_PMI with legacy semantics for branch profiling. ▪ Freeze_while_SMM.	See Section 18.4.7. Legacy semantics not supported with version 4 or higher.
Counter and Buffer Overflow Status Management	▪ Query via IA32_PERF_GLOBAL_STATUS ▪ Reset via IA32_PERF_GLOBAL_STATUS_RESET ▪ Set via IA32_PERF_GLOBAL_STATUS_SET	▪ Query via IA32_PERF_GLOBAL_STATUS ▪ Reset via IA32_PERF_GLOBAL_OVF_CTRL	See Section 20.2.4.

Table 20-33. Core PMU Comparison (Contd.)

Box	Skylake, Kaby Lake and Coffee Lake Microarchitectures	Haswell and Broadwell Microarchitectures	Comment
IA32_PERF_GLOBAL_STATUS Indicators of Overflow/Overhead/Interference	▪ Individual counter overflow ▪ PEBS buffer overflow ▪ ToPA buffer overflow ▪ CTR_Frz, LBR_Frz, ASCI	▪ Individual counter overflow ▪ PEBS buffer overflow ▪ ToPA buffer overflow (applicable to Broadwell microarchitecture)	See Section 20.2.4.
Enable control in IA32_PERF_GLOBAL_STATUS	▪ CTR_Frz ▪ LBR_Frz	NA	See Section 20.2.4.1.
Perfmon Counter In-Use Indicator	Query IA32_PERF_GLOBAL_INUSE	NA	See Section 20.2.4.3.
Precise Events	See Table 20-36.	See Table 20-12.	IA32_PMC4-PMC7 do not support PEBS.
PEBS for front end events	See Section 20.3.8.2.	No	
LBR Record Format Encoding	000101b	000100b	Section 18.4.8.1
LBR Size	32 entries	16 entries	
LBR Entry	From_IP/To_IP/LBR_Info triplet	From_IP/To_IP pair	Section 18.12
LBR Timing	Yes	No	Section 18.12.1
Call Stack Profiling	Yes, see Section 18.11	Yes, see Section 18.11	Use LBR facility.
Off-core Response Event	MSR 1A6H and 1A7H; Extended request and response types.	MSR 1A6H and 1A7H; Extended request and response types.	
Intel TSX support for Perfmon	See Section 20.3.6.5.	See Section 20.3.6.5.	

20.3.8.1 Processor Event Based Sampling (PEBS) Facility

The PEBS facility in the 6th generation, 7th generation and 8th generation Intel Core processors provides a number enhancement relative to PEBS in processors based on Haswell/Broadwell microarchitectures. The key components and differences of PEBS facility relative to Haswell/Broadwell microarchitecture is summarized in Table 20-34.

Table 20-34. PEBS Facility Comparison

Box	Skylake, Kaby Lake and Coffee Lake Microarchitectures	Haswell and Broadwell Microarchitectures	Comment
Valid IA32_PMCx	PMC0-PMC3	PMC0-PMC3	No PEBS on PMC4-PMC7.
PEBS Buffer Programming	Section 20.3.1.1.1	Section 20.3.1.1.1	Unchanged
IA32_PEBS_ENABLE Layout	Figure 20-15	Figure 20-15	
PEBS-EventingIP	Yes	Yes	
PEBS record format encoding	0011b	0010b	
PEBS record layout	Table 20-35; enhanced fields at offsets 98H- B8H; and TSC record field at C0H.	Table 20-24; enhanced fields at offsets 98H, A0H, A8H, B0H.	
Multi-counter PEBS resolution	PEBS record 90H resolves the eventing counter overflow.	PEBS record 90H reflects IA32_PERF_GLOBAL_STATUS.	
Precise Events	See Table 20-36.	See Table 20-12.	IA32_PMC4-IA32_PMC7 do not support PEBS.

Table 20-34. PEBS Facility Comparison (Contd.)

Box	Skylake, Kaby Lake and Coffee Lake Microarchitectures	Haswell and Broadwell Microarchitectures	Comment
PEBS-PDIR	Yes	Yes	IA32_PMC1 only.
PEBS-Load Latency	See Section 20.3.4.4.2.	See Section 20.3.4.4.2.	
Data Address Profiling	Yes	Yes	
FrontEnd event support	FrontEnd_Retried event and MSR_PEBS_FRONTEND.	No	IA32_PMC0-PMC3 only.

Only IA32_PMC0 through IA32_PMC3 support PEBS.

NOTES

Precise events are only valid when the following fields of IA32_PERFEVTSELx are all zero: AnyThread, Edge, Invert, CMask.

In a PMU with PDIR capability, PEBS behavior is unpredictable if IA32_PERFEVTSELx or IA32_PMCx is changed for a PEBS-enabled counter while an event is being counted. To avoid this, changes to the programming or value of a PEBS-enabled counter should be performed when the counter is disabled.

20.3.8.1.1 PEBS Data Format

The PEBS record format for the 6th generation, 7th generation and 8th generation Intel Core processors is reporting with encoding 0011b in IA32_PERF_CAPABILITIES[11:8]. The lay out is shown in Table 20-35. The PEBS record format, along with debug/store area storage format, does not change regardless of whether IA-32e mode is active or not. CPUID.01H:ECX.DTES64[bit 2] reports whether the processor's DS storage format support is mode-independent. When set, it uses 64-bit DS storage format.

Table 20-35. PEBS Record Format for 6th Generation, 7th Generation and 8th Generation Intel Core Processor Families

Byte Offset	Field	Byte Offset	Field
00H	R/EFLAGS	68H	R11
08H	R/EIP	70H	R12
10H	R/EAX	78H	R13
18H	R/EBX	80H	R14
20H	R/ECX	88H	R15
28H	R/EDX	90H	Applicable Counter
30H	R/ESI	98H	Data Linear Address
38H	R/EDI	A0H	Data Source Encoding
40H	R/EBP	A8H	Latency value (core cycles)
48H	R/ESP	B0H	EventingIP
50H	R8	B8H	TX Abort Information (Section 20.3.6.5.1)
58H	R9	C0H	TSC
60H	R10		

The layout of PEBS records are largely identical to those shown in Table 20-24.

The PEBS records at offsets 98H, A0H, and ABH record data gathered from three of the PEBS capabilities in prior processor generations: load latency facility (Section 20.3.4.4.2), PDIR (Section 20.3.4.4.4), and data address profiling (Section 20.3.6.3).

In the core PMU of the 6th generation, 7th generation and 8th generation Intel Core processors, load latency facility and PDIR capabilities and data address profiling are unchanged relative to the 4th generation and 5th generation Intel Core processors. Similarly, precise store is replaced by data address profiling.

With format 0010b, a snapshot of the IA32_PERF_GLOBAL_STATUS may be useful to resolve the situations when more than one of IA32_PMICx have been configured to collect PEBS data and two consecutive overflows of the PEBS-enabled counters are sufficiently far apart in time. It is also possible for the image at 90H to indicate multiple PEBS-enabled counters have overflowed. In the latter scenario, software cannot to correlate the PEBS record entry to the multiple overflowed bits.

With PEBS record format encoding 0011b, offset 90H reports the "applicable counter" field, which is a multi-counter PEBS resolution index allowing software to correlate the PEBS record entry with the eventing PEBS overflow when multiple counters are configured to record PEBS records. Additionally, offset C0H captures a snapshot of the TSC that provides a time line annotation for each PEBS record entry.

20.3.8.1.2 PEBS Events

The list of precise events supported for PEBS in the Skylake, Kaby Lake and Coffee Lake microarchitectures is shown in Table 20-36.

Table 20-36. Precise Events for the Skylake, Kaby Lake and Coffee Lake Microarchitectures

Event Name	Event Select	Sub-event	UMask
INST_RETIRED	C0H	PREC_DIST[1]	01H
		ALL_CYCLES[2]	01H
OTHER_ASSISTS	C1H	ANY	3FH
BR_INST_RETIRED	C4H	CONDITIONAL	01H
		NEAR_CALL	02H
		ALL_BRANCHES	04H
		NEAR_RETURN	08H
		NEAR_TAKEN	20H
		FAR_BRACHES	40H
BR_MISP_RETIRED	C5H	CONDITIONAL	01H
		ALL_BRANCHES	04H
		NEAR_TAKEN	20H
FRONTEND_RETIRED	C6H	<Programmable[3]>	01H
HLE_RETIRED	C8H	ABORTED	04H
RTM_RETIRED	C9H	ABORTED	04H
MEM_INST_RETIRED[2]	D0H	LOCK_LOADS	21H
		SPLIT_LOADS	41H
		SPLIT_STORES	42H
		ALL_LOADS	81H
		ALL_STORES	82H

Table 20-36. Precise Events for the Skylake, Kaby Lake and Coffee Lake Microarchitectures (Contd.)

Event Name	Event Select	Sub-event	UMask
MEM_LOAD_RETIRED[4]	D1H	L1_HIT	01H
		L2_HIT	02H
		L3_HIT	04H
		L1_MISS	08H
		L2_MISS	10H
		L3_MISS	20H
		HIT_LFB	40H
MEM_LOAD_L3_HIT_RETIRED[2]	D2H	XSNP_MISS	01H
		XSNP_HIT	02H
		XSNP_HITM	04H
		XSNP_NONE	08H

NOTES:

1. Only available on IA32_PMC1.
2. INST_RETIRED.ALL_CYCLES is configured with additional parameters of cmask = 10 and INV = 1
3. Subevents are specified using MSR_PEBS_FRONTEND, see Section 20.3.8.3
4. Instruction with at least one load uop experiencing the condition specified in the UMask.

20.3.8.1.3 Data Address Profiling

The PEBS Data address profiling on the 6th generation, 7th generation and 8th generation Intel Core processors is largely unchanged from the prior generation. When the DataLA facility is enabled, the relevant information written into a PEBS record affects entries at offsets 98H, A0H, and A8H, as shown in Table 20-26.

Table 20-37. Layout of Data Linear Address Information In PEBS Record

Field	Offset	Description
Data Linear Address	98H	The linear address of the load or the destination of the store.
Store Status	A0H	▪ **DCU Hit** (Bit 0): The store hit the data cache closest to the core (L1 cache) if this bit is set, otherwise the store missed the data cache. This information is valid only for the following store events: UOPS_RETIRED.ALL (if store is tagged), MEM_INST_RETIRED.STLB_MISS_STORES, MEM_INST_RETIRED.ALL_STORES, MEM_INST_RETIRED.SPLIT_STORES. ▪ Other bits are zero.
Reserved	A8H	Always zero.

20.3.8.2 Frontend Retired Facility

The Skylake Core PMU has been extended to cover common microarchitectural conditions related to the front end pipeline in addition to providing a generic latency mechanism that can locate fetch bubbles without necessarily attributing them to a particular condition. The facility counts the events if the associated instruction reaches retirement (architecturally committed). Additionally, the user may opt to enable the PEBS facility to obtain precise information on the context of the event, e.g., EventingIP.

The supported frontend microarchitectural conditions require the following interfaces:

- The IA32_PERFEVTSELx MSR must select the FRONTEND_RETIRED event, EventSelect = C6H and UMASK = 01H.

- This event employs a new MSR, MSR_PEBS_FRONTEND, to specify the supported frontend event details, see Table 20-38.
- If precise information is desired, program the PEBS_EN_PMCx field of IA32_PEBS_ENABLE MSR as required.

Note the AnyThread field of IA32_PERFEVTSELx is ignored by the processor for the "FRONTEND_RETIRED" event.

The sub-event encodings supported by MSR_PEBS_FRONTEND.EVTSEL is given in Table 20-38.

Table 20-38. FrontEnd_Retired Sub-Event Encodings Supported by MSR_PEBS_FRONTEND.EVTSEL

Sub-Event Name	EVTSEL	Description
ANY_DSB_MISS	1H	Retired Instructions which experienced any decode stream buffer (DSB) miss.
DSB_MISS	11H	Retired Instructions which experienced a DSB miss that caused a fetch starvation cycle.
L1I_MISS	12H	The fetch of retired Instructions which experienced Instruction L1 Cache true miss[1]. Additional requests to the same cache line as an in-flight L1I cache miss will not be counted.
L2_MISS	13H	The fetch of retired Instructions which experienced L2 Cache true miss. Additional requests to the same cache line as an in-flight MLC cache miss will not be counted.
ITLB_MISS	14H	The fetch of retired Instructions which experienced ITLB true miss. Additional requests to the same cache line as an in-flight ITLB miss will not be counted.
STLB_MISS	15H	The fetch of retired Instructions which experienced STLB true miss. Additional requests to the same cache line as an in-flight STLB miss will not be counted.
IDQ_READ_BUBBLES	6H	An IDQ read bubble is defined as any one of the 4 allocation slots of IDQ that is not filled by the front-end on any cycle where there is no back end stall. Using the threshold and latency fields in MSR_PEBS_FRONTEND allows counting of IDQ read bubbles of various magnitude and duration. Latency controls the number of cycles and Threshold controls the number of allocation slots that contain bubbles. The event counts if and only if a sequence of at least FE_LATENCY consecutive cycles contain at least FE_TRESHOLD number of bubbles each.

NOTES:

1. A true miss is the first miss for a cacheline/page (excluding secondary misses that fall into same cacheline/page).

The layout of MSR_PEBS_FRONTEND is given in Table 20-39.

Table 20-39. MSR_PEBS_FRONTEND Layout

Bit Name	Offset	Description
EVTSEL	7:0	Encodes the sub-event within FrontEnd_Retired that can use PEBS facility, see Table 20-38.
IDQ_Bubble_Length	19:8	Specifies the threshold of continuously elapsed cycles for the specified width of bubbles when counting IDQ_READ_BUBBLES event.
IDQ_Bubble_Width	22:20	Specifies the threshold of simultaneous bubbles when counting IDQ_READ_BUBBLES event.
Reserved	63:23	Reserved

The FRONTEND_RETIRED event is designed to help software developers identify exact instructions that caused front-end issues. There are some instances in which the event will, by design, the under-counting scenarios include the following:

- The event counts only retired (non-speculative) front-end events, i.e., events from just true program execution path are counted.
- The event will count once per cacheline (at most). If a cacheline contains multiple instructions which caused front-end misses, the count will be only 1 for that line.
- If the multibyte sequence of an instruction spans across two cachelines and causes a miss it will be recorded once. If there were additional misses in the second cacheline, they will not be counted separately.

- If a multi-uop instruction exceeds the allocation width of one cycle, the bubbles associated with these uops will be counted once per that instruction.
- If 2 instructions are fused (macro-fusion), and either of them or both cause front-end misses, it will be counted once for the fused instruction.
- If a front-end (miss) event occurs outside instruction boundary (e.g., due to processor handling of architectural event), it may be reported for the next instruction to retire.

20.3.8.3 Off-core Response Performance Monitoring

The core PMU facility to collect off-core response events are similar to those described in Section 20.3.4.5. Each event code for off-core response monitoring requires programming an associated configuration MSR, MSR_OFFCORE_RSP_x. Software must program MSR_OFFCORE_RSP_x according to:

- Transaction request type encoding (bits 15:0): see Table 20-40.
- Supplier information (bits 29:16): see Table 20-41.
- Snoop response information (bits 37:30): see Table 20-42.

Table 20-40. MSR_OFFCORE_RSP_x Request_Type Definition (Skylake, Kaby Lake, and Coffee Lake Microarchitectures)

Bit Name	Offset	Description
DMND_DATA_RD	0	Counts the number of demand data reads and page table entry cacheline reads. Does not count hw or sw prefetches.
DMND_RFO	1	Counts the number of demand reads for ownership (RFO) requests generated by a write to data cacheline. Does not count L2 RFO prefetches.
DMND_IFETCH	2	Counts the number of demand instruction cacheline reads and L1 instruction cacheline prefetches.
Reserved	14:3	Reserved
OTHER	15	Counts miscellaneous requests, such as I/O and un-cacheable accesses.

Table 20-41 lists the supplier information field that applies to 6th generation, 7th generation and 8th generation Intel Core processors. (6th generation Intel Core processor CPUID signatures: 06_4EH and 06_5EH; 7th generation and 8th generation Intel Core processor CPUID signatures: 06_8EH and 06_9EH).

Table 20-41. MSR_OFFCORE_RSP_x Supplier Info Field Definition (CPUID Signatures 06_4EH, 06_5EH, 06_8EH, and 06_9EH)

Subtype	Bit Name	Offset	Description
Common	Any	16	Catch all value for any response types.
Supplier Info	NO_SUPP	17	No Supplier Information available.
	L3_HITM	18	M-state initial lookup stat in L3.
	L3_HITE	19	E-state
	L3_HITS	20	S-state
	Reserved	21	Reserved
	L4_HIT	22	L4 Cache (if L4 is present in the processor).
	Reserved	25:23	Reserved
	DRAM	26	Local Node
	Reserved	29:27	Reserved
	SPL_HIT	30	L4 cache super line hit (if L4 is present in the processor).

Table 20-42 lists the snoop information field that apply to processors with CPUID signatures 06_4EH, 06_5EH, 06_8EH, 06_9E, and 06_55H.

Table 20-42. MSR_OFFCORE_RSP_x Snoop Info Field Definition (CPUID Signatures 06_4EH, 06_5EH, 06_8EH, 06_9E, and 06_55H)

Subtype	Bit Name	Offset	Description
Snoop Info	SPL_HIT	30	L4 cache super line hit (if L4 is present in the processor).
	SNOOP_NONE	31	No details on snoop-related information.
	SNOOP_NOT_NEEDED	32	No snoop was needed to satisfy the request.
	SNOOP_MISS	33	A snoop was needed and it missed all snooped caches: -For LLC Hit, ReslHitI was returned by all cores. -For LLC Miss, RspI was returned by all sockets and data was returned from DRAM.
	SNOOP_HIT_NO_FWD	34	A snoop was needed and it hits in at least one snooped cache. Hit denotes a cache-line was valid before snoop effect. This includes: -Snoop Hit w/ Invalidation (LLC Hit, RFO). -Snoop Hit, Left Shared (LLC Hit/Miss, IFetch/Data_RD). -Snoop Hit w/ Invalidation and No Forward (LLC Miss, RFO Hit S). In the LLC Miss case, data is returned from DRAM.
	SNOOP_HIT_WITH_FWD	35	A snoop was needed and data was forwarded from a remote socket. This includes: -Snoop Forward Clean, Left Shared (LLC Hit/Miss, IFetch/Data_RD/RFT).
	SNOOP_HITM	36	A snoop was needed and it HitM-ed in local or remote cache. HitM denotes a cache-line was in modified state before effect as a results of snoop. This includes: -Snoop HitM w/ WB (LLC miss, IFetch/Data_RD). -Snoop Forward Modified w/ Invalidation (LLC Hit/Miss, RFO). -Snoop MtoS (LLC Hit, IFetch/Data_RD).
	SNOOP_NON_DRAM	37	Target was non-DRAM system address. This includes MMIO transactions.

20.3.8.3.1 Off-core Response Performance Monitoring for the Intel® Xeon® Scalable Processor Family

The following tables list the requestor and supplier information fields that apply to the Intel® Xeon® Scalable Processor Family.

- Transaction request type encoding (bits 15:0): see Table 20-43.
- Supplier information (bits 29:16): see Table 20-44.
- Supplier information (bits 29:16) with support for Intel® Optane™ DC Persistent Memory support: see Table 20-45.
- Snoop response information has not been changed and is the same as in (bits 37:30): see Table 20-42.

Table 20-43. MSR_OFFCORE_RSP_x Request_Type Definition (Intel® Xeon® Scalable Processor Family)

Bit Name	Offset	Description
DEMAND_DATA_RD	0	Counts the number of demand data reads and page table entry cacheline reads. Does not count hw or sw prefetches.
DEMAND_RFO	1	Counts the number of demand reads for ownership (RFO) requests generated by a write to data cacheline. Does not count L2 RFO prefetches.
DEMAND_CODE_RD	2	Counts the number of demand instruction cacheline reads and L1 instruction cacheline prefetches.
Reserved	3	Reserved.
PF_L2_DATA_RD	4	Counts the number of prefetch data reads into L2.
PF_L2_RFO	5	Counts the number of RFO Requests generated by the MLC prefetches to L2.
Reserved	6	Reserved.
PF_L3_DATA_RD	7	Counts the number of MLC data read prefetches into L3.
PF_L3_RFO	8	Counts the number of RFO requests generated by MLC prefetches to L3.
Reserved	9	Reserved.
PF_L1D_AND_SW	10	Counts data cacheline reads generated by hardware L1 data cache prefetcher or software prefetch requests.
Reserved	14:11	Reserved.
OTHER	15	Counts miscellaneous requests, such as I/O and un-cacheable accesses.

Table 20-44 lists the supplier information field that applies to the Intel Xeon Scalable Processor Family (CPUID signature: 06_55H).

Table 20-44. MSR_OFFCORE_RSP_x Supplier Info Field Definition (CPUID Signature 06_55H)

Subtype	Bit Name	Offset	Description
Common	Any	16	Catch all value for any response types.
Supplier Info	SUPPLIER_NONE	17	No Supplier Information available.
	L3_HIT_M	18	M-state initial lookup stat in L3.
	L3_HIT_E	19	E-state
	L3_HIT_S	20	S-state
	L3_HIT_F	21	F-state
	Reserved	25:22	Reserved
	L3_MISS_LOCAL_DRAM	26	L3 Miss: local home requests that missed the L3 cache and were serviced by local DRAM.
	L3_MISS_REMOTE_HOP0_DRAM	27	Hop 0 Remote supplier.
	L3_MISS_REMOTE_HOP1_DRAM	28	Hop 1 Remote supplier.
	L3_MISS_REMOTE_HOP2P_DRAM	29	Hop 2 or more Remote supplier.
	Reserved	30	Reserved

Table 20-45 lists the supplier information field that applies to the Intel Xeon Scalable Processor Family (CPUID signature: 06_55H, Steppings 0x5H - 0xFH).

Table 20-45. MSR_OFFCORE_RSP_x Supplier Info Field Definition (CPUID Signature 06_55H, Steppings 0x5H - 0xFH)

Subtype	Bit Name	Offset	Description
Common	Any	16	Catch all value for any response types.
Supplier Info	SUPPLIER_NONE	17	No Supplier Information available.
	L3_HIT_M	18	M-state initial lookup stat in L3.
	L3_HIT_E	19	E-state
	L3_HIT_S	20	S-state
	L3_HIT_F	21	F-state
	LOCAL_PMM	22	Local home requests that were serviced by local PMM.
	REMOTE_HOP0_PMM	23	Hop 0 Remote supplier.
	REMOTE_HOP1_PMM	24	Hop 1 Remote supplier.
	REMOTE_HOP2P_PMM	25	Hop 2 or more Remote supplier.
	L3_MISS_LOCAL_DRAM	26	L3 Miss: Local home requests that missed the L3 cache and were serviced by local DRAM.
	L3_MISS_REMOTE_HOP0_DRAM	27	Hop 0 Remote supplier.
	L3_MISS_REMOTE_HOP1_DRAM	28	Hop 1 Remote supplier.
	L3_MISS_REMOTE_HOP2P_DRAM	29	Hop 2 or more Remote supplier.
	Reserved	30	Reserved

20.3.8.4 Uncore Performance Monitoring Facilities on Intel® Core™ Processors Based on Cannon Lake Microarchitecture

Cannon Lake microarchitecture introduces LLC support of up to six processor cores. To support six processor cores and eight LLC slices, existing MSRs have been rearranged and new CBo MSRs have been added. Uncore performance monitoring software drivers from prior generations of Intel Core processors will need to update the MSR addresses. The new MSRs and updated MSR addresses have been added to the Uncore PMU listing in Section 2.17.2, "MSRs Specific to 8th Generation Intel® Core™ i3 Processors" in *Intel® 64 and IA-32 Architectures Software Developer's Manual, Volume 4*.

20.3.9 10th Generation Intel® Core™ Processor Performance Monitoring Facility

Some 10th generation Intel® Core™ processors and some 3rd generation Intel® Xeon® Scalable Processor Family are based on Ice Lake microarchitecture. Some 11th generation Intel® Core™ processors are based on the Tiger Lake microarchitecture, and some are based on the Rocket Lake microarchitecture. For these processors, the core PMU supports architectural performance monitoring capability with version Id 5 (see Section 20.2.5) and a host of non-architectural monitoring capabilities.

The core PMU's capability is similar to those described in Section 20.3.1 through Section 20.3.8, with some differences and enhancements summarized in Table 20-46.

Table 20-46. Core PMU Summary of the Ice Lake Microarchitecture

Box	Ice Lake Microarchitecture	Skylake, Kaby Lake and Coffee Lake Microarchitectures	Comment
Architectural Perfmon version	5	4	See Section 20.2.5.
PEBS: Basic functionality	Yes	Yes	See Section 20.3.9.1.

Table 20-46. Core PMU Summary of the Ice Lake Microarchitecture

Box	Ice Lake Microarchitecture	Skylake, Kaby Lake and Coffee Lake Microarchitectures	Comment
PEBS record format encoding	0100b	0011b	See Section 20.6.2.4.2.
Extended PEBS	PEBS is extended to all Fixed and General Purpose counters and to all performance monitoring events.	No	See Section 20.9.1.
Adaptive PEBS	Yes	No	See Section 20.9.2.
Performance Metrics	Yes (4)	No	See Section 20.3.9.3.
PEBS-PDIR	IA32_FIXED0 only (Corresponding counter control MSRs must be enabled.)	IA32_PMC1 only.	

20.3.9.1 Processor Event Based Sampling (PEBS) Facility

The PEBS facility in the 10th generation Intel Core processors provides a number of enhancements relative to PEBS in processors based on the Skylake, Kaby Lake, and Coffee Lake microarchitectures. Enhancement of the PEBS facility with Extended PEBS and Adaptive PEBS features is described in detail in Section 20.9.

The 3rd generation Intel Xeon Scalable Family of processors based on the Ice Lake microarchitecture introduce EPT-friendly PEBS. This allows EPT violations and other VM Exits to be taken on PEBS accesses to the DS Area. See Section 20.9.5 for details.

20.3.9.2 Off-core Response Performance Monitoring

The core PMU facility to collect off-core response events are similar to those described in Section 20.3.4.5. Each event code for off-core response monitoring requires programming an associated configuration MSR, MSR_OFFCORE_RSP_x. Software must program MSR_OFFCORE_RSP_x according to:

- Transaction request type encoding (bits 15:0): see Table 18-[N1].
- Response type encoding (bits 16-37) of
  - Supplier information: see Table [18-N2].
  - Snoop response information: see Table [18-N3].
- All transactions are tracked at cacheline granularity except some in request type OTHER.

Table 20-47. MSR_OFFCORE_RSP_x Request_Type Definition (Processors Based on Ice Lake Microarchitecture)

Bit Name	Offset	Description
DEMAND_DATA_RD	0	Counts demand data and page table entry reads.
DEMAND_RFO	1	Counts demand read (RFO) and software prefetches (PREFETCHW) for exclusive ownership in anticipation of a write.
DEMAND_CODE_RD	2	Counts demand instruction fetches and instruction prefetches targeting the L1 instruction cache.
Reserved	3	Reserved
HWPF_L2_DATA_RD	4	Counts hardware generated data read prefetches targeting the L2 cache.
HWPF_L2_RFO	5	Counts hardware generated prefetches for exclusive ownership (RFO) targeting the L2 cache.
Reserved	6	Reserved
HWPF_L3	9:7 and 13[1]	Counts hardware generated prefetches of any type targeting the L3 cache.

Table 20-47. MSR_OFFCORE_RSP_x Request_Type Definition (Processors Based on Ice Lake Microarchitecture)

Bit Name	Offset	Description
HWPF_L1D_AND_SWPF	10	Counts hardware generated data read prefetches targeting the L1 data cache and the following software prefetches (PREFETCHNTA, PREFETCHT0/1/2).
STREAMING_WR	11	Counts streaming stores.
Reserved	12	Reserved
Reserved	14	Reserved
OTHER	15	Counts miscellaneous requests, such as I/O and un-cacheable accesses.

NOTES:
1. All bits need to be set to 1 to count this type.

Ice Lake microarchitecture has added a new category of Response subtype, called a Combined Response Info. To count a feature in this type, all the bits specified must be set to 1.

A valid response type must be a non-zero value of the following expression:

Any | ['OR' of Combined Response Info Bits | [('OR' of Supplier Info Bits) & ('OR' of Snoop Info Bits)]]

If "ANY" bit[16] is set, other response type bits [17-39] are ignored.

Table 20-48 lists the supplier information field that applies to processors based on Ice Lake microarchitecture.

Table 20-48. MSR_OFFCORE_RSP_x Supplier Info Field Definition (Processors Based on Ice Lake Microarchitecture)

Subtype	Bit Name	Offset	Description
Common	Any	16	Catch all value for any response types.
Combined Response Info	DRAM	26, 31, 32[1]	Requests that are satisfied by DRAM.
	NON_DRAM	26, 37[1]	Requests that are satisfied by a NON_DRAM system component. This includes MMIO transactions.
	L3_MISS	22, 23, 24, 25, 26, 27, 28, 29, 30, 31, 32, 33, 34, 35, 36, 37[1]	Requests that were not supplied by the L3 Cache. The event includes some currently reserved bits in anticipation of future memory designs.
Supplier Info	L3_HIT	18,19, 20[1]	Requests that hit in L3 cache. Depending on the snoop response the L3 cache may have retrieved the cacheline from another core's cache.
Reserved		17, 21:25, 27:29	Reserved.

NOTES:
1. All bits need to be set to 1 to count this type.

Table 20-49 lists the snoop information field that applies to processors based on Ice Lake microarchitecture.

Table 20-49. MSR_OFFCORE_RSP_x Snoop Info Field Definition (Processors Based on Ice Lake Microarchitecture)

Subtype	Bit Name	Offset	Description
Snoop Info	Reserved	30	Reserved.
	SNOOP_NOT_NEEDED	32	No snoop was needed to satisfy the request.
	SNOOP_MISS	33	A snoop was sent and none of the snooped caches contained the cacheline.
	SNOOP_HIT_NO_FWD	34	A snoop was sent and hit in at least one snooped cache. The unmodified cacheline was not forwarded back, because the L3 already has a valid copy.
	Reserved	35	Reserved.
	SNOOP_HITM	36	A snoop was sent and the cacheline was found modified in another core's caches. The modified cacheline was forwarded to the requesting core.

20.3.9.3 Performance Metrics

The Ice Lake core PMU provides built-in support for Top-down Microarchitecture Analysis (TMA) method level 1 metrics. These metrics are always available to cross-validate performance observations, freeing general purpose counters to count other events in high counter utilization scenarios. For more details about the method, refer to Top-Down Analysis Method chapter (Appendix B.1) of the *Intel® 64 and IA-32 Architectures Optimization Reference Manual*.

A new MSR called MSR_PERF_METRICS reports the metrics directly. Software can check (and/or expose to its guests) the availability of the PERF_METRICS feature using IA32_PERF_CAPABILITIES.PERF_METRICS_AVAILABLE (bit 15). For additional details on this MSR, refer to Chapter 2, "Model-Specific Registers (MSRs)" in the *Intel® 64 and IA-32 Architectures Software Developer's Manual, Volume 4*.

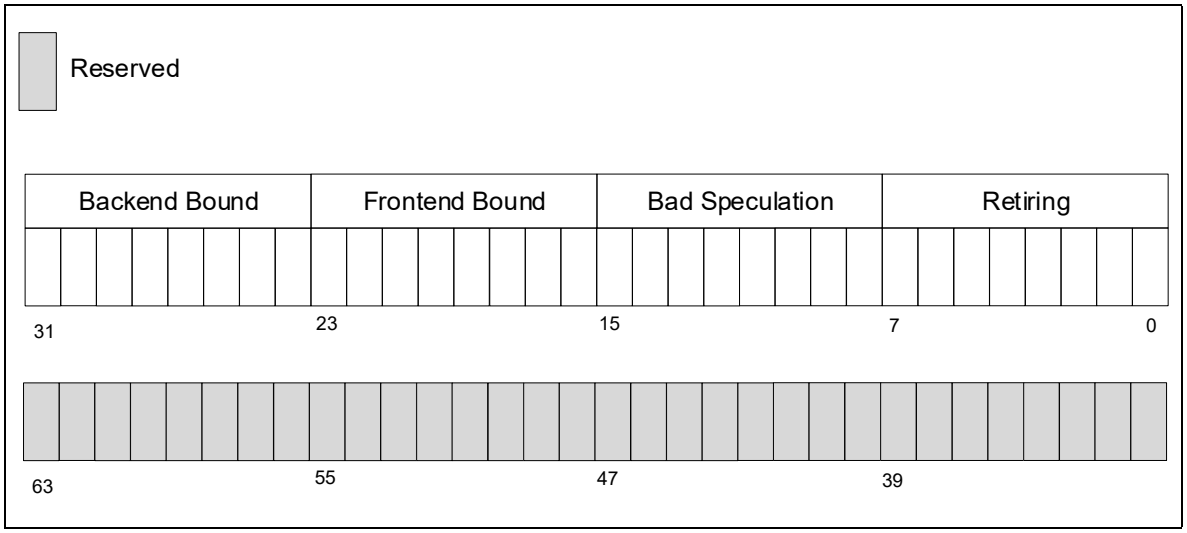

Figure 20-37. MSR_PERF_METRICS Definition

This register exposes the four TMA Level 1 metrics. The lower 32 bits are divided into four 8-bit fields, as shown by the above figure, each of which is an integer fraction of 255.

To support built-in performance metrics, new bits have been added to the following MSRs:

- IA32_PERF_GLOBAL_CTRL. EN_PERF_METRICS[48]: If this bit is set and fixed-function performance-monitoring counter 3 is enabled, built-in performance metrics are enabled.
- IA32_PERF_GLOBAL_STATUS_SET. SET_OVF_PERF_METRICS[48]: If this bit is set, it will set the status bit in the IA32_PERF_GLOBAL_STATUS register for PERF_METRICS.
- IA32_PERF_GLOBAL_STATUS_RESET. RESET_OVF_PERF_METRICS[48]: If this bit is set, it will clear the status bit in the IA32_PERF_GLOBAL_STATUS register for PERF_METRICS.
- IA32_PERF_GLOBAL_STATUS. OVF_PERF_METRICS[48]: If this bit is set, it indicates that a PERF_METRICS-related resource has overflowed and a PMI is triggered[1]. If this bit is clear, no such overflow has occurred.

NOTE

Software has to synchronize, e.g., re-start, fixed-function performance-monitoring counter 3 as well as PERF_METRICS when either bit 35 or 48 in IA32_PERF_GLOBAL_STATUS is set. Otherwise, PERF_METRICS may return undefined values.

The values in MSR_PERF_METRICS are derived from fixed-function performance-monitoring counter 3. Software should start both registers, PERF_METRICS and fixed-function performance-monitoring counter 3, from zero. Additionally, software is recommended to periodically clear both registers in order to maintain accurate measurements for certain scenarios that involve sampling metrics at high rates.

In order to save/restore PERF_METRICS, software should follow these guidelines:

- PERF_METRICS and fixed-function performance-monitoring counter 3 should be saved and restored together.
- To ensure that PERF_METRICS and fixed-function performance-monitoring counter 3 remain synchronized, both should be disabled during both save and restore. Software should enable/disable them atomically, with a single write to IA32_PERF_GLOBAL_CTRL to set/clear both EN_PERF_METRICS[bit 48] and EN_FIXED_CTR3[bit 35].
- On state restore, fixed-function performance-monitoring counter 3 must be restored **before** PERF_METRICS, otherwise undefined results may be observed.

20.3.10 12th and 13th Generation Intel® Core™ Processors, and 4th Generation Intel® Xeon® Scalable Processor Family Performance Monitoring Facility

The 12th generation Intel® Core™ processor supports Alder Lake performance hybrid architecture. These processors offer a unique combination of Performance and Efficient-cores (P-core and E-core). The P-core is based on Golden Cove microarchitecture and the E-core is based on Gracemont microarchitecture. The 13th generation Intel® Core™ processor supports Raptor Lake performance hybrid architecture, utilizing both Raptor Cove cores and enhanced Gracemont cores. The 4th generation Intel® Xeon® Scalable Processor Family is based on Sapphire Rapids microarchitecture utilizing Golden Cove cores. These processors all report architectural performance monitoring version ID = 5 and support non-architectural monitoring capabilities described in this section.

20.3.10.1 P-core Performance Monitoring Unit

The P-core PMU's capability is similar to those described in Section 20.3.1 through Section 20.3.9, with some differences and enhancements summarized in Table 20-50.

1. An overflow of fixed-function performance-monitoring counter 3 should normally happen first if software follows Intel's recommendations.

Table 20-50. Core PMU Summary of the Golden Cove Microarchitecture

Box	Golden Cove Microarchitecture	Ice Lake Microarchitecture	Comment
Architectural Perfmon version	5	5	See Section 20.2.5.
Event-Counter Restrictions	Simplified identification		Counters 4-7 support a subset of events. See Section 20.3.10.1.2.
Performance Metrics	Yes (12)	Yes (4)	See Section 20.3.9.3.
PEBS: Baseline, record format	Yes 0100b	Yes 0100b	See Section 20.3.9.
PEBS: EPT-friendly	Yes	No; debuts in Ice Lake server microarchitecture	See Section 20.6.2.4.2.
PEBS: Precise Distribution	IA32_FIXED0 instruction-granularity PDist on IA32_PMC0	IA32_FIXED0 cycle-granularity No PDist	See Section 20.9.6.
PEBS: Load Latency	Instruction latency Cache latency Access info fields (5)	Instruction latency Access info fields (3)	See Section 20.9.7.
PEBS: Store Latency	Cache latency Access info fields (3)	None	See Section 20.9.8.
PEBS: Intel TSX support	Abort info fields (9)	Abort info fields (8)	See Section 20.3.6.5.1. (Intel Xeon processor only feature.)

20.3.10.1.1 P-core Perf Metrics Extensions

For 12th generation Intel Core processor P-cores, the core PMU supports the built-in metrics that were introduced in the Ice Lake microarchitecture PMU. This core PMU extends the PERF_METRICS MSR to feature TMA method level 2 metrics, as shown in Figure 20-38.

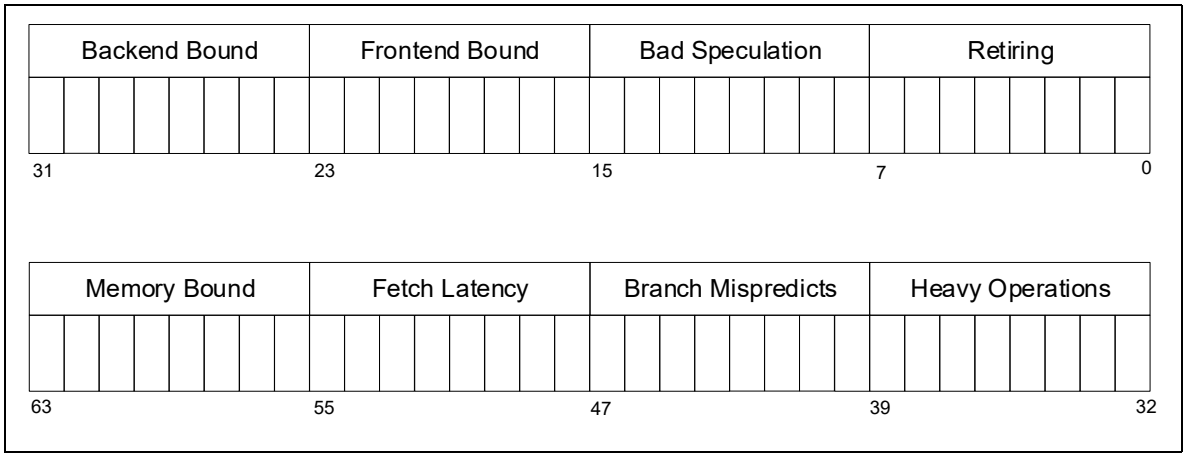

Figure 20-38. PERF_METRICS MSR Definition for 12th Generation Intel® Core™ Processor P-core

The lower half of the register is the TMA level 1 metrics (legacy). The upper half is also divided into four 8-bit fields, each of which is an integer fraction of 255. Additionally, each of the new level 2 metrics in the upper half is a subset of the corresponding level 1 metric in the lower half (that is, its parent node per the TMA hierarchy). This enables software to deduce the other four level 2 metrics by subtracting corresponding metrics as shown in Figure 20-39.

```
Light_Operations = Retiring - Heavy_Operations
Machine_Clears = Bad_Speculation - Branch_Mispredicts
Fetch_Bandwidth = Frontend_Bound - Fetch_Latency
Core_Bound = Backend_Bound - Memory_Bound
```

Figure 20-39. Deducing Implied Level 2 Metrics in the Core PMU for12th Generation Intel® Core™ Processor P-core

The PERF_METRICS MSR and fixed-function performance-monitoring counter 3 of the core PMU feature 12 metrics in total that cover all level 1 and level 2 nodes of the TMA hierarchy.

20.3.10.1.2 P-core Counter Restrictions Simplification

The 12th generation Intel Core processor P-core allows identification of performance monitoring events with counter restrictions based on event encodings. The general rule is: Event Codes < 0x90 are restricted to general-purpose performance-monitoring counters 0-3. Event Codes ≥ 0x90 are likely to have no restrictions. Table 20-51 lists the exceptions to this rule.

Table 20-51. Special Performance Monitoring Events with Counter Restrictions

Event Encoding[1]	Event Name	Counter Restriction
xx3C	CPU_CLK_UNHALTED.*	0-7 (No restriction for all architectural events.)
xx2E	LONGEST_LAT_CACHE.*	
xxDx	MEM_*_RETIRED.*	0-3
01A3, 02A3, 08A3	Some CYCLE_ACTIVITY sub-events	0-3
02CD	MEM_TRANS_RETIRED.STORE_SAMPLE	0
04A4	TOPDOWN.BAD_SPEC_SLOTS	0
08A4	TOPDOWN.BR_MISPREDICT_SLOTS	
xxCE	AMX_OPS_RETIRED	0

NOTES:

1. Linux perf rUUEE syntax, where UU is the Unit Mask field and EE is the Event Select (also known as Event Code) field in the IA32_PERFEVTSELx MSRs.

20.3.10.1.3 P-core Off-core Response Facility

For the 12th generation Intel Core processor P-core, the Off-core Response (OCR) Facility is similar to that described in Section 20.3.9.2.

The following enhancements are introduced for the Request_Type of MSR_OFFCORE_RSP_x:

- WB (bits 3 and 12): Count writeback (modified or non-modified) transactions by core caches.
- HWPF_L1D (bit 10): Counts hardware generated data read prefetches targeting the L1 data cache (only).
- SWPF_READ (bit 14): Counts software generated data read prefetches by the PREFETCHNTA and PREFETCHT0/1/2 instructions.

20.3.10.2 E-core Performance Monitoring Unit

The core PMU capabilities on the 12th generation Intel Core processor E-core are summarized in Table 20-52 below.

Table 20-52. Core PMU Summary of the Gracemont Microarchitecture

Box	Gracemont Microarchitecture	Tremont Microarchitecture	Comment
Number of fixed-function performance-monitoring counters per core	3	3	Use CPUID to enumerate number of counters. See Section 20.2.1.
Number of general-purpose counters per core	6	4	Use CPUID to enumerate number of counters. See Section 20.2.1.
Architectural Performance Monitoring version ID	5	5	See Section 20.2.5.
PEBS record format encoding	0100b	0100b	See Section 20.5.5.
EPT-friendly PEBS support	Yes	No	See Section 20.9.5.
Extended PEBS	Yes	Yes	See Section 20.9.1.
Adaptive PEBS	Yes	Yes	See Section 20.9.2.
Precise distribution (PDist) PEBS	IA32_PMC0 and IA32_FIXED_CTR0	IA32_PMC0 and IA32_FIXED_CTR0	PDist eliminates skid, see Section 20.9.3, Section 20.9.4, and Section 20.9.6.
PEBS Latency	Load and Store Latency	No	See Section 20.3.10.2.1, Section 20.3.10.2.2, Section 20.9.7, and Section 20.9.8.
PEBS Output	DS Save Area or Intel® Processor Trace	DS Save Area or Intel® Processor Trace	See Section 20.5.5.2.1.
Offcore Response	MSR 01A6H and 01A7H, each core has its own register, extended request and response types.	MSR 1A6H and 1A7H, each core has its own register, extended request and response types.	See Section 20.5.5.4.

20.3.10.2.1 E-core PEBS Load Latency

The 12th generation Intel Core processor E-core includes PEBS Load Latency support similar to that described in Section 20.9.7.

When a programmable counter is configured to count MEM_UOPS_RETIRED.LOAD_LATENCY_ABOVE_THRESHOLD (IA32_PERFEVTSELx[15:0] = 0xD005, with CMASK=0 and INV=0), selected load operations whose latency exceeds the threshold provided in MSR_PEBS_LD_LAT_THRESHOLD (MSR 03F6H) will be counted. If a PEBS record is generated on overflow of this counter, the Memory Access Latency and Memory Auxiliary Info data is reported in the Memory Access Info group (Section 20.9.2.2.2). The formats of these fields are shown in Table 20-53 and Table 20-94.

Table 20-53. E-core PEBS Memory Access Info Encoding

Bit(s)	Field	Description
3:0	Data Source	The source of the data; see Table 20-54.
4	Lock	0: The operation was not part of a locked transaction. 1: The operation was part of a locked transaction.

Table 20-53. E-core PEBS Memory Access Info Encoding (Contd.)

Bit(s)	Field	Description
5	STLB_MISS	0: The load did not miss the STLB (hit the DTLB or STLB). 1: The load missed the STLB.
6	ST_FWD_BLK	0: Load did not get a store forward block. 1: Load got a store forward block.
63:7	Reserved	Reserved

For details on E-core PEBS memory access latency encoding, see the Access Latency Field in Table 20-94.

Table 20-54. E-core PEBS Data Source Encodings

Encoding	Description
00H	Unknown Data Source (the processor could not retrieve the origin of this request) and MMIO. Memory mapped I/O hit.
01H	L1 HIT. This request was satisfied by the L1 data cache. (Minimal latency core cache hit.)
02H	FB HIT. Outstanding core cache miss to same cache-line address was already underway. (Pending core cache hit.)
03H	L2 HIT. This request was satisfied by the L2 cache.
04H	L3 HIT. Local or Remote home requests that hit L3 cache in the uncore with no coherency actions required (snooping).
05H	L3 HITE. Local or Remote home requests that hit the L3 cache and were serviced by another processor core with a cross core snoop where no modified copies were found (clean).
06H	L3 HITM. Local or Remote home requests that hit the L3 cache and were serviced by another processor core with a cross core snoop where a modified copy was found.
07H	Reserved.
08H	L3 HITF. Local or Remote home requests that hit the L3 cache and were serviced by another processor core with a cross core snoop where a shared or forwarding copy was found.
09H	Reserved.
0AH	L3 MISS. Local home requests that missed the L3 cache and were serviced by local DRAM (go to shared state).
0BH	Reserved.
0CH	Reserved.
0DH	Reserved.
0EH	I/O. Request of input/output operation.
0FH	The request was to un-cacheable memory.

20.3.10.2.2 E-core PEBS Store Latency

The 12th generation Intel Core processor E-core includes PEBS Store Latency support. When a programmable counter is configured to count MEM_UOPS_RETIRED.STORE_LATENCY (IA32_PERFEVTSELx[15:0] = 0xD006, with CMASK=0 and INV=0), all store operations will be counted. If a PEBS record is generated on overflow of this counter, the Memory Access Latency and Memory Auxiliary Info data is reported in the Memory Access Info group (Section 18.9.2.2.2). The formats of these fields are shown in Table 20-53 and Table 20-94.

20.3.10.2.3 E-core Precise Distribution (PDist) Support

The 12th generation Intel Core processor E-core supports PEBS with Precise Distribution (PDist) on IA32_PMC0 and IA32_FIXED_CTR0. All precise events support PDist save for UOPS_RETIRED. See Section 20.9.6 for additional details on PDist.

20.3.10.2.4 E-core Enhanced Off-core Response

Event number 0B7H support off-core response monitoring using an associated configuration MSR, MSR_OFFCORE_RSP0 (address 1A6H) in conjunction with UMASK value 01H or MSR_OFFCORE_RSP1 (address 1A7H) in conjunction with UMASK value 02H. There are unique pairs of MSR_OFFCORE_RSPx registers per core. The layout of MSR_OFFCORE_RSP0 and MSR_OFFCORE_RSP1 are organized as follows:

- Bits 15:0 and bits 49:44 specify the request type of a transaction request to the uncore. This is described in Table 20-55.
- Bits 30:16 specify Response Type information or an L2 Hit, and is described in Table 20-75.
- If L2 misses, then bits 37:31 can be used to specify snoop response information and is described in Table 20-76.
- For outstanding requests, bit 38 can enable measurement of average latency of specific type of offcore transaction requests using two programmable counter simultaneously; see Section 20.5.2.3 for details.

Table 20-55. MSR_OFFCORE_RSPx Request Type Definition

Bit Name	Offset	Description
DEMAND_DATA_RD	0	Counts demand data reads.
DEMAND_RFO	1	Counts all demand reads for ownership (RFO) requests and software based prefteches for exclusive ownership (prefetchw).
DEMAND_CODE_RD	2	Counts demand instruction fetches and L1 instruction cache prefetches.
COREWB_M	3	Counts modified write backs from L1 and L2.
HWPF_L2_DATA_RD	4	Counts prefetch (that bring data to L2) data reads.
HWPF_L2_RFO	5	Counts all prefetch (that bring data to L2) RFOs.
HWPF_L2_CODE_RD	6	Counts all prefetch (that bring data to MLC only) code reads.
HWPF_L3_DATA_RD	7	Counts L3 cache hardware prefetch data reads (written to the L3 cache only).
HWPF_L3_RFO	8	Counts L3 cache hardware prefetch RFOs (written to the L3 cache only) .
HWPF_L3_CODE_RD	9	Counts L3 cache hardware prefetch code reads (written to the L3 cache only).
HWPF_L1D_AND_SWPF	10	Counts L1 data cache hardware prefetch requests, read for ownership prefetch requests and software prefetch requests (except prefetchw).
STREAMING_WR	11	Counts all streaming stores.
COREWB_NONM	12	Counts non-modified write backs from L2.
RSVD	14:13	Reserved.
OTHER	15	Counts miscellaneous requests, such as I/O accesses that have any response type.
UC_RD	44	Counts uncached memory reads (PRd, UCRdF).
UC_WR	45	Counts uncached memory writes (WiL).
PARTIAL_STREAMING_WR	46	Counts partial (less than 64 byte) streaming stores (WCiL).
FULL_STREAMING_WR	47	Counts full, 64 byte streaming stores (WCiLF).
L1WB_M	48	Counts modified WriteBacks from L1 that miss the L2.
L2WB_M	49	Counts modified WriteBacks from L2.

20.3.10.3 Unhalted Reference Cycles

The Unhalted Reference Cycles architectural performance monitoring event is enhanced to count at TSC-rate in the 12th generation Intel Core processor P-core when used on a general-purpose PMC. This enhancement makes it consistent with the fixed-function counter 2 and the E-core. As a result, this event is kept enumerated in CPUID leaf 0AH.EBX (unlike prior hybrid parts).

20.4 PERFORMANCE MONITORING (INTEL® XEON™ PHI PROCESSORS)

NOTE

This section also applies to the Intel® Xeon Phi™ Processor 7215, 7285, 7295 Series based on Knights Mill microarchitecture.

20.4.1 Intel® Xeon Phi™ Processor 7200/5200/3200 Performance Monitoring

The Intel® Xeon Phi™ processor 7200/5200/3200 series are based on the Knights Landing microarchitecture. The performance monitoring capabilities are distributed between its tiles (pair of processor cores) and untile (connecting many tiles in a physical processor package). Functional details of the tiles and untile of the Knights Landing microarchitecture can be found in Chapter 16 of *Intel® 64 and IA-32 Architectures Optimization Reference Manual*.

A complete description of the tile and untile PMU programming interfaces for Intel Xeon Phi processors based on the Knights Landing microarchitecture can be found in the Technical Document section at http://www.intel.com/content/www/us/en/processors/xeon/xeon-phi-detail.html.

A tile contains a pair of cores attached to a shared L2 cache and is similar to those found in Intel Atom® processors based on the Silvermont microarchitecture. The processor provides several new capabilities on top of the Silvermont performance monitoring facilities.

The processor supports architectural performance monitoring capability with version ID 3 (see Section 20.2.3) and a host of non-architectural performance monitoring capabilities. The processor provides two general-purpose performance counters (IA32_PMC0, IA32_PMC1) and three fixed-function performance counters (IA32_FIXED_CTR0, IA32_FIXED_CTR1, IA32_FIXED_CTR2).

Non-architectural performance monitoring in the processor also uses the IA32_PERFEVTSELx MSR to configure a set of non-architecture performance monitoring events to be counted by the corresponding general-purpose performance counter.

The bit fields within each IA32_PERFEVTSELx MSR are defined in Figure 20-6 and described in Section 20.2.1.1 and Section 20.2.3. The processor supports AnyThread counting in three architectural performance monitoring events.

20.4.1.1 Enhancements of Performance Monitoring in the Intel® Xeon Phi™ processor Tile

The Intel® Xeon Phi™ processor tile includes the following enhancements to the Silvermont microarchitecture.

- AnyThread support. This facility is limited to following three architectural events: Instructions Retired, Unhalted Core Cycles, Unhalted Reference Cycles using IA32_FIXED_CTR0-2 and Unhalted Core Cycles, Unhalted Reference Cycles using IA32_PERFEVTSELx.
- PEBS-DLA (Processor Event-Based Sampling-Data Linear Address) fields. The processor provides memory address in addition to the Silvermont PEBS record support on select events. The PEBS recording format as reported by IA32_PERF_CAPABILITIES [11:8] is 2.
- Off-core response counting facility. This facility in the processor core allows software to count certain transaction responses between the processor tile to subsystems outside the tile (untile). Counting off-core response requires additional event qualification configuration facility in conjunction with IA32_PERFEVTSELx. Two off-core response MSRs are provided to use in conjunction with specific event codes that must be specified with IA32_PERFEVTSELx. Two cores do not share the off-core response MSRs. Knights Landing expands off-core response capability to match the processor untile changes.
- Average request latency measurement. The off-core response counting facility can be combined to use two performance counters to count the occurrences and weighted cycles of transaction requests. This facility is updated to match the processor untile changes.

20.4.1.1.1 Processor Event-Based Sampling

The processor supports processor event based sampling (PEBS). PEBS is supported using IA32_PMC0 (see also Section 18.4.9, “BTS and DS Save Area”).

PEBS uses a debug store mechanism to store a set of architectural state information for the processor. The information provides architectural state of the instruction executed after the instruction that caused the event (See Section 20.6.2.4).

The list of PEBS events supported in the processor is shown in the following table.

Table 20-56. PEBS Performance Events for the Knights Landing Microarchitecture

Event Name	Event Select	Sub-event	UMask	Data Linear Address Support
BR_INST_RETIRED	C4H	ALL_BRANCHES	00H	No
		JCC	7EH	No
		TAKEN_JCC	FEH	No
		CALL	F9H	No
		REL_CALL	FDH	No
		IND_CALL	FBH	No
		NON_RETURN_IND	EBH	No
		FAR_BRANCH	BFH	No
		RETURN	F7H	No
BR_MISP_RETIRED	C5H	ALL_BRANCHES	00H	No
		JCC	7EH	No
		TAKEN_JCC	FEH	No
		IND_CALL	FBH	No
		NON_RETURN_IND	EBH	No
		RETURN	F7H	No
MEM_UOPS_RETIRED	04H	L2_HIT_LOADS	02H	Yes
		L2_MISS_LOADS	04H	Yes
		DLTB_MISS_LOADS	08H	Yes
RECYCLEQ	03H	LD_BLOCK_ST_FORWARD	01H	Yes
		LD_SPLITS	08H	Yes

The PEBS record format 2 supported by processors based on the Knights Landing microarchitecture is shown in Table 20-57, and each field in the PEBS record is 64 bits long.

Table 20-57. PEBS Record Format for the Knights Landing Microarchitecture

Byte Offset	Field	Byte Offset	Field
00H	R/EFLAGS	60H	R10
08H	R/EIP	68H	R11
10H	R/EAX	70H	R12
18H	R/EBX	78H	R13
20H	R/ECX	80H	R14
28H	R/EDX	88H	R15
30H	R/ESI	90H	IA32_PERF_GLOBAL_STATUS
38H	R/EDI	98H	PSDLA
40H	R/EBP	A0H	Reserved
48H	R/ESP	A8H	Reserved
50H	R8	B0H	EventingRIP

Table 20-57. PEBS Record Format for the Knights Landing Microarchitecture (Contd.)

Byte Offset	Field	Byte Offset	Field
58H	R9	B8H	Reserved

20.4.1.1.2 Offcore Response Event

Event number 0B7H support offcore response monitoring using an associated configuration MSR, MSR_OFFCORE_RSP0 (address 1A6H) in conjunction with UMASK value 01H or MSR_OFFCORE_RSP1 (address 1A7H) in conjunction with UMASK value 02H. Table 20-58 lists the event code, mask value and additional off-core configuration MSR that must be programmed to count off-core response events using IA32_PMCx.

Table 20-58. OffCore Response Event Encoding

Counter	Event code	UMask	Required Off-core Response MSR
PMC0-1	B7H	01H	MSR_OFFCORE_RSP0 (address 1A6H)
PMC0-1	B7H	02H	MSR_OFFCORE_RSP1 (address 1A7H)

Some of the MSR_OFFCORE_RESP [0,1] register bits are not valid in this processor and their use is reserved. The layout of MSR_OFFCORE_RSP0 and MSR_OFFCORE_RSP1 registers are defined in Table 20-59. Bits 15:0 specifies the request type of a transaction request to the uncore. Bits 30:16 specifies supplier information, bits 37:31 specifies snoop response information.

Additionally, MSR_OFFCORE_RSP0 provides bit 38 to enable measurement of average latency of specific type of offcore transaction requests using two programmable counter simultaneously, see Section 20.5.2.3 for details.

Table 20-59. Bit fields of the MSR_OFFCORE_RESP [0, 1] Registers

Main	Sub-field	Bit	Name	Description
Request Type		0	DEMAND_DATA_RD	Demand cacheable data and L1 prefetch data reads.
		1	DEMAND_RFO	Demand cacheable data writes.
		2	DEMAND_CODE_RD	Demand code reads and prefetch code reads.
		3	Reserved	Reserved.
		4	Reserved	Reserved.
		5	PF_L2_RFO	L2 data RFO prefetches (includes PREFETCHW instruction).
		6	PF_L2_CODE_RD	L2 code HW prefetches.
		7	PARTIAL_READS	Partial reads (UC or WC).
		8	PARTIAL_WRITES	Partial writes (UC or WT or WP). Valid only for OFFCORE_RESP_1 event. Should only be used on PMC1. This bit is reserved for OFFCORE_RESP_0 event.
		9	UC_CODE_READS	UC code reads.
		10	BUS_LOCKS	Bus locks and split lock requests.
		11	FULL_STREAMING_STORES	Full streaming stores (WC). Valid only for OFFCORE_RESP_1 event. Should only be used on PMC1. This bit is reserved for OFFCORE_RESP_0 event.
		12	SW_PREFETCH	Software prefetches.
		13	PF_L1_DATA_RD	L1 data HW prefetches.
		14	PARTIAL_STREAMING_STORES	Partial streaming stores (WC). Valid only for OFFCORE_RESP_1 event. Should only be used on PMC1. This bit is reserved for OFFCORE_RESP_0 event.
		15	ANY_REQUEST	Account for any requests.

Table 20-59. Bit fields of the MSR_OFFCORE_RESP [0, 1] Registers (Contd.)

Main	Sub-field	Bit	Name	Description
Response Type	Any	16	ANY_RESPONSE	Account for any response.
	Data Supply from Untile	17	NO_SUPP	No Supplier Details.
		18	Reserved	Reserved.
		19	L2_HIT_OTHER_TILE_NEAR	Other tile L2 hit E Near.
		20	Reserved	Reserved.
		21	MCDRAM_NEAR	MCDRAM Local.
		22	MCDRAM_FAR_OR_L2_HIT_OTHER_TILE_FAR	MCDRAM Far or Other tile L2 hit far.
		23	DRAM_NEAR	DRAM Local.
		24	DRAM_FAR	DRAM Far.
	Data Supply from within same tile	25	L2_HITM_THIS_TILE	M-state.
		26	L2_HITE_THIS_TILE	E-state.
		27	L2_HITS_THIS_TILE	S-state.
		28	L2_HITF_THIS_TILE	F-state.
		29	Reserved	Reserved.
		30	Reserved	Reserved.
	Snoop Info; Only Valid in case of Data Supply from Untile	31	SNOOP_NONE	None of the cores were snooped.
		32	NO_SNOOP_NEEDED	No snoop was needed to satisfy the request.
		33	Reserved	Reserved.
		34	Reserved	Reserved.
		35	HIT_OTHER_TILE_FWD	Snoop request hit in the other tile with data forwarded.
		36	HITM_OTHER_TILE	A snoop was needed and it HitM-ed in other core's L1 cache. HitM denotes a cache-line was in modified state before effect as a result of snoop.
		37	NON_DRAM	Target was non-DRAM system address. This includes MMIO transactions.
Outstanding requests	Weighted cycles	38	OUTSTANDING (Valid only for MSR_OFFCORE_RESP0. Should only be used on PMC0. This bit is reserved for MSR_OFFCORE_RESP1).	If set, counts total number of weighted cycles of any outstanding offcore requests with data response. Valid only for OFFCORE_RESP_0 event. Should only be used on PMC0. This bit is reserved for OFFCORE_RESP_1 event.

20.4.1.1.3 Average Offcore Request Latency Measurement

Measurement of average latency of offcore transaction requests can be enabled using MSR_OFFCORE_RSP0.[bit 38] with the choice of request type specified in MSR_OFFCORE_RSP0.[bit 15:0].

Refer to Section 20.5.2.3, "Average Offcore Request Latency Measurement," for typical usage. Note that MSR_OFFCORE_RESPx registers are not shared between cores in Knights Landing. This allows one core to measure average latency while other core is measuring different offcore response events.

20.5 PERFORMANCE MONITORING (INTEL ATOM® PROCESSORS)

20.5.1 Performance Monitoring (45 nm and 32 nm Intel Atom® Processors)

45 nm and 32 nm Intel Atom processors report architectural performance monitoring versionID = 3 (supporting the aggregate capabilities of versionID 1, 2, and 3; see Section 20.2.3) and a host of non-architectural monitoring capabilities. These 45 nm and 32 nm Intel Atom processors provide two general-purpose performance counters (IA32_PMC0, IA32_PMC1) and three fixed-function performance counters (IA32_FIXED_CTR0, IA32_FIXED_CTR1, IA32_FIXED_CTR2).

NOTE

The number of counters available to software may vary from the number of physical counters present on the hardware, because an agent running at a higher privilege level (e.g., a VMM) may not expose all counters. CPUID.0AH:EAX[15:8] reports the MSRs available to software; see Section 20.2.1.

Non-architectural performance monitoring in Intel Atom processor family uses the IA32_PERFEVTSELx MSR to configure a set of non-architecture performance monitoring events to be counted by the corresponding general-purpose performance counter. The list of non-architectural performance monitoring events can be found at: https://perfmon-events.intel.com/.

Architectural and non-architectural performance monitoring events in 45 nm and 32 nm Intel Atom processors support thread qualification using bit 21 (AnyThread) of IA32_PERFEVTSELx MSR, i.e., if IA32_PERFEVTSELx.AnyThread =1, event counts include monitored conditions due to either logical processors in the same processor core.

The bit fields within each IA32_PERFEVTSELx MSR are defined in Figure 20-6 and described in Section 20.2.1.1 and Section 20.2.3.

Valid event mask (Umask) bits can be found at: https://perfmon-events.intel.com/. The UMASK field may contain sub-fields that provide the same qualifying actions like those listed in Table 20-77, Table 20-78, Table 20-79, and Table 20-80. One or more of these sub-fields may apply to specific events on an event-by-event basis. Precise Event Based Monitoring is supported using IA32_PMC0 (see also Section 18.4.9, “BTS and DS Save Area”).

20.5.2 Performance Monitoring for Silvermont Microarchitecture

Intel processors based on the Silvermont microarchitecture report architectural performance monitoring versionID = 3 (see Section 20.2.3) and a host of non-architectural monitoring capabilities. Intel processors based on the Silvermont microarchitecture provide two general-purpose performance counters (IA32_PMC0, IA32_PMC1) and three fixed-function performance counters (IA32_FIXED_CTR0, IA32_FIXED_CTR1, IA32_FIXED_CTR2). Intel Atom processors based on the Airmont microarchitecture support the same performance monitoring capabilities as those based on the Silvermont microarchitecture.

Non-architectural performance monitoring in the Silvermont microarchitecture uses the IA32_PERFEVTSELx MSR to configure a set of non-architecture performance monitoring events to be counted by the corresponding general-purpose performance counter. The list of non-architectural performance monitoring events can be found at: https://perfmon-events.intel.com/.

The bit fields (except bit 21) within each IA32_PERFEVTSELx MSR are defined in Figure 20-6 and described in Section 20.2.1.1 and Section 20.2.3. Architectural and non-architectural performance monitoring events in the Silvermont microarchitecture ignore the AnyThread qualification regardless of its setting in IA32_PERFEVTSELx MSR.

20.5.2.1 Enhancements of Performance Monitoring in the Processor Core

The notable enhancements in the monitoring of performance events in the processor core include:

- The width of counter reported by CPUID.0AH:EAX[23:16] is 40 bits.

- Off-core response counting facility. This facility in the processor core allows software to count certain transaction responses between the processor core to sub-systems outside the processor core (uncore). Counting off-core response requires additional event qualification configuration facility in conjunction with IA32_PERFEVTSELx. Two off-core response MSRs are provided to use in conjunction with specific event codes that must be specified with IA32_PERFEVTSELx.
- Average request latency measurement. The off-core response counting facility can be combined to use two performance counters to count the occurrences and weighted cycles of transaction requests.

20.5.2.1.1 Processor Event Based Sampling (PEBS)

In the Silvermont microarchitecture, the PEBS facility can be used with precise events. PEBS is supported using IA32_PMC0 (see also Section 18.4.9).

PEBS uses a debug store mechanism to store a set of architectural state information for the processor. The information provides architectural state of the instruction executed after the instruction that caused the event (See Section 20.6.2.4).

The list of precise events supported in the Silvermont microarchitecture is shown in Table 20-60.

Table 20-60. PEBS Performance Events for the Silvermont Microarchitecture

Event Name	Event Select	Sub-event	UMask
BR_INST_RETIRED	C4H	ALL_BRANCHES	00H
		JCC	7EH
		TAKEN_JCC	FEH
		CALL	F9H
		REL_CALL	FDH
		IND_CALL	FBH
		NON_RETURN_IND	EBH
		FAR_BRANCH	BFH
		RETURN	F7H
BR_MISP_RETIRED	C5H	ALL_BRANCHES	00H
		JCC	7EH
		TAKEN_JCC	FEH
		IND_CALL	FBH
		NON_RETURN_IND	EBH
		RETURN	F7H
MEM_UOPS_RETIRED	04H	L2_HIT_LOADS	02H
		L2_MISS_LOADS	04H
		DLTB_MISS_LOADS	08H
		HITM	20H
REHABQ	03H	LD_BLOCK_ST_FORWARD	01H
		LD_SPLITS	08H

PEBS Record Format The PEBS record format supported by processors based on the Intel Silvermont microarchitecture is shown in Table 20-61, and each field in the PEBS record is 64 bits long.

Table 20-61. PEBS Record Format for the Silvermont Microarchitecture

Byte Offset	Field	Byte Offset	Field
00H	R/EFLAGS	60H	R10
08H	R/EIP	68H	R11
10H	R/EAX	70H	R12
18H	R/EBX	78H	R13
20H	R/ECX	80H	R14
28H	R/EDX	88H	R15
30H	R/ESI	90H	IA32_PERF_GLOBAL_STATUS
38H	R/EDI	98H	Reserved
40H	R/EBP	A0H	Reserved
48H	R/ESP	A8H	Reserved
50H	R8	B0H	EventingRIP
58H	R9	B8H	Reserved

20.5.2.2 Offcore Response Event

Event number 0B7H support offcore response monitoring using an associated configuration MSR, MSR_OFFCORE_RSP0 (address 1A6H) in conjunction with UMASK value 01H or MSR_OFFCORE_RSP1 (address 1A7H) in conjunction with UMASK value 02H. Table 20-62 lists the event code, mask value and additional off-core configuration MSR that must be programmed to count off-core response events using IA32_PMCx.

In the Silvermont microarchitecture, each MSR_OFFCORE_RSPx is shared by two processor cores.

Table 20-62. OffCore Response Event Encoding

Counter	Event code	UMask	Required Off-core Response MSR
PMC0-1	B7H	01H	MSR_OFFCORE_RSP0 (address 1A6H)
PMC0-1	B7H	02H	MSR_OFFCORE_RSP1 (address 1A7H)

The layout of MSR_OFFCORE_RSP0 and MSR_OFFCORE_RSP1 are shown in Figure 20-40 and Figure 20-41. Bits 15:0 specifies the request type of a transaction request to the uncore. Bits 30:16 specifies supplier information, bits 37:31 specifies snoop response information.

Additionally, MSR_OFFCORE_RSP0 provides bit 38 to enable measurement of average latency of specific type of offcore transaction requests using two programmable counter simultaneously, see Section 20.5.2.3 for details.

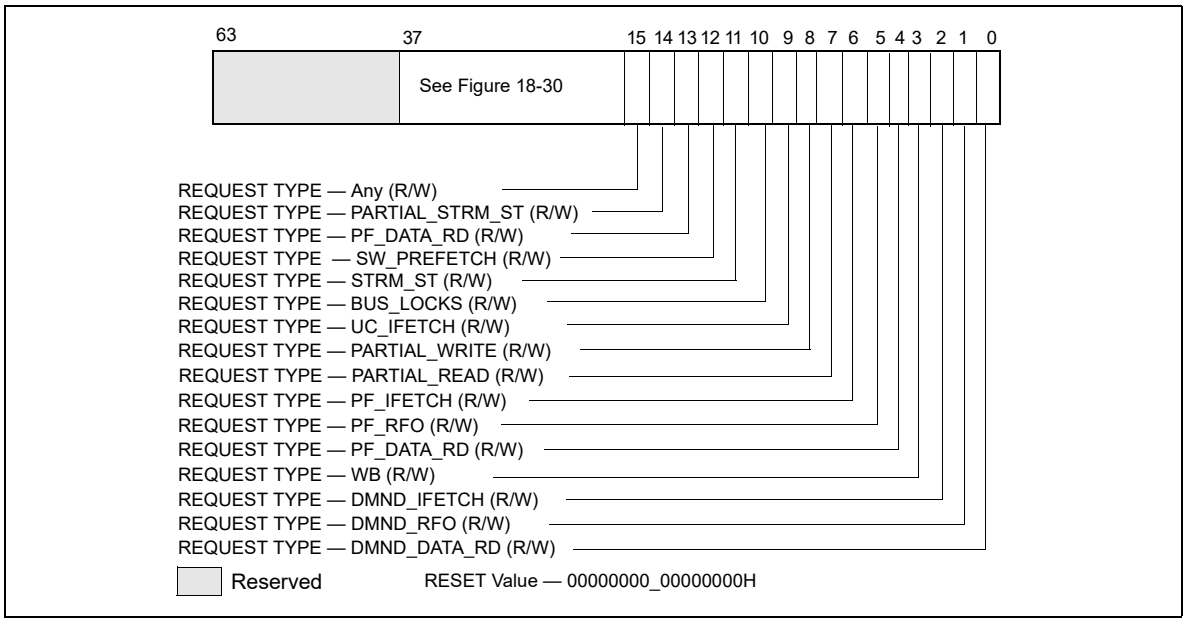

Figure 20-40. Request_Type Fields for MSR_OFFCORE_RSPx

Table 20-63. MSR_OFFCORE_RSPx Request_Type Field Definition

Bit Name	Offset	Description
DMND_DATA_RD	0	Counts the number of demand and DCU prefetch data reads of full and partial cachelines as well as demand data page table entry cacheline reads. Does not count L2 data read prefetches or instruction fetches.
DMND_RFO	1	Counts the number of demand and DCU prefetch reads for ownership (RFO) requests generated by a write to data cacheline. Does not count L2 RFO prefetches.
DMND_IFETCH	2	Counts the number of demand instruction cacheline reads and L1 instruction cacheline prefetches.
WB	3	Counts the number of writeback (modified to exclusive) transactions.
PF_DATA_RD	4	Counts the number of data cacheline reads generated by L2 prefetchers.
PF_RFO	5	Counts the number of RFO requests generated by L2 prefetchers.
PF_IFETCH	6	Counts the number of code reads generated by L2 prefetchers.
PARTIAL_READ	7	Counts the number of demand reads of partial cache lines (including UC and WC).
PARTIAL_WRITE	8	Counts the number of demand RFO requests to write to partial cache lines (includes UC, WT, and WP).
UC_IFETCH	9	Counts the number of UC instruction fetches.
BUS_LOCKS	10	Bus lock and split lock requests.
STRM_ST	11	Streaming store requests.
SW_PREFETCH	12	Counts software prefetch requests.
PF_DATA_RD	13	Counts DCU hardware prefetcher data read requests.
PARTIAL_STRM_ST	14	Streaming store requests.
ANY	15	Any request that crosses IDI, including I/O.

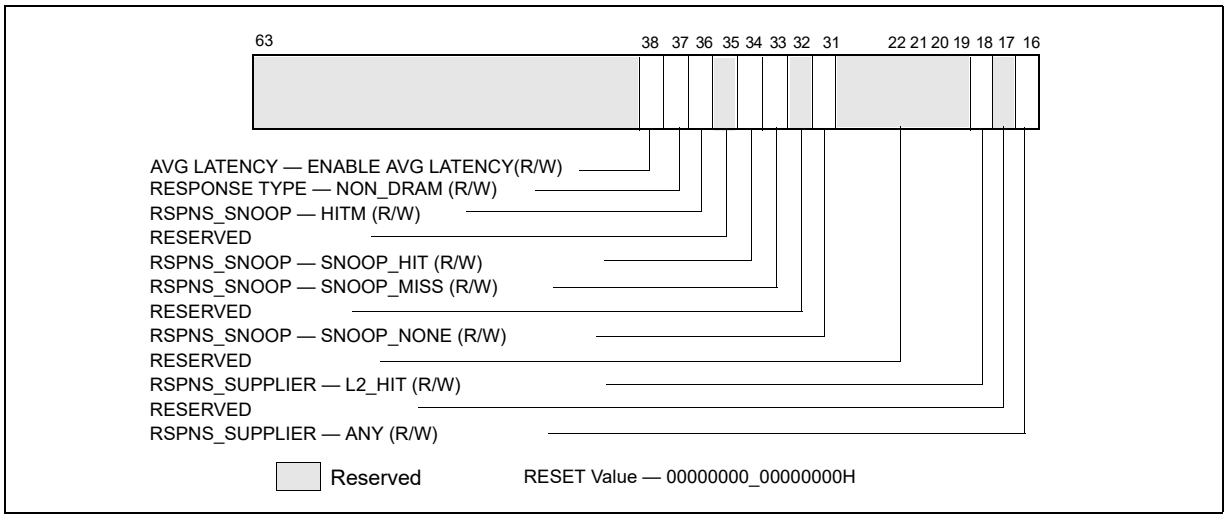

Figure 20-41. Response_Supplier and Snoop Info Fields for MSR_OFFCORE_RSPx

To properly program this extra register, software must set at least one request type bit (Table 20-63) and a valid response type pattern (Table 20-64, Table 20-65). Otherwise, the event count reported will be zero. It is permissible and useful to set multiple request and response type bits in order to obtain various classes of off-core response events. Although MSR_OFFCORE_RSPx allow an agent software to program numerous combinations that meet the above guideline, not all combinations produce meaningful data.

Table 20-64. MSR_OFFCORE_RSP_x Response Supplier Info Field Definition

Subtype	Bit Name	Offset	Description
Common	ANY_RESPONSE	16	Catch all value for any response types.
Supplier Info	Reserved	17	Reserved
	L2_HIT	18	Cache reference hit L2 in either M/E/S states.
	Reserved	30:19	Reserved

To specify a complete offcore response filter, software must properly program bits in the request and response type fields. A valid request type must have at least one bit set in the non-reserved bits of 15:0. A valid response type must be a non-zero value of the following expression:

ANY | [('OR' of Supplier Info Bits) & ('OR' of Snoop Info Bits)]

If "ANY" bit is set, the supplier and snoop info bits are ignored.

Table 20-65. MSR_OFFCORE_RSPx Snoop Info Field Definition

Subtype	Bit Name	Offset	Description
Snoop Info	SNP_NONE	31	No details on snoop-related information.
	Reserved	32	Reserved
	SNOOP_MISS	33	Counts the number of snoop misses when L2 misses.
	SNOOP_HIT	34	Counts the number of snoops hit in the other module where no modified copies were found.
	Reserved	35	Reserved

Table 20-65. MSR_OFFCORE_RSPx Snoop Info Field Definition (Contd.)

Subtype	Bit Name	Offset	Description
	HITM	36	Counts the number of snoops hit in the other module where modified copies were found in other core's L1 cache.
	NON_DRAM	37	Target was non-DRAM system address. This includes MMIO transactions.
	AVG_LATENCY	38	Enable average latency measurement by counting weighted cycles of outstanding offcore requests of the request type specified in bits 15:0 and any response (bits 37:16 cleared to 0). This bit is available in MSR_OFFCORE_RESP0. The weighted cycles is accumulated in the specified programmable counter IA32_PMCx and the occurrence of specified requests are counted in the other programmable counter.

20.5.2.3 Average Offcore Request Latency Measurement

Average latency for offcore transactions can be determined by using both MSR_OFFCORE_RSP registers. Using two performance monitoring counters, program the two OFFCORE_RESPONSE event encodings into the corresponding IA32_PERFEVTSELx MSRs. Count the weighted cycles via MSR_OFFCORE_RSP0 by programming a request type in MSR_OFFCORE_RSP0.[15:0] and setting MSR_OFFCORE_RSP0.OUTSTANDING[38] to 1, white setting the remaining bits to 0. Count the number of requests via MSR_OFFCORE_RSP1 by programming the same request type from MSR_OFFCORE_RSP0 into MSR_OFFCORE_RSP1[bit 15:0], and setting MSR_OFFCORE_RSP1.ANY_RESPONSE[16] = 1, while setting the remaining bits to 0. The average latency can be obtained by dividing the value of the IA32_PMCx register that counted weight cycles by the register that counted requests.

20.5.3 Performance Monitoring for Goldmont Microarchitecture

Intel Atom processors based on the Goldmont microarchitecture report architectural performance monitoring versionID = 4 (see Section 20.2.4) and support non-architectural monitoring capabilities described in this section.

Architectural performance monitoring version 4 capabilities are described in Section 20.2.4.

The bit fields (except bit 21) within each IA32_PERFEVTSELx MSR are defined in Figure 20-6 and described in Section 20.2.1.1 and Section 20.2.3. The Goldmont microarchitecture does not support Hyper-Threading and thus architectural and non-architectural performance monitoring events ignore the AnyThread qualification regardless of its setting in the IA32_PERFEVTSELx MSR. However, Goldmont does not set the AnyThread deprecation bit (CPUID.0AH:EDX[15]).

The core PMU's capability is similar to that of the Silvermont microarchitecture described in Section 20.5.2 , with some differences and enhancements summarized in Table 20-66.

Table 20-66. Core PMU Comparison Between the Goldmont and Silvermont Microarchitectures

Box	Goldmont Microarchitecture	Silvermont Microarchitecture	Comment
# of Fixed counters per core	3	3	Use CPUID to determine # of counters. See Section 20.2.1.
# of general-purpose counters per core	4	2	Use CPUID to determine # of counters. See Section 20.2.1.
Counter width (R,W)	R:48, W: 32/48	R:40, W:32	See Section 20.2.2.
Architectural Performance Monitoring version ID	4	3	Use CPUID to determine # of counters. See Section 20.2.1.

Table 20-66. Core PMU Comparison Between the Goldmont and Silvermont Microarchitectures

Box	Goldmont Microarchitecture	Silvermont Microarchitecture	Comment
PMI Overhead Mitigation	▪ Freeze_Perfmon_on_PMI with streamlined semantics. ▪ Freeze_LBR_on_PMI with streamlined semantics for branch profiling.	▪ Freeze_Perfmon_on_PMI with legacy semantics. ▪ Freeze_LBR_on_PMI with legacy semantics for branch profiling.	See Section 18.4.7. Legacy semantics not supported with version 4 or higher.
Counter and Buffer Overflow Status Management	▪ Query via IA32_PERF_GLOBAL_STATUS ▪ Reset via IA32_PERF_GLOBAL_STATUS_RESET ▪ Set via IA32_PERF_GLOBAL_STATUS_SET	▪ Query via IA32_PERF_GLOBAL_STATUS ▪ Reset via IA32_PERF_GLOBAL_OVF_CTRL	See Section 20.2.4.
IA32_PERF_GLOBAL_STATUS Indicators of Overflow/Overhead/Interference	▪ Individual counter overflow ▪ PEBS buffer overflow ▪ ToPA buffer overflow ▪ CTR_Frz, LBR_Frz	▪ Individual counter overflow ▪ PEBS buffer overflow	See Section 20.2.4.
Enable control in IA32_PERF_GLOBAL_STATUS	▪ CTR_Frz, ▪ LBR_Frz	No	See Section 20.2.4.1.
Perfmon Counter In-Use Indicator	Query IA32_PERF_GLOBAL_INUSE	No	See Section 20.2.4.3.
Processor Event Based Sampling (PEBS) Events	General-Purpose Counter 0 only. Supports all events (precise and non-precise). Precise events are listed in Table 20-67.	See Section 20.5.2.1.1. General-Purpose Counter 0 only. Only supports precise events (see Table 20-60).	IA32_PMC0 only.
PEBS record format encoding	0011b	0010b	
Reduce skid PEBS	IA32_PMC0 only	No	
Data Address Profiling	Yes	No	
PEBS record layout	Table 20-68; enhanced fields at offsets 90H- 98H; and TSC record field at C0H.	Table 20-61.	
PEBS EventingIP	Yes	Yes	
Off-core Response Event	MSR 1A6H and 1A7H, each core has its own register.	MSR 1A6H and 1A7H, shared by a pair of cores.	Nehalem supports 1A6H only.

20.5.3.1 Processor Event Based Sampling (PEBS)

Processor event based sampling (PEBS) on the Goldmont microarchitecture is enhanced over prior generations with respect to sampling support of precise events and non-precise events. In the Goldmont microarchitecture, PEBS is supported using IA32_PMC0 for all events (see Section 18.4.9).

PEBS uses a debug store mechanism to store a set of architectural state information for the processor at the time the sample was generated.

Precise events work the same way on Goldmont microarchitecture as on the Silvermont microarchitecture. The record will be generated after an instruction that causes the event when the counter is already overflowed and will capture the architectural state at this point (see Section 20.6.2.4 and Section 18.4.9). The eventingIP in the record will indicate the instruction that caused the event. The list of precise events supported in the Goldmont microarchitecture is shown in Table 20-67.

In the Goldmont microarchitecture, the PEBS facility also supports the use of non-precise events to record processor state information into PEBS records with the same format as with precise events.

However, a non-precise event may not be attributable to a particular retired instruction or the time of instruction execution. When the counter overflows, a PEBS record will be generated at the next opportunity. Consider the event ICACHE.HIT. When the counter overflows, the processor is fetching future instructions. The PEBS record will be generated at the next opportunity and capture the state at the processor's current retirement point. It is likely that the instruction fetch that caused the event to increment was beyond that current retirement point. Other examples of non-precise events are CPU_CLK_UNHALTED.CORE_P and HARDWARE_INTERRUPTS.RECEIVED. CPU_CLK_UNHALTED.CORE_P will increment each cycle that the processor is awake. When the counter over-flows, there may be many instructions in various stages of execution. Additionally, zero, one or multiple instructions may be retired the cycle that the counter overflows. HARDWARE_INTERRUPTS.RECEIVED increments independent of any instructions being executed. For all non-precise events, the PEBS record will be generated at the next opportunity, after the counter has overflowed. The PEBS facility thus allows for identification of the instructions which were executing when the event overflowed.

After generating a record for a non-precise event, the PEBS facility reloads the counter and resumes execution, just as is done for precise events. Unlike interrupt-based sampling, which requires an interrupt service routine to collect the sample and reload the counter, the PEBS facility can collect samples even when interrupts are masked and without using NMI. Since a PEBS record is generated immediately when a counter for a non-precise event is enabled, it may also be generated after an overflow is set by an MSR write to IA32_PERF_GLOBAL_STATUS_SET.

Table 20-67. Precise Events Supported by the Goldmont Microarchitecture

Event Name	Event Select	Sub-event	UMask
LD_BLOCKS	03H	DATA_UNKNOWN	01H
		STORE_FORWARD	02H
		4K_ALIAS	04H
		UTLB_MISS	08H
		ALL_BLOCK	10H
MISALIGN_MEM_REF	13H	LOAD_PAGE_SPLIT	02H
		STORE_PAGE_SPLIT	04H
INST_RETIRED	C0H	ANY	00H
UOPS_RETITRED	C2H	ANY	00H
		LD_SPLITSMS	01H
BR_INST_RETIRED	C4H	ALL_BRANCHES	00H
		JCC	7EH
		TAKEN_JCC	FEH
		CALL	F9H
		REL_CALL	FDH
		IND_CALL	FBH
		NON_RETURN_IND	EBH
		FAR_BRANCH	BFH
		RETURN	F7H
BR_MISP_RETIRED	C5H	ALL_BRANCHES	00H
		JCC	7EH
		TAKEN_JCC	FEH
		IND_CALL	FBH
		NON_RETURN_IND	EBH
		RETURN	F7H

Table 20-67. Precise Events Supported by the Goldmont Microarchitecture (Contd.)

Event Name	Event Select	Sub-event	UMask
MEM_UOPS_RETIRED	D0H	ALL_LOADS	81H
		ALL_STORES	82H
		ALL	83H
		DLTB_MISS_LOADS	11H
		DLTB_MISS_STORES	12H
		DLTB_MISS	13H
MEM_LOAD_UOPS_RETIRED	D1H	L1_HIT	01H
		L2_HIT	02H
		L1_MISS	08H
		L2_MISS	10H
		HITM	20H
		WCB_HIT	40H
		DRAM_HIT	80H

The PEBS record format supported by processors based on the Goldmont microarchitecture is shown in Table 20-68, and each field in the PEBS record is 64 bits long.

Table 20-68. PEBS Record Format for the Goldmont Microarchitecture

Byte Offset	Field	Byte Offset	Field
00H	R/EFLAGS	68H	R11
08H	R/EIP	70H	R12
10H	R/EAX	78H	R13
18H	R/EBX	80H	R14
20H	R/ECX	88H	R15
28H	R/EDX	90H	Applicable Counters
30H	R/ESI	98H	Data Linear Address
38H	R/EDI	A0H	Reserved
40H	R/EBP	A8H	Reserved
48H	R/ESP	B0H	EventingRIP
50H	R8	B8H	Reserved
58H	R9	C0H	TSC
60H	R10		

On Goldmont microarchitecture, all 64 bits of architectural registers are written into the PEBS record regardless of processor mode.

With PEBS record format encoding 0011b, offset 90H reports the "Applicable Counter" field, which indicates which counters actually requested generating a PEBS record. This allows software to correlate the PEBS record entry properly with the instruction that caused the event even when multiple counters are configured to record PEBS records and multiple bits are set in the field. Additionally, offset C0H captures a snapshot of the TSC that provides a time line annotation for each PEBS record entry.

20.5.3.1.1 PEBS Data Linear Address Profiling

Goldmont supports the Data Linear Address field introduced in Haswell. It does not support the Data Source Encoding or Latency Value fields that are also part of Data Address Profiling; those fields are present in the record but are reserved.

For Goldmont microarchitecture, the Data Linear Address field will record the linear address of memory accesses in the previous instruction (e.g., the one that triggered a precise event that caused the PEBS record to be generated). Goldmont microarchitecture may record a Data Linear Address for the instruction that caused the event even for events not related to memory accesses. This may differ from other microarchitectures.

20.5.3.1.2 Reduced Skid PEBS

Processors based on Goldmont Plus microarchitecture support the Reduced Skid PEBS feature described in Section 20.9.4 on the IA32_PMC0 counter. Although Extended PEBS adds support for generating PEBS records for precise events on additional general-purpose and fixed-function performance counters, those counters do not support the Reduced Skid PEBS feature.

20.5.3.1.3 Enhancements to IA32_PERF_GLOBAL_STATUS.OvfDSBuffer[62]

In addition to IA32_PERF_GLOBAL_STATUS.OvfDSBuffer[62] being set when PEBS_Index reaches the PEBS_Interrupt_Theshold, the bit is also set when PEBS_Index is out of bounds. That is, the bit will be set when PEBS_Index < PEBS_Buffer_Base or PEBS_Index > PEBS_Absolute_Maximum. Note that when an out of bound condition is encountered, the overflow bits in IA32_PERF_GLOBAL_STATUS will be cleared according to Applicable Counters, however the IA32_PMCx values will not be reloaded with the Reset values stored in the DS_AREA.

20.5.3.2 Offcore Response Event

Event number 0B7H support offcore response monitoring using an associated configuration MSR, MSR_OFFCORE_RSP0 (address 1A6H) in conjunction with UMASK value 01H or MSR_OFFCORE_RSP1 (address 1A7H) in conjunction with UMASK value 02H. Table 20-62 lists the event code, mask value and additional off-core configuration MSR that must be programmed to count off-core response events using IA32_PMCx.

The Goldmont microarchitecture provides unique pairs of MSR_OFFCORE_RSPx registers per core.

The layout of MSR_OFFCORE_RSP0 and MSR_OFFCORE_RSP1 are organized as follows:

- Bits 15:0 specifies the request type of a transaction request to the uncore. This is described in Table 20-69.
- Bits 30:16 specifies common supplier information or an L2 Hit, and is described in Table 20-64.
- If L2 misses, then Bits 37:31 can be used to specify snoop response information and is described in Table 20-70.
- For outstanding requests, bit 38 can enable measurement of average latency of specific type of offcore transaction requests using two programmable counter simultaneously; see Section 20.5.2.3 for details.

Table 20-69. MSR_OFFCORE_RSPx Request_Type Field Definition

Bit Name	Offset	Description
DEMAND_DATA_RD	0	Counts cacheline read requests due to demand reads (excludes prefetches).
DEMAND_RFO	1	Counts cacheline read for ownership (RFO) requests due to demand writes (excludes prefetches).
DEMAND_CODE_RD	2	Counts demand instruction cacheline and I-side prefetch requests that miss the instruction cache.
COREWB	3	Counts writeback transactions caused by L1 or L2 cache evictions.
PF_L2_DATA_RD	4	Counts data cacheline reads generated by hardware L2 cache prefetcher.
PF_L2_RFO	5	Counts reads for ownership (RFO) requests generated by L2 prefetcher.
Reserved	6	Reserved.

Table 20-69. MSR_OFFCORE_RSPx Request_Type Field Definition (Contd.)

Bit Name	Offset	Description
PARTIAL_READS	7	Counts demand data partial reads, including data in uncacheable (UC) or uncacheable (WC) write combining memory types.
PARTIAL_WRITES	8	Counts partial writes, including uncacheable (UC), write through (WT) and write protected (WP) memory type writes.
UC_CODE_READS	9	Counts code reads in uncacheable (UC) memory region.
BUS_LOCKS	10	Counts bus lock and split lock requests.
FULL_STREAMING_STORES	11	Counts full cacheline writes due to streaming stores.
SW_PREFETCH	12	Counts cacheline requests due to software prefetch instructions.
PF_L1_DATA_RD	13	Counts data cacheline reads generated by hardware L1 data cache prefetcher.
PARTIAL_STREAMING_STORES	14	Counts partial cacheline writes due to streaming stores.
ANY_REQUEST	15	Counts requests to the uncore subsystem.

To properly program this extra register, software must set at least one request type bit (Table 20-63) and a valid response type pattern (either Table 20-64 or Table 20-70). Otherwise, the event count reported will be zero. It is permissible and useful to set multiple request and response type bits in order to obtain various classes of off-core response events. Although MSR_OFFCORE_RSPx allow an agent software to program numerous combinations that meet the above guideline, not all combinations produce meaningful data.

Table 20-70. MSR_OFFCORE_RSPx For L2 Miss and Outstanding Requests

Subtype	Bit Name	Offset	Description
L2_MISS (Snoop Info)	Reserved	32:31	Reserved
	L2_MISS.SNOOP_MISS_OR_NO_SNOOP_NEEDED	33	A true miss to this module, for which a snoop request missed the other module or no snoop was performed/needed.
	L2_MISS.HIT_OTHER_CORE_NO_FWD	34	A snoop hit in the other processor module, but no data forwarding is required.
	Reserved	35	Reserved
	L2_MISS.HITM_OTHER_CORE	36	Counts the number of snoops hit in the other module or other core's L1 where modified copies were found.
	L2_MISS.NON_DRAM	37	Target was a non-DRAM system address. This includes MMIO transactions.
Outstanding requests[1]	OUTSTANDING	38	Counts weighted cycles of outstanding offcore requests of the request type specified in bits 15:0, from the time the XQ receives the request and any response is received. Bits 37:16 must be set to 0. This bit is only available in MSR_OFFCORE_RESP0.

NOTES:

1. See Section 20.5.2.3, "Average Offcore Request Latency Measurement" for details on how to use this bit to extract average latency.

To specify a complete offcore response filter, software must properly program bits in the request and response type fields. A valid request type must have at least one bit set in the non-reserved bits of 15:0. A valid response type must be a non-zero value of the following expression:

Any_Response Bit | L2 Hit | 'OR' of Snoop Info Bits | Outstanding Bit

20.5.3.3 Average Offcore Request Latency Measurement

In Goldmont microarchitecture, measurement of average latency of offcore transaction requests is the same as described in Section 20.5.2.3.

20.5.4 Performance Monitoring for Goldmont Plus Microarchitecture

Intel Atom processors based on the Goldmont Plus microarchitecture report architectural performance monitoring versionID = 4 and support non-architectural monitoring capabilities described in this section.

Architectural performance monitoring version 4 capabilities are described in Section 20.2.4.

Goldmont Plus performance monitoring capabilities are similar to Goldmont capabilities. The differences are in specific events and in which counters support PEBS. Goldmont Plus introduces the ability for fixed performance monitoring counters to generate PEBS records.

Goldmont Plus will set the AnyThread deprecation CPUID bit (CPUID.0AH:EDX[15]) to indicate that the Any-Thread bits in IA32_PERFEVTSELx and IA32_FIXED_CTR_CTRL have no effect.

The core PMU's capability is similar to that of the Goldmont microarchitecture described in Section 20.6.3, with some differences and enhancements summarized in Table 20-71.

Table 20-71. Core PMU Comparison Between the Goldmont Plus and Goldmont Microarchitectures

Box	Goldmont Plus Microarchitecture	Goldmont Microarchitecture	Comment
# of Fixed counters per core	3	3	Use CPUID to determine # of counters. See Section 20.2.1.
# of general-purpose counters per core	4	4	Use CPUID to determine # of counters. See Section 20.2.1.
Counter width (R,W)	R:48, W: 32/48	R:48, W: 32/48	No change.
Architectural Performance Monitoring version ID	4	4	No change.
Processor Event Based Sampling (PEBS) Events	All General-Purpose and Fixed counters. Each General-Purpose counter supports all events (precise and non-precise).	General-Purpose Counter 0 only. Supports all events (precise and non-precise). Precise events are listed in Table 20-67.	Goldmont Plus supports PEBS on all counters.
PEBS record format encoding	0011b	0011b	No change.

20.5.4.1 Extended PEBS

The PEBS facility in Goldmont Plus microarchitecture provides a number of enhancements relative to PEBS in processors from previous generations. Enhancement of PEBS facility with the Extended PEBS feature are described in detail in section 18.9.

20.5.5 Performance Monitoring for Tremont Microarchitecture

Intel Atom processors based on the Tremont microarchitecture report architectural performance monitoring versionID = 5 and support non-architectural monitoring capabilities described in this section.

Architectural performance monitoring version 5 capabilities are described in Section 20.2.5.

Tremont performance monitoring capabilities are similar to Goldmont Plus capabilities, with the following extensions:

- Support for Adaptive PEBS.
- Support for PEBS output to Intel® Processor Trace.
- Precise Distribution support on Fixed Counter0.
- Compatibility enhancements to off-core response MSRs, MSR_OFFCORE_RSPx.

The differences and enhancements between Tremont microarchitecture and Goldmont Plus microarchitecture are summarized in Table 20-72.

Table 20-72. Core PMU Comparison Between the Tremont and Goldmont Plus Microarchitectures

Box	Tremont Microarchitecture	Goldmont Plus Microarchitecture	Comment
# of fixed counters per core	3	3	Use CPUID to determine # of counters. See Section 20.2.1.
# of general-purpose counters per core	4	4	Use CPUID to determine # of counters. See Section 20.2.1.
Counter width (R,W)	R:48, W: 32/48	R:48, W: 32/48	No change. See Section 20.2.2.
Architectural Performance Monitoring version ID	5	4	
PEBS record format encoding	0100b	0011b	See Section 20.6.2.4.2.
Reduce skid PEBS	IA32_PMC0 and IA32_FIXED_CTR0	IA32_PMC0 only	
Extended PEBS	Yes	Yes	See Section 20.5.4.1.
Adaptive PEBS	Yes	No	See Section 20.9.2.
PEBS output	DS Save Area or Intel® Processor Trace	DS Save Area only	See Section 20.5.5.2.1.
PEBS record layout	See Section 20.9.2.3 for output to DS, Section 20.5.5.2.2 for output to Intel PT.	Table 20-68; enhanced fields at offsets 90H- 98H; and TSC record field at C0H.	
Off-core Response Event	MSR 1A6H and 1A7H, each core has its own register, extended request and response types.	MSR 1A6H and 1A7H, each core has its own register.	

20.5.5.1 Adaptive PEBS

The PEBS record format and configuration interface has changed versus Goldmont Plus, as the Tremont microarchitecture includes support for the configurable Adaptive PEBS records; see Section 20.9.2.

20.5.5.2 PEBS output to Intel® Processor Trace

Intel Atom processors based on the Tremont microarchitecture introduce the following Precise Event-Based Sampling (PEBS) extensions:

- A mechanism to direct PEBS output into the Intel® Processor Trace (Intel® PT) output stream. In this scenario, the PEBS record is written in packetized form, in order to co-exist with other Intel PT trace data.
- New Performance Monitoring counter reload MSRs, which are used by PEBS in place of the counter reload values stored in the DS Management area when PEBS output is directed into the Intel PT output stream.

Processors that indicate support for Intel PT by setting CPUID.07H.0.EBX[25]=1, and set the new IA32_PERF_CAPABILITIES.PEBS_OUTPUT_PT_AVAIL[16] bit, support these extensions.

20.5.5.2.1 PEBS Configuration

PEBS output to Intel Processor Trace includes support for two new fields in IA32_PEBS_ENABLE.

Table 20-73. New Fields in IA32_PEBS_ENABLE

Field	Description
PMI_AFTER_EACH_RECORD[60]	Pend a PerfMon Interrupt (PMI) after each PEBS event.
PEBS_OUTPUT[62:61]	Specifies PEBS output destination. Encodings: 00B: DS Save Area. Matches legacy PEBS behavior, output location defined by IA32_DS_AREA. 01B: Intel PT trace output. 10B: Reserved. 11B: Reserved.

When PEBS_OUTPUT is set to 01B, the DS Management Area is not used and need not be configured. Instead, the output mechanism is configured through IA32_RTIT_CTL and other Intel PT MSRs, while counter reload values are configured in the MSR_RELOAD_PMCx MSRs. Details on configuring Intel PT can be found in Section 33.2.7.

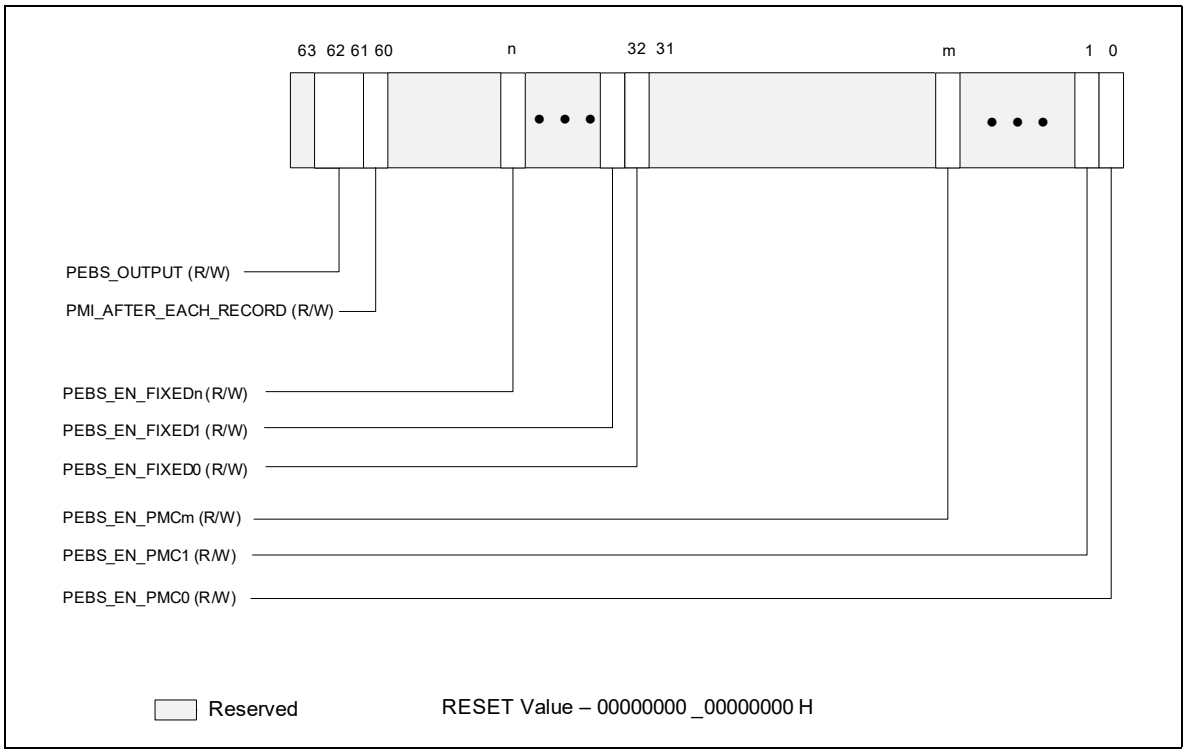

Figure 20-42. IA32_PEBS_ENABLE MSR with PEBS Output to Intel® Processor Trace

20.5.5.2.2 PEBS Record Format in Intel® Processor Trace

The format of the PEBS record changes when output to Intel PT, as the PEBS state is packetized. Each PEBS grouping is emitted as a Block Begin (BBP) and following Block Item (BIP) packets. A PEBS grouping ends when either a new PEBS grouping begins (indicated by a BBP packet) or a Block End (BEP) packet is encountered. See Section 33.4.1.1 for details of these Intel PT packets.

Because the packet headers describe the state held in the packet payload, PEBS state ordering is not fixed. PEBS state groupings may be emitted in any order, and the PEBS state elements within those groupings may be emitted in any order. Further, there is no packet that provides indication of "Record Format" or "Record Size".

If Intel PT tracing is not enabled (IA32_RTIT_STATUS.TriggerEn=0), any PEBS records triggered will be dropped. PEBS packets do not depend on ContextEn or FilterEn in IA32_RTIT_STATUS, any filtering of PEBS must be enabled from within the PerfMon configuration. Counter reload will occur in all scenarios where PEBS is triggered, regardless of TriggerEn.

The PEBS threshold mechanism for generating PerfMon Interrupts (PMIs) is not available in this mode. However, there exist other means to generate PMIs based on PEBS output. When the Intel PT ToPA output mechanism is chosen, a PMI can optionally be pended when a ToPA region is filled; see Section 33.2.7.2 for details. Further, software can opt to generate a PMI on each PEBS record by setting the new IA32_PEBS_ENABLE.PMI_AFTER_EACH_RECORD[60] bit.

The IA32_PERF_GLOBAL_STATUS.OvfDSBuffer bit will not be set in this mode.

20.5.5.2.3 PEBS Counter Reload

When PEBS output is directed into Intel PT (IA32_PEBS_ENABLE.PEBS_OUTPUT = 01B), new MSR_RELOAD_PMCx MSRs are used by the PEBS routine to reload PerfMon counters. The value from the associated reload MSR will be loaded to the appropriate counter on each PEBS event.

20.5.5.3 Precise Distribution Support on Fixed Counter 0

The Tremont microarchitecture supports the PDIR (Precise Distribution of Retired Instructions) facility, as described in Section 20.3.4.4.4, on Fixed Counter 0. Fixed Counter 0 counts the INST_RETIRED.ALL event. PEBS skid for Fixed Counter 0 will be precisely one instruction.

This is in addition to the reduced skid PEBS behavior on IA32_PMC0; see Section 20.5.3.1.2.

20.5.5.4 Compatibility Enhancements to Offcore Response MSRs

The Off-core Response facility is similar to that described in Section 20.5.3.2.

The layout of MSR_OFFCORE_RSP0 and MSR_OFFCORE_RSP1 are organized as shown below. RequestType bits are defined in Table 20-74, ResponseType bits in Table 20-75, and SnoopInfo bits in Table 20-76.

Table 20-74. MSR_OFFCORE_RSPx Request Type Definition

Bit Name	Offset	Description
DEMAND_DATA_RD	0	Counts demand data reads.
DEMAND_RFO	1	Counts all demand reads for ownership (RFO) requests and software based prefetches for exclusive ownership (prefetchw).
DEMAND_CODE_RD	2	Counts demand instruction fetches and L1 instruction cache prefetches.
COREWB_M	3	Counts modified write backs from L1 and L2.
HWPF_L2_DATA_RD	4	Counts prefetch (that bring data to L2) data reads.
HWPF_L2_RFO	5	Counts all prefetch (that bring data to L2) RFOs.
HWPF_L2_CODE_RD	6	Counts all prefetch (that bring data to L2 only) code reads.
Reserved	9:7	Reserved.
HWPF_L1D_AND_SWPF	10	Counts L1 data cache hardware prefetch requests, read for ownership prefetch requests and software prefetch requests (except prefetchw).
STREAMING_WR	11	Counts all streaming stores.
COREWB_NONM	12	Counts non-modified write backs from L2.
Reserved	14:13	Reserved.
OTHER	15	Counts miscellaneous requests, such as I/O accesses that have any response type.
UC_RD	44	Counts uncached memory reads (PRd, UCRdF).
UC_WR	45	Counts uncached memory writes (WiL).
PARTIAL_STREAMING_WR	46	Counts partial (less than 64 byte) streaming stores (WCiL).
FULL_STREAMING_WR	47	Counts full, 64 byte streaming stores (WCiLF).

Table 20-74. MSR_OFFCORE_RSPx Request Type Definition (Contd.)

Bit Name	Offset	Description
L1WB_M	48	Counts modified WriteBacks from L1 that miss the L2.
L2WB_M	49	Counts modified WriteBacks from L2.

Table 20-75. MSR_OFFCORE_RSPx Response Type Definition

Bit Name	Offset	Description
ANY_RESPONSE	16	Catch all value for any response types.
L3_HIT_M	18	LLC/L3 Hit - M-state.
L3_HIT_E	19	LLC/L3 Hit - E-state.
L3_HIT_S	20	LLC/L3 Hit - S-state.
L3_HIT_F	21	LLC/L3 Hit - I-state.
LOCAL_DRAM	26	LLC/L3 Miss, DRAM Hit.
OUTSTANDING	63	Average latency of outstanding requests with the other counter counting number of occurrences; can also can be used to count occupancy.

Table 20-76. MSR_OFFCORE_RSPx Snoop Info Definition

Bit Name	Offset	Description
SNOOP_NONE	31	None of the cores were snooped. ▪ LLC miss and Dram data returned directly to the core.
SNOOP_NOT_NEEDED	32	No snoop needed to satisfy the request. ▪ LLC hit and CV bit(s) (core valid) was not set. ▪ LLC miss and Dram data returned directly to the core.
SNOOP_MISS	33	A snoop was sent but missed. ▪ LLC hit and CV bit(s) was set but snoop missed (silent data drop in core), data returned from LLC. ▪ LLC miss and Dram data returned directly to the core.
SNOOP_HIT_NO_FWD	34	A snoop was sent but no data forward. ▪ LLC hit and CV bit(s) was set but no data forward from the core, data returned from LLC. ▪ LLC miss and Dram data returned directly to the core.
SNOOP_HIT_WITH_FWD	35	A snoop was sent and non-modified data was forward. ▪ LLC hit and CV bit(s) was set, non-modified data was forward from core.
SNOOP_HITM	36	A snoop was sent and modified data was forward. ▪ LLC hit E or M and the CV bit(s) was set, modified data was forward from core.
NON_DRAM_BIT	37	Target was non-DRAM system address, MMIO access. ▪ LLC miss and Non-Dram data returned.

The Off-core Response capability behaves as follows:

- To specify a complete offcore response filter, software must properly program at least one RequestType and one ResponseType. A valid request type must have at least one bit set in the non-reserved bits of 15:0 or 49:44. A valid response type must be a non-zero value of one the following expressions:
    - Read requests:

      Any_Response Bit | (‘OR’ of Supplier Info Bits) ‘AND’ (‘OR’ of Snoop Info Bits) | Outstanding Bit
    - Write requests:

      Any_Response Bit | (‘OR’ of Supplier Info Bits) | Outstanding Bit
- When the ANY_RESPONSE bit in the ResponseType is set, all other response type bits will be ignored.
- True Demand Cacheable Loads include neither L1 Prefetches nor Software Prefetches.
- Bits 15:0 and Bits 49:44 specifies the request type of a transaction request to the uncore. This is described in Table 20-74.
- Bits 30:16 specifies common supplier information.
- “Outstanding Requests” (bit 63) is only available on MSR_OFFCORE_RSP0; a #GP fault will occur if software attempts to write a 1 to this bit in MSR_OFFCORE_RSP1. It is mutually exclusive with any ResponseType. Software must guarantee that all other ResponseType bits are set to 0 when the “Outstanding Requests” bit is set.
- “Outstanding Requests” bit 63 can enable measurement of the average latency of a specific type of off-core transaction; two programmable counters must be used simultaneously and the RequestType programming for MSR_OFFCORE_RSP0 and MSR_OFFCORE_RSP1 must be the same when using this Average Latency feature. See Section 20.5.2.3 for further details.

20.6 PERFORMANCE MONITORING (LEGACY INTEL PROCESSORS)

20.6.1 Performance Monitoring (Intel® Core™ Solo and Intel® Core™ Duo Processors)

In Intel Core Solo and Intel Core Duo processors, non-architectural performance monitoring events are programmed using the same facilities (see Figure 20-1) used for architectural performance events.

Non-architectural performance events use event select values that are model-specific. Event mask (Umask) values are also specific to event logic units. Some microarchitectural conditions detectable by a Umask value may have specificity related to processor topology (see Section 9.6, “Detecting Hardware Multi-Threading Support and Topology,” in the *Intel® 64 and IA-32 Architectures Software Developer’s Manual, Volume 3A*). As a result, the unit mask field (for example, IA32_PERFEVTSELx[bits 15:8]) may contain sub-fields that specify topology information of processor cores.

The sub-field layout within the Umask field may support two-bit encoding that qualifies the relationship between a microarchitectural condition and the originating core. This data is shown in Table 20-77. The two-bit encoding for core-specificity is only supported for a subset of Umask values (see: https://perfmon-events.intel.com/) and for Intel Core Duo processors. Such events are referred to as core-specific events.

Table 20-77. Core Specificity Encoding within a Non-Architectural Umask

IA32_PERFEVTSELx MSRs	
Bit 15:14 Encoding	**Description**
11B	All cores
10B	Reserved
01B	This core
00B	Reserved

Some microarchitectural conditions allow detection specificity only at the boundary of physical processors. Some bus events belong to this category, providing specificity between the originating physical processor (a bus agent) versus other agents on the bus. Sub-field encoding for agent specificity is shown in Table 20-78.

Table 20-78. Agent Specificity Encoding within a Non-Architectural Umask

IA32_PERFEVTSELx MSRs	
Bit 13 Encoding	**Description**
0	This agent
1	Include all agents

Some microarchitectural conditions are detectable only from the originating core. In such cases, unit mask does not support core-specificity or agent-specificity encodings. These are referred to as core-only conditions.

Some microarchitectural conditions allow detection specificity that includes or excludes the action of hardware prefetches. A two-bit encoding may be supported to qualify hardware prefetch actions. Typically, this applies only to some L2 or bus events. The sub-field encoding for hardware prefetch qualification is shown in Table 20-79.

Table 20-79. HW Prefetch Qualification Encoding within a Non-Architectural Umask

IA32_PERFEVTSELx MSRs	
Bit 13:12 Encoding	**Description**
11B	All inclusive
10B	Reserved
01B	Hardware prefetch only
00B	Exclude hardware prefetch

Some performance events may (a) support none of the three event-specific qualification encodings (b) may support core-specificity and agent specificity simultaneously (c) or may support core-specificity and hardware prefetch qualification simultaneously. Agent-specificity and hardware prefetch qualification are mutually exclusive.

In addition, some L2 events permit qualifications that distinguish cache coherent states. The sub-field definition for cache coherency state qualification is shown in Table 20-80. If no bits in the MESI qualification sub-field are set for an event that requires setting MESI qualification bits, the event count will not increment.

Table 20-80. MESI Qualification Definitions within a Non-Architectural Umask

IA32_PERFEVTSELx MSRs	
Bit Position 11:8	**Description**
Bit 11	Counts modified state
Bit 10	Counts exclusive state
Bit 9	Counts shared state
Bit 8	Counts Invalid state

20.6.2 Performance Monitoring (Processors Based on Intel® Core™ Microarchitecture)

In addition to architectural performance monitoring, processors based on the Intel Core microarchitecture support non-architectural performance monitoring events.

Architectural performance events can be collected using general-purpose performance counters. Non-architectural performance events can be collected using general-purpose performance counters (coupled with two IA32_PERFEVTSELx MSRs for detailed event configurations), or fixed-function performance counters (see Section 20.6.2.1). IA32_PERFEVTSELx MSRs are architectural; their layout is shown in Figure 20-1. Starting with Intel

Core 2 processor T 7700, fixed-function performance counters and associated counter control and status MSR becomes part of architectural performance monitoring version 2 facilities (see also Section 20.2.2).

Non-architectural performance events in processors based on Intel Core microarchitecture use event select values that are model-specific. Valid event mask (Umask) bits can be found at: https://perfmon-events.intel.com/. The UMASK field may contain sub-fields identical to those listed in Table 20-77, Table 20-78, Table 20-79, and Table 20-80. One or more of these sub-fields may apply to specific events on an event-by-event basis.

In addition, the UMASK filed may also contain a sub-field that allows detection specificity related to snoop responses. Bits of the snoop response qualification sub-field are defined in Table 20-81.

Table 20-81. Bus Snoop Qualification Definitions within a Non-Architectural Umask

IA32_PERFEVTSELx MSRs	
Bit Position 11:8	**Description**
Bit 11	HITM response
Bit 10	Reserved
Bit 9	HIT response
Bit 8	CLEAN response

There are also non-architectural events that support qualification of different types of snoop operation. The corresponding bit field for snoop type qualification are listed in Table 20-82.

Table 20-82. Snoop Type Qualification Definitions within a Non-Architectural Umask

IA32_PERFEVTSELx MSRs	
Bit Position 9:8	**Description**
Bit 9	CMP2I snoops
Bit 8	CMP2S snoops

No more than one sub-field of MESI, snoop response, and snoop type qualification sub-fields can be supported in a performance event.

NOTE

Software must write known values to the performance counters prior to enabling the counters. The content of general-purpose counters and fixed-function counters are undefined after INIT or RESET.

20.6.2.1 Fixed-function Performance Counters

Processors based on Intel Core microarchitecture provide three fixed-function performance counters. Bits beyond the width of the fixed counter are reserved and must be written as zeros. Model-specific fixed-function performance counters on processors that support Architectural Perfmon version 1 are 40 bits wide.

Each of the fixed-function counter is dedicated to count a pre-defined performance monitoring events. See Table 20-2 for details of the PMC addresses and what these events count.

Programming the fixed-function performance counters does not involve any of the IA32_PERFEVTSELx MSRs, and does not require specifying any event masks. Instead, the MSR IA32_FIXED_CTR_CTRL provides multiple sets of 4-bit fields; each 4-bit field controls the operation of a fixed-function performance counter (PMC). See Figures 20-43. Two sub-fields are defined for each control. See Figure 20-43; bit fields are:

- **Enable field (low 2 bits in each 4-bit control) —** When bit 0 is set, performance counting is enabled in the corresponding fixed-function performance counter to increment when the target condition associated with the architecture performance event occurs at ring 0.

When bit 1 is set, performance counting is enabled in the corresponding fixed-function performance counter to increment when the target condition associated with the architecture performance event occurs at ring greater than 0.

Writing 0 to both bits stops the performance counter. Writing 11B causes the counter to increment irrespective of privilege levels.

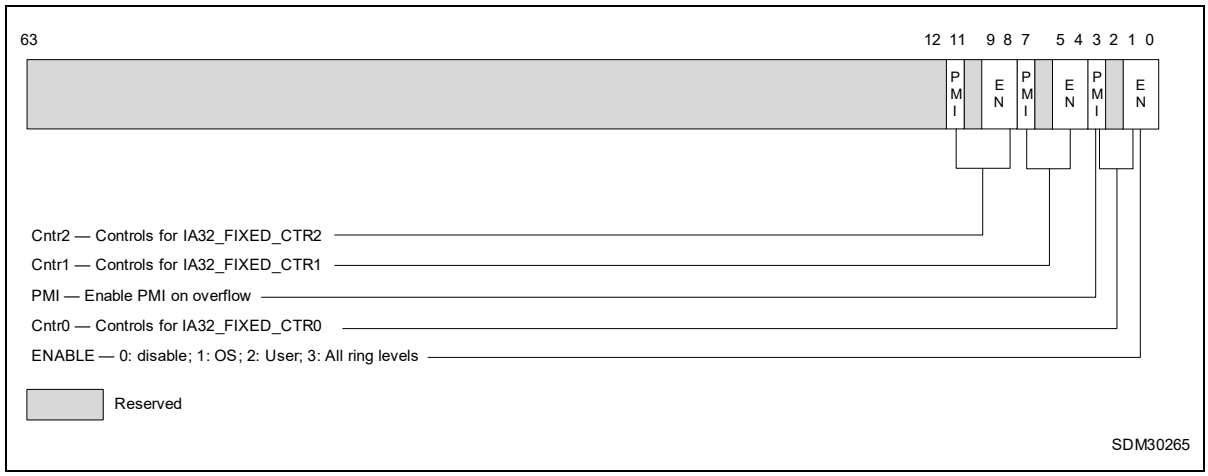

Figure 20-43. Layout of IA32_FIXED_CTR_CTRL MSR

- **PMI field (fourth bit in each 4-bit control)** — When set, the logical processor generates an exception through its local APIC on overflow condition of the respective fixed-function counter.

20.6.2.2 Global Counter Control Facilities

Processors based on Intel Core microarchitecture provides simplified performance counter control that simplifies the most frequent operations in programming performance events, i.e., enabling/disabling event counting and checking the status of counter overflows. This is done by the following three MSRs:

- MSR_PERF_GLOBAL_CTRL enables/disables event counting for all or any combination of fixed-function PMCs (IA32_FIXED_CTRx) or general-purpose PMCs via a single WRMSR.
- MSR_PERF_GLOBAL_STATUS allows software to query counter overflow conditions on any combination of fixed-function PMCs (IA32_FIXED_CTRx) or general-purpose PMCs via a single RDMSR.
- MSR_PERF_GLOBAL_OVF_CTRL allows software to clear counter overflow conditions on any combination of fixed-function PMCs (IA32_FIXED_CTRx) or general-purpose PMCs via a single WRMSR.

MSR_PERF_GLOBAL_CTRL MSR provides single-bit controls to enable counting in each performance counter (see Figure 20-44). Each enable bit in MSR_PERF_GLOBAL_CTRL is AND'ed with the enable bits for all privilege levels in the respective IA32_PERFEVTSELx or IA32_FIXED_CTR_CTRL MSRs to start/stop the counting of respective counters. Counting is enabled if the AND'ed results is true; counting is disabled when the result is false.

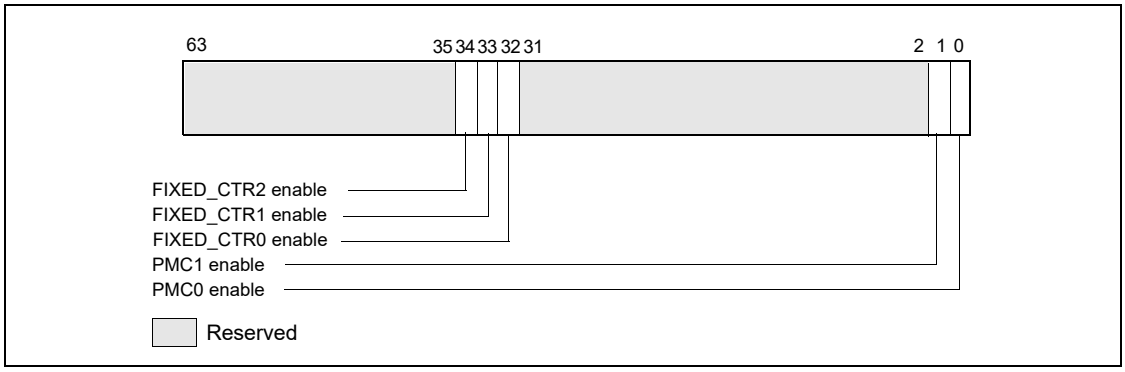

Figure 20-44. Layout of MSR_PERF_GLOBAL_CTRL MSR

MSR_PERF_GLOBAL_STATUS MSR provides single-bit status used by software to query the overflow condition of each performance counter. MSR_PERF_GLOBAL_STATUS[bit 62] indicates overflow conditions of the DS area data buffer. MSR_PERF_GLOBAL_STATUS[bit 63] provides a CondChgd bit to indicate changes to the state of performance monitoring hardware (see Figure 20-45). A value of 1 in bits 34:32, 1, 0 indicates an overflow condition has occurred in the associated counter.

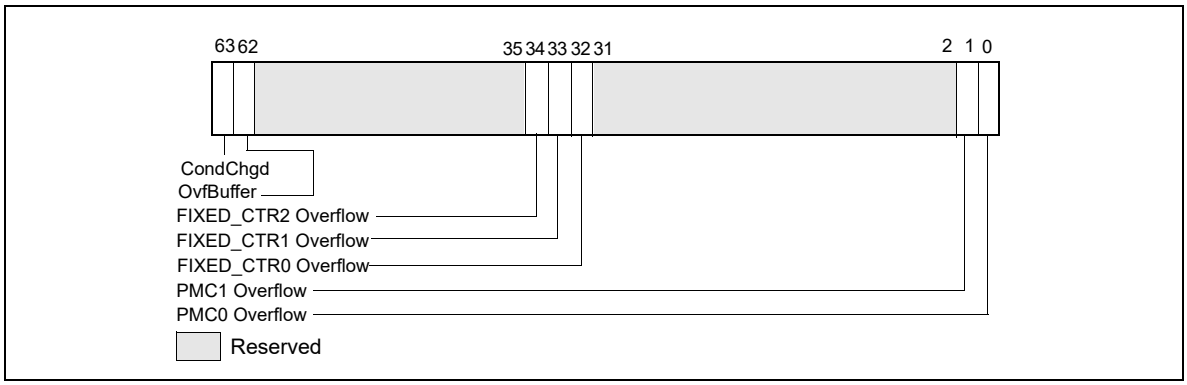

Figure 20-45. Layout of MSR_PERF_GLOBAL_STATUS MSR

When a performance counter is configured for PEBS, an overflow condition in the counter will arm PEBS. On the subsequent event following overflow, the processor will generate a PEBS event. On a PEBS event, the processor will perform bounds checks based on the parameters defined in the DS Save Area (see Section 18.4.9). Upon successful bounds checks, the processor will store the data record in the defined buffer area, clear the counter overflow status, and reload the counter. If the bounds checks fail, the PEBS will be skipped entirely. In the event that the PEBS buffer fills up, the processor will set the OvfBuffer bit in MSR_PERF_GLOBAL_STATUS.

MSR_PERF_GLOBAL_OVF_CTL MSR allows software to clear overflow the indicators for general-purpose or fixed-function counters via a single WRMSR (see Figure 20-46). Clear overflow indications when:

- Setting up new values in the event select and/or UMASK field for counting or interrupt-based event sampling.
- Reloading counter values to continue collecting next sample.
- Disabling event counting or interrupt-based event sampling.

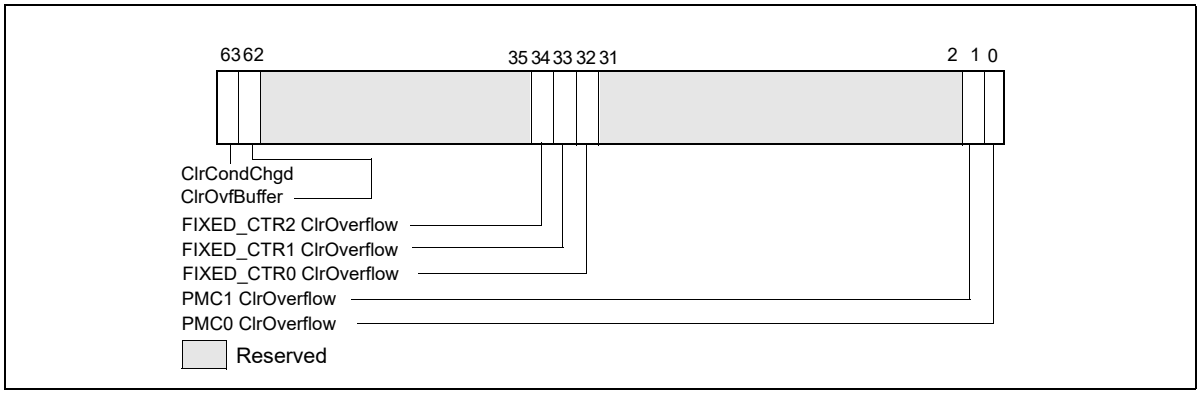

Figure 20-46. Layout of MSR_PERF_GLOBAL_OVF_CTRL MSR

20.6.2.3 At-Retirement Events

Many non-architectural performance events are impacted by the speculative nature of out-of-order execution. A subset of non-architectural performance events on processors based on Intel Core microarchitecture are enhanced with a tagging mechanism (similar to that found in Intel NetBurst® microarchitecture) that exclude contributions that arise from speculative execution. The at-retirement events available in processors based on Intel Core micro-architecture does not require special MSR programming control (see Section 20.6.3.6, "At-Retirement Counting"), but is limited to IA32_PMC0. See Table 20-83 for a list of events available to processors based on Intel Core micro-architecture.

Table 20-83. At-Retirement Performance Events for Intel Core Microarchitecture

Event Name	UMask	Event Select
ITLB_MISS_RETIRED	00H	C9H
MEM_LOAD_RETIRED.L1D_MISS	01H	CBH
MEM_LOAD_RETIRED.L1D_LINE_MISS	02H	CBH
MEM_LOAD_RETIRED.L2_MISS	04H	CBH
MEM_LOAD_RETIRED.L2_LINE_MISS	08H	CBH
MEM_LOAD_RETIRED.DTLB_MISS	10H	CBH

20.6.2.4 Processor Event Based Sampling (PEBS)

Processors based on Intel Core microarchitecture also support processor event based sampling (PEBS). This feature was introduced by processors based on Intel NetBurst microarchitecture.

PEBS uses a debug store mechanism and a performance monitoring interrupt to store a set of architectural state information for the processor. The information provides architectural state of the instruction executed after the instruction that caused the event (See Section 20.6.2.4.2 and Section 18.4.9).

In cases where the same instruction causes BTS and PEBS to be activated, PEBS is processed before BTS are processed. The PMI request is held until the processor completes processing of PEBS and BTS.

For processors based on Intel Core microarchitecture, precise events that can be used with PEBS are listed in Table 20-84. The procedure for detecting availability of PEBS is the same as described in Section 20.6.3.8.1.

Table 20-84. PEBS Performance Events for Intel Core Microarchitecture

Event Name	UMask	Event Select
INSTR_RETIRED.ANY_P	00H	C0H
X87_OPS_RETIRED.ANY	FEH	C1H
BR_INST_RETIRED.MISPRED	00H	C5H
SIMD_INST_RETIRED.ANY	1FH	C7H
MEM_LOAD_RETIRED.L1D_MISS	01H	CBH
MEM_LOAD_RETIRED.L1D_LINE_MISS	02H	CBH
MEM_LOAD_RETIRED.L2_MISS	04H	CBH
MEM_LOAD_RETIRED.L2_LINE_MISS	08H	CBH
MEM_LOAD_RETIRED.DTLB_MISS	10H	CBH

20.6.2.4.1 Setting up the PEBS Buffer

For processors based on Intel Core microarchitecture, PEBS is available using IA32_PMC0 only. Use the following procedure to set up the processor and IA32_PMC0 counter for PEBS:

1. Set up the precise event buffering facilities. Place values in the precise event buffer base, precise event index, precise event absolute maximum, precise event interrupt threshold, and precise event counter reset fields of the DS buffer management area. In processors based on Intel Core microarchitecture, PEBS records consist of 64-bit address entries. See Figure 18-8 to set up the precise event records buffer in memory.
2. Enable PEBS. Set the Enable PEBS on PMC0 flag (bit 0) in IA32_PEBS_ENABLE MSR.
3. Set up the IA32_PMC0 performance counter and IA32_PERFEVTSEL0 for an event listed in Table 20-84.

20.6.2.4.2 PEBS Record Format

The PEBS record format may be extended across different processor implementations. The IA32_PERF_CAPABILITES MSR defines a mechanism for software to handle the evolution of PEBS record format in processors that support architectural performance monitoring with version ID equals 2 or higher. The bit fields of IA32_PERF_CAPABILITES are defined in Table 2-2 of Chapter 2, "Model-Specific Registers (MSRs)" in the *Intel® 64 and IA-32 Architectures Software Developer's Manual, Volume 4*. The relevant bit fields that governs PEBS are:

- PEBSTrap [bit 6]: When set, PEBS recording is trap-like. After the PEBS-enabled counter has overflowed, PEBS record is recorded for the next PEBS-able event at the completion of the sampled instruction causing the PEBS event. When clear, PEBS recording is fault-like. The PEBS record is recorded before the sampled instruction causing the PEBS event.
- PEBSSaveArchRegs [bit 7]: When set, PEBS will save architectural register and state information according to the encoded value of the PEBSRecordFormat field. When clear, only the return instruction pointer and flags are recorded. On processors based on Intel Core microarchitecture, this bit is always 1.
- PEBSRecordFormat [bits 11:8]: Valid encodings are:
  - 0000B: Only general-purpose registers, instruction pointer and RFLAGS registers are saved in each PEBS record (See Section 20.6.3.8).
  - 0001B: PEBS record includes additional information of IA32_PERF_GLOBAL_STATUS and load latency data. (See Section 20.3.1.1.1).
  - 0010B: PEBS record includes additional information of IA32_PERF_GLOBAL_STATUS, load latency data, and TSX tuning information. (See Section 20.3.6.2).
  - 0011B: PEBS record includes additional information of load latency data, TSX tuning information, TSC data, and the applicable counter field replaces IA32_PERF_GLOBAL_STATUS at offset 90H. (See Section 20.3.8.1.1).
  - 0100B: PEBS record contents are defined by elections in MSR_PEBS_DATA_CFG. (See Section 20.9.2.3). The PEBS Configuration Buffer is defined as shown in Figure 20-64 with Counter Reset fields allocation for 8 general-purpose counters followed by 4 fixed-function counters.

— 0101B: PEBS record contents are defined by elections in MSR_PEBS_DATA_CFG. (See Section 20.9.2.3). The PEBS Configuration Buffer is defined as shown in Figure 20-64 with Counter Reset fields allocation for 32 general-purpose counters followed by 16 fixed-function counters.

20.6.2.4.3 Writing a PEBS Interrupt Service Routine

The PEBS facilities share the same interrupt vector and interrupt service routine (called the DS ISR) with the Interrupt-based event sampling and BTS facilities. To handle PEBS interrupts, PEBS handler code must be included in the DS ISR. See Section 18.4.9.1, "64 Bit Format of the DS Save Area," for guidelines when writing the DS ISR.

The service routine can query MSR_PERF_GLOBAL_STATUS to determine which counter(s) caused of overflow condition. The service routine should clear overflow indicator by writing to MSR_PERF_GLOBAL_OVF_CTL.

A comparison of the sequence of requirements to program PEBS for processors based on Intel Core and Intel NetBurst microarchitectures is listed in Table 20-85.

Table 20-85. Requirements to Program PEBS

	For Processors based on Intel Core microarchitecture	**For Processors based on Intel NetBurst microarchitecture**
Verify PEBS support of processor/OS.	▪ IA32_MISC_ENABLE.EMON_AVAILABE (bit 7) is set. ▪ IA32_MISC_ENABLE.PEBS_UNAVAILABE (bit 12) is clear.	
Ensure counters are in disabled.	On initial set up or changing event configurations, write MSR_PERF_GLOBAL_CTRL MSR (38FH) with 0. On subsequent entries: ▪ Clear all counters if "Counter Freeze on PMI" is not enabled. ▪ If IA32_DebugCTL.Freeze is enabled, counters are automatically disabled. Counters MUST be stopped before writing.[1]	Optional
Disable PEBS.	Clear ENABLE PMC0 bit in IA32_PEBS_ENABLE MSR (3F1H).	Optional
Check overflow conditions.	Check MSR_PERF_GLOBAL_STATUS MSR (38EH) handle any overflow conditions.	Check OVF flag of each CCCR for overflow condition
Clear overflow status.	Clear MSR_PERF_GLOBAL_STATUS MSR (38EH) using IA32_PERF_GLOBAL_OVF_CTRL MSR (390H).	Clear OVF flag of each CCCR.
Write "sample-after" values.	Configure the counter(s) with the sample after value.	
Configure specific counter configuration MSR.	▪ Set local enable bit 22 - 1. ▪ Do NOT set local counter PMI/INT bit, bit 20 - 0. ▪ Event programmed must be PEBS capable.	▪ Set appropriate OVF_PMI bits - 1. ▪ Only CCCR for MSR_IQ_COUNTER4 support PEBS.
Allocate buffer for PEBS states.	Allocate a buffer in memory for the precise information.	
Program the IA32_DS_AREA MSR.	Program the IA32_DS_AREA MSR.	
Configure the PEBS buffer management records.	Configure the PEBS buffer management records in the DS buffer management area.	
Configure/Enable PEBS.	Set Enable PMC0 bit in IA32_PEBS_ENABLE MSR (3F1H).	Configure MSR_PEBS_ENABLE, MSR_PEBS_MATRIX_VERT, and MSR_PEBS_MATRIX_HORZ as needed.
Enable counters.	Set Enable bits in MSR_PERF_GLOBAL_CTRL MSR (38FH).	Set each CCCR enable bit 12 - 1.

NOTES:

1. Counters read while enabled are not guaranteed to be precise with event counts that occur in timing proximity to the RDMSR.

20.6.2.4.4 Re-configuring PEBS Facilities

When software needs to reconfigure PEBS facilities, it should allow a quiescent period between stopping the prior event counting and setting up a new PEBS event. The quiescent period is to allow any latent residual PEBS records to complete its capture at their previously specified buffer address (provided by IA32_DS_AREA).

20.6.3 Performance Monitoring (Processors Based on Intel NetBurst® Microarchitecture)

The performance monitoring mechanism provided in processors based on Intel NetBurst microarchitecture is different from that provided in the P6 family and Pentium processors. While the general concept of selecting, filtering, counting, and reading performance events through the WRMSR, RDMSR, and RDPMC instructions is unchanged, the setup mechanism and MSR layouts are incompatible with the P6 family and Pentium processor mechanisms. Also, the RDPMC instruction has been extended to support faster reading of counters and to read all performance counters available in processors based on Intel NetBurst microarchitecture.

The event monitoring mechanism consists of the following facilities:

- The IA32_MISC_ENABLE MSR, which indicates the availability in an Intel 64 or IA-32 processor of the performance monitoring and processor event-based sampling (PEBS) facilities.
- Event selection control (ESCR) MSRs for selecting events to be monitored with specific performance counters. The number available differs by family and model (43 to 45).
- 18 performance counter MSRs for counting events.
- 18 counter configuration control (CCCR) MSRs, with one CCCR associated with each performance counter. CCCRs sets up an associated performance counter for a specific method of counting.
- A debug store (DS) save area in memory for storing PEBS records.
- The IA32_DS_AREA MSR, which establishes the location of the DS save area.
- The debug store (DS) feature flag (bit 21) returned by the CPUID instruction, which indicates the availability of the DS mechanism.
- The MSR_PEBS_ENABLE MSR, which enables the PEBS facilities and replay tagging used in at-retirement event counting.
- A set of predefined events and event metrics that simplify the setting up of the performance counters to count specific events.

Table 20-86 lists the performance counters and their associated CCCRs, along with the ESCRs that select events to be counted for each performance counter. Predefined event metrics and events can be found at: https://perfmon-events.intel.com/.

Table 20-86. Performance Counter MSRs and Associated CCCR and ESCR MSRs (Processors Based on Intel NetBurst Microarchitecture)

Counter			CCCR		ESCR		
Name	**No.**	**Addr**	**Name**	**Addr**	**Name**	**No.**	**Addr**
MSR_BPU_COUNTER0	0	300H	MSR_BPU_CCCR0	360H	MSR_BSU_ESCR0 MSR_FSB_ESCR0 MSR_MOB_ESCR0 MSR_PMH_ESCR0 MSR_BPU_ESCR0 MSR_IS_ESCR0 MSR_ITLB_ESCR0 MSR_IX_ESCR0	7 6 2 4 0 1 3 5	3A0H 3A2H 3AAH 3ACH 3B2H 3B4H 3B6H 3C8H

Table 20-86. Performance Counter MSRs and Associated CCCR and ESCR MSRs (Processors Based on Intel NetBurst Microarchitecture) (Contd.)

Counter			CCCR		ESCR		
Name	**No.**	**Addr**	**Name**	**Addr**	**Name**	**No.**	**Addr**
MSR_BPU_COUNTER1	1	301H	MSR_BPU_CCCR1	361H	MSR_BSU_ESCR0 MSR_FSB_ESCR0 MSR_MOB_ESCR0 MSR_PMH_ESCR0 MSR_BPU_ESCR0 MSR_IS_ESCR0 MSR_ITLB_ESCR0 MSR_IX_ESCR0	7 6 2 4 0 1 3 5	3A0H 3A2H 3AAH 3ACH 3B2H 3B4H 3B6H 3C8H
MSR_BPU_COUNTER2	2	302H	MSR_BPU_CCCR2	362H	MSR_BSU_ESCR1 MSR_FSB_ESCR1 MSR_MOB_ESCR1 MSR_PMH_ESCR1 MSR_BPU_ESCR1 MSR_IS_ESCR1 MSR_ITLB_ESCR1 MSR_IX_ESCR1	7 6 2 4 0 1 3 5	3A1H 3A3H 3ABH 3ADH 3B3H 3B5H 3B7H 3C9H
MSR_BPU_COUNTER3	3	303H	MSR_BPU_CCCR3	363H	MSR_BSU_ESCR1 MSR_FSB_ESCR1 MSR_MOB_ESCR1 MSR_PMH_ESCR1 MSR_BPU_ESCR1 MSR_IS_ESCR1 MSR_ITLB_ESCR1 MSR_IX_ESCR1	7 6 2 4 0 1 3 5	3A1H 3A3H 3ABH 3ADH 3B3H 3B5H 3B7H 3C9H
MSR_MS_COUNTER0	4	304H	MSR_MS_CCCR0	364H	MSR_MS_ESCR0 MSR_TBPU_ESCR0 MSR_TC_ESCR0	0 2 1	3C0H 3C2H 3C4H
MSR_MS_COUNTER1	5	305H	MSR_MS_CCCR1	365H	MSR_MS_ESCR0 MSR_TBPU_ESCR0 MSR_TC_ESCR0	0 2 1	3C0H 3C2H 3C4H
MSR_MS_COUNTER2	6	306H	MSR_MS_CCCR2	366H	MSR_MS_ESCR1 MSR_TBPU_ESCR1 MSR_TC_ESCR1	0 2 1	3C1H 3C3H 3C5H
MSR_MS_COUNTER3	7	307H	MSR_MS_CCCR3	367H	MSR_MS_ESCR1 MSR_TBPU_ESCR1 MSR_TC_ESCR1	0 2 1	3C1H 3C3H 3C5H
MSR_FLAME_COUNTER0	8	308H	MSR_FLAME_CCCR0	368H	MSR_FIRM_ESCR0 MSR_FLAME_ESCR0 MSR_DAC_ESCR0 MSR_SAAT_ESCR0 MSR_U2L_ESCR0	1 0 5 2 3	3A4H 3A6H 3A8H 3AEH 3B0H
MSR_FLAME_COUNTER1	9	309H	MSR_FLAME_CCCR1	369H	MSR_FIRM_ESCR0 MSR_FLAME_ESCR0 MSR_DAC_ESCR0 MSR_SAAT_ESCR0 MSR_U2L_ESCR0	1 0 5 2 3	3A4H 3A6H 3A8H 3AEH 3B0H
MSR_FLAME_COUNTER2	10	30AH	MSR_FLAME_CCCR2	36AH	MSR_FIRM_ESCR1 MSR_FLAME_ESCR1 MSR_DAC_ESCR1 MSR_SAAT_ESCR1 MSR_U2L_ESCR1	1 0 5 2 3	3A5H 3A7H 3A9H 3AFH 3B1H
MSR_FLAME_COUNTER3	11	30BH	MSR_FLAME_CCCR3	36BH	MSR_FIRM_ESCR1 MSR_FLAME_ESCR1 MSR_DAC_ESCR1 MSR_SAAT_ESCR1 MSR_U2L_ESCR1	1 0 5 2 3	3A5H 3A7H 3A9H 3AFH 3B1H

Table 20-86. Performance Counter MSRs and Associated CCCR and ESCR MSRs (Processors Based on Intel NetBurst Microarchitecture) (Contd.)

Counter			CCCR		ESCR		
Name	**No.**	**Addr**	**Name**	**Addr**	**Name**	**No.**	**Addr**
MSR_IQ_COUNTER0	12	30CH	MSR_IQ_CCCR0	36CH	MSR_CRU_ESCR0 MSR_CRU_ESCR2 MSR_CRU_ESCR4 MSR_IQ_ESCR0[1] MSR_RAT_ESCR0 MSR_SSU_ESCR0 MSR_ALF_ESCR0	4 5 6 0 2 3 1	3B8H 3CCH 3E0H 3BAH 3BCH 3BEH 3CAH
MSR_IQ_COUNTER1	13	30DH	MSR_IQ_CCCR1	36DH	MSR_CRU_ESCR0 MSR_CRU_ESCR2 MSR_CRU_ESCR4 MSR_IQ_ESCR0[1] MSR_RAT_ESCR0 MSR_SSU_ESCR0 MSR_ALF_ESCR0	4 5 6 0 2 3 1	3B8H 3CCH 3E0H 3BAH 3BCH 3BEH 3CAH
MSR_IQ_COUNTER2	14	30EH	MSR_IQ_CCCR2	36EH	MSR_CRU_ESCR1 MSR_CRU_ESCR3 MSR_CRU_ESCR5 MSR_IQ_ESCR1[1] MSR_RAT_ESCR1 MSR_ALF_ESCR1	4 5 6 0 2 1	3B9H 3CDH 3E1H 3BBH 3BDH 3CBH
MSR_IQ_COUNTER3	15	30FH	MSR_IQ_CCCR3	36FH	MSR_CRU_ESCR1 MSR_CRU_ESCR3 MSR_CRU_ESCR5 MSR_IQ_ESCR1[1] MSR_RAT_ESCR1 MSR_ALF_ESCR1	4 5 6 0 2 1	3B9H 3CDH 3E1H 3BBH 3BDH 3CBH
MSR_IQ_COUNTER4	16	310H	MSR_IQ_CCCR4	370H	MSR_CRU_ESCR0 MSR_CRU_ESCR2 MSR_CRU_ESCR4 MSR_IQ_ESCR0[1] MSR_RAT_ESCR0 MSR_SSU_ESCR0 MSR_ALF_ESCR0	4 5 6 0 2 3 1	3B8H 3CCH 3E0H 3BAH 3BCH 3BEH 3CAH
MSR_IQ_COUNTER5	17	311H	MSR_IQ_CCCR5	371H	MSR_CRU_ESCR1 MSR_CRU_ESCR3 MSR_CRU_ESCR5 MSR_IQ_ESCR1[1] MSR_RAT_ESCR1 MSR_ALF_ESCR1	4 5 6 0 2 1	3B9H 3CDH 3E1H 3BBH 3BDH 3CBH

NOTES:

1. MSR_IQ_ESCR0 and MSR_IQ_ESCR1 are available only on early processor builds (family 0FH, models 01H-02H). These MSRs are not available on later versions.

The types of events that can be counted with these performance monitoring facilities are divided into two classes: non-retirement events and at-retirement events.

- Non-retirement events are events that occur any time during instruction execution (such as bus transactions or cache transactions).
- At-retirement events are events that are counted at the retirement stage of instruction execution, which allows finer granularity in counting events and capturing machine state.

  The at-retirement counting mechanism includes facilities for tagging μops that have encountered a particular performance event during instruction execution. Tagging allows events to be sorted between those that occurred on an execution path that resulted in architectural state being committed at retirement as well as events that occurred on an execution path where the results were eventually cancelled and never committed to architectural state (such as, the execution of a mispredicted branch).

The Pentium 4 and Intel Xeon processor performance monitoring facilities support the three usage models described below. The first two models can be used to count both non-retirement and at-retirement events; the third model is used to count a subset of at-retirement events:

- **Event counting —** A performance counter is configured to count one or more types of events. While the counter is counting, software reads the counter at selected intervals to determine the number of events that have been counted between the intervals.
- **Interrupt-based event sampling —** A performance counter is configured to count one or more types of events and to generate an interrupt when it overflows. To trigger an overflow, the counter is preset to a modulus value that will cause the counter to overflow after a specific number of events have been counted.

  When the counter overflows, the processor generates a performance monitoring interrupt (PMI). The interrupt service routine for the PMI then records the return instruction pointer (RIP), resets the modulus, and restarts the counter. Code performance can be analyzed by examining the distribution of RIPs with a tool like the VTune™ Performance Analyzer.
- **Processor event-based sampling (PEBS) —** In PEBS, the processor writes a record of the architectural state of the processor to a memory buffer after the counter overflows. The records of architectural state provide additional information for use in performance tuning. Processor-based event sampling can be used to count only a subset of at-retirement events. PEBS captures more precise processor state information compared to interrupt based event sampling, because the latter need to use the interrupt service routine to re-construct the architectural states of processor.

The following sections describe the MSRs and data structures used for performance monitoring in the Pentium 4 and Intel Xeon processors.

20.6.3.1 ESCR MSRs

The 45 ESCR MSRs (see Table 20-86) allow software to select specific events to be countered. Each ESCR is usually associated with a pair of performance counters (see Table 20-86) and each performance counter has several ESCRs associated with it (allowing the events counted to be selected from a variety of events).

Figure 20-47 shows the layout of an ESCR MSR. The functions of the flags and fields are:

- **USR flag, bit 2 —** When set, events are counted when the processor is operating at a current privilege level (CPL) of 1, 2, or 3. These privilege levels are generally used by application code and unprotected operating system code.
- **OS flag, bit 3 —** When set, events are counted when the processor is operating at CPL of 0. This privilege level is generally reserved for protected operating system code. (When both the OS and USR flags are set, events are counted at all privilege levels.)

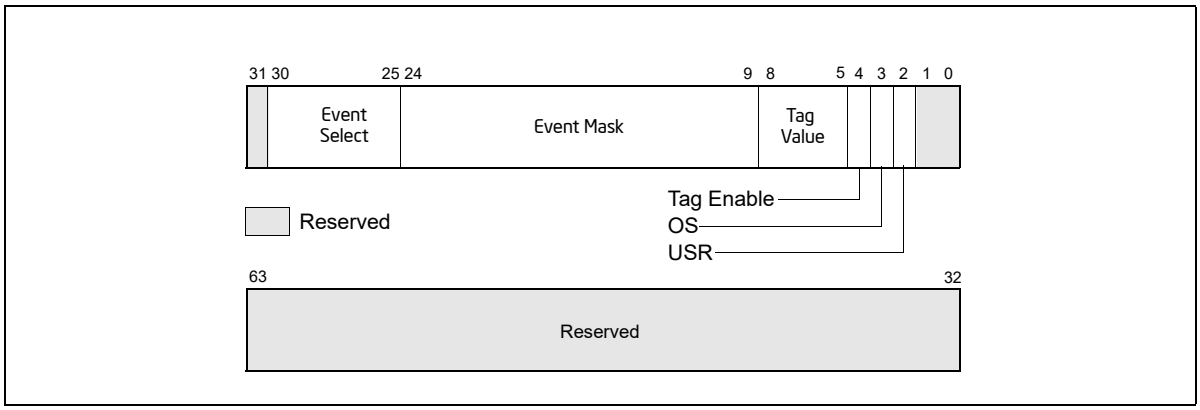

Figure 20-47. Event Selection Control Register (ESCR) for Pentium 4 and Intel® Xeon® Processors without Intel HT Technology Support

- **Tag enable, bit 4 —** When set, enables tagging of μops to assist in at-retirement event counting; when clear, disables tagging. See Section 20.6.3.6, "At-Retirement Counting."

- **Tag value field, bits 5 through 8 —** Selects a tag value to associate with a μop to assist in at-retirement event counting.
- **Event mask field, bits 9 through 24 —** Selects events to be counted from the event class selected with the event select field.
- **Event select field, bits 25 through 30) —** Selects a class of events to be counted. The events within this class that are counted are selected with the event mask field.

When setting up an ESCR, the event select field is used to select a specific class of events to count, such as retired branches. The event mask field is then used to select one or more of the specific events within the class to be counted. For example, when counting retired branches, four different events can be counted: branch not taken predicted, branch not taken mispredicted, branch taken predicted, and branch taken mispredicted. The OS and USR flags allow counts to be enabled for events that occur when operating system code and/or application code are being executed. If neither the OS nor USR flag is set, no events will be counted.

The ESCRs are initialized to all 0s on reset. The flags and fields of an ESCR are configured by writing to the ESCR using the WRMSR instruction. Table 20-86 gives the addresses of the ESCR MSRs.

Writing to an ESCR MSR does not enable counting with its associated performance counter; it only selects the event or events to be counted. The CCCR for the selected performance counter must also be configured. Configuration of the CCCR includes selecting the ESCR and enabling the counter.

20.6.3.2 Performance Counters

The performance counters in conjunction with the counter configuration control registers (CCCRs) are used for filtering and counting the events selected by the ESCRs. Processors based on Intel NetBurst microarchitecture provide 18 performance counters organized into 9 pairs. A pair of performance counters is associated with a particular subset of events and ESCR's (see Table 20-86). The counter pairs are partitioned into four groups:

- The BPU group, includes two performance counter pairs:
  - MSR_BPU_COUNTER0 and MSR_BPU_COUNTER1.
  - MSR_BPU_COUNTER2 and MSR_BPU_COUNTER3.
- The MS group, includes two performance counter pairs:
  - MSR_MS_COUNTER0 and MSR_MS_COUNTER1.
  - MSR_MS_COUNTER2 and MSR_MS_COUNTER3.
- The FLAME group, includes two performance counter pairs:
  - MSR_FLAME_COUNTER0 and MSR_FLAME_COUNTER1.
  - MSR_FLAME_COUNTER2 and MSR_FLAME_COUNTER3.
- The IQ group, includes three performance counter pairs:
  - MSR_IQ_COUNTER0 and MSR_IQ_COUNTER1.
  - MSR_IQ_COUNTER2 and MSR_IQ_COUNTER3.
  - MSR_IQ_COUNTER4 and MSR_IQ_COUNTER5.

The MSR_IQ_COUNTER4 counter in the IQ group provides support for the PEBS.

Alternate counters in each group can be cascaded: the first counter in one pair can start the first counter in the second pair and vice versa. A similar cascading is possible for the second counters in each pair. For example, within the BPU group of counters, MSR_BPU_COUNTER0 can start MSR_BPU_COUNTER2 and vice versa, and MSR_BPU_COUNTER1 can start MSR_BPU_COUNTER3 and vice versa (see Section 20.6.3.5.6, "Cascading Counters"). The cascade flag in the CCCR register for the performance counter enables the cascading of counters.

Each performance counter is 40-bits wide (see Figure 20-48). The RDPMC instruction is intended to allow reading of either the full counter-width (40-bits) or, if ECX[31] is set to 1, the low 32-bits of the counter. Reading the low 32-bits is faster than reading the full counter width and is appropriate in situations where the count is small enough to be contained in 32 bits. In such cases, counter bits 31:0 are written to EAX, while 0 is written to EDX.

The RDPMC instruction can be used by programs or procedures running at any privilege level and in virtual-8086 mode to read these counters. The PCE flag in control register CR4 (bit 8) allows the use of this instruction to be restricted to only programs and procedures running at privilege level 0.

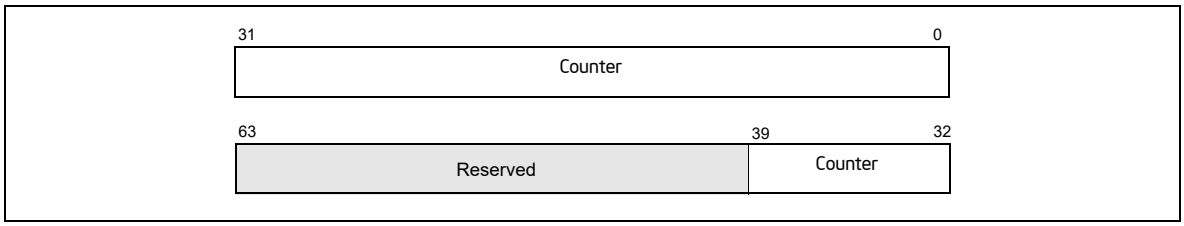

Figure 20-48. Performance Counter (Pentium 4 and Intel® Xeon® Processors)

The RDPMC instruction is not serializing or ordered with other instructions. Thus, it does not necessarily wait until all previous instructions have been executed before reading the counter. Similarly, subsequent instructions may begin execution before the RDPMC instruction operation is performed.

Only the operating system, executing at privilege level 0, can directly manipulate the performance counters, using the RDMSR and WRMSR instructions. A secure operating system would clear the PCE flag during system initialization to disable direct user access to the performance-monitoring counters, but provide a user-accessible programming interface that emulates the RDPMC instruction.

Some uses of the performance counters require the counters to be preset before counting begins (that is, before the counter is enabled). This can be accomplished by writing to the counter using the WRMSR instruction. To set a counter to a specified number of counts before overflow, enter a 2s complement negative integer in the counter. The counter will then count from the preset value up to -1 and overflow. Writing to a performance counter in a Pentium 4 or Intel Xeon processor with the WRMSR instruction causes all 40 bits of the counter to be written.

20.6.3.3 CCCR MSRs

Each of the 18 performance counters has one CCCR MSR associated with it (see Table 20-86). The CCCRs control the filtering and counting of events as well as interrupt generation. Figure 20-49 shows the layout of an CCCR MSR. The functions of the flags and fields are as follows:

- **Enable flag, bit 12 —** When set, enables counting; when clear, the counter is disabled. This flag is cleared on reset.
- **ESCR select field, bits 13 through 15 —** Identifies the ESCR to be used to select events to be counted with the counter associated with the CCCR.
- **Compare flag, bit 18 —** When set, enables filtering of the event count; when clear, disables filtering. The filtering method is selected with the threshold, complement, and edge flags.
- **Complement flag, bit 19 —** Selects how the incoming event count is compared with the threshold value. When set, event counts that are less than or equal to the threshold value result in a single count being delivered to the performance counter; when clear, counts greater than the threshold value result in a count being delivered to the performance counter (see Section 20.6.3.5.2, "Filtering Events"). The complement flag is not active unless the compare flag is set.
- **Threshold field, bits 20 through 23 —** Selects the threshold value to be used for comparisons. The processor examines this field only when the compare flag is set, and uses the complement flag setting to determine the type of threshold comparison to be made. The useful range of values that can be entered in this field depend on the type of event being counted (see Section 20.6.3.5.2, "Filtering Events").
- **Edge flag, bit 24 —** When set, enables rising edge (false-to-true) edge detection of the threshold comparison output for filtering event counts; when clear, rising edge detection is disabled. This flag is active only when the compare flag is set.

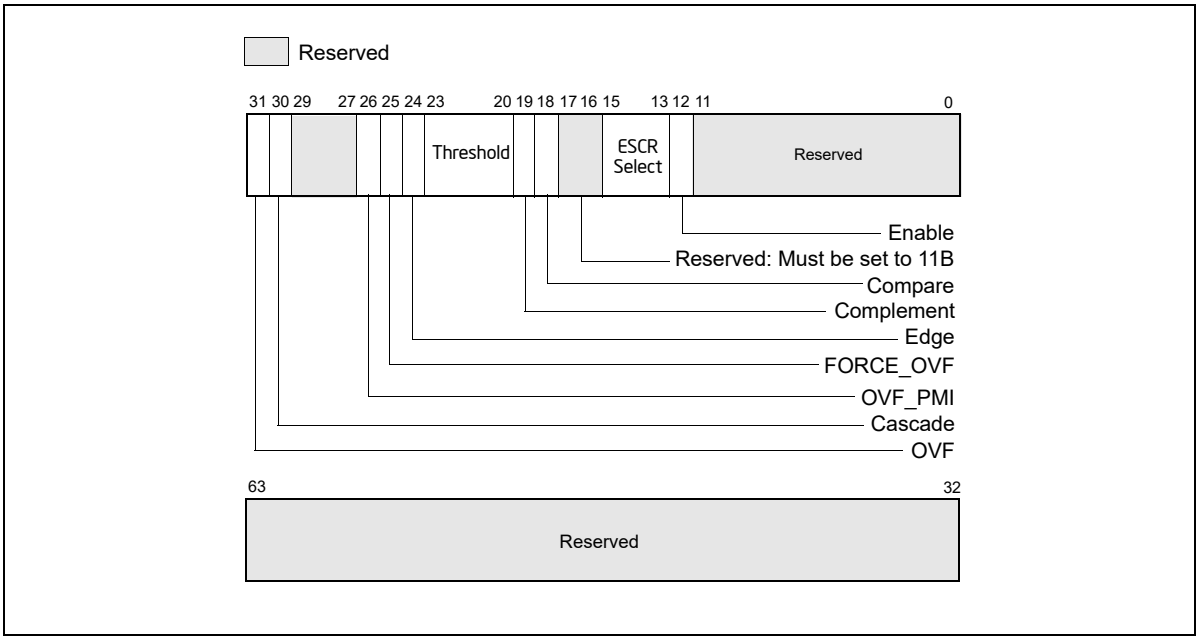

Figure 20-49. Counter Configuration Control Register (CCCR)

- **FORCE_OVF flag, bit 25 —** When set, forces a counter overflow on every counter increment; when clear, overflow only occurs when the counter actually overflows.
- **OVF_PMI flag, bit 26 —** When set, causes a performance monitor interrupt (PMI) to be generated when the counter overflows occurs; when clear, disables PMI generation. Note that the PMI is generated on the next event count after the counter has overflowed.
- **Cascade flag, bit 30 —** When set, enables counting on one counter of a counter pair when its alternate counter in the other the counter pair in the same counter group overflows (see Section 20.6.3.2, "Performance Counters," for further details); when clear, disables cascading of counters.
- **OVF flag, bit 31 —** Indicates that the counter has overflowed when set. This flag is a sticky flag that must be explicitly cleared by software.

The CCCRs are initialized to all 0s on reset.

The events that an enabled performance counter actually counts are selected and filtered by the following flags and fields in the ESCR and CCCR registers and in the qualification order given:

1. The event select and event mask fields in the ESCR select a class of events to be counted and one or more event types within the class, respectively.
2. The OS and USR flags in the ESCR selected the privilege levels at which events will be counted.
3. The ESCR select field of the CCCR selects the ESCR. Since each counter has several ESCRs associated with it, one ESCR must be chosen to select the classes of events that may be counted.
4. The compare and complement flags and the threshold field of the CCCR select an optional threshold to be used in qualifying an event count.
5. The edge flag in the CCCR allows events to be counted only on rising-edge transitions.

The qualification order in the above list implies that the filtered output of one "stage" forms the input for the next. For instance, events filtered using the privilege level flags can be further qualified by the compare and complement flags and the threshold field, and an event that matched the threshold criteria, can be further qualified by edge detection.

The uses of the flags and fields in the CCCRs are discussed in greater detail in Section 20.6.3.5, "Programming the Performance Counters for Non-Retirement Events."

20.6.3.4 Debug Store (DS) Mechanism

The debug store (DS) mechanism was introduced with processors based on Intel NetBurst microarchitecture to allow various types of information to be collected in memory-resident buffers for use in debugging and tuning programs. The DS mechanism can be used to collect two types of information: branch records and processor event-based sampling (PEBS) records. The availability of the DS mechanism in a processor is indicated with the DS feature flag (bit 21) returned by the CPUID instruction.

See Section 18.4.5, "Branch Trace Store (BTS)," and Section 20.6.3.8, "Processor Event-Based Sampling (PEBS)," for a description of these facilities. Records collected with the DS mechanism are saved in the DS save area. See Section 18.4.9, "BTS and DS Save Area."

20.6.3.5 Programming the Performance Counters for Non-Retirement Events

The basic steps to program a performance counter and to count events include the following:

1. Select the event or events to be counted.
2. For each event, select an ESCR that supports the event.
3. Match the CCCR Select value and ESCR name to a value listed in Table 20-86; select a CCCR and performance counter.
4. Set up an ESCR for the specific event or events to be counted and the privilege levels at which they are to be counted.
5. Set up the CCCR for the performance counter by selecting the ESCR and the desired event filters.
6. Set up the CCCR for optional cascading of event counts, so that when the selected counter overflows its alternate counter starts.
7. Set up the CCCR to generate an optional performance monitor interrupt (PMI) when the counter overflows. If PMI generation is enabled, the local APIC must be set up to deliver the interrupt to the processor and a handler for the interrupt must be in place.
8. Enable the counter to begin counting.

20.6.3.5.1 Selecting Events to Count

There is a set of at-retirement events for processors based on Intel NetBurst microarchitecture. For each event, setup information is provided. Table 20-87 gives an example of one of the events.

Table 20-87. Event Example

Event Name	Event Parameters	Parameter Value	Description
branch_retired			Counts the retirement of a branch. Specify one or more mask bits to select any combination of branch taken, not-taken, predicted, and mispredicted.
	ESCR restrictions	MSR_CRU_ESCR2 MSR_CRU_ESCR3	See Table 15-3 for the addresses of the ESCR MSRs.
	Counter numbers per ESCR	ESCR2: 12, 13, 16 ESCR3: 14, 15, 17	The counter numbers associated with each ESCR are provided. The performance counters and corresponding CCCRs can be obtained from Table 15-3.
	ESCR Event Select	06H	ESCR[31:25]
	ESCR Event Mask	 Bit 0: MMNP 1: MMNM 2: MMTP 3: MMTM	ESCR[24:9] Branch Not-taken Predicted Branch Not-taken Mispredicted Branch Taken Predicted Branch Taken Mispredicted
	CCCR Select	05H	CCCR[15:13]

Table 20-87. Event Example (Contd.)

Event Name	Event Parameters	Parameter Value	Description
	Event Specific Notes		P6: EMON_BR_INST_RETIRED
	Can Support PEBS	No	
	Requires Additional MSRs for Tagging	No	

Event Parameters are described below.

- **ESCR restrictions —** Lists the ESCRs that can be used to program the event. Typically only one ESCR is needed to count an event.
- **Counter numbers per ESCR —** Lists which performance counters are associated with each ESCR. Table 20-86 gives the name of the counter and CCCR for each counter number. Typically only one counter is needed to count the event.
- **ESCR event select —** Gives the value to be placed in the event select field of the ESCR to select the event.
- **ESCR event mask —** Gives the value to be placed in the Event Mask field of the ESCR to select sub-events to be counted. The parameter value column defines the documented bits with relative bit position offset starting from 0, where the absolute bit position of relative offset 0 is bit 9 of the ESCR. All undocumented bits are reserved and should be set to 0.
- **CCCR select —** Gives the value to be placed in the ESCR select field of the CCCR associated with the counter to select the ESCR to be used to define the event. This value is not the address of the ESCR; it is the number of the ESCR from the Number column in Table 20-86.
- **Event specific notes —** Gives additional information about the event, such as the name of the same or a similar event defined for the P6 family processors.
- **Can support PEBS —** Indicates if PEBS is supported for the event (only supplied for at-retirement events).
- **Requires additional MSR for tagging —** Indicates which if any additional MSRs must be programmed to count the events (only supplied for the at-retirement events).

NOTE

The performance-monitoring events found at https://perfmon-events.intel.com/ are intended to be used as guides for performance tuning. The counter values reported are not guaranteed to be absolutely accurate and should be used as a relative guide for tuning. Known discrepancies are documented where applicable.

The following procedure shows how to set up a performance counter for basic counting; that is, the counter is set up to count a specified event indefinitely, wrapping around whenever it reaches its maximum count. This procedure is continued through the following four sections.

An event to be counted can be selected as follows:

1. Select the event to be counted.
2. Select the ESCR to be used to select events to be counted from the ESCRs field.
3. Select the number of the counter to be used to count the event from the Counter Numbers Per ESCR field.
4. Determine the name of the counter and the CCCR associated with the counter, and determine the MSR addresses of the counter, CCCR, and ESCR from Table 20-86.
5. Use the WRMSR instruction to write the ESCR Event Select and ESCR Event Mask values into the appropriate fields in the ESCR. At the same time set or clear the USR and OS flags in the ESCR as desired.
6. Use the WRMSR instruction to write the CCCR Select value into the appropriate field in the CCCR.

NOTE

Typically all the fields and flags of the CCCR will be written with one WRMSR instruction; however, in this procedure, several WRMSR writes are used to more clearly demonstrate the uses of the various CCCR fields and flags.

This setup procedure is continued in the next section, Section 20.6.3.5.2, "Filtering Events."

20.6.3.5.2 Filtering Events

Each counter receives up to 4 input lines from the processor hardware from which it is counting events. The counter treats these inputs as binary inputs (input 0 has a value of 1, input 1 has a value of 2, input 3 has a value of 4, and input 3 has a value of 8). When a counter is enabled, it adds this binary input value to the counter value on each clock cycle. For each clock cycle, the value added to the counter can then range from 0 (no event) to 15.

For many events, only the 0 input line is active, so the counter is merely counting the clock cycles during which the 0 input is asserted. However, for some events two or more input lines are used. Here, the counters threshold setting can be used to filter events. The compare, complement, threshold, and edge fields control the filtering of counter increments by input value.

If the compare flag is set, then a "greater than" or a "less than or equal to" comparison of the input value vs. a threshold value can be made. The complement flag selects "less than or equal to" (flag set) or "greater than" (flag clear). The threshold field selects a threshold value of from 0 to 15. For example, if the complement flag is cleared and the threshold field is set to 6, than any input value of 7 or greater on the 4 inputs to the counter will cause the counter to be incremented by 1, and any value less than 7 will cause an increment of 0 (or no increment) of the counter. Conversely, if the complement flag is set, any value from 0 to 6 will increment the counter and any value from 7 to 15 will not increment the counter. Note that when a threshold condition has been satisfied, the input to the counter is always 1, not the input value that is presented to the threshold filter.

The edge flag provides further filtering of the counter inputs when a threshold comparison is being made. The edge flag is only active when the compare flag is set. When the edge flag is set, the resulting output from the threshold filter (a value of 0 or 1) is used as an input to the edge filter. Each clock cycle, the edge filter examines the last and current input values and sends a count to the counter only when it detects a "rising edge" event; that is, a false-to-true transition. Figure 20-50 illustrates rising edge filtering.

The following procedure shows how to configure a CCCR to filter events using the threshold filter and the edge filter. This procedure is a continuation of the setup procedure introduced in Section 20.6.3.5.1, "Selecting Events to Count."

7. (Optional) To set up the counter for threshold filtering, use the WRMSR instruction to write values in the CCCR compare and complement flags and the threshold field:
   - Set the compare flag.
   - Set or clear the complement flag for less than or equal to or greater than comparisons, respectively.
   - Enter a value from 0 to 15 in the threshold field.
8. (Optional) Select rising edge filtering by setting the CCCR edge flag.

This setup procedure is continued in the next section, Section 20.6.3.5.3, "Starting Event Counting."

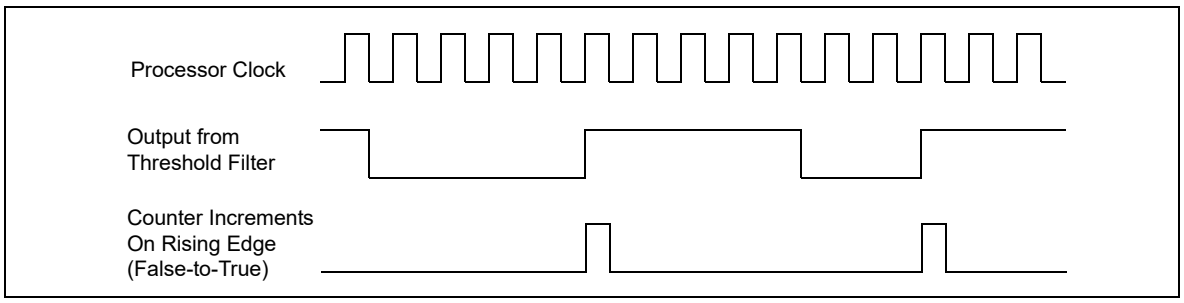

Figure 20-50. Effects of Edge Filtering

20.6.3.5.3 Starting Event Counting

Event counting by a performance counter can be initiated in either of two ways. The typical way is to set the enable flag in the counter's CCCR. Following the instruction to set the enable flag, event counting begins and continues until it is stopped (see Section 20.6.3.5.5, "Halting Event Counting").

The following procedural step shows how to start event counting. This step is a continuation of the setup procedure introduced in Section 20.6.3.5.2, "Filtering Events."

9. To start event counting, use the WRMSR instruction to set the CCCR enable flag for the performance counter.

This setup procedure is continued in the next section, Section 20.6.3.5.4, "Reading a Performance Counter's Count."

The second way that a counter can be started by using the cascade feature. Here, the overflow of one counter automatically starts its alternate counter (see Section 20.6.3.5.6, "Cascading Counters").

20.6.3.5.4 Reading a Performance Counter's Count

Performance counters can be read using either the RDPMC or RDMSR instructions. The enhanced functions of the RDPMC instruction (including fast read) are described in Section 20.6.3.2, "Performance Counters." These instructions can be used to read a performance counter while it is counting or when it is stopped.

The following procedural step shows how to read the event counter. This step is a continuation of the setup procedure introduced in Section 20.6.3.5.3, "Starting Event Counting."

10. To read a performance counters current event count, execute the RDPMC instruction with the counter number obtained from Table 20-86 used as an operand.

This setup procedure is continued in the next section, Section 20.6.3.5.5, "Halting Event Counting."

20.6.3.5.5 Halting Event Counting

After a performance counter has been started (enabled), it continues counting indefinitely. If the counter overflows (goes one count past its maximum count), it wraps around and continues counting. When the counter wraps around, it sets its OVF flag to indicate that the counter has overflowed. The OVF flag is a sticky flag that indicates that the counter has overflowed at least once since the OVF bit was last cleared.

To halt counting, the CCCR enable flag for the counter must be cleared.

The following procedural step shows how to stop event counting. This step is a continuation of the setup procedure introduced in Section 20.6.3.5.4, "Reading a Performance Counter's Count."

11. To stop event counting, execute a WRMSR instruction to clear the CCCR enable flag for the performance counter.

To halt a cascaded counter (a counter that was started when its alternate counter overflowed), either clear the Cascade flag in the cascaded counter's CCCR MSR or clear the OVF flag in the alternate counter's CCCR MSR.

20.6.3.5.6 Cascading Counters

As described in Section 20.6.3.2, "Performance Counters," eighteen performance counters are implemented in pairs. Nine pairs of counters and associated CCCRs are further organized as four blocks: BPU, MS, FLAME, and IQ (see Table 20-86). The first three blocks contain two pairs each. The IQ block contains three pairs of counters (12 through 17) with associated CCCRs (MSR_IQ_CCCR0 through MSR_IQ_CCCR5).

The first 8 counter pairs (0 through 15) can be programmed using ESCRs to detect performance monitoring events. Pairs of ESCRs in each of the four blocks allow many different types of events to be counted. The cascade flag in the CCCR MSR allows nested monitoring of events to be performed by cascading one counter to a second counter located in another pair in the same block (see Figure 20-49 for the location of the flag).

Counters 0 and 1 form the first pair in the BPU block. Either counter 0 or 1 can be programmed to detect an event via MSR_MO B_ESCR0. Counters 0 and 2 can be cascaded in any order, as can counters 1 and 3. It's possible to set up 4 counters in the same block to cascade on two pairs of independent events. The pairing described also applies to subsequent blocks. Since the IQ PUB has two extra counters, cascading operates somewhat differently if 16 and 17 are involved. In the IQ block, counter 16 can only be cascaded from counter 14 (not from 12); counter 14

cannot be cascaded from counter 16 using the CCCR cascade bit mechanism. Similar restrictions apply to counter 17.

Example 20-1. Counting Events

Assume a scenario where counter X is set up to count 200 occurrences of event A; then counter Y is set up to count 400 occurrences of event B. Each counter is set up to count a specific event and overflow to the next counter. In the above example, counter X is preset for a count of -200 and counter Y for a count of -400; this setup causes the counters to overflow on the 200th and 400th counts respectively.

Continuing this scenario, counter X is set up to count indefinitely and wraparound on overflow. This is described in the basic performance counter setup procedure that begins in Section 20.6.3.5.1, "Selecting Events to Count." Counter Y is set up with the cascade flag in its associated CCCR MSR set to 1 and its enable flag set to 0.

To begin the nested counting, the enable bit for the counter X is set. Once enabled, counter X counts until it overflows. At this point, counter Y is automatically enabled and begins counting. Thus counter X overflows after 200 occurrences of event A. Counter Y then starts, counting 400 occurrences of event B before overflowing. When performance counters are cascaded, the counter Y would typically be set up to generate an interrupt on overflow. This is described in Section 20.6.3.5.8, "Generating an Interrupt on Overflow."

The cascading counters mechanism can be used to count a single event. The counting begins on one counter then continues on the second counter after the first counter overflows. This technique doubles the number of event counts that can be recorded, since the contents of the two counters can be added together.

20.6.3.5.7 EXTENDED CASCADING

Extended cascading is a model-specific feature in the Intel NetBurst microarchitecture with CPUID DisplayFamily_DisplayModel 0F_02, 0F_03, 0F_04, 0F_06. This feature uses bit 11 in CCCRs associated with the IQ block. See Table 20-88.

Table 20-88. CCR Names and Bit Positions

CCCR Name:Bit Position	Bit Name	Description
MSR_IQ_CCCR1|2:11	Reserved	
MSR_IQ_CCCR0:11	CASCNT4INT00	Allow counter 4 to cascade into counter 0
MSR_IQ_CCCR3:11	CASCNT5INT03	Allow counter 5 to cascade into counter 3
MSR_IQ_CCCR4:11	CASCNT5INT04	Allow counter 5 to cascade into counter 4
MSR_IQ_CCCR5:11	CASCNT4INT05	Allow counter 4 to cascade into counter 5

The extended cascading feature can be adapted to the Interrupt based sampling usage model for performance monitoring. However, it is known that performance counters do not generate PMI in cascade mode or extended cascade mode due to an erratum. This erratum applies to processors with CPUID DisplayFamily_DisplayModel signature of 0F_02. For processors with CPUID DisplayFamily_DisplayModel signature of 0F_00 and 0F_01, the erratum applies to processors with stepping encoding greater than 09H.

Counters 16 and 17 in the IQ block are frequently used in processor event-based sampling or at-retirement counting of events indicating a stalled condition in the pipeline. Neither counter 16 or 17 can initiate the cascading of counter pairs using the cascade bit in a CCCR.

Extended cascading permits performance monitoring tools to use counters 16 and 17 to initiate cascading of two counters in the IQ block. Extended cascading from counter 16 and 17 is conceptually similar to cascading other counters, but instead of using CASCADE bit of a CCCR, one of the four CASCNTxINTOy bits is used.

Example 20-2. Scenario for Extended Cascading

A usage scenario for extended cascading is to sample instructions retired on logical processor 1 after the first 4096 instructions retired on logical processor 0. A procedure to program extended cascading in this scenario is outlined below:

1. Write the value 0 to counter 12.
2. Write the value 04000603H to MSR_CRU_ESCR0 (corresponding to selecting the NBOGNTAG and NBOGTAG event masks with qualification restricted to logical processor 1).
3. Write the value 04038800H to MSR_IQ_CCCR0. This enables CASCNT4INTO0 and OVF_PMI. An ISR can sample on instruction addresses in this case (do not set ENABLE, or CASCADE).
4. Write the value FFFFF000H into counter 16.1.
5. Write the value 0400060CH to MSR_CRU_ESCR2 (corresponding to selecting the NBOGNTAG and NBOGTAG event masks with qualification restricted to logical processor 0).
6. Write the value 00039000H to MSR_IQ_CCCR4 (set ENABLE bit, but not OVF_PMI).

Another use for cascading is to locate stalled execution in a multithreaded application. Assume MOB replays in thread B cause thread A to stall. Getting a sample of the stalled execution in this scenario could be accomplished by:

1. Set up counter B to count MOB replays on thread B.
2. Set up counter A to count resource stalls on thread A; set its force overflow bit and the appropriate CASCNTx-INTOy bit.
3. Use the performance monitoring interrupt to capture the program execution data of the stalled thread.

20.6.3.5.8 Generating an Interrupt on Overflow

Any performance counter can be configured to generate a performance monitor interrupt (PMI) if the counter overflows. The PMI interrupt service routine can then collect information about the state of the processor or program when overflow occurred. This information can then be used with a tool like the Intel® VTune™ Performance Analyzer to analyze and tune program performance.

To enable an interrupt on counter overflow, the OVR_PMI flag in the counter's associated CCCR MSR must be set. When overflow occurs, a PMI is generated through the local APIC. (Here, the performance counter entry in the local vector table [LVT] is set up to deliver the interrupt generated by the PMI to the processor.)

The PMI service routine can use the OVF flag to determine which counter overflowed when multiple counters have been configured to generate PMIs. Also, note that these processors mask PMIs upon receiving an interrupt. Clear this condition before leaving the interrupt handler.

When generating interrupts on overflow, the performance counter being used should be preset to value that will cause an overflow after a specified number of events are counted plus 1. The simplest way to select the preset value is to write a negative number into the counter, as described in Section 20.6.3.5.6, "Cascading Counters." Here, however, if an interrupt is to be generated after 100 event counts, the counter should be preset to minus 100 plus 1 (-100 + 1), or -99. The counter will then overflow after it counts 99 events and generate an interrupt on the next (100th) event counted. The difference of 1 for this count enables the interrupt to be generated immediately after the selected event count has been reached, instead of waiting for the overflow to be propagation through the counter.

Because of latency in the microarchitecture between the generation of events and the generation of interrupts on overflow, it is sometimes difficult to generate an interrupt close to an event that caused it. In these situations, the FORCE_OVF flag in the CCCR can be used to improve reporting. Setting this flag causes the counter to overflow on every counter increment, which in turn triggers an interrupt after every counter increment.

20.6.3.5.9 Counter Usage Guideline

There are some instances where the user must take care to configure counting logic properly, so that it is not powered down. To use any ESCR, even when it is being used just for tagging, (any) one of the counters that the particular ESCR (or its paired ESCR) can be connected to should be enabled. If this is not done, 0 counts may result. Likewise, to use any counter, there must be some event selected in a corresponding ESCR (other than no_event, which generally has a select value of 0).

20.6.3.6 At-Retirement Counting

At-retirement counting provides a means counting only events that represent work committed to architectural state and ignoring work that was performed speculatively and later discarded.

One example of this speculative activity is branch prediction. When a branch misprediction occurs, the results of instructions that were decoded and executed down the mispredicted path are canceled. If a performance counter was set up to count all executed instructions, the count would include instructions whose results were canceled as well as those whose results committed to architectural state.

To provide finer granularity in event counting in these situations, the performance monitoring facilities provided in the Pentium 4 and Intel Xeon processors provide a mechanism for tagging events and then counting only those tagged events that represent committed results. This mechanism is called "at-retirement counting."

There are predefined at-retirement events and event metrics that can be used to for tagging events when using at retirement counting. The following terminology is used in describing at-retirement counting:

- **Bogus, non-bogus, retire —** In at-retirement event descriptions, the term "bogus" refers to instructions or μops that must be canceled because they are on a path taken from a mispredicted branch. The terms "retired" and "non-bogus" refer to instructions or μops along the path that results in committed architectural state changes as required by the program being executed. Thus instructions and μops are either bogus or non-bogus, but not both. Several of the Pentium 4 and Intel Xeon processors' performance monitoring events (such as, Instruction_Retired and Uops_Retired) can count instructions or μops that are retired based on the characterization of bogus" versus non-bogus.
- **Tagging —** Tagging is a means of marking μops that have encountered a particular performance event so they can be counted at retirement. During the course of execution, the same event can happen more than once per μop and a direct count of the event would not provide an indication of how many μops encountered that event.

  The tagging mechanisms allow a μop to be tagged once during its lifetime and thus counted once at retirement. The retired suffix is used for performance metrics that increment a count once per μop, rather than once per event. For example, a μop may encounter a cache miss more than once during its life time, but a "Miss Retired" metric (that counts the number of retired μops that encountered a cache miss) will increment only once for that μop. A "Miss Retired" metric would be useful for characterizing the performance of the cache hierarchy for a particular instruction sequence. Details of various performance metrics and how these can be constructed using the Pentium 4 and Intel Xeon processors performance events are provided in the *Intel Pentium 4 Processor Optimization Reference Manual* (see Section 1.4, "Related Literature").
- **Replay —** To maximize performance for the common case, the Intel NetBurst microarchitecture aggressively schedules μops for execution before all the conditions for correct execution are guaranteed to be satisfied. In the event that all of these conditions are not satisfied, μops must be reissued. The mechanism that the Pentium 4 and Intel Xeon processors use for this reissuing of μops is called replay. Some examples of replay causes are cache misses, dependence violations, and unforeseen resource constraints. In normal operation, some number of replays is common and unavoidable. An excessive number of replays is an indication of a performance problem.
- **Assist —** When the hardware needs the assistance of microcode to deal with some event, the machine takes an assist. One example of this is an underflow condition in the input operands of a floating-point operation. The hardware must internally modify the format of the operands in order to perform the computation. Assists clear the entire machine of μops before they begin and are costly.

20.6.3.6.1 Using At-Retirement Counting

Processors based on Intel NetBurst microarchitecture allow counting both events and μops that encountered a specified event. For a subset of the at-retirement events, a μop may be tagged when it encounters that event. The tagging mechanisms can be used in Interrupt-based event sampling, and a subset of these mechanisms can be used in PEBS. There are four independent tagging mechanisms, and each mechanism uses a different event to count μops tagged with that mechanism:

- **Front-end tagging —** This mechanism pertains to the tagging of μops that encountered front-end events (for example, trace cache and instruction counts) and are counted with the Front_end_event event.
- **Execution tagging —** This mechanism pertains to the tagging of μops that encountered execution events (for example, instruction types) and are counted with the Execution_Event event.

- **Replay tagging —** This mechanism pertains to tagging of μops whose retirement is replayed (for example, a cache miss) and are counted with the Replay_event event. Branch mispredictions are also tagged with this mechanism.
- **No tags —** This mechanism does not use tags. It uses the Instr_retired and the Uops_ retired events.

Each tagging mechanism is independent from all others; that is, a μop that has been tagged using one mechanism will not be detected with another mechanism's tagged-μop detector. For example, if μops are tagged using the front-end tagging mechanisms, the Replay_event will not count those as tagged μops unless they are also tagged using the replay tagging mechanism. However, execution tags allow up to four different types of μops to be counted at retirement through execution tagging.

The independence of tagging mechanisms does not hold when using PEBS. When using PEBS, only one tagging mechanism should be used at a time.

Certain kinds of μops that cannot be tagged, including I/O, uncacheable and locked accesses, returns, and far transfers.

There are performance monitoring events that support at-retirement counting: specifically the Front_end_event, Execution_event, Replay_event, Inst_retired, and Uops_retired events. The following sections describe the tagging mechanisms for using these events to tag μop and count tagged μops.

20.6.3.6.2 Tagging Mechanism for Front_end_event

The Front_end_event counts μops that have been tagged as encountering any of the following events:

- **μop decode events —** Tagging μops for μop decode events requires specifying bits in the ESCR associated with the performance-monitoring event, Uop_type.
- **Trace cache events —** Tagging μops for trace cache events may require specifying certain bits in the MSR_TC_PRECISE_EVENT MSR.

The MSRs that are supported by the front-end tagging mechanism must be set and one or both of the NBOGUS and BOGUS bits in the Front_end_event event mask must be set to count events. None of the events currently supported requires the use of the MSR_TC_PRECISE_EVENT MSR.

20.6.3.6.3 Tagging Mechanism For Execution_event

The execution tagging mechanism differs from other tagging mechanisms in how it causes tagging. One *upstream* ESCR is used to specify an event to detect and to specify a tag value (bits 5 through 8) to identify that event. A second *downstream* ESCR is used to detect μops that have been tagged with that tag value identifier using Execution_event for the event selection.

The upstream ESCR that counts the event must have its tag enable flag (bit 4) set and must have an appropriate tag value mask entered in its tag value field. The 4-bit tag value mask specifies which of tag bits should be set for a particular μop. The value selected for the tag value should coincide with the event mask selected in the downstream ESCR. For example, if a tag value of 1 is set, then the event mask of NBOGUS0 should be enabled, correspondingly in the downstream ESCR. The downstream ESCR detects and counts tagged μops. The normal (not tag value) mask bits in the downstream ESCR specify which tag bits to count. If any one of the tag bits selected by the mask is set, the related counter is incremented by one. The tag enable and tag value bits are irrelevant for the downstream ESCR used to select the Execution_event.

The four separate tag bits allow the user to simultaneously but distinctly count up to four execution events at retirement. (This applies for interrupt-based event sampling. There are additional restrictions for PEBS as noted in Section 20.6.3.8.3, "Setting Up the PEBS Buffer.") It is also possible to detect or count combinations of events by setting multiple tag value bits in the upstream ESCR or multiple mask bits in the downstream ESCR. For example, use a tag value of 3H in the upstream ESCR and use NBOGUS0/NBOGUS1 in the downstream ESCR event mask.

20.6.3.7 Tagging Mechanism for Replay_event

The replay mechanism enables tagging of μops for a subset of all replays before retirement. Use of the replay mechanism requires selecting the type of μop that may experience the replay in the MSR_PEBS_MATRIX_VERT MSR and selecting the type of event in the MSR_PEBS_ENABLE MSR. Replay tagging must also be enabled with the UOP_Tag flag (bit 24) in the MSR_PEBS_ENABLE MSR.

The replay tags defined in Table A-5 also enable Processor Event-Based Sampling (PEBS, see Section 18.4.9). Each of these replay tags can also be used in normal sampling by not setting Bit 24 nor Bit 25 in IA_32_PEBS_ENABLE_MSR. Each of these metrics requires that the Replay_Event be used to count the tagged μops.

20.6.3.8 Processor Event-Based Sampling (PEBS)

The debug store (DS) mechanism in processors based on Intel NetBurst microarchitecture allow two types of information to be collected for use in debugging and tuning programs: PEBS records and BTS records. See Section 18.4.5, "Branch Trace Store (BTS)," for a description of the BTS mechanism.

PEBS permits the saving of precise architectural information associated with one or more performance events in the precise event records buffer, which is part of the DS save area (see Section 18.4.9, "BTS and DS Save Area"). To use this mechanism, a counter is configured to overflow after it has counted a preset number of events. After the counter overflows, the processor copies the current state of the general-purpose and EFLAGS registers and instruction pointer into a record in the precise event records buffer. The processor then resets the count in the performance counter and restarts the counter. When the precise event records buffer is nearly full, an interrupt is generated, allowing the precise event records to be saved. A circular buffer is not supported for precise event records.

PEBS is supported only for a subset of the at-retirement events: Execution_event, Front_end_event, and Replay_event. Also, PEBS can only be carried out using the one performance counter, the MSR_IQ_COUNTER4 MSR.

In processors based on Intel Core microarchitecture, a similar PEBS mechanism is also supported using IA32_PMC0 and IA32_PERFEVTSEL0 MSRs (See Section 20.6.2.4).

20.6.3.8.1 Detection of the Availability of the PEBS Facilities

The DS feature flag (bit 21) returned by the CPUID instruction indicates (when set) the availability of the DS mechanism in the processor, which supports the PEBS (and BTS) facilities. When this bit is set, the following PEBS facilities are available:

- The PEBS_UNAVAILABLE flag in the IA32_MISC_ENABLE MSR indicates (when clear) the availability of the PEBS facilities, including the MSR_PEBS_ENABLE MSR.
- The enable PEBS flag (bit 24) in the MSR_PEBS_ENABLE MSR allows PEBS to be enabled (set) or disabled (clear).
- The IA32_DS_AREA MSR can be programmed to point to the DS save area.

20.6.3.8.2 Setting Up the DS Save Area

Section 18.4.9.2, "Setting Up the DS Save Area," describes how to set up and enable the DS save area. This procedure is common for PEBS and BTS.

20.6.3.8.3 Setting Up the PEBS Buffer

Only the MSR_IQ_COUNTER4 performance counter can be used for PEBS. Use the following procedure to set up the processor and this counter for PEBS:

1. Set up the precise event buffering facilities. Place values in the precise event buffer base, precise event index, precise event absolute maximum, and precise event interrupt threshold, and precise event counter reset fields of the DS buffer management area (see Figure 18-5) to set up the precise event records buffer in memory.
2. Enable PEBS. Set the Enable PEBS flag (bit 24) in MSR_PEBS_ENABLE MSR.
3. Set up the MSR_IQ_COUNTER4 performance counter and its associated CCCR and one or more ESCRs for PEBS.

20.6.3.8.4 Writing a PEBS Interrupt Service Routine

The PEBS facilities share the same interrupt vector and interrupt service routine (called the DS ISR) with the non-precise event-based sampling and BTS facilities. To handle PEBS interrupts, PEBS handler code must be included in the DS ISR. See Section 18.4.9.5, "Writing the DS Interrupt Service Routine," for guidelines for writing the DS ISR.

20.6.3.8.5 Other DS Mechanism Implications

The DS mechanism is not available in the SMM. It is disabled on transition to the SMM mode. Similarly the DS mechanism is disabled on the generation of a machine check exception and is cleared on processor RESET and INIT.

The DS mechanism is available in real address mode.

20.6.3.9 Operating System Implications

The DS mechanism can be used by the operating system as a debugging extension to facilitate failure analysis. When using this facility, a 25 to 30 times slowdown can be expected due to the effects of the trace store occurring on every taken branch.

Depending upon intended usage, the instruction pointers that are part of the branch records or the PEBS records need to have an association with the corresponding process. One solution requires the ability for the DS specific operating system module to be chained to the context switch. A separate buffer can then be maintained for each process of interest and the MSR pointing to the configuration area saved and setup appropriately on each context switch.

If the BTS facility has been enabled, then it must be disabled and state stored on transition of the system to a sleep state in which processor context is lost. The state must be restored on return from the sleep state.

It is required that an interrupt gate be used for the DS interrupt as opposed to a trap gate to prevent the generation of an endless interrupt loop.

Pages that contain buffers must have mappings to the same physical address for all processes/logical processors, such that any change to CR3 will not change DS addresses. If this requirement cannot be satisfied (that is, the feature is enabled on a per thread/process basis), then the operating system must ensure that the feature is enabled/disabled appropriately in the context switch code.

20.6.4 Performance Monitoring and Intel Hyper-Threading Technology in Processors Based on Intel NetBurst® Microarchitecture

The performance monitoring capability of processors based on Intel NetBurst microarchitecture and supporting Intel Hyper-Threading Technology is similar to that described in Section 20.6.3. However, the capability is extended so that:

- Performance counters can be programmed to select events qualified by logical processor IDs.
- Performance monitoring interrupts can be directed to a specific logical processor within the physical processor.

The sections below describe performance counters, event qualification by logical processor ID, and special purpose bits in ESCRs/CCCRs. They also describe MSR_PEBS_ENABLE, MSR_PEBS_MATRIX_VERT, and MSR_TC_PRECISE_EVENT.

20.6.4.1 ESCR MSRs

Figure 20-51 shows the layout of an ESCR MSR in processors supporting Intel Hyper-Threading Technology.

The functions of the flags and fields are as follows:

- **T1_USR flag, bit 0 —** When set, events are counted when thread 1 (logical processor 1) is executing at a current privilege level (CPL) of 1, 2, or 3. These privilege levels are generally used by application code and unprotected operating system code.

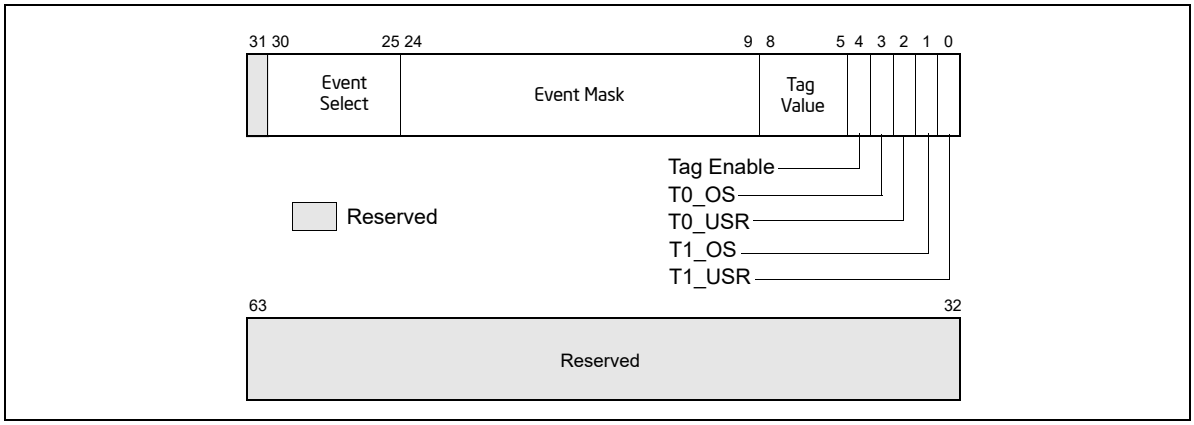

Figure 20-51. Event Selection Control Register (ESCR) for the Pentium 4 Processor, Intel® Xeon® Processor and Intel® Xeon® Processor MP Supporting Hyper-Threading Technology

- **T1_OS flag, bit 1 —** When set, events are counted when thread 1 (logical processor 1) is executing at CPL of 0. This privilege level is generally reserved for protected operating system code. (When both the T1_OS and T1_USR flags are set, thread 1 events are counted at all privilege levels.)
- **T0_USR flag, bit 2 —** When set, events are counted when thread 0 (logical processor 0) is executing at a CPL of 1, 2, or 3.
- **T0_OS flag, bit 3 —** When set, events are counted when thread 0 (logical processor 0) is executing at CPL of 0. (When both the T0_OS and T0_USR flags are set, thread 0 events are counted at all privilege levels.)
- **Tag enable, bit 4 —** When set, enables tagging of μops to assist in at-retirement event counting; when clear, disables tagging. See Section 20.6.3.6, "At-Retirement Counting."
- **Tag value field, bits 5 through 8 —** Selects a tag value to associate with a μop to assist in at-retirement event counting.
- **Event mask field, bits 9 through 24 —** Selects events to be counted from the event class selected with the event select field.
- **Event select field, bits 25 through 30) —** Selects a class of events to be counted. The events within this class that are counted are selected with the event mask field.

The T0_OS and T0_USR flags and the T1_OS and T1_USR flags allow event counting and sampling to be specified for a specific logical processor (0 or 1) within an Intel Xeon processor MP (See also: Section 9.4.5, "Identifying Logical Processors in an MP System," in the *Intel® 64 and IA-32 Architectures Software Developer's Manual, Volume 3A*).

Not all performance monitoring events can be detected within an Intel Xeon processor MP on a per logical processor basis (see Section 20.6.4.4, "Performance Monitoring Events"). Some sub-events (specified by an event mask bits) are counted or sampled without regard to which logical processor is associated with the detected event.

20.6.4.2 CCCR MSRs

Figure 20-52 shows the layout of a CCCR MSR in processors supporting Intel Hyper-Threading Technology. The functions of the flags and fields are as follows:

- **Enable flag, bit 12 —** When set, enables counting; when clear, the counter is disabled. This flag is cleared on reset
- **ESCR select field, bits 13 through 15 —** Identifies the ESCR to be used to select events to be counted with the counter associated with the CCCR.
- **Active thread field, bits 16 and 17 —** Enables counting depending on which logical processors are active (executing a thread). This field enables filtering of events based on the state (active or inactive) of the logical processors. The encodings of this field are as follows:

  00 — None. Count only when neither logical processor is active.

01 — Single. Count only when one logical processor is active (either 0 or 1).

10 — Both. Count only when both logical processors are active.

11 — Any. Count when either logical processor is active.

A halted logical processor or a logical processor in the "wait for SIPI" state is considered inactive.

- **Compare flag, bit 18 —** When set, enables filtering of the event count; when clear, disables filtering. The filtering method is selected with the threshold, complement, and edge flags.

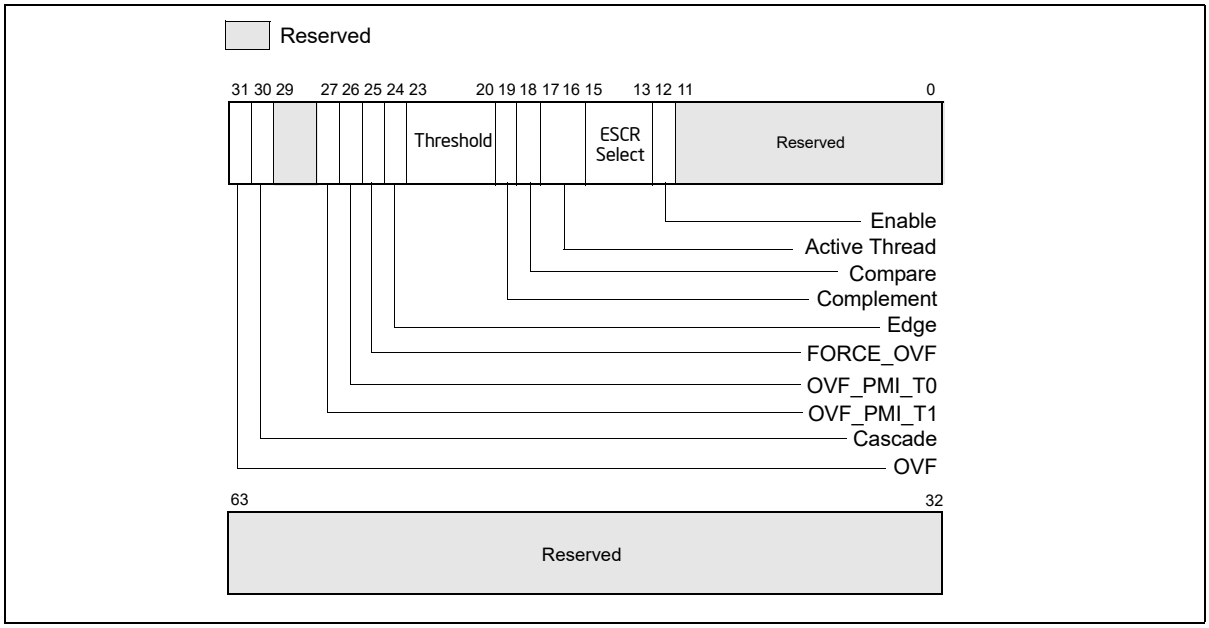

Figure 20-52. Counter Configuration Control Register (CCCR)

- **Complement flag, bit 19 —** Selects how the incoming event count is compared with the threshold value. When set, event counts that are less than or equal to the threshold value result in a single count being delivered to the performance counter; when clear, counts greater than the threshold value result in a count being delivered to the performance counter (see Section 20.6.3.5.2, "Filtering Events"). The compare flag is not active unless the compare flag is set.
- **Threshold field, bits 20 through 23 —** Selects the threshold value to be used for comparisons. The processor examines this field only when the compare flag is set, and uses the complement flag setting to determine the type of threshold comparison to be made. The useful range of values that can be entered in this field depend on the type of event being counted (see Section 20.6.3.5.2, "Filtering Events").
- **Edge flag, bit 24 —** When set, enables rising edge (false-to-true) edge detection of the threshold comparison output for filtering event counts; when clear, rising edge detection is disabled. This flag is active only when the compare flag is set.
- **FORCE_OVF flag, bit 25 —** When set, forces a counter overflow on every counter increment; when clear, overflow only occurs when the counter actually overflows.
- **OVF_PMI_T0 flag, bit 26 —** When set, causes a performance monitor interrupt (PMI) to be sent to logical processor 0 when the counter overflows occurs; when clear, disables PMI generation for logical processor 0. Note that the PMI is generate on the next event count after the counter has overflowed.
- **OVF_PMI_T1 flag, bit 27 —** When set, causes a performance monitor interrupt (PMI) to be sent to logical processor 1 when the counter overflows occurs; when clear, disables PMI generation for logical processor 1. Note that the PMI is generate on the next event count after the counter has overflowed.
- **Cascade flag, bit 30 —** When set, enables counting on one counter of a counter pair when its alternate counter in the other the counter pair in the same counter group overflows (see Section 20.6.3.2, "Performance Counters," for further details); when clear, disables cascading of counters.

- **OVF flag, bit 31 —** Indicates that the counter has overflowed when set. This flag is a sticky flag that must be explicitly cleared by software.

20.6.4.3 IA32_PEBS_ENABLE MSR

In a processor supporting Intel Hyper-Threading Technology and based on the Intel NetBurst microarchitecture, PEBS is enabled and qualified with two bits in the MSR_PEBS_ENABLE MSR: bit 25 (ENABLE_PEBS_MY_THR) and 26 (ENABLE_PEBS_OTH_THR) respectively. These bits do not explicitly identify a specific logical processor by logic processor ID(T0 or T1); instead, they allow a software agent to enable PEBS for subsequent threads of execution on the same logical processor on which the agent is running ("my thread") or for the other logical processor in the physical package on which the agent is not running ("other thread").

PEBS is supported for only a subset of the at-retirement events: Execution_event, Front_end_event, and Replay_event. Also, PEBS can be carried out only with two performance counters: MSR_IQ_CCCR4 (MSR address 370H) for logical processor 0 and MSR_IQ_CCCR5 (MSR address 371H) for logical processor 1.

Performance monitoring tools should use a processor affinity mask to bind the kernel mode components that need to modify the ENABLE_PEBS_MY_THR and ENABLE_PEBS_OTH_THR bits in the MSR_PEBS_ENABLE MSR to a specific logical processor. This is to prevent these kernel mode components from migrating between different logical processors due to OS scheduling.

20.6.4.4 Performance Monitoring Events

When Intel Hyper-Threading Technology is active, many performance monitoring events can be can be qualified by the logical processor ID, which corresponds to bit 0 of the initial APIC ID. This allows for counting an event in any or all of the logical processors. However, not all the events have this logic processor specificity, or thread specificity.

Here, each event falls into one of two categories:

- **Thread specific (TS) —** The event can be qualified as occurring on a specific logical processor.
- **Thread independent (TI) —** The event cannot be qualified as being associated with a specific logical processor.

If for example, a TS event occurred in logical processor T0, the counting of the event (as shown in Table 20-89) depends only on the setting of the T0_USR and T0_OS flags in the ESCR being used to set up the event counter. The T1_USR and T1_OS flags have no effect on the count.

Table 20-89. Effect of Logical Processor and CPL Qualification for Logical-Processor-Specific (TS) Events

	T1_OS/T1_USR = 00	T1_OS/T1_USR = 01	T1_OS/T1_USR = 11	T1_OS/T1_USR = 10
T0_OS/T0_USR = 00	Zero count	Counts while T1 in USR	Counts while T1 in OS or USR	Counts while T1 in OS
T0_OS/T0_USR = 01	Counts while T0 in USR	Counts while T0 in USR or T1 in USR	Counts while (a) T0 in USR or (b) T1 in OS or (c) T1 in USR	Counts while (a) T0 in OS or (b) T1 in OS
T0_OS/T0_USR = 11	Counts while T0 in OS or USR	Counts while (a) T0 in OS or (b) T0 in USR or (c) T1 in USR	Counts irrespective of CPL, T0, T1	Counts while (a) T0 in OS or (b) or T0 in USR or (c) T1 in OS
T0_OS/T0_USR = 10	Counts T0 in OS	Counts T0 in OS or T1 in USR	Counts while (a)T0 in Os or (b) T1 in OS or (c) T1 in USR	Counts while (a) T0 in OS or (b) T1 in OS

When a bit in the event mask field is TI, the effect of specifying bit-0-3 of the associated ESCR are described in Table 15-6. For events that are marked as TI, the effect of selectively specifying T0_USR, T0_OS, T1_USR, T1_OS bits is shown in Table 20-90.

Table 20-90. Effect of Logical Processor and CPL Qualification for Non-logical-Processor-specific (TI) Events

	T1_OS/T1_USR = 00	T1_OS/T1_USR = 01	T1_OS/T1_USR = 11	T1_OS/T1_USR = 10
T0_OS/T0_USR = 00	Zero count	Counts while (a) T0 in USR or (b) T1 in USR	Counts irrespective of CPL, T0, T1	Counts while (a) T0 in OS or (b) T1 in OS
T0_OS/T0_USR = 01	Counts while (a) T0 in USR or (b) T1 in USR	Counts while (a) T0 in USR or (b) T1 in USR	Counts irrespective of CPL, T0, T1	Counts irrespective of CPL, T0, T1
T0_OS/T0_USR = 11	Counts irrespective of CPL, T0, T1	Counts irrespective of CPL, T0, T1	Counts irrespective of CPL, T0, T1	Counts irrespective of CPL, T0, T1
T0_OS/T0_USR = 0	Counts while (a) T0 in OS or (b) T1 in OS	Counts irrespective of CPL, T0, T1	Counts irrespective of CPL, T0, T1	Counts while (a) T0 in OS or (b) T1 in OS

20.6.4.5 Counting Clocks on systems with Intel® Hyper-Threading Technology in Processors Based on Intel NetBurst® Microarchitecture

20.6.4.5.1 Non-Halted Clockticks

Use the following procedure to program ESCRs and CCCRs to obtain non-halted clockticks on processors based on Intel NetBurst microarchitecture:

1. Select an ESCR for the global_power_events and specify the RUNNING sub-event mask and the desired T0_OS/T0_USR/T1_OS/T1_USR bits for the targeted processor.
2. Select an appropriate counter.
3. Enable counting in the CCCR for that counter by setting the enable bit.

20.6.4.5.2 Non-Sleep Clockticks

Performance monitoring counters can be configured to count clockticks whenever the performance monitoring hardware is not powered-down. To count Non-sleep Clockticks with a performance-monitoring counter, do the following:

1. Select one of the 18 counters.
2. Select any of the ESCRs whose events the selected counter can count. Set its event select to anything other than "no_event"; the counter may be disabled if this is not done.
3. Turn threshold comparison on in the CCCR by setting the compare bit to "1".
4. Set the threshold to "15" and the complement to "1" in the CCCR. Since no event can exceed this threshold, the threshold condition is met every cycle and the counter counts every cycle. Note that this overrides any qualification (e.g., by CPL) specified in the ESCR.
5. Enable counting in the CCCR for the counter by setting the enable bit.

In most cases, the counts produced by the non-halted and non-sleep metrics are equivalent if the physical package supports one logical processor and is not placed in a power-saving state. Operating systems may execute an HLT instruction and place a physical processor in a power-saving state.

On processors that support Intel Hyper-Threading Technology (Intel HT Technology), each physical package can support two or more logical processors. Current implementation of Intel HT Technology provides two logical processors for each physical processor. While both logical processors can execute two threads simultaneously, one logical processor may halt to allow the other logical processor to execute without sharing execution resources between two logical processors.

Non-halted Clockticks can be set up to count the number of processor clock cycles for each logical processor whenever the logical processor is not halted (the count may include some portion of the clock cycles for that logical processor to complete a transition to a halted state). Physical processors that support Intel HT Technology enter into a power-saving state if all logical processors halt.

The Non-sleep Clockticks mechanism uses a filtering mechanism in CCCRs. The mechanism will continue to increment as long as one logical processor is not halted or in a power-saving state. Applications may cause a processor to enter into a power-saving state by using an OS service that transfers control to an OS's idle loop. The idle loop then may place the processor into a power-saving state after an implementation-dependent period if there is no work for the processor.

20.6.5 Performance Monitoring and Dual-Core Technology

The performance monitoring capability of dual-core processors duplicates the microarchitectural resources of a single-core processor implementation. Each processor core has dedicated performance monitoring resources.

In the case of Pentium D processor, each logical processor is associated with dedicated resources for performance monitoring. In the case of Pentium processor Extreme edition, each processor core has dedicated resources, but two logical processors in the same core share performance monitoring resources (see Section 20.6.4, "Performance Monitoring and Intel Hyper-Threading Technology in Processors Based on Intel NetBurst® Microarchitecture").

20.6.6 Performance Monitoring on 64-bit Intel Xeon Processor MP with Up to 8-MByte L3 Cache

The 64-bit Intel Xeon processor MP with up to 8-MByte L3 cache has a CPUID signature of family [0FH], model [03H or 04H]. Performance monitoring capabilities available to Pentium 4 and Intel Xeon processors with the same values (see Section 20.1 and Section 20.6.4) apply to the 64-bit Intel Xeon processor MP with an L3 cache.

The level 3 cache is connected between the system bus and IOQ through additional control logic. See Figure 20-53.

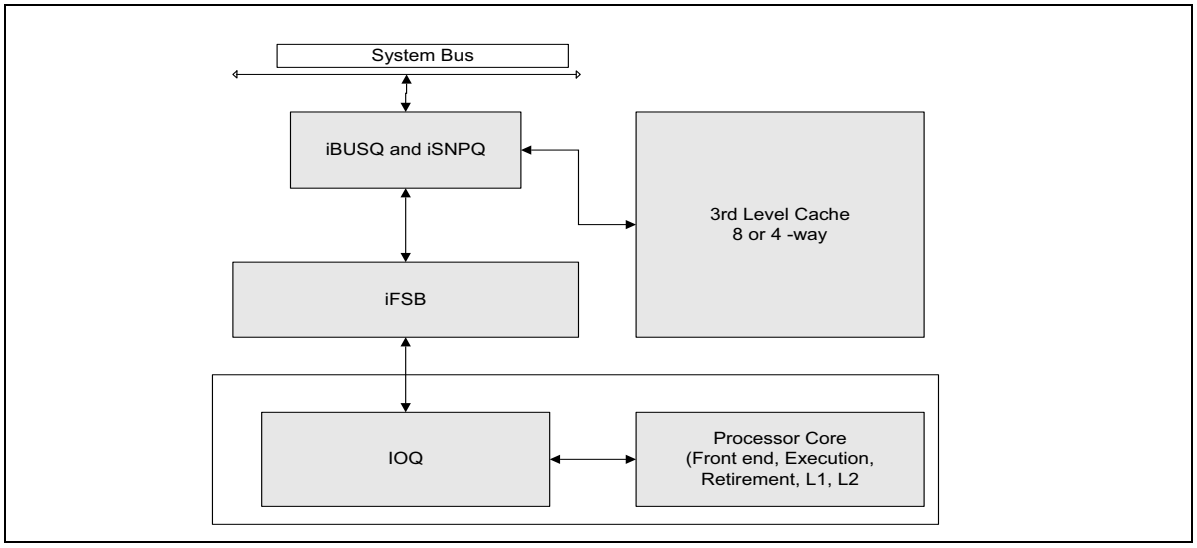

Figure 20-53. Block Diagram of 64-bit Intel® Xeon® Processor MP with 8-MByte L3

Additional performance monitoring capabilities and facilities unique to 64-bit Intel Xeon processor MP with an L3 cache are described in this section. The facility for monitoring events consists of a set of dedicated model-specific registers (MSRs), each dedicated to a specific event. Programming of these MSRs requires using RDMSR/WRMSR instructions with 64-bit values.

The lower 32-bits of the MSRs at addresses 107CC through 107D3 are treated as 32 bit performance counter registers. These performance counters can be accessed using RDPMC instruction with the index starting from 18 through 25. The EDX register returns zero when reading these 8 PMCs.

The performance monitoring capabilities consist of four events. These are:

- **IBUSQ event —** This event detects the occurrence of micro-architectural conditions related to the iBUSQ unit. It provides two MSRs: MSR_IFSB_IBUSQ0 and MSR_IFSB_IBUSQ1. Configure sub-event qualification and enable/disable functions using the high 32 bits of these MSRs. The low 32 bits act as a 32-bit event counter. Counting starts after software writes a non-zero value to one or more of the upper 32 bits. See Figure 20-54.

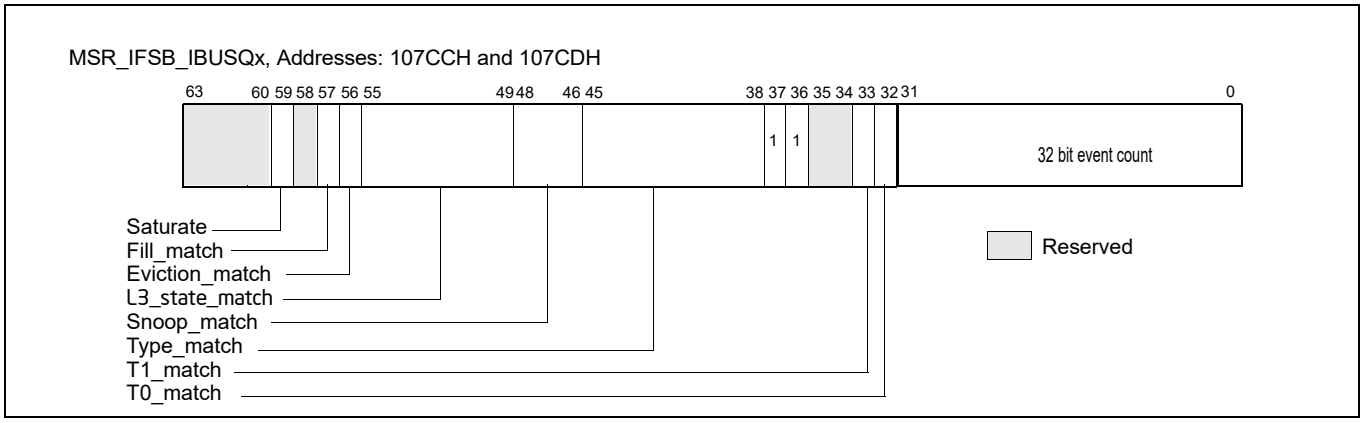

Figure 20-54. MSR_IFSB_IBUSQx, Addresses: 107CCH and 107CDH

- **ISNPQ event —** This event detects the occurrence of microarchitectural conditions related to the iSNPQ unit. It provides two MSRs: MSR_IFSB_ISNPQ0 and MSR_IFSB_ISNPQ1. Configure sub-event qualifications and enable/disable functions using the high 32 bits of the MSRs. The low 32-bits act as a 32-bit event counter. Counting starts after software writes a non-zero value to one or more of the upper 32-bits. See Figure 20-55.

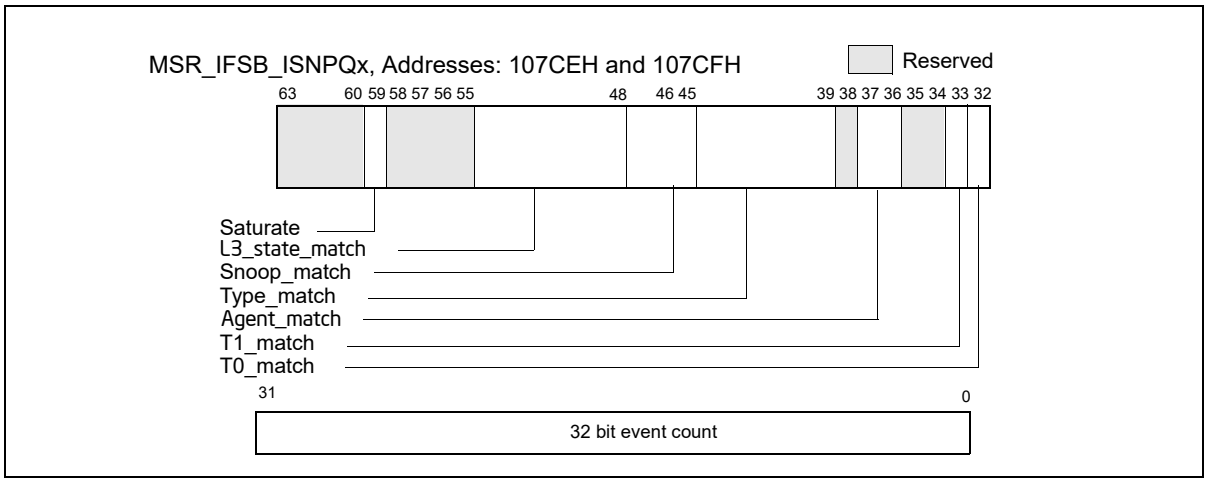

Figure 20-55. MSR_IFSB_ISNPQx, Addresses: 107CEH and 107CFH

- **EFSB event —** This event can detect the occurrence of micro-architectural conditions related to the iFSB unit or system bus. It provides two MSRs: MSR_EFSB_DRDY0 and MSR_EFSB_DRDY1. Configure sub-event qualifications and enable/disable functions using the high 32 bits of the 64-bit MSR. The low 32-bit act as a 32-bit event counter. Counting starts after software writes a non-zero value to one or more of the qualification bits in the upper 32-bits of the MSR. See Figure 20-56.

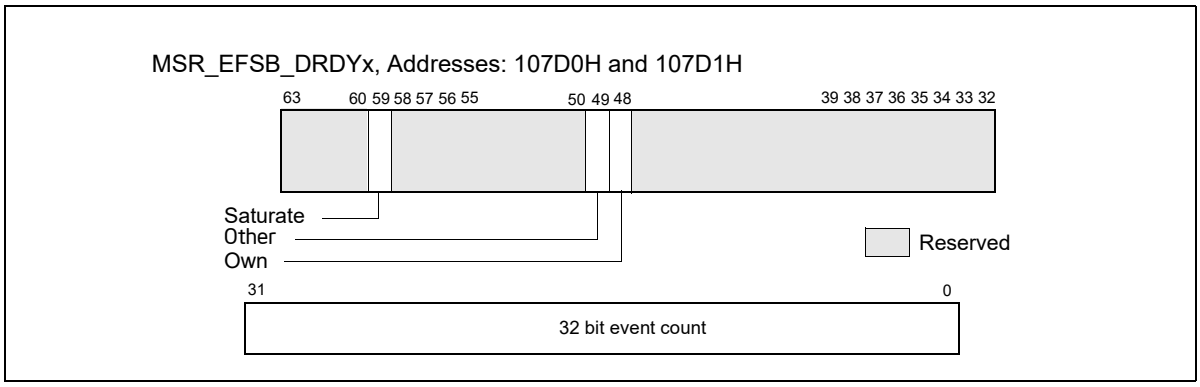

Figure 20-56. MSR_EFSB_DRDYx, Addresses: 107D0H and 107D1H

- **IBUSQ Latency event —** This event accumulates weighted cycle counts for latency measurement of transactions in the iBUSQ unit. The count is enabled by setting MSR_IFSB_CTRL6[bit 26] to 1; the count freezes after software sets MSR_IFSB_CTRL6[bit 26] to 0. MSR_IFSB_CNTR7 acts as a 64-bit event counter for this event. See Figure 20-57.

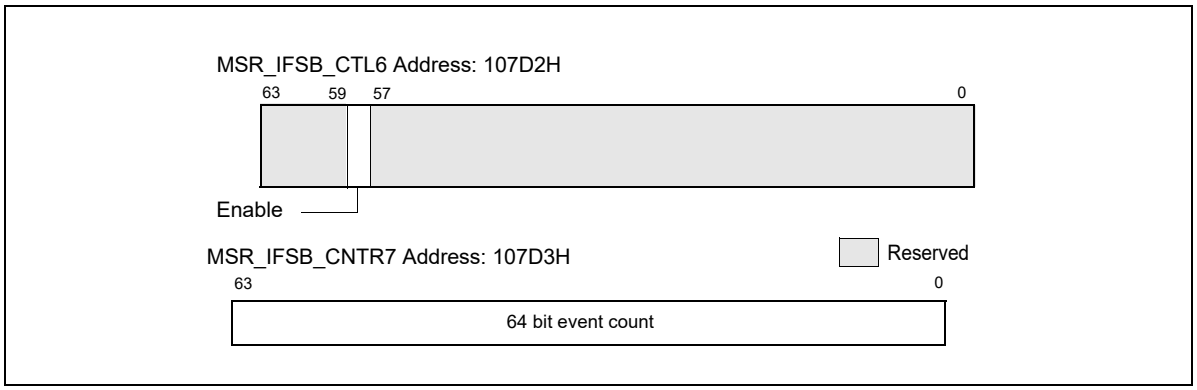

Figure 20-57. MSR_IFSB_CTL6, Address: 107D2H; MSR_IFSB_CNTR7, Address: 107D3H

20.6.7 Performance Monitoring on L3 and Caching Bus Controller Sub-Systems

The Intel Xeon processor 7400 series and Dual-Core Intel Xeon processor 7100 series employ a distinct L3/caching bus controller sub-system. These sub-system have a unique set of performance monitoring capability and programming interfaces that are largely common between these two processor families.

Intel Xeon processor 7400 series are based on 45 nm enhanced Intel Core microarchitecture. The CPUID signature is indicated by DisplayFamily_DisplayModel value of 06_1DH (see CPUID instruction in Chapter 3, "Instruction Set Reference, A-L" in the *Intel® 64 and IA-32 Architectures Software Developer's Manual, Volume 2A*). Intel Xeon processor 7400 series have six processor cores that share an L3 cache.

Dual-Core Intel Xeon processor 7100 series are based on Intel NetBurst microarchitecture, have a CPUID signature of family [0FH], model [06H] and a unified L3 cache shared between two cores. Each core in an Intel Xeon processor 7100 series supports Intel Hyper-Threading Technology, providing two logical processors per core.

Both Intel Xeon processor 7400 series and Intel Xeon processor 7100 series support multi-processor configurations using system bus interfaces. In Intel Xeon processor 7400 series, the L3/caching bus controller sub-system provides three Simple Direct Interface (SDI) to service transactions originated the XQ-replacement SDI logic in each dual-core modules. In Intel Xeon processor 7100 series, the IOQ logic in each processor core is replaced with a Simple Direct Interface (SDI) logic. The L3 cache is connected between the system bus and the SDI through

additional control logic. See Figure 20-58 for the block configuration of six processor cores and the L3/Caching bus controller sub-system in Intel Xeon processor 7400 series. Figure 20-58 shows the block configuration of two processor cores (four logical processors) and the L3/Caching bus controller sub-system in Intel Xeon processor 7100 series.

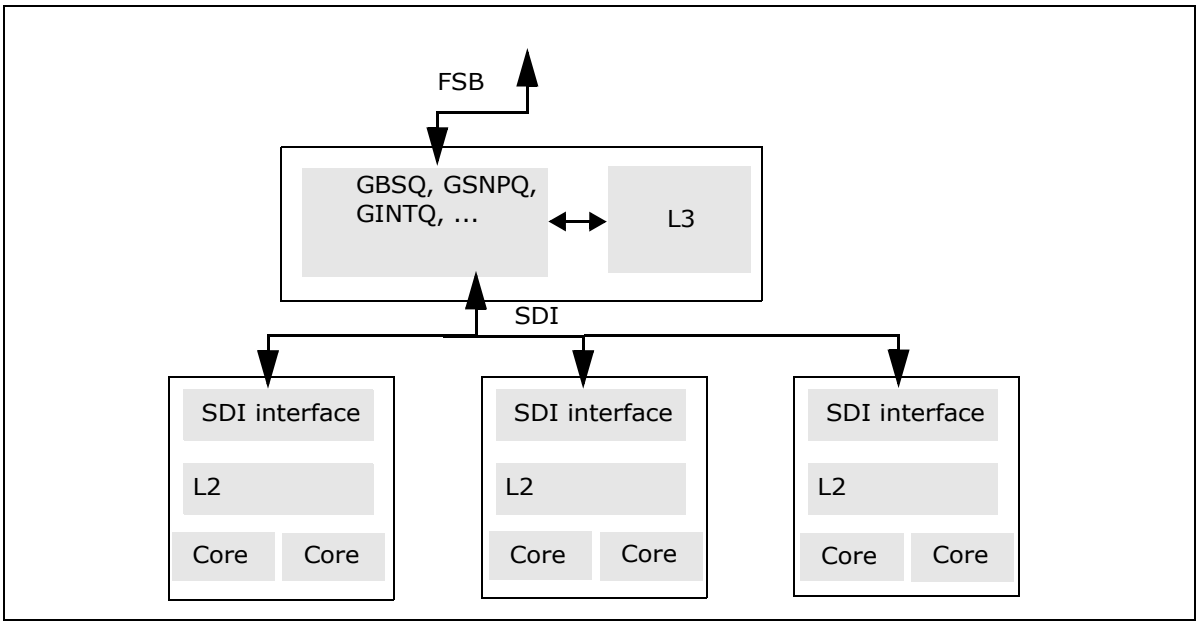

Figure 20-58. Block Diagram of the Intel® Xeon® Processor 7400 Series

Almost all of the performance monitoring capabilities available to processor cores with the same CPUID signatures (see Section 20.1 and Section 20.6.4) apply to Intel Xeon processor 7100 series. The MSRs used by performance monitoring interface are shared between two logical processors in the same processor core.

The performance monitoring capabilities available to processor with DisplayFamily_DisplayModel signature 06_17H also apply to Intel Xeon processor 7400 series. Each processor core provides its own set of MSRs for performance monitoring interface.

The IOQ_allocation and IOQ_active_entries events are not supported in Intel Xeon processor 7100 series and 7400 series. Additional performance monitoring capabilities applicable to the L3/caching bus controller sub-system are described in this section.

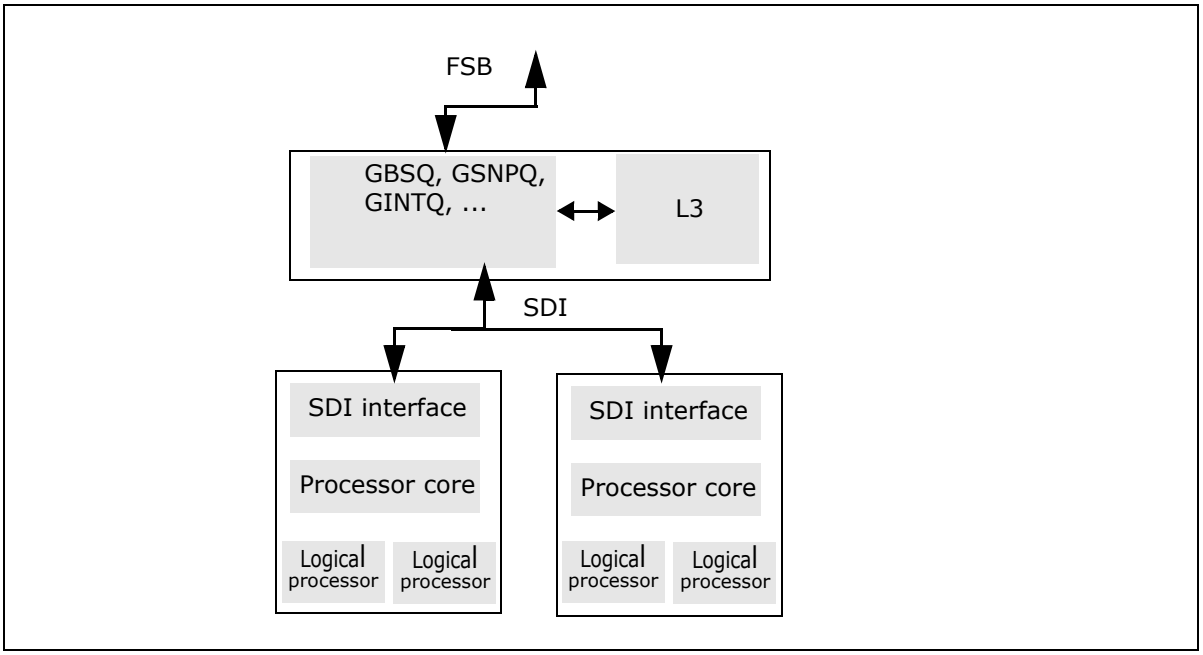

Figure 20-59. Block Diagram of the Intel® Xeon® Processor 7100 Series

20.6.7.1 Overview of Performance Monitoring with L3/Caching Bus Controller

The facility for monitoring events consists of a set of dedicated model-specific registers (MSRs). There are eight event select/counting MSRs that are dedicated to counting events associated with specified microarchitectural conditions. Programming of these MSRs requires using RDMSR/WRMSR instructions with 64-bit values. In addition, an MSR MSR_EMON_L3_GL_CTL provides simplified interface to control freezing, resetting, re-enabling operation of any combination of these event select/counting MSRs.

The eight MSRs dedicated to count occurrences of specific conditions are further divided to count three sub-classes of microarchitectural conditions:

- Two MSRs (MSR_EMON_L3_CTR_CTL0 and MSR_EMON_L3_CTR_CTL1) are dedicated to counting GBSQ events. Up to two GBSQ events can be programmed and counted simultaneously.
- Two MSRs (MSR_EMON_L3_CTR_CTL2 and MSR_EMON_L3_CTR_CTL3) are dedicated to counting GSNPQ events. Up to two GBSQ events can be programmed and counted simultaneously.
- Four MSRs (MSR_EMON_L3_CTR_CTL4, MSR_EMON_L3_CTR_CTL5, MSR_EMON_L3_CTR_CTL6, and MSR_EMON_L3_CTR_CTL7) are dedicated to counting external bus operations.

The bit fields in each of eight MSRs share the following common characteristics:

- Bits 63:32 is the event control field that includes an event mask and other bit fields that control counter operation. The event mask field specifies details of the microarchitectural condition, and its definition differs across GBSQ, GSNPQ, FSB.
- Bits 31:0 is the event count field. If the specified condition is met during each relevant clock domain of the event logic, the matched condition signals the counter logic to increment the associated event count field. The lower 32-bits of these 8 MSRs at addresses 107CC through 107D3 are treated as 32 bit performance counter registers.

In Dual-Core Intel Xeon processor 7100 series, the uncore performance counters can be accessed using RDPMC instruction with the index starting from 18 through 25. The EDX register returns zero when reading these 8 PMCs.

In Intel Xeon processor 7400 series, RDPMC with ECX between 2 and 9 can be used to access the eight uncore performance counter/control registers.

20.6.7.2 GBSQ Event Interface

The layout of MSR_EMON_L3_CTR_CTL0 and MSR_EMON_L3_CTR_CTL1 is given in Figure 20-60. Counting starts after software writes a non-zero value to one or more of the upper 32 bits.

The event mask field (bits 58:32) consists of the following eight attributes:

- Agent_Select (bits 35:32): The definition of this field differs slightly between Intel Xeon processor 7100 and 7400.

  For Intel Xeon processor 7100 series, each bit specifies a logical processor in the physical package. The lower two bits corresponds to two logical processors in the first processor core, the upper two bits corresponds to two logical processors in the second processor core. 0FH encoding matches transactions from any logical processor.

  For Intel Xeon processor 7400 series, each bit of [34:32] specifies the SDI logic of a dual-core module as the originator of the transaction. A value of 0111B in bits [35:32] specifies transaction from any processor core.

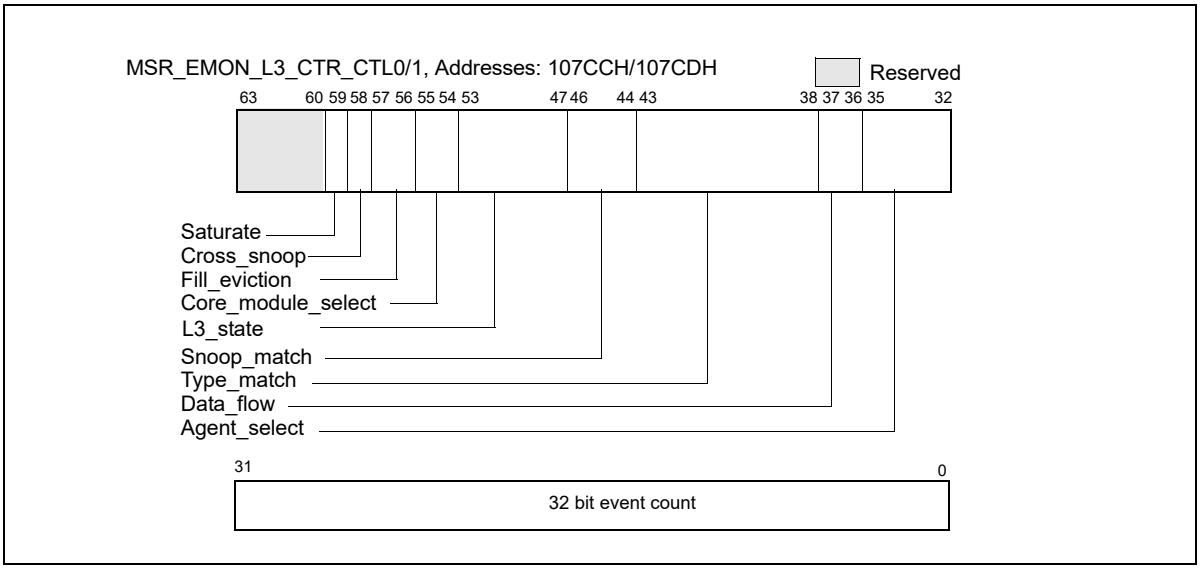

Figure 20-60. MSR_EMON_L3_CTR_CTL0/1, Addresses: 107CCH/107CDH

- Data_Flow (bits 37:36): Bit 36 specifies demand transactions, bit 37 specifies prefetch transactions.
- Type_Match (bits 43:38): Specifies transaction types. If all six bits are set, event count will include all transaction types.
- Snoop_Match: (bits 46:44): The three bits specify (in ascending bit position) clean snoop result, HIT snoop result, and HITM snoop results respectively.
- L3_State (bits 53:47): Each bit specifies an L2 coherency state.
- Core_Module_Select (bits 55:54): The valid encodings for L3 lookup differ slightly between Intel Xeon processor 7100 and 7400.

  For Intel Xeon processor 7100 series,

  — 00B: Match transactions from any core in the physical package

  — 01B: Match transactions from this core only

  — 10B: Match transactions from the other core in the physical package

  — 11B: Match transaction from both cores in the physical package

  For Intel Xeon processor 7400 series,

  — 00B: Match transactions from any dual-core module in the physical package

  — 01B: Match transactions from this dual-core module only

  — 10B: Match transactions from either one of the other two dual-core modules in the physical package

  - 11B: Match transaction from more than one dual-core modules in the physical package
- Fill_Eviction (bits 57:56): The valid encodings are
  - 00B: Match any transactions
  - 01B: Match transactions that fill L3
  - 10B: Match transactions that fill L3 without an eviction
  - 11B: Match transaction fill L3 with an eviction
- Cross_Snoop (bit 58): The encodings are
  - 0B: Match any transactions
  - 1B: Match cross snoop transactions

For each counting clock domain, if all eight attributes match, event logic signals to increment the event count field.

20.6.7.3 GSNPQ Event Interface

The layout of MSR_EMON_L3_CTR_CTL2 and MSR_EMON_L3_CTR_CTL3 is given in Figure 20-61. Counting starts after software writes a non-zero value to one or more of the upper 32 bits.

The event mask field (bits 58:32) consists of the following six attributes:

- Agent_Select (bits 37:32): The definition of this field differs slightly between Intel Xeon processor 7100 and 7400.
- For Intel Xeon processor 7100 series, each of the lowest 4 bits specifies a logical processor in the physical package. The lowest two bits corresponds to two logical processors in the first processor core, the next two bits corresponds to two logical processors in the second processor core. Bit 36 specifies other symmetric agent transactions. Bit 37 specifies central agent transactions. 3FH encoding matches transactions from any logical processor.

  For Intel Xeon processor 7400 series, each of the lowest 3 bits specifies a dual-core module in the physical package. Bit 37 specifies central agent transactions.
- Type_Match (bits 43:38): Specifies transaction types. If all six bits are set, event count will include any transaction types.
- Snoop_Match: (bits 46:44): The three bits specify (in ascending bit position) clean snoop result, HIT snoop result, and HITM snoop results respectively.
- L2_State (bits 53:47): Each bit specifies an L3 coherency state.
- Core_Module_Select (bits 56:54): Bit 56 enables Core_Module_Select matching. If bit 56 is clear, Core_Module_Select encoding is ignored. The valid encodings for the lower two bits (bit 55, 54) differ slightly between Intel Xeon processor 7100 and 7400.

  For Intel Xeon processor 7100 series, if bit 56 is set, the valid encodings for the lower two bits (bit 55, 54) are
  - 00B: Match transactions from only one core (irrespective which core) in the physical package
  - 01B: Match transactions from this core and not the other core
  - 10B: Match transactions from the other core in the physical package, but not this core
  - 11B: Match transaction from both cores in the physical package

  For Intel Xeon processor 7400 series, if bit 56 is set, the valid encodings for the lower two bits (bit 55, 54) are
  - 00B: Match transactions from only one dual-core module (irrespective which module) in the physical package.
  - 01B: Match transactions from one or more dual-core modules.
  - 10B: Match transactions from two or more dual-core modules.
  - 11B: Match transaction from all three dual-core modules in the physical package.
- Block_Snoop (bit 57): specifies blocked snoop.

For each counting clock domain, if all six attributes match, event logic signals to increment the event count field.

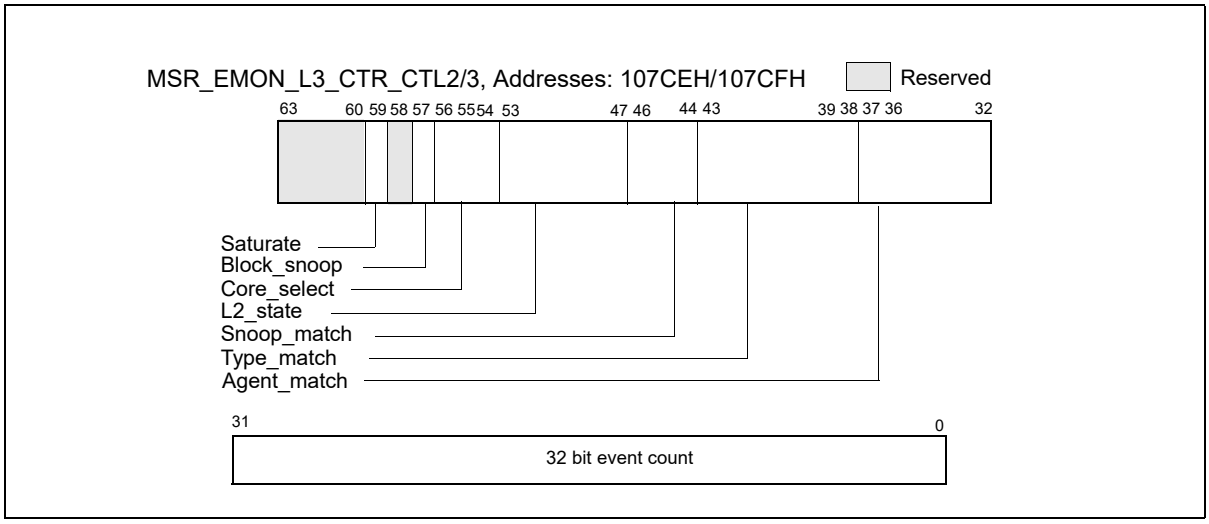

Figure 20-61. MSR_EMON_L3_CTR_CTL2/3, Addresses: 107CEH/107CFH

20.6.7.4 FSB Event Interface

The layout of MSR_EMON_L3_CTR_CTL4 through MSR_EMON_L3_CTR_CTL7 is given in Figure 20-62. Counting starts after software writes a non-zero value to one or more of the upper 32 bits.

The event mask field (bits 58:32) is organized as follows:

- Bit 58: must set to 1.
- FSB_Submask (bits 57:32): Specifies FSB-specific sub-event mask.

The FSB sub-event mask defines a set of independent attributes. The event logic signals to increment the associated event count field if one of the attribute matches. Some of the sub-event mask bit counts durations. A duration event increments at most once per cycle.

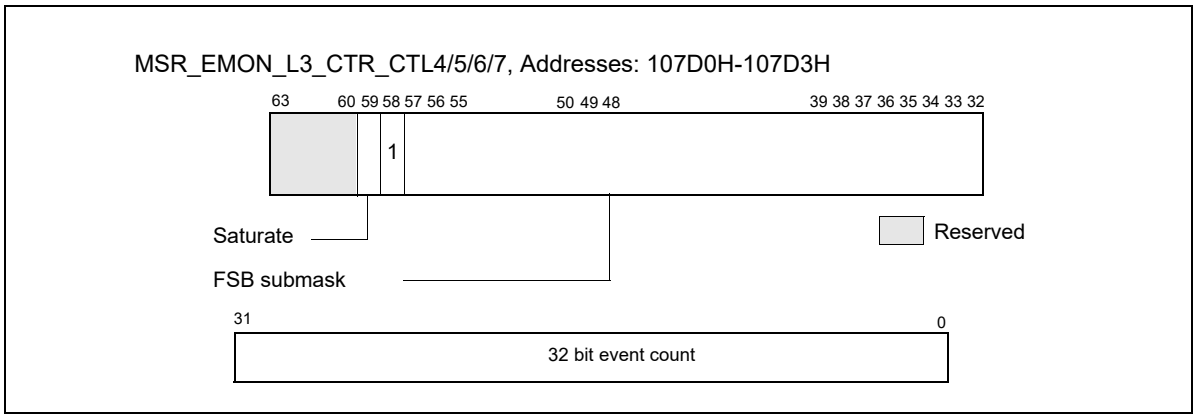

Figure 20-62. MSR_EMON_L3_CTR_CTL4/5/6/7, Addresses: 107D0H-107D3H

20.6.7.4.1 FSB Sub-Event Mask Interface

- FSB_type (bit 37:32): Specifies different FSB transaction types originated from this physical package.
- FSB_L_clear (bit 38): Count clean snoop results from any source for transaction originated from this physical package.
- FSB_L_hit (bit 39): Count HIT snoop results from any source for transaction originated from this physical package.

- FSB_L_hitm (bit 40): Count HITM snoop results from any source for transaction originated from this physical package.
- FSB_L_defer (bit 41): Count DEFER responses to this processor's transactions.
- FSB_L_retry (bit 42): Count RETRY responses to this processor's transactions.
- FSB_L_snoop_stall (bit 43): Count snoop stalls to this processor's transactions.
- FSB_DBSY (bit 44): Count DBSY assertions by this processor (without a concurrent DRDY).
- FSB_DRDY (bit 45): Count DRDY assertions by this processor.
- FSB_BNR (bit 46): Count BNR assertions by this processor.
- FSB_IOQ_empty (bit 47): Counts each bus clocks when the IOQ is empty.
- FSB_IOQ_full (bit 48): Counts each bus clocks when the IOQ is full.
- FSB_IOQ_active (bit 49): Counts each bus clocks when there is at least one entry in the IOQ.
- FSB_WW_data (bit 50): Counts back-to-back write transaction's data phase.
- FSB_WW_issue (bit 51): Counts back-to-back write transaction request pairs issued by this processor.
- FSB_WR_issue (bit 52): Counts back-to-back write-read transaction request pairs issued by this processor.
- FSB_RW_issue (bit 53): Counts back-to-back read-write transaction request pairs issued by this processor.
- FSB_other_DBSY (bit 54): Count DBSY assertions by another agent (without a concurrent DRDY).
- FSB_other_DRDY (bit 55): Count DRDY assertions by another agent.
- FSB_other_snoop_stall (bit 56): Count snoop stalls on the FSB due to another agent.
- FSB_other_BNR (bit 57): Count BNR assertions from another agent.

20.6.7.5 Common Event Control Interface

The MSR_EMON_L3_GL_CTL MSR provides simplified access to query overflow status of the GBSQ, GSNPQ, FSB event counters. It also provides control bit fields to freeze, unfreeze, or reset those counters. The following bit fields are supported:

- GL_freeze_cmd (bit 0): Freeze the event counters specified by the GL_event_select field.
- GL_unfreeze_cmd (bit 1): Unfreeze the event counters specified by the GL_event_select field.
- GL_reset_cmd (bit 2): Clear the event count field of the event counters specified by the GL_event_select field. The event select field is not affected.
- GL_event_select (bit 23:16): Selects one or more event counters to subject to specified command operations indicated by bits 2:0. Bit 16 corresponds to MSR_EMON_L3_CTR_CTL0, bit 23 corresponds to MSR_EMON_L3_CTR_CTL7.
- GL_event_status (bit 55:48): Indicates the overflow status of each event counters. Bit 48 corresponds to MSR_EMON_L3_CTR_CTL0, bit 55 corresponds to MSR_EMON_L3_CTR_CTL7.

In the event control field (bits 63:32) of each MSR, if the saturate control (bit 59, see Figure 20-60 for example) is set, the event logic forces the value FFFF_FFFFH into the event count field instead of incrementing it.

20.6.8 Performance Monitoring (P6 Family Processor)

The P6 family processors provide two 40-bit performance counters, allowing two types of events to be monitored simultaneously. These can either count events or measure duration. When counting events, a counter increments each time a specified event takes place or a specified number of events takes place. When measuring duration, it counts the number of processor clocks that occur while a specified condition is true. The counters can count events or measure durations that occur at any privilege level.

NOTE

The performance-monitoring events found at https://perfmon-events.intel.com/ are intended to be used as guides for performance tuning. Counter values reported are not guaranteed to be accurate and should be used as a relative guide for tuning. Known discrepancies are documented where applicable.

The performance-monitoring counters are supported by four MSRs: the performance event select MSRs (PerfEvtSel0 and PerfEvtSel1) and the performance counter MSRs (PerfCtr0 and PerfCtr1). These registers can be read from and written to using the RDMSR and WRMSR instructions, respectively. They can be accessed using these instructions only when operating at privilege level 0. The PerfCtr0 and PerfCtr1 MSRs can be read from any privilege level using the RDPMC (read performance-monitoring counters) instruction.

NOTE

The PerfEvtSel0, PerfEvtSel1, PerfCtr0, and PerfCtr1 MSRs and the events listed for P6 family processors are model-specific for P6 family processors. They are not guaranteed to be available in other IA-32 processors.

20.6.8.1 PerfEvtSel0 and PerfEvtSel1 MSRs

The PerfEvtSel0 and PerfEvtSel1 MSRs control the operation of the performance-monitoring counters, with one register used to set up each counter. They specify the events to be counted, how they should be counted, and the privilege levels at which counting should take place. Figure 20-63 shows the flags and fields in these MSRs.

The functions of the flags and fields in the PerfEvtSel0 and PerfEvtSel1 MSRs are as follows:

- **Event select field (bits 0 through 7) —** Selects the event logic unit to detect certain microarchitectural conditions.
- **Unit mask (UMASK) field (bits 8 through 15) —** Further qualifies the event logic unit selected in the event select field to detect a specific microarchitectural condition. For example, for some cache events, the mask is used as a MESI-protocol qualifier of cache states.

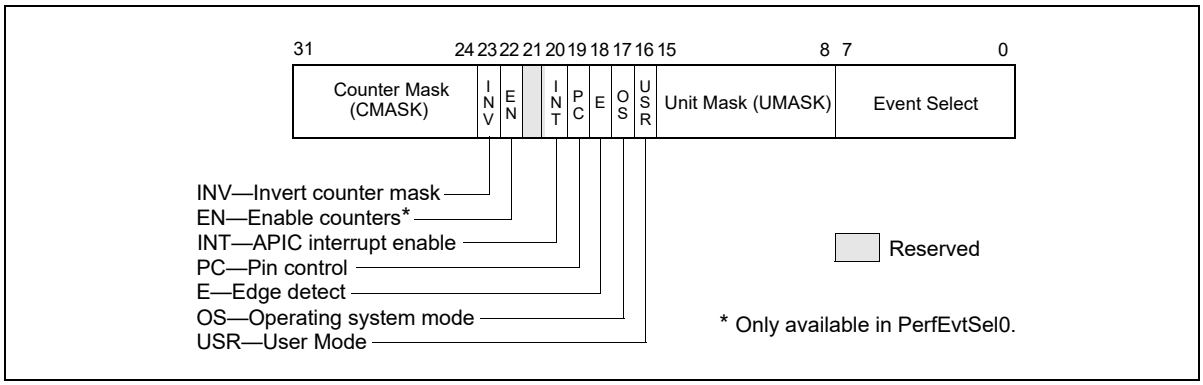

Figure 20-63. PerfEvtSel0 and PerfEvtSel1 MSRs

- **USR (user mode) flag (bit 16) —** Specifies that events are counted only when the processor is operating at privilege levels 1, 2 or 3. This flag can be used in conjunction with the OS flag.
- **OS (operating system mode) flag (bit 17) —** Specifies that events are counted only when the processor is operating at privilege level 0. This flag can be used in conjunction with the USR flag.
- **E (edge detect) flag (bit 18) —** Enables (when set) edge detection of events. The processor counts the number of deasserted to asserted transitions of any condition that can be expressed by the other fields. The mechanism is limited in that it does not permit back-to-back assertions to be distinguished. This mechanism allows software to measure not only the fraction of time spent in a particular state, but also the average length of time spent in such a state (for example, the time spent waiting for an interrupt to be serviced).

- **PC (pin control) flag (bit 19) —** When set, the processor toggles the PM*i* pins and increments the counter when performance-monitoring events occur; when clear, the processor toggles the PM*i* pins when the counter overflows. The toggling of a pin is defined as assertion of the pin for a single bus clock followed by deassertion.
- **INT (APIC interrupt enable) flag (bit 20) —** When set, the processor generates an exception through its local APIC on counter overflow.
- **EN (Enable Counters) Flag (bit 22) —** This flag is only present in the PerfEvtSel0 MSR. When set, performance counting is enabled in both performance-monitoring counters; when clear, both counters are disabled.
- **INV (invert) flag (bit 23) —** When set, inverts the counter-mask (CMASK) comparison, so that both greater than or equal to and less than comparisons can be made (0: greater than or equal; 1: less than). Note if counter-mask is programmed to zero, INV flag is ignored.
- **Counter mask (CMASK) field (bits 24 through 31) —** When nonzero, the processor compares this mask to the number of events counted during a single cycle. If the event count is greater than or equal to this mask, the counter is incremented by one. Otherwise the counter is not incremented. This mask can be used to count events only if multiple occurrences happen per clock (for example, two or more instructions retired per clock). If the counter-mask field is 0, then the counter is incremented each cycle by the number of events that occurred that cycle.

20.6.8.2 PerfCtr0 and PerfCtr1 MSRs

The performance-counter MSRs (PerfCtr0 and PerfCtr1) contain the event or duration counts for the selected events being counted. The RDPMC instruction can be used by programs or procedures running at any privilege level and in virtual-8086 mode to read these counters. The PCE flag in control register CR4 (bit 8) allows the use of this instruction to be restricted to only programs and procedures running at privilege level 0.

The RDPMC instruction is not serializing or ordered with other instructions. Thus, it does not necessarily wait until all previous instructions have been executed before reading the counter. Similarly, subsequent instructions may begin execution before the RDPMC instruction operation is performed.

Only the operating system, executing at privilege level 0, can directly manipulate the performance counters, using the RDMSR and WRMSR instructions. A secure operating system would clear the PCE flag during system initialization to disable direct user access to the performance-monitoring counters, but provide a user-accessible programming interface that emulates the RDPMC instruction.

The WRMSR instruction cannot arbitrarily write to the performance-monitoring counter MSRs (PerfCtr0 and PerfCtr1). Instead, the lower-order 32 bits of each MSR may be written with any value, and the high-order 8 bits are sign-extended according to the value of bit 31. This operation allows writing both positive and negative values to the performance counters.

20.6.8.3 Starting and Stopping the Performance-Monitoring Counters

The performance-monitoring counters are started by writing valid setup information in the PerfEvtSel0 and/or PerfEvtSel1 MSRs and setting the enable counters flag in the PerfEvtSel0 MSR. If the setup is valid, the counters begin counting following the execution of a WRMSR instruction that sets the enable counter flag. The counters can be stopped by clearing the enable counters flag or by clearing all the bits in the PerfEvtSel0 and PerfEvtSel1 MSRs. Counter 1 alone can be stopped by clearing the PerfEvtSel1 MSR.

20.6.8.4 Event and Time-Stamp Monitoring Software

To use the performance-monitoring counters and time-stamp counter, the operating system needs to provide an event-monitoring device driver. This driver should include procedures for handling the following operations:

- Feature checking.
- Initialize and start counters.
- Stop counters.
- Read the event counters.
- Read the time-stamp counter.

The event monitor feature determination procedure must check whether the current processor supports the performance-monitoring counters and time-stamp counter. This procedure compares the family and model of the processor returned by the CPUID instruction with those of processors known to support performance monitoring. (The Pentium and P6 family processors support performance counters.) The procedure also checks the MSR and TSC flags returned to register EDX by the CPUID instruction to determine if the MSRs and the RDTSC instruction are supported.

The initialize and start counters procedure sets the PerfEvtSel0 and/or PerfEvtSel1 MSRs for the events to be counted and the method used to count them and initializes the counter MSRs (PerfCtr0 and PerfCtr1) to starting counts. The stop counters procedure stops the performance counters (see Section 20.6.8.3, "Starting and Stopping the Performance-Monitoring Counters").

The read counters procedure reads the values in the PerfCtr0 and PerfCtr1 MSRs, and a read time-stamp counter procedure reads the time-stamp counter. These procedures would be provided in lieu of enabling the RDTSC and RDPMC instructions that allow application code to read the counters.

20.6.8.5 Monitoring Counter Overflow

The P6 family processors provide the option of generating a local APIC interrupt when a performance-monitoring counter overflows. This mechanism is enabled by setting the interrupt enable flag in either the PerfEvtSel0 or the PerfEvtSel1 MSR. The primary use of this option is for statistical performance sampling.

To use this option, the operating system should do the following things on the processor for which performance events are required to be monitored:

- Provide an interrupt vector for handling the counter-overflow interrupt.
- Initialize the APIC PERF local vector entry to enable handling of performance-monitor counter overflow events.
- Provide an entry in the IDT that points to a stub exception handler that returns without executing any instructions.
- Provide an event monitor driver that provides the actual interrupt handler and modifies the reserved IDT entry to point to its interrupt routine.

When interrupted by a counter overflow, the interrupt handler needs to perform the following actions:

- Save the instruction pointer (EIP register), code-segment selector, TSS segment selector, counter values and other relevant information at the time of the interrupt.
- Reset the counter to its initial setting and return from the interrupt.

An event monitor application utility or another application program can read the information collected for analysis of the performance of the profiled application.

20.6.9 Performance Monitoring (Pentium Processors)

The Pentium processor provides two 40-bit performance counters, which can be used to count events or measure duration. The counters are supported by three MSRs: the control and event select MSR (CESR) and the performance counter MSRs (CTR0 and CTR1). These can be read from and written to using the RDMSR and WRMSR instructions, respectively. They can be accessed using these instructions only when operating at privilege level 0.

Each counter has an associated external pin (PM0/BP0 and PM1/BP1), which can be used to indicate the state of the counter to external hardware.

NOTES

The CESR, CTR0, and CTR1 MSRs and the events listed for Pentium processors are model-specific for the Pentium processor.

The performance-monitoring events found at https://perfmon-events.intel.com/ are intended to be used as guides for performance tuning. Counter values reported are not guaranteed to be accurate and should be used as a relative guide for tuning. Known discrepancies are documented where applicable.

20.6.9.1 Control and Event Select Register (CESR)

The 32-bit control and event select MSR (CESR) controls the operation of performance-monitoring counters CTR0 and CTR1 and the associated pins (see Figure 20-64). To control each counter, the CESR register contains a 6-bit event select field (ES0 and ES1), a pin control flag (PC0 and PC1), and a 3-bit counter control field (CC0 and CC1). The functions of these fields are as follows:

- **ES0 and ES1 (event select) fields (bits 0-5, bits 16-21) —** Selects (by entering an event code in the field) up to two events to be monitored.

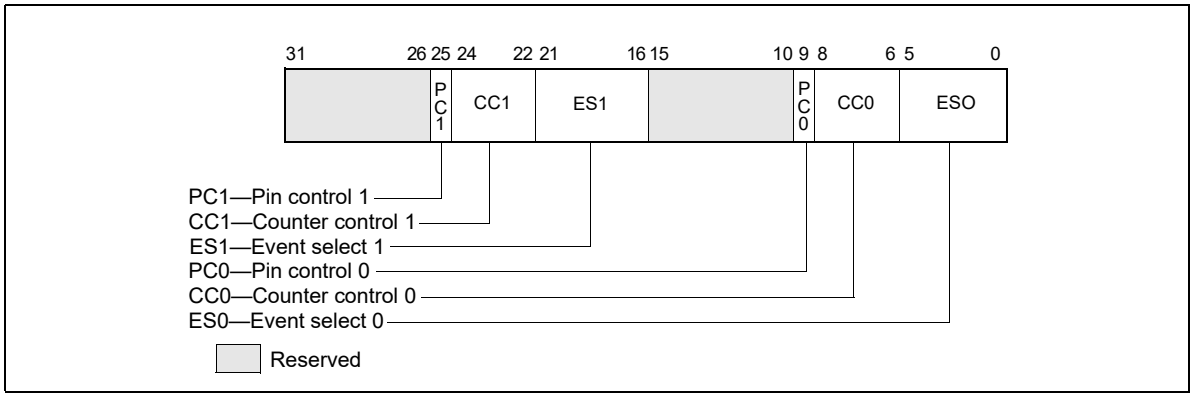

Figure 20-64. CESR MSR (Pentium Processor Only)

- **CC0 and CC1 (counter control) fields (bits 6-8, bits 22-24) —** Controls the operation of the counter. Control codes are as follows:

  000 — Count nothing (counter disabled).

  001 — Count the selected event while CPL is 0, 1, or 2.

  010 — Count the selected event while CPL is 3.

  011 — Count the selected event regardless of CPL.

  100 — Count nothing (counter disabled).

  101 — Count clocks (duration) while CPL is 0, 1, or 2.

  110 — Count clocks (duration) while CPL is 3.

  111 — Count clocks (duration) regardless of CPL.

  The highest order bit selects between counting events and counting clocks (duration); the middle bit enables counting when the CPL is 3; and the low-order bit enables counting when the CPL is 0, 1, or 2.

- **PC0 and PC1 (pin control) flags (bits 9, 25) —** Selects the function of the external performance-monitoring counter pin (PM0/BP0 and PM1/BP1). Setting one of these flags to 1 causes the processor to assert its associated pin when the counter has overflowed; setting the flag to 0 causes the pin to be asserted when the counter has been incremented. These flags permit the pins to be individually programmed to indicate the overflow or incremented condition. The external signaling of the event on the pins will lag the internal event by a few clocks as the signals are latched and buffered.

While a counter need not be stopped to sample its contents, it must be stopped and cleared or preset before switching to a new event. It is not possible to set one counter separately. If only one event needs to be changed, the CESR register must be read, the appropriate bits modified, and all bits must then be written back to CESR. At reset, all bits in the CESR register are cleared.

20.6.9.2 Use of the Performance-Monitoring Pins

When performance-monitor pins PM0/BP0 and/or PM1/BP1 are configured to indicate when the performance-monitor counter has incremented and an "occurrence event" is being counted, the associated pin is asserted (high) each time the event occurs. When a "duration event" is being counted, the associated PM pin is asserted for the

entire duration of the event. When the performance-monitor pins are configured to indicate when the counter has overflowed, the associated PM pin is asserted when the counter has overflowed.

When the PM0/BP0 and/or PM1/BP1 pins are configured to signal that a counter has incremented, it should be noted that although the counters may increment by 1 or 2 in a single clock, the pins can only indicate that the event occurred. Moreover, since the internal clock frequency may be higher than the external clock frequency, a single external clock may correspond to multiple internal clocks.

A "count up to" function may be provided when the event pin is programmed to signal an overflow of the counter. Because the counters are 40 bits, a carry out of bit 39 indicates an overflow. A counter may be preset to a specific value less then $2^{40} - 1$. After the counter has been enabled and the prescribed number of events has transpired, the counter will overflow.

Approximately 5 clocks later, the overflow is indicated externally and appropriate action, such as signaling an interrupt, may then be taken.

The PM0/BP0 and PM1/BP1 pins also serve to indicate breakpoint matches during in-circuit emulation, during which time the counter increment or overflow function of these pins is not available. After RESET, the PM0/BP0 and PM1/BP1 pins are configured for performance monitoring, however a hardware debugger may reconfigure these pins to indicate breakpoint matches.

20.6.9.3 Events Counted

Events that performance-monitoring counters can be set to count and record (using CTR0 and CTR1) are divided in two categories: occurrence and duration:

- **Occurrence events** — Counts are incremented each time an event takes place. If PM0/BP0 or PM1/BP1 pins are used to indicate when a counter increments, the pins are asserted each clock counters increment. But if an event happens twice in one clock, the counter increments by 2 (the pins are asserted only once).
- **Duration events** — Counters increment the total number of clocks that the condition is true. When used to indicate when counters increment, PM0/BP0 and/or PM1/BP1 pins are asserted for the duration.

20.7 COUNTING CLOCKS

The count of cycles, also known as clockticks, forms the basis for measuring how long a program takes to execute. Clockticks are also used as part of efficiency ratios like cycles per instruction (CPI). Processor clocks may stop ticking under circumstances like the following:

- The processor is halted when there is nothing for the CPU to do. For example, the processor may halt to save power while the computer is servicing an I/O request. When Intel Hyper-Threading Technology is enabled, both logical processors must be halted for performance-monitoring counters to be powered down.
- The processor is asleep as a result of being halted or because of a power-management scheme. There are different levels of sleep. In the some deep sleep levels, the time-stamp counter stops counting.

In addition, processor core clocks may undergo transitions at different ratios relative to the processor's bus clock frequency. Some of the situations that can cause processor core clock to undergo frequency transitions include:

- TM2 transitions.
- Enhanced Intel SpeedStep Technology transitions (P-state transitions).

For Intel processors that support TM2, the processor core clocks may operate at a frequency that differs from the Processor Base frequency (as indicated by processor frequency information reported by CPUID instruction). See Section 20.7.2 for more detail.

Due to the above considerations there are several important clocks referenced in this manual:

- **Base Clock —** The frequency of this clock is the frequency of the processor when the processor is not in turbo mode, and not being throttled via Intel SpeedStep.
- **Maximum Clock —** This is the maximum frequency of the processor when turbo mode is at the highest point.
- **Bus Clock —** These clockticks increment at a fixed frequency and help coordinate the bus on some systems.

- **Core Crystal Clock —** This is a clock that runs at fixed frequency; it coordinates the clocks on all packages across the system.
- **Non-halted Clockticks —** Measures clock cycles in which the specified logical processor is not halted and is not in any power-saving state. When Intel Hyper-Threading Technology is enabled, ticks can be measured on a per-logical-processor basis. There are also performance events on dual-core processors that measure clockticks per logical processor when the processor is not halted.
- **Non-sleep Clockticks —** Measures clock cycles in which the specified physical processor is not in a sleep mode or in a power-saving state. These ticks cannot be measured on a logical-processor basis.
- **Time-stamp Counter —** See Section 18.17, "Time-Stamp Counter".
- **Reference Clockticks —** TM2 or Enhanced Intel SpeedStep technology are two examples of processor features that can cause processor core clockticks to represent non-uniform tick intervals due to change of bus ratios. Performance events that counts clockticks of a constant reference frequency was introduced Intel Core Duo and Intel Core Solo processors. The mechanism is further enhanced on processors based on Intel Core microarchitecture.

Some processor models permit clock cycles to be measured when the physical processor is not in deep sleep (by using the time-stamp counter and the RDTSC instruction). Note that such ticks cannot be measured on a per-logical-processor basis. See Section 18.17, "Time-Stamp Counter," for detail on processor capabilities.

The first two methods use performance counters and can be set up to cause an interrupt upon overflow (for sampling). They may also be useful where it is easier for a tool to read a performance counter than to use a time stamp counter (the timestamp counter is accessed using the RDTSC instruction).

For applications with a significant amount of I/O, there are two ratios of interest:

- **Non-halted CPI —** Non-halted clockticks/instructions retired measures the CPI for phases where the CPU was being used. This ratio can be measured on a logical-processor basis when Intel Hyper-Threading Technology is enabled.
- **Nominal CPI —** Time-stamp counter ticks/instructions retired measures the CPI over the duration of a program, including those periods when the machine halts while waiting for I/O.

20.7.1 Non-Halted Reference Clockticks

Software can use UnHalted Reference Cycles on either a general purpose performance counter using event mask 0x3C and UMASK 0x01 or on fixed function performance counter 2 to count at a constant rate. These events count at a consistent rate irrespective of P-state, TM2, or frequency transitions that may occur to the processor. The UnHalted Reference Cycles event may count differently on the general purpose event and fixed counter.

20.7.2 Cycle Counting and Opportunistic Processor Operation

As a result of the state transitions due to opportunistic processor performance operation (see Chapter 15, "Power and Thermal Management"), a logical processor or a processor core can operate at frequency different from the Processor Base frequency.

The following items are expected to hold true irrespective of when opportunistic processor operation causes state transitions:

- The time stamp counter operates at a fixed-rate frequency of the processor.
- The IA32_MPERF counter increments at a fixed frequency irrespective of any transitions caused by opportunistic processor operation.
- The IA32_FIXED_CTR2 counter increments at the same TSC frequency irrespective of any transitions caused by opportunistic processor operation.
- The Local APIC timer operation is unaffected by opportunistic processor operation.
- The TSC, IA32_MPERF, and IA32_FIXED_CTR2 operate at close to the maximum non-turbo frequency, which is equal to the product of scalable bus frequency and maximum non-turbo ratio.

20.7.3 Determining the Processor Base Frequency

For Intel processors in which the nominal core crystal clock frequency is enumerated in CPUID.15H.ECX and the core crystal clock ratio is encoded in CPUID.15H (see Table 3-8 "Information Returned by CPUID Instruction"), the nominal TSC frequency can be determined by using the following equation:

Nominal TSC frequency = (CPUID.15H.ECX[31:0] * CPUID.15H.EBX[31:0]) ÷ CPUID.15H.EAX[31:0]

For Intel processors in which CPUID.15H.EBX[31:0] ÷ CPUID.0x15.EAX[31:0] is enumerated but CPUID.15H.ECX is not enumerated, Table 20-91 can be used to look up the nominal core crystal clock frequency.

Table 20-91. Nominal Core Crystal Clock Frequency

Processor Families/Processor Number Series[1]	Nominal Core Crystal Clock Frequency
Intel® Xeon® Scalable Processor Family with CPUID signature 06_55H.	25 MHz
6th and 7th generation Intel® Core™ processors and Intel® Xeon® W Processor Family.	24 MHz
Next Generation Intel Atom® processors based on Goldmont Microarchitecture with CPUID signature 06_5CH (does not include Intel Xeon processors).	19.2 MHz

NOTES:

1. For any processor in which CPUID.15H is enumerated and MSR_PLATFORM_INFO[15:8] (which gives the scalable bus frequency) is available, a more accurate frequency can be obtained by using CPUID.15H.

20.7.3.1 For Intel® Processors Based on Sandy Bridge, Ivy Bridge, Haswell, and Broadwell Microarchitectures

The scalable bus frequency is encoded in the bit field MSR_PLATFORM_INFO[15:8] and the nominal TSC frequency can be determined by multiplying this number by a bus speed of 100 MHz.

20.7.3.2 For Intel® Processors Based on Nehalem Microarchitecture

The scalable bus frequency is encoded in the bit field MSR_PLATFORM_INFO[15:8] and the nominal TSC frequency can be determined by multiplying this number by a bus speed of 133.33 MHz.

20.7.3.3 For Intel Atom® Processors Based on Silvermont Microarchitecture (Including Intel Processors Based on Airmont Microarchitecture)

The scalable bus frequency is encoded in the bit field MSR_PLATFORM_INFO[15:8] and the nominal TSC frequency can be determined by multiplying this number by the scalable bus frequency. The scalable bus frequency is encoded in the bit field MSR_FSB_FREQ[2:0] for Intel Atom processors based on the Silvermont microarchitecture, and in bit field MSR_FSB_FREQ[3:0] for processors based on the Airmont microarchitecture; see Chapter 2, "Model-Specific Registers (MSRs)" in the *Intel® 64 and IA-32 Architectures Software Developer's Manual, Volume 4*.

20.7.3.4 For Intel® Core™ 2 Processor Family and for Intel® Xeon® Processors Based on Intel Core Microarchitecture

For processors based on Intel Core microarchitecture, the scalable bus frequency is encoded in the bit field MSR_FSB_FREQ[2:0] at (0CDH), see Chapter 2, "Model-Specific Registers (MSRs)" in the *Intel® 64 and IA-32 Architectures Software Developer's Manual, Volume 4*. The maximum resolved bus ratio can be read from the following bit field:

- If XE operation is disabled, the maximum resolved bus ratio can be read in MSR_PLATFORM_ID[12:8]. It corresponds to the Processor Base frequency.

- IF XE operation is enabled, the maximum resolved bus ratio is given in MSR_PERF_STATUS[44:40], it corresponds to the maximum XE operation frequency configured by BIOS.

XE operation of an Intel 64 processor is implementation specific. XE operation can be enabled only by BIOS. If MSR_PERF_STATUS[31] is set, XE operation is enabled. The MSR_PERF_STATUS[31] field is read-only.

20.8 IA32_PERF_CAPABILITIES MSR ENUMERATION

The layout of IA32_PERF_CAPABILITIES MSR is shown in Figure 20-65; it provides enumeration of a variety of interfaces:

- IA32_PERF_CAPABILITIES.LBR_FMT[bits 5:0]: encodes the LBR format, details are described in Section 18.4.8.1.
- IA32_PERF_CAPABILITIES.PEBSTrap[6]: Trap/Fault-like indicator of PEBS recording assist; see Section 20.6.2.4.2.
- IA32_PERF_CAPABILITIES.PEBSArchRegs[7]: Indicator of PEBS assist save architectural registers; see Section 20.6.2.4.2.
- IA32_PERF_CAPABILITIES.PEBS_FMT[bits 11:8]: Specifies the encoding of the layout of PEBS records; see Section 20.6.2.4.2.
- IA32_PERF_CAPABILITIES.FREEZE_WHILE_SMM[12]: Indicates IA32_DEBUGCTL.FREEZE_WHILE_SMM is supported if 1, see Section 20.8.1.
- IA32_PERF_CAPABILITIES.FULL_WRITE[13]: Indicates the processor supports IA32_A_PMCx interface for updating bits 32 and above of IA32_PMCx; see Section 20.2.6.
- IA32_PERF_CAPABILITIES.PEBS_BASELINE [bit 14]: If set, the following is true:
  - The IA32_PEBS_ENABLE MSR (address 3F1H) exists and all architecturally enumerated fixed and general-purpose counters have corresponding bits in IA32_PEBS_ENABLE that enable generation of PEBS records. The general-purpose counter bits start at bit IA32_PEBS_ENABLE[0], and the fixed counter bits start at bit IA32_PEBS_ENABLE[32].
  - The format of the PEBS record is enumerated by IA32_PERF_CAPABILITIES.PEBS_FMT; see Section 20.6.2.4.2.
  - Extended PEBS is supported. All counters support the PEBS facility, and all events (both precise and non-precise) can generate PEBS records when PEBS is enabled for that counter. Note that not all events may be available on all counters.
  - Adaptive PEBS is supported. The PEBS_DATA_CFG MSR (address 3F2H) and adaptive record enable bits (IA32_PERFEVTSELx.Adaptive_Record and IA32_FIXED_CTR_CTRL.FCx_Adaptive_Record) are supported. The definition of the PEBS_DATA_CFG MSR, including which bits are supported and how they affect the record, is enumerated by IA32_PERF_CAPABILITIES.PEBS_FMT; see Section 20.9.2.3.
  - NOTE: Software is recommended to feature PEBS Baseline when the following is true: IA32_PERF_CAPABILITIES.PEBS_BASELINE[14] && IA32_PERF_CAPABILITIES.PEBS_FMT[11:8] ≥ 4.
- IA32_PERF_CAPABILITIES.PERF_METRICS_AVAILABLE[15]: If set, indicates that the architecture provides built in support for TMA L1 metrics through the PERF_METRICS MSR, see Section 20.3.9.3.
- IA32_PERF_CAPABILITIES.PEBS_OUTPUT_PT_AVAIL[16]: If set on parts that enumerate support for Intel PT (CPUID.0x7.0.EBX[25]=1), setting IA32_PEBS_ENABLE.PEBS_OUTPUT to 01B will result in PEBS output being written into the Intel PT trace stream. See Section 20.5.5.2.

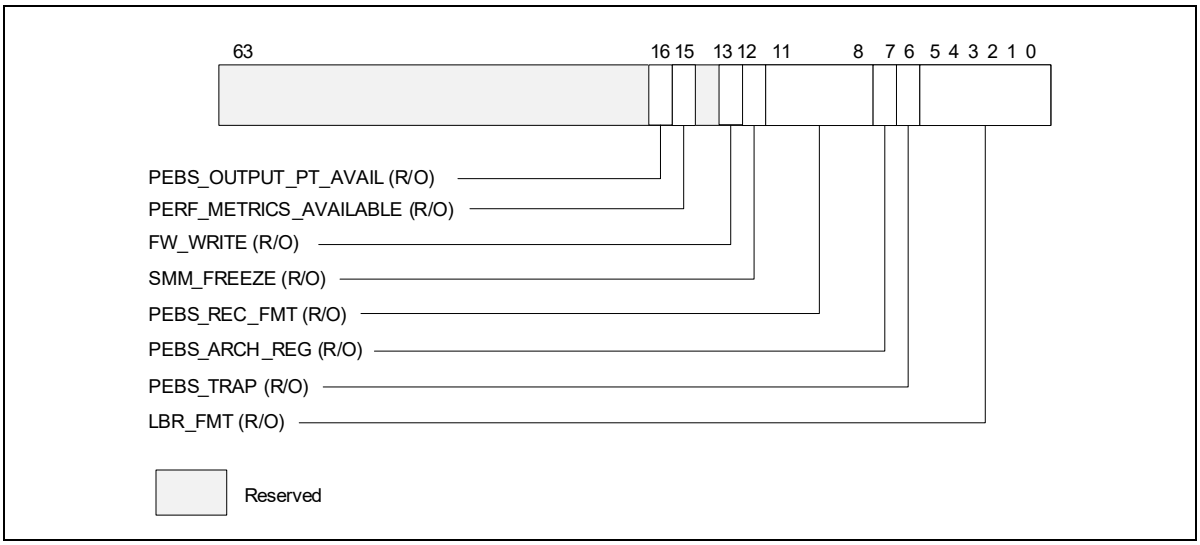

Figure 20-65. Layout of IA32_PERF_CAPABILITIES MSR

20.8.1 Filtering of SMM Handler Overhead

When performance monitoring facilities and/or branch profiling facilities (see Section 18.5, "Last Branch, Interrupt, and Exception Recording (Intel® Core™ 2 Duo and Intel Atom® Processors)") are enabled, these facilities capture event counts, branch records and branch trace messages occurring in a logical processor. The occurrence of interrupts, instruction streams due to various interrupt handlers all contribute to the results recorded by these facilities.

If CPUID.01H:ECX.PDCM[bit 15] is 1, the processor supports the IA32_PERF_CAPABILITIES MSR. If IA32_PERF_CAPABILITIES.FREEZE_WHILE_SMM[Bit 12] is 1, the processor supports the ability for system software using performance monitoring and/or branch profiling facilities to filter out the effects of servicing system management interrupts.

If the FREEZE_WHILE_SMM capability is enabled on a logical processor and after an SMI is delivered, the processor will clear all the enable bits of IA32_PERF_GLOBAL_CTRL, save a copy of the content of IA32_DEBUGCTL and disable LBR, BTF, TR, and BTS fields of IA32_DEBUGCTL before transferring control to the SMI handler.

The enable bits of IA32_PERF_GLOBAL_CTRL will be set to 1, the saved copy of IA32_DEBUGCTL prior to SMI delivery will be restored , after the SMI handler issues RSM to complete its servicing.

It is the responsibility of the SMM code to ensure the state of the performance monitoring and branch profiling facilities are preserved upon entry or until prior to exiting the SMM. If any of this state is modified due to actions by the SMM code, the SMM code is required to restore such state to the values present at entry to the SMM handler.

System software is allowed to set IA32_DEBUGCTL.FREEZE_WHILE_SMM[bit 14] to 1 only supported as indicated by IA32_PERF_CAPABILITIES.FREEZE_WHILE_SMM[Bit 12] reporting 1.

20.9 PEBS FACILITY

20.9.1 Extended PEBS

- The Extended PEBS feature supports Processor Event Based Sampling (PEBS) on all counters, both fixed function and general purpose; and all performance monitoring events, both precise and non-precise. PEBS can be enabled for the general purpose counters using PEBS_EN_PMCi bits of IA32_PEBS_ENABLE (i = 0, 1,..m). PEBS can be enabled for 'i' fixed function counters using the PEBS_EN_FIXEDi bits of IA32_PEBS_ENABLE (i = 0, 1, ...n).

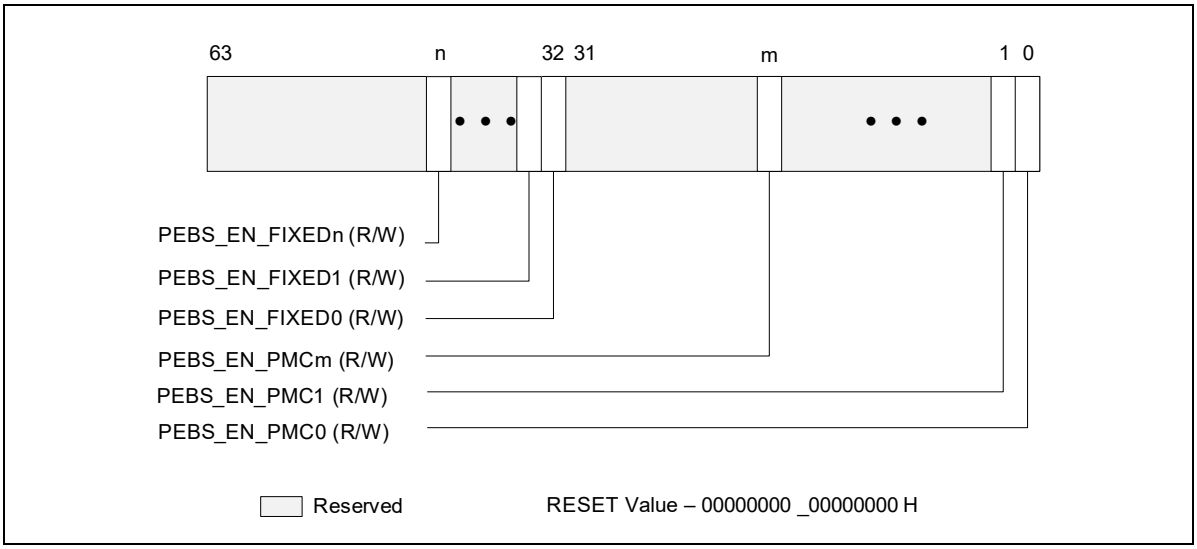

Figure 20-66. Layout of IA32_PEBS_ENABLE MSR

A PEBS record due to a precise event will be generated after an instruction that causes the event when the counter has already overflowed. A PEBS record due to a non-precise event will occur at the next opportunity after the counter has overflowed, including immediately after an overflow is set by an MSR write.

Currently, IA32_FIXED_CTR0 counts instructions retired and is a precise event. IA32_FIXED_CTR1, IA32_FIXED_CTR2 … IA32_FIXED_CTRm count as non-precise events.

The Applicable Counter field in the Basic Info Group of the PEBS record indicates which counters caused the PEBS record to be generated. It is in the same format as the enable bits for each counter in IA32_PEBS_ENABLE. As an example, an Applicable Counter field with bits 2 and 32 set would indicate that both general purpose counter 2 and fixed function counter 0 generated the PEBS record.

- To properly use PEBS for the additional counters, software will need to set up the counter reset values in PEBS portion of the DS_BUFFER_MANAGEMENT_AREA data structure that is indicated by the IA32_DS_AREA register. The layout of the DS_BUFFER_MANAGEMENT_AREA is shown in Figure 20-67. When a counter generates a PEBS records, the appropriate counter reset values will be loaded into that counter. In the above example where general purpose counter 2 and fixed function counter 0 generated the PEBS record, general purpose counter 2 would be reloaded with the value contained in PEBS GP Counter 2 Reset (offset 50H) and fixed function counter 0 would be reloaded with the value contained in PEBS Fixed Counter 0 Reset (offset 80H).

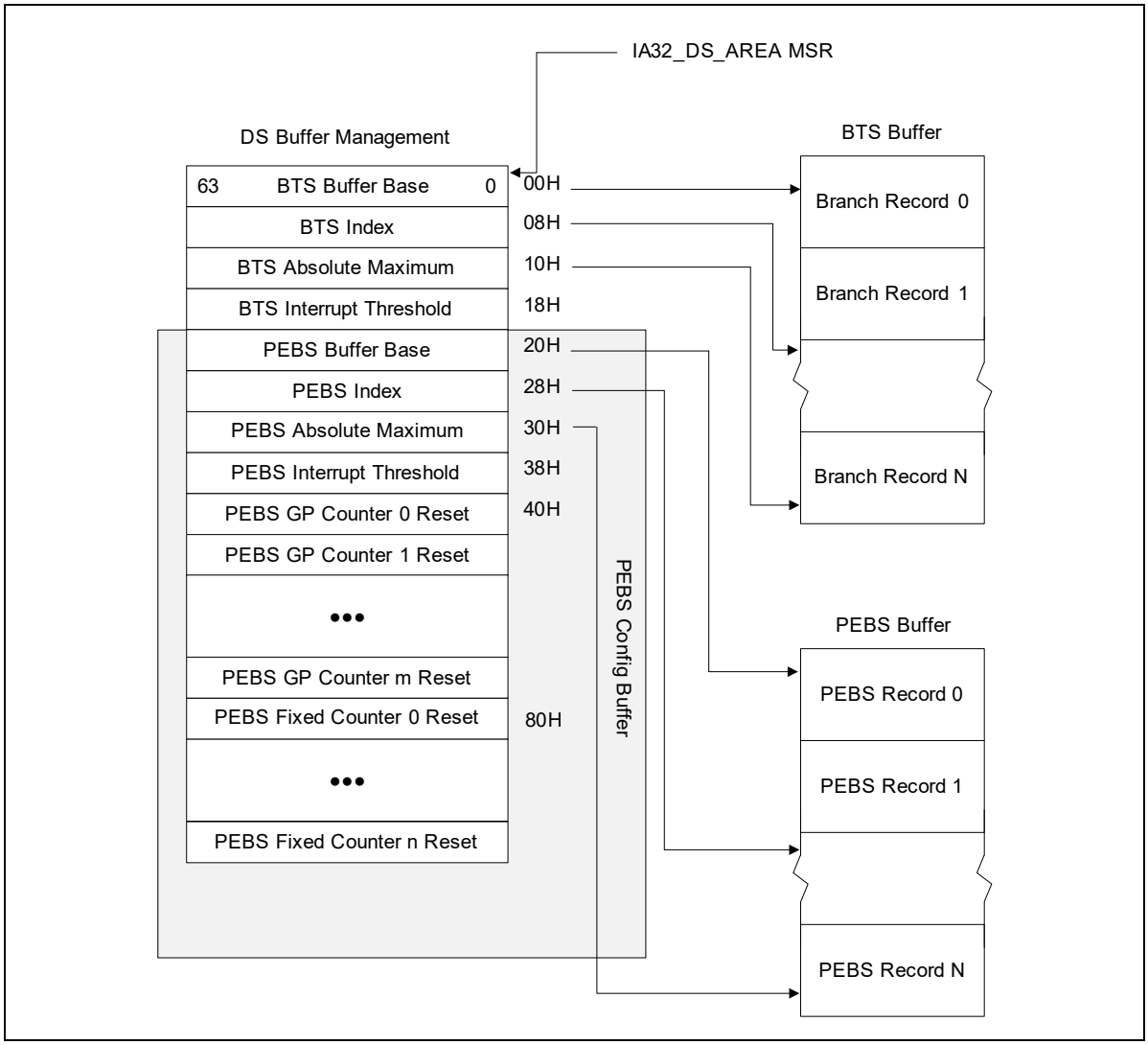

Figure 20-67. PEBS Programming Environment

Extended PEBS support debuts on Intel Atom® processors based on the Goldmont Plus microarchitecture and future Intel® Core™ processors based on the Ice Lake microarchitecture.

20.9.2 Adaptive PEBS

The PEBS facility has been enhanced to collect the following CPU state in addition to GPRs, EventingIP, TSC, and memory access related information collected by legacy PEBS:

- XMM registers
- LBR records (TO/FROM/INFO)

The PEBS record is restructured where fields are grouped into Basic group, Memory group, GPR group, XMM group, and LBR group. A new register MSR_PEBS_DATA_CFG provides software the capability to select data groups of interest and thus reduce the record size in memory and record generation latency. Hence, a PEBS record's size and layout vary based on the selected groups. The MSR also allows software to select LBR depth for branch data records.

By default, the PEBS record will only contain the Basic group. Optionally, each counter can be configured to generate a PEBS records with the groups specified in MSR_PEBS_DATA_CFG.

Details and examples for the Adaptive PEBS capability follow below.

20.9.2.1 Adaptive_Record Counter Control

- IA32_PERFEVTSELx.Adaptive_Record[34]: If this bit is set and IA32_PEBS_ENABLE.PEBS_EN_PMCx is set for the corresponding GP counter, an overflow of PMCx results in generation of an adaptive PEBS record with state information based on the selections made in MSR_PEBS_DATA_CFG. If this bit is not set, a basic record is generated.

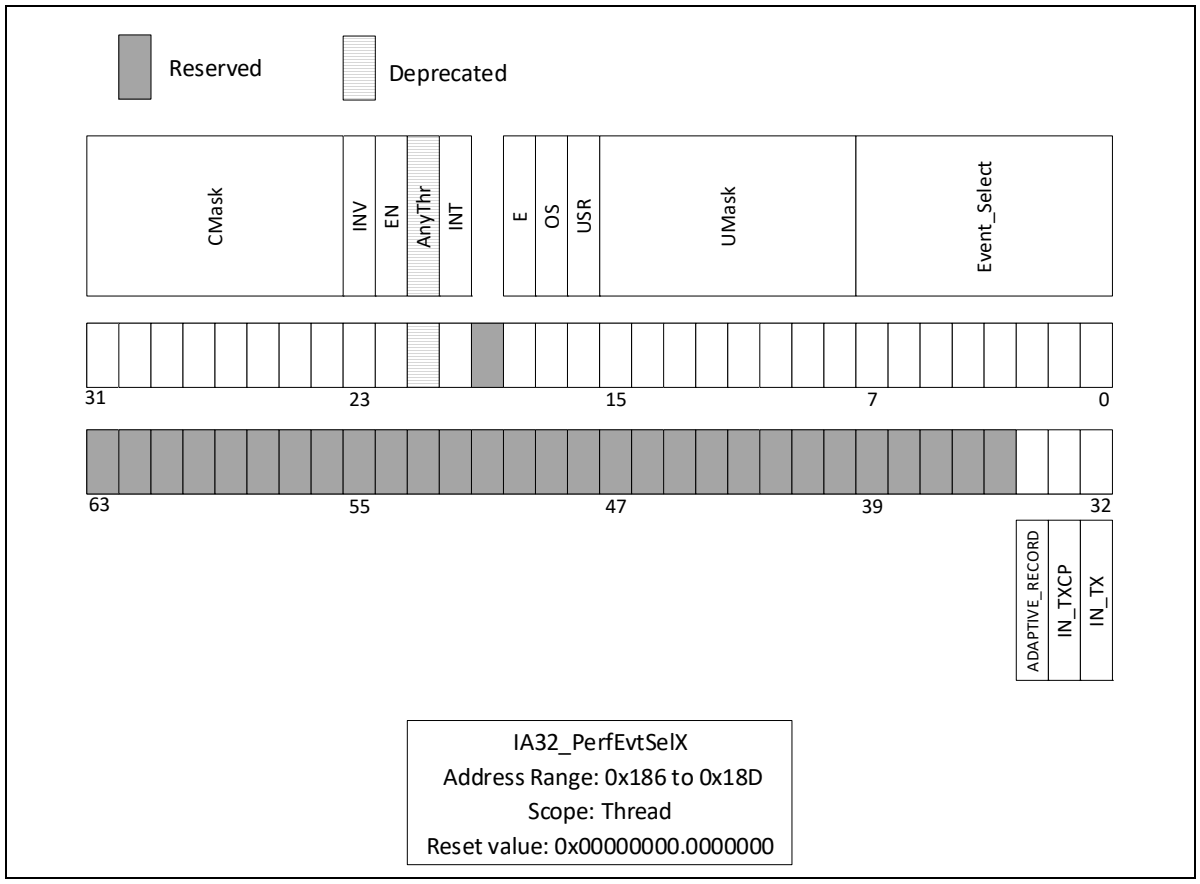

Figure 20-68. Layout of IA32_PerfEvtSelX MSR Supporting Adaptive PEBS

- IA32_FIXED_CTR_CTRL.FCx_Adaptive_Record: If this bit is set and IA32_PEBS_ENABLE.PEBS_EN_FIXEDx is set for the corresponding Fixed counter, an overflow of FixedCtrx results in generation of an adaptive PEBS record with state information based on the selections made in MSR_PEBS_DATA_CFG. If this bit is not set, a basic record is generated.

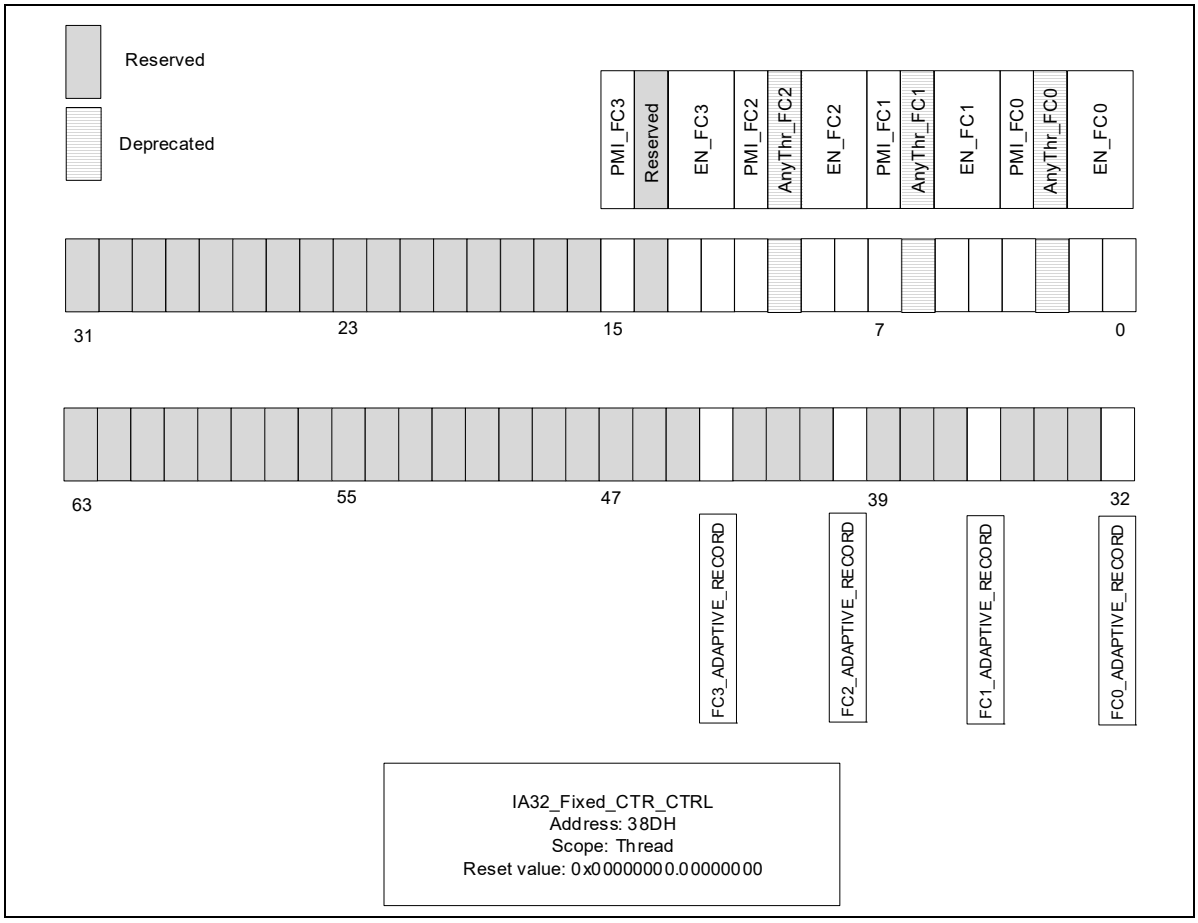

Figure 20-69. Layout of IA32_FIXED_CTR_CTRL MSR Supporting Adaptive PEBS

20.9.2.2 PEBS Record Format

The data fields in the PEBS record are aggregated into five groups which are described in the sub-sections below. Processors that support Adaptive PEBS implement a new MSR called MSR_PEBS_DATA_CFG which allows software to select the data groups to be captured. The data groups are not placed at fixed locations in the PEBS record, but are positioned immediately after one another, thus making the record format/size variable based on the groups selected.

20.9.2.2.1 Basic Info

The Basic group contains essential information for software to parse a record along with several critical fields. It is always collected.

Table 20-92. Basic Info Group

Field Name	Bit Width	Description
Record Format	[47:0]	This field indicates which data groups are included in the record. The field is zero if none of the counters that triggered the current PEBS record have their Adaptive_Record bit set. Otherwise it contains the value of MSR_PEBS_DATA_CFG.
	[63:48]	This field provides the size of the current record in bytes. Selected groups are packed back-to-back in the record without gaps or padding for unselected groups.

Table 20-92. Basic Info Group (Contd.)

Instruction Pointer	[63:0]	This field reports the Eventing Instruction Pointer (EventingIP) of the retired instruction that triggered the PEBS record generation. Note that this field is different than R/EIP which records the instruction pointer of the next instruction to be executed after record generation. The legacy R/EIP field has been removed.
Applicable Counters	[63:0]	The Applicable Counters field indicates which counters triggered the generation of the PEBS record, linking the record to specific events. This allows software to correlate the PEBS record entry properly with the instruction that caused the event, even when multiple counters are configured to generate PEBS records and multiple bits are set in the field.
TSC	[63:0]	This field provides the time stamp counter value when the PEBS record was generated.

20.9.2.2.2 Memory Access Info

This group contains the legacy PEBS memory-related fields; see Section 20.3.1.1.2.

Table 20-93. Memory Access Info Group

Field Name	Bit Width	Description
Memory Access Address	[63:0]	This field contains the linear address of the source of the load, or linear address of the destination (target) of the store. This value is written as a 64-bit address in canonical form.
Memory Auxiliary Info	[63:0]	When a MEM_TRANS_RETIRED.* event is configured in a General Purpose counter, this field contains an encoded value indicating the memory hierarchy source which satisfied the load. These encodings are detailed in Table 20-4 and Table 20-13. If the PEBS assist was triggered for a store uop, this field will contain information indicating the status of the store, as detailed in Table 20-14.
Memory Access Latency[1]	[63:0]	When a MEM_TRANS_RETIRED.* event is configured in a General Purpose counter, this field contains the latency to service the load in core clock cycles.
TSX Auxiliary Info	[31:0]	This field contains the number of cycles in the last TSX region, regardless of whether that region had aborted or committed.
	[63:32]	This field contains the abort details. Refer to Section 20.3.6.5.1.

NOTES:

1. In certain conditions, high latencies in fields under "Memory Access Latency" may be observed even when the Data Src of the "Memory Auxiliary Info" field indicates a close source.

Beginning with 12th generation Intel Core processors, the memory access information group has been updated. New fields added are shaded gray in Table 20-94.

Table 20-94. Updated Memory Access Info Group

Field Name	Sub-field Name	Bits	Description
Access Address (offset 0H)	DLA	[63:0]	This field reports the data linear address (DLA) of the memory access in canonical form. A zero value indicates the processor could not retrieve the address of the particular access.
Access Info (offset 8H)	Data Src	[3:0]	An encoded value indicating the memory hierarchy source which satisfied the access. These encodings are detailed in Table 20-4. A zero value indicates the processor could not retrieve the data source of the particular access.
	STLB-miss	[4]	A value of 1 indicates the access has missed the Second-level TLB (STLB).
	Is-Lock	[5]	A value of 1 indicates the access was part of a locked (atomic) memory transaction.
	Data-Blk	[6]	A value of 1 indicates the load was blocked since its data could not be forwarded from a preceding store.
	Address-Blk	[7]	A value of 1 indicates the load was blocked due to potential address conflict with a preceding store.
Access Latency (offset 10H)	Instruction Latency	[15:0]	Measured instruction latency in core cycles. For loads, the latency starts by the dispatch of the load operation for execution and lasts until completion of the instruction it belongs to. This field includes the entire latency including time for data-dependency resolution or TLB lookups.
	Cache Latency	[47:32]	Measured cache access latency in core cycles. For loads, the latency starts by the actual cache access until the data is returned by the memory subsystem. For stores, the latency starts when the demand write accesses the L1 data-cache and lasts until the cacheline write is completed in the memory subsystem. This field does not include non-data-cache latency such as memory ordering checks or TLB lookups.
TSX (offset 18H)	Transaction Latency	[31:0]	This field contains the number of cycles in the last TSX region, regardless of whether that region had aborted or committed.
	Abort Info	[63:32]	This field contains the abort details. Refer to Section 20.3.6.5.1.

To determine which fields are supported for certain performance monitoring events, consult the Memory Info attribute in the event lists at https://download.01.org/perfmon/.

NOTE

There may be additional block reasons, even if Data-Blk and Address-Blk are both clear, e.g., non-optimal instruction latency.

On P-core, the new Data-Blk and Address-Blk bits require the event LD_BLOCKS.STORE_FORWARD (r8203) to be configured in a programmable counter.

20.9.2.2.3 GPRs

This group is captured when the GPR bit is enabled in MSR_PEBS_DATA_CFG. GPRs are always 64 bits wide. If they are selected for non 64-bit mode, the upper 32-bit of the legacy RAX - RDI and all contents of R8-15 GPRs will be filled with 0s. In 64bit mode, the full 64 bit value of each register is written.

The order differs from legacy. The table below shows the order of the GPRs in Ice Lake microarchitecture.

Table 20-95. GPRs in Ice Lake Microarchitecture

Field Name	Bit Width
RFLAGS	[63:0]
RIP	[63:0]
RAX	[63:0]
RCX*	[63:0]
RDX*	[63:0]
RBX*	[63:0]
RSP*	[63:0]
RBP*	[63:0]
RSI*	[63:0]
RDI*	[63:0]
R8	[63:0]
…	…
R15	[63:0]

The machine state reported in the PEBS record is the committed machine state immediately after the instruction that triggers PEBS completes.

For instance, consider the following instruction sequence:

MOV eax, [eax]; triggers PEBS record generation

NOP

If the mov instruction triggers PEBS record generation, the EventingIP field in the PEBS record will report the address of the mov, and the value of EAX in the PEBS record will show the value read from memory, not the target address of the read operation. And the value of RIP will contain the linear address of the nop.

20.9.2.2.4 XMMs

This group is captured when the XMM bit is enabled in MSR_PEBS_DATA_CFG and SSE is enabled. If SSE is not enabled, the fields will contain zeroes. XMM8-XMM15 will also contain zeroes if not in 64-bit mode.

Table 20-96. XMMs

Field Name	Bit Width
XMM0	[127:0]
…	…
XMM15	[127:0]

20.9.2.2.5 LBRs

To capture LBR data in the PEBS record, the LBR bit in MSR_PEBS_DATA_CFG must be enabled. The number of LBR entries included in the record can be configured in the LBR_entries field of MSR_PEBS_DATA_CFG.

Table 20-97. LBRs

Field Name	Bit Width	Description
LBR[].FROM	[63:0]	Branch from address.
LBR[].TO	[63:0]	Branch to address.
LBR[].INFO	[63:0]	Other LBR information, like timing. This field is described in more detail in Section 18.12.1, "MSR_LBR_INFO_x MSR".

LBR entries are recorded into the record starting at LBR[TOS] and proceeding to LBR[TOS-1] and following. Note that LBR index is modulo the number of LBRs supporting on the processor.

20.9.2.3 MSR_PEBS_DATA_CFG

Bits in MSR_PEBS_DATA_CFG can be set to include data field blocks/groups into adaptive records. The Basic Info group is always included in the record. Additionally, the number of LBR entries included in the record is configurable.

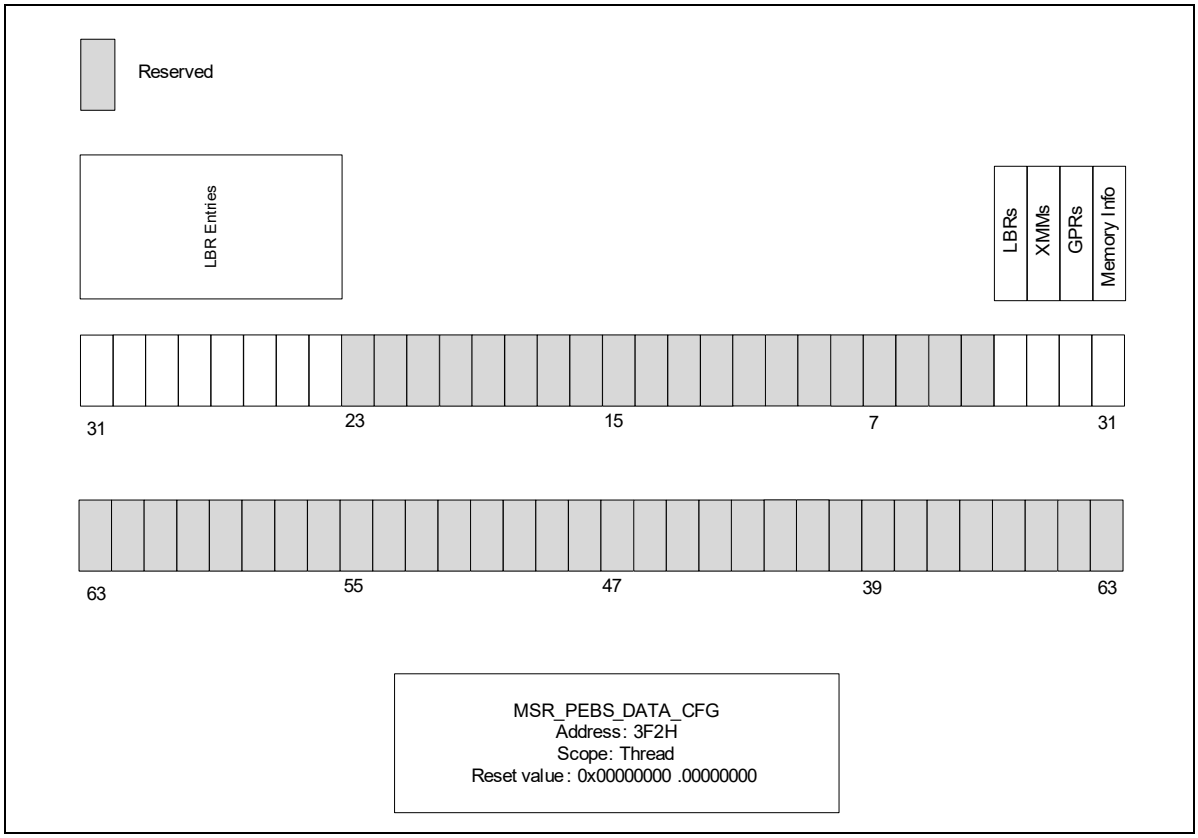

Figure 20-70. MSR_PEBS_DATA_CFG

Table 20-98. MSR_PEBS_CFG Programming[1]

Bit	Bit Index	Access	Description
Memory Info	0	R/W	Setting this bit will capture memory information such as the linear address, data source and latency of the memory access in the PEBS record.
GPRs	1	R/W	Setting this bit will capture the contents of the General Purpose registers in the PEBS record.
XMMs	2	R/W	Setting this bit will capture the contents of the XMM registers in the PEBS record.
LBRs	3	R/W	Setting this bit will capture LBR TO, FROM, and INFO in the PEBS record.
Reserved[2]	23:4	NA	Reserved
LBR Entries	31:24	R/W	Set the field to the desired number of entries minus 1. For example, if the LBR_entries field is 0, a single entry will be included in the record. To include 32 LBR entries, set the LBR_entries field to 31 (0x1F). To ensure all PEBS records are 16-byte aligned, it is recommended to select an even number of LBR entries (programmed into LBR_entries as an odd number).

NOTES:

1. A write to the MSR will be ignored when IA32_MISC_ENABLE.PERFMON_AVAILABLE is zero (default).
2. Writing to the reserved bits will cause a GP fault.

20.9.2.4 PEBS Record Examples

The following example shows the layout of the PEBS record when all data groups are selected (all valid bits in MSR_PEBS_DATA_CFG are set) and maximum number of LBRs are selected. There are no gaps in the PEBS record when a subset of the groups are selected, thus keeping the layout compact. Implementations that do not support some features will have to pad zeroes in the corresponding fields.

Table 20-99. PEBS Record Example 1

Offset	Group Name	Field Name	Legacy Name (If Different)
0x0	Basic Info	Record Format	New
		Record Size	New
0x8		Instruction Pointer	EventingRIP
0x10		Applicable Counters	
0x18		TSC	
0x20	Memory Info	Memory Access Address	DLA
0x28		Memory Auxiliary Info	DATA_SRC
0x30		Memory Access Latency	Load Latency
0x38		TSX Auxiliary Info	HLE Information

Table 20-99. PEBS Record Example 1

0x40	GPRs	RFLAGS	
0x48		RIP	
0x50		RAX	
...		...	
0x88		RDI	
0x90		R8	
...		...	
0xC8		R15	
0xD0	XMMs	XMM0	New
...		...	
0x1C0		XMM15	
0x1D0	LBRs	LBR[TOS].FROM	New
0x1D8		LBR[TOS].TO	
0x1E0		LBR[TOS].INFO	
...		...	
0x4B8		LBR[TOS +1].FROM	
0x4C0		LBR[TOS +1].TO	
0x4C8		LBR[TOS +1].INFO	

The following example shows the layout of the PEBS record when Basic, GPR, and LBR group with 3 LBR entries are selected.

Table 20-100. PEBS Record Example 2

Offset	Group Name	Field Name	Legacy Name (If Different)
0x0	Basic Info	Record Format	New
		Record Size	New
0x8		Instruction Pointer	EventingRIP
0x10		Applicable Counters	
0x18		TSC	

Table 20-100. PEBS Record Example 2

0x20	GPRs	RFLAGS	
0x28		RIP	
0x30		RAX	
...		...	
0x68		RDI	
0x70		R8	
...		...	
0xA8		R15	
0xB0	LBRs	LBR[TOS].FROM	New
0xB8		LBR[TOS].TO	
0xC0		LBR[TOS].INFO	
...		...	
0xE0		LBR[TOS +1].FROM	
0xE8		LBR[TOS +1].TO	
0xF0		LBR[TOS +1].INFO	

20.9.3 Precise Distribution of Instructions Retired (PDIR) Facility

Precise Distribution of Instructions Retired Facility is available via PEBS on some microarchitectures. Refer to Section 20.3.4.4.4. Counters that support PDIR also vary. See the processor specific sections for availability.

20.9.4 Reduced Skid PEBS

For precise events, upon triggering a PEBS assist, there will be a finite delay between the time the counter overflows and when the microcode starts to carry out its data collection obligations. The Reduced Skid mechanism mitigates the "skid" problem by providing an early indication of when the counter is about to overflow, allowing the machine to more precisely trap on the instruction that actually caused the counter overflow thus greatly reducing skid.

This mechanism is a superset of the PDIR mechanism available in the Sandy Bridge microarchitecture. See Section 20.3.4.4.4

In the Goldmont microarchitecture, the mechanism applies to all precise events including, INST_RETIRED, except for UOPS_RETIRED. However, the Reduced Skid mechanism is disabled for any counter when the INV, ANY, E, or CMASK fields are set.

With Reduced Skid PEBS, the skid is precisely one event occurrence. Hence if counting INST_RETIRED, PEBS will indicate the instruction that follows that which caused the counter to overflow.

For the Reduced Skid mechanism to operate correctly, the performance monitoring counters should not be reconfigured or modified when they are running with PEBS enabled. The counters need to be disabled (e.g., via IA32_PERF_GLOBAL_CTRL MSR) before changes to the configuration (e.g., what event is specified in IA32_PERFEVTSELx or whether PEBS is enabled for that counter via IA32_PEBS_ENABLE) or counter value (MSR write to IA32_PMCx and IA32_A_PMCx).

20.9.5 EPT-Friendly PEBS

The 3rd generation Intel Xeon Scalable Family of processors based on Ice Lake microarchitecture (and later processors) and the 12th generation Intel Core processor (and later processors) support VMX guest use of PEBS when the DS Area (including the PEBS Buffer and DS Management Area) is allocated from a paged pool of EPT pages. In such a configuration PEBS DS Area accesses may result in VM exits (e.g., EPT violations due to "lazy" EPT page-table entry propagation), and in such cases the PEBS record will not be lost but instead will "skid" to after the subsequent VM Entry back to the guest. For precise events the guest will observe that the record skid by one event occurrence, while for non-precise events the record will skid by one instruction.

20.9.6 PDist: Precise Distribution

PDist eliminates any skid or shadowing effects from PEBS. With PDist, the PEBS record will be generated precisely upon completion of the instruction or operation that causes the counter to overflow (there is no "wait for next occurrence" by default).

PDist is supported by selected counters, and is only supported when those counters are programmed to count select precise events[1]. The legacy PEBS behavior applies to counters that do not support PDist, unless specified otherwise. PDist requires that the INV, ANY, E, and CMASK fields are cleared. Which counters support PDist, and which events are supported for PDist, is model-specific. Further, the counter reload value must not be lesser than 127 for PDist to operate.

For the PDist mechanism to operate correctly, the performance monitoring counters should not be reconfigured or modified when they are running with PEBS enabled. The counters need to be disabled (e.g., via IA32_PERF_GLOBAL_CTRL MSR) before changes to the configuration (e.g., what event is specified in IA32_PERFEVTSELx or whether PEBS is enabled for that counter via IA32_PEBS_ENABLE) or counter value (MSR write to IA32_PMCx and IA32_A_PMCx).

20.9.7 Load Latency Facility

The load latency facility provides software a means to characterize the latencies of memory load operations to different levels of cache/memory hierarchy. This facility requires a processor supporting the enhanced PEBS record format in the PEBS buffer.

Beginning with 12th generation Intel Core processors, the load latency facility supports all fields in Table 20-94, "*Updated Memory Access Info Group*", in addition to the Memory Access Address field:

- The **Instruction Latency** field measures the load latency from the load's first dispatch until final data writeback from the memory subsystem. The latency is reported for retired demand load operations and in core cycles (it accounts for re-dispatches and data dependencies).
- The **Cache Latency** field measures the subset of cache access latency in core cycles. It starts from the actual cache access until the data is returned by the memory subsystem The latency is reported for retired demand load operations in core cycles (it does not account for memory ordering blocks).
- The **Data Source** field is an encoded value indicates the origin of the data obtained by the load instruction. The encoding is shown in Table 20-101. In the descriptions, local memory refers to system memory physically attached to a processor package, and remote memory refers to system memory or cache physically attached to another processor package (in a server product).
- Through the **Access Info** field, load latency features binary indications on certain blocks that the load operation may have encountered. Refer to STLB-miss, Is-Lock, Data-Blk and Address-Blk fields in Table 20-94.

NOTE

For loads triggered by software prefetch instructions, the cache related fields including Data Source and Cache Latency, report values as if the load was an L1 cache hit (the prefetch completes without waiting for data return, for performance reasons).

1. To determine whether an event is precise or supports PDist, consult the relevant attribute in the event lists at https://download.01.org/perfmon/.

Table 20-101. Data Source Encoding for Memory Accesses (Ice Lake and Later Microarchitectures)

Encoding	Description
00H	Unknown Data Source (the processor could not retrieve the origin of this request).
01H	L1 HIT. This request was satisfied by the L1 data cache. (Minimal latency core cache hit.)
02H	FB HIT. This request was merged into an outstanding cache miss to same cache-line address.
03H	L2 HIT. This request was satisfied by the L2 cache.
04H	L3 HIT. This request was satisfied by the L3 cache with no coherency actions performed (snooping).
05H	XCORE MISS. This request was satisfied by the L3 cache but involved a coherency check in some sibling core(s).
06H	XCORE HIT. This request was satisfied by the L3 cache but involved a coherency check that hit a non-modified copy in a sibling core.
07H	XCORE FWD. This request was satisfied by a sibling core where either a modified (cross-core HITM) or a non-modified (cross-core FWD) cache-line copy was found.
08H	Local Far Memory. This request has missed the L3 cache and was serviced by local far memory.
09H	Remote Far Memory. This request has missed the L3 cache and was serviced by remote far memory.
0AH	Local Near Memory. This request has missed the L3 cache and was serviced by local near memory.
0BH	Remote Near Memory. This request has missed the L3 cache and was serviced by remote near memory.
0CH	Remote FWD. This request has missed the L3 cache and a non-modified cache-line copy was forwarded from a remote cache.
0DH	Remote HITM. This request has missed the L3 cache and a modified cache-line was forwarded from a remote cache.
0EH	I/O. Request of input/output operation.
0FH	UC. The request was to uncacheable memory.

To use this feature, software must complete the following steps:

- Complete the PEBS configuration steps.
- Set the Memory Info bit in the PEBS_DATA_CFG MSR.
- One of the relevant IA32_PERFEVTSELx MSRs is programmed to specify the event unit MEM_TRANS_RETIRED.LOAD_LATENCY (IA32_PerfEvtSelX[15:0] = 1CDH). The corresponding counter, IA32_PMCx, will accumulate event counts for architecturally visible loads which exceed the programmed latency threshold specified separately in an MSR. Stores are ignored when this event is programmed. The CMASK or INV fields of the IA32_PerfEvtSelX register used for counting load latency must be 0. Writing other values will result in undefined behavior.
- The MSR_PEBS_LD_LAT_THRESHOLD MSR is programmed with the desired latency threshold in core clock cycles. Loads with instruction latency greater than this value are eligible for counting and PEBS data reporting. The minimum value that may be programmed in this register is 1.
- The PEBS enable bit in the IA32_PEBS_ENABLE register is set for the corresponding IA32_PMCx counter register.

Refer to Section 20.3.4.4.2 for further implementation details of Load Latency.

20.9.8 Store Latency Facility

Store latency support is available on the 12th generation Intel Core processor. Store latency is a PEBS extension that provides a means to profile store memory accesses in the system. It complements the load latency facility.

Store latency leverages the PEBS facility where it can provide additional information about sampled stores. The additional information includes the data address, memory auxiliary information, and the cache latency of the store access. Normal stores (those preceded with a read-for-ownership) as well as streaming stores are supported by the store latency facility.

Memory store operations typically do not limit performance since they update the memory with no operation that directly depends on them. Thus, data out of this facility should be carefully used once stores are suspected as a performance limiter; for example, once the TMA node of Backend_Bound.Memory_Bound.Store_Bound is flagged[1].

To enable the store latency facility, software must complete the following steps:

- Complete the PEBS configuration steps.
- Set the Memory Info bit in the PEBS_DATA_CFG MSR.
- Program the MEM_TRANS_RETIRED.STORE_SAMPLE event on general-purpose performance-monitoring counter 0 (IA32_PERFEVTSEL0[15:0] = 2CDH).
- Setup the PEBS buffer to hold at least two records, setting both 'PEBS Absolute Maximum' and 'PEBS Interrupt Threshold', should any other counter be used by PEBS (that is whenever IA32_PEBS_ENABLE[x] ≠ 0 for x ≠ 0).
- Set IA32_PEBS_ENABLE[0].

The store latency information is written into a PEBS record as shown in Table 20-48.

The store latency relies on the PEBS facility, so the PEBS configuration must be completed first. Unlike load latency, there is no option to filter on a subset of stores that exceed a certain threshold.

1. For more details about the method, refer to Section B.1, "Top-Down Analysis Method" of the *Intel® 64 and IA-32 Architectures Optimization Reference Manual*.

CHAPTER 21
8086 EMULATION

IA-32 processors (beginning with the Intel386 processor) provide two ways to execute new or legacy programs that are assembled and/or compiled to run on an Intel 8086 processor:

- Real-address mode.
- Virtual-8086 mode.

Figure 2-3 shows the relationship of these operating modes to protected mode and system management mode (SMM).

When the processor is powered up or reset, it is placed in the real-address mode. This operating mode almost exactly duplicates the execution environment of the Intel 8086 processor, with some extensions. Virtually any program assembled and/or compiled to run on an Intel 8086 processor will run on an IA-32 processor in this mode.

When running in protected mode, the processor can be switched to virtual-8086 mode to run 8086 programs. This mode also duplicates the execution environment of the Intel 8086 processor, with extensions. In virtual-8086 mode, an 8086 program runs as a separate protected-mode task. Legacy 8086 programs are thus able to run under an operating system (such as Microsoft Windows*) that takes advantage of protected mode and to use protected-mode facilities, such as the protected-mode interrupt- and exception-handling facilities. Protected-mode multitasking permits multiple virtual-8086 mode tasks (with each task running a separate 8086 program) to be run on the processor along with other non-virtual-8086 mode tasks.

This section describes both the basic real-address mode execution environment and the virtual-8086-mode execution environment, available on the IA-32 processors beginning with the Intel386 processor.

21.1 REAL-ADDRESS MODE

The IA-32 architecture's real-address mode runs programs written for the Intel 8086, Intel 8088, Intel 80186, and Intel 80188 processors, or for the real-address mode of the Intel 286, Intel386, Intel486, Pentium, P6 family, Pentium 4, and Intel Xeon processors.

The execution environment of the processor in real-address mode is designed to duplicate the execution environment of the Intel 8086 processor. To an 8086 program, a processor operating in real-address mode behaves like a high-speed 8086 processor. The principal features of this architecture are defined in Chapter 3, "Basic Execution Environment", of the *Intel® 64 and IA-32 Architectures Software Developer's Manual, Volume 1*.

The following is a summary of the core features of the real-address mode execution environment as would be seen by a program written for the 8086:

- The processor supports a nominal 1-MByte physical address space (see Section 21.1.1, "Address Translation in Real-Address Mode", for specific details). This address space is divided into segments, each of which can be up to 64 KBytes in length. The base of a segment is specified with a 16-bit segment selector, which is shifted left by 4 bits to form a 20-bit offset from address 0 in the address space. An operand within a segment is addressed with a 16-bit offset from the base of the segment. A physical address is thus formed by adding the offset to the 20-bit segment base (see Section 21.1.1, "Address Translation in Real-Address Mode").
- All operands in "native 8086 code" are 8-bit or 16-bit values. (Operand size override prefixes can be used to access 32-bit operands.)
- Eight 16-bit general-purpose registers are provided: AX, BX, CX, DX, SP, BP, SI, and DI. The extended 32 bit registers (EAX, EBX, ECX, EDX, ESP, EBP, ESI, and EDI) are accessible to programs that explicitly perform a size override operation.
- Four segment registers are provided: CS, DS, SS, and ES. (The FS and GS registers are accessible to programs that explicitly access them.) The CS register contains the segment selector for the code segment; the DS and ES registers contain segment selectors for data segments; and the SS register contains the segment selector for the stack segment.
- The 8086 16-bit instruction pointer (IP) is mapped to the lower 16-bits of the EIP register. Note this register is a 32-bit register and unintentional address wrapping may occur.

- The 16-bit FLAGS register contains status and control flags. (This register is mapped to the 16 least significant bits of the 32-bit EFLAGS register.)
- All of the Intel 8086 instructions are supported (see Section 21.1.3, "Instructions Supported in Real-Address Mode").
- A single, 16-bit-wide stack is provided for handling procedure calls and invocations of interrupt and exception handlers. This stack is contained in the stack segment identified with the SS register. The SP (stack pointer) register contains an offset into the stack segment. The stack grows down (toward lower segment offsets) from the stack pointer. The BP (base pointer) register also contains an offset into the stack segment that can be used as a pointer to a parameter list. When a CALL instruction is executed, the processor pushes the current instruction pointer (the 16 least-significant bits of the EIP register and, on far calls, the current value of the CS register) onto the stack. On a return, initiated with a RET instruction, the processor pops the saved instruction pointer from the stack into the EIP register (and CS register on far returns). When an implicit call to an interrupt or exception handler is executed, the processor pushes the EIP, CS, and EFLAGS (low-order 16-bits only) registers onto the stack. On a return from an interrupt or exception handler, initiated with an IRET instruction, the processor pops the saved instruction pointer and EFLAGS image from the stack into the EIP, CS, and EFLAGS registers.
- A single interrupt table, called the "interrupt vector table" or "interrupt table," is provided for handling interrupts and exceptions (see Figure 21-2). The interrupt table (which has 4-byte entries) takes the place of the interrupt descriptor table (IDT, with 8-byte entries) used when handling protected-mode interrupts and exceptions. Interrupt and exception vector numbers provide an index to entries in the interrupt table. Each entry provides a pointer (called a "vector") to an interrupt- or exception-handling procedure. See Section 21.1.4, "Interrupt and Exception Handling", for more details. It is possible for software to relocate the IDT by means of the LIDT instruction on IA-32 processors beginning with the Intel386 processor.
- The x87 FPU is active and available to execute x87 FPU instructions in real-address mode. Programs written to run on the Intel 8087 and Intel 287 math coprocessors can be run in real-address mode without modification.

The following extensions to the Intel 8086 execution environment are available in the IA-32 architecture's real-address mode. If backwards compatibility to Intel 286 and Intel 8086 processors is required, these features should not be used in new programs written to run in real-address mode.

- Two additional segment registers (FS and GS) are available.
- Many of the integer and system instructions that have been added to later IA-32 processors can be executed in real-address mode (see Section 21.1.3, "Instructions Supported in Real-Address Mode").
- The 32-bit operand prefix can be used in real-address mode programs to execute the 32-bit forms of instructions. This prefix also allows real-address mode programs to use the processor's 32-bit general-purpose registers.
- The 32-bit address prefix can be used in real-address mode programs, allowing 32-bit offsets.

The following sections describe address formation, registers, available instructions, and interrupt and exception handling in real-address mode. For information on I/O in real-address mode, see Chapter 19, "Input/Output", of the *Intel® 64 and IA-32 Architectures Software Developer's Manual, Volume 1*.

21.1.1 Address Translation in Real-Address Mode

In real-address mode, the processor does not interpret segment selectors as indexes into a descriptor table; instead, it uses them directly to form linear addresses as the 8086 processor does. It shifts the segment selector left by 4 bits to form a 20-bit base address (see Figure 21-1). The offset into a segment is added to the base address to create a linear address that maps directly to the physical address space.

When using 8086-style address translation, it is possible to specify addresses larger than 1 MByte. For example, with a segment selector value of FFFFH and an offset of FFFFH, the linear (and physical) address would be 10FFEFH (1 megabyte plus 64 KBytes). The 8086 processor, which can form addresses only up to 20 bits long, truncates the high-order bit, thereby "wrapping" this address to FFEFH. When operating in real-address mode, however, the processor does not truncate such an address and uses it as a physical address. (Note, however, that for IA-32 processors beginning with the Intel486 processor, the A20M# signal can be used in real-address mode to mask address line A20, thereby mimicking the 20-bit wrap-around behavior of the 8086 processor.) Care should be take to ensure that A20M# based address wrapping is handled correctly in multiprocessor based system.

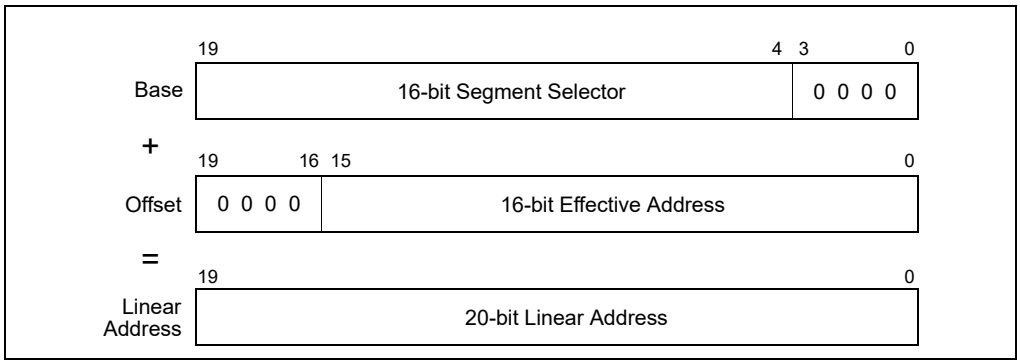

Figure 21-1. Real-Address Mode Address Translation

The IA-32 processors beginning with the Intel386 processor can generate 32-bit offsets using an address override prefix; however, in real-address mode, the value of a 32-bit offset may not exceed FFFFH without causing an exception.

For full compatibility with Intel 286 real-address mode, pseudo-protection faults (interrupt 12 or 13) occur if a 32-bit offset is generated outside the range 0 through FFFFH.

21.1.2 Registers Supported in Real-Address Mode

The register set available in real-address mode includes all the registers defined for the 8086 processor plus the new registers introduced in later IA-32 processors, such as the FS and GS segment registers, the debug registers, the control registers, and the floating-point unit registers. The 32-bit operand prefix allows a real-address mode program to use the 32-bit general-purpose registers (EAX, EBX, ECX, EDX, ESP, EBP, ESI, and EDI).

21.1.3 Instructions Supported in Real-Address Mode

The following instructions make up the core instruction set for the 8086 processor. If backwards compatibility to the Intel 286 and Intel 8086 processors is required, only these instructions should be used in a new program written to run in real-address mode.

- Move (MOV) instructions that move operands between general-purpose registers, segment registers, and between memory and general-purpose registers.
- The exchange (XCHG) instruction.
- Load segment register instructions LDS and LES.
- Arithmetic instructions ADD, ADC, SUB, SBB, MUL, IMUL, DIV, IDIV, INC, DEC, CMP, and NEG.
- Logical instructions AND, OR, XOR, and NOT.
- Decimal instructions DAA, DAS, AAA, AAS, AAM, and AAD.
- Stack instructions PUSH and POP (to general-purpose registers and segment registers).
- Type conversion instructions CWD, CDQ, CBW, and CWDE.
- Shift and rotate instructions SAL, SHL, SHR, SAR, ROL, ROR, RCL, and RCR.
- TEST instruction.
- Control instructions JMP, J*cc*, CALL, RET, LOOP, LOOPE, and LOOPNE.
- Interrupt instructions INT *n*, INTO, and IRET.
- EFLAGS control instructions STC, CLC, CMC, CLD, STD, LAHF, SAHF, PUSHF, and POPF.
- I/O instructions IN, INS, OUT, and OUTS.
- Load effective address (LEA) instruction, and translate (XLATB) instruction.

- LOCK prefix.
- Repeat prefixes REP, REPE, REPZ, REPNE, and REPNZ.
- Processor halt (HLT) instruction.
- No operation (NOP) instruction.

The following instructions, added to later IA-32 processors (some in the Intel 286 processor and the remainder in the Intel386 processor), can be executed in real-address mode, if backwards compatibility to the Intel 8086 processor is not required.

- Move (MOV) instructions that operate on the control and debug registers.
- Load segment register instructions LSS, LFS, and LGS.
- Generalized multiply instructions and multiply immediate data.
- Shift and rotate by immediate counts.
- Stack instructions PUSHA, PUSHAD, POPA, POPAD, and PUSH immediate data.
- Move with sign extension instructions MOVSX and MOVZX.
- Long-displacement J*cc* instructions.
- Exchange instructions CMPXCHG, CMPXCHG8B, and XADD.
- String instructions MOVS, CMPS, SCAS, LODS, and STOS.
- Bit test and bit scan instructions BT, BTS, BTR, BTC, BSF, and BSR; the byte-set-on condition instruction SET*cc*; and the byte swap (BSWAP) instruction.
- Double shift instructions SHLD and SHRD.
- EFLAGS control instructions PUSHF and POPF.
- ENTER and LEAVE control instructions.
- BOUND instruction.
- CPU identification (CPUID) instruction.
- System instructions CLTS, INVD, WINVD, INVLPG, LGDT, SGDT, LIDT, SIDT, LMSW, SMSW, RDMSR, WRMSR, RDTSC, and RDPMC.

Execution of any of the other IA-32 architecture instructions (not given in the previous two lists) in real-address mode result in an invalid-opcode exception (#UD) being generated.

21.1.4 Interrupt and Exception Handling

When operating in real-address mode, software must provide interrupt and exception-handling facilities that are separate from those provided in protected mode. Even during the early stages of processor initialization when the processor is still in real-address mode, elementary real-address mode interrupt and exception-handling facilities must be provided to ensure reliable operation of the processor, or the initialization code must ensure that no interrupts or exceptions will occur.

The IA-32 processors handle interrupts and exceptions in real-address mode similar to the way they handle them in protected mode. When a processor receives an interrupt or generates an exception, it uses the vector number of the interrupt or exception as an index into the interrupt table. (In protected mode, the interrupt table is called the **interrupt descriptor table (IDT)**, but in real-address mode, the table is usually called the **interrupt vector table**, or simply the **interrupt table**.) The entry in the interrupt vector table provides a pointer to an interrupt- or exception-handler procedure. (The pointer consists of a segment selector for a code segment and a 16-bit offset into the segment.) The processor performs the following actions to make an implicit call to the selected handler:

1. Pushes the current values of the CS and EIP registers onto the stack. (Only the 16 least-significant bits of the EIP register are pushed.)
2. Pushes the low-order 16 bits of the EFLAGS register onto the stack.
3. Clears the IF flag in the EFLAGS register to disable interrupts.
4. Clears the TF, RF, and AC flags, in the EFLAGS register.

5. Transfers program control to the location specified in the interrupt vector table.

An IRET instruction at the end of the handler procedure reverses these steps to return program control to the interrupted program. Exceptions do not return error codes in real-address mode.

The interrupt vector table is an array of 4-byte entries (see Figure 21-2). Each entry consists of a far pointer to a handler procedure, made up of a segment selector and an offset. The processor scales the interrupt or exception vector by 4 to obtain an offset into the interrupt table. Following reset, the base of the interrupt vector table is located at physical address 0 and its limit is set to 3FFH. In the Intel 8086 processor, the base address and limit of the interrupt vector table cannot be changed. In the later IA-32 processors, the base address and limit of the interrupt vector table are contained in the IDTR register and can be changed using the LIDT instruction.

(For backward compatibility to Intel 8086 processors, the default base address and limit of the interrupt vector table should not be changed.)

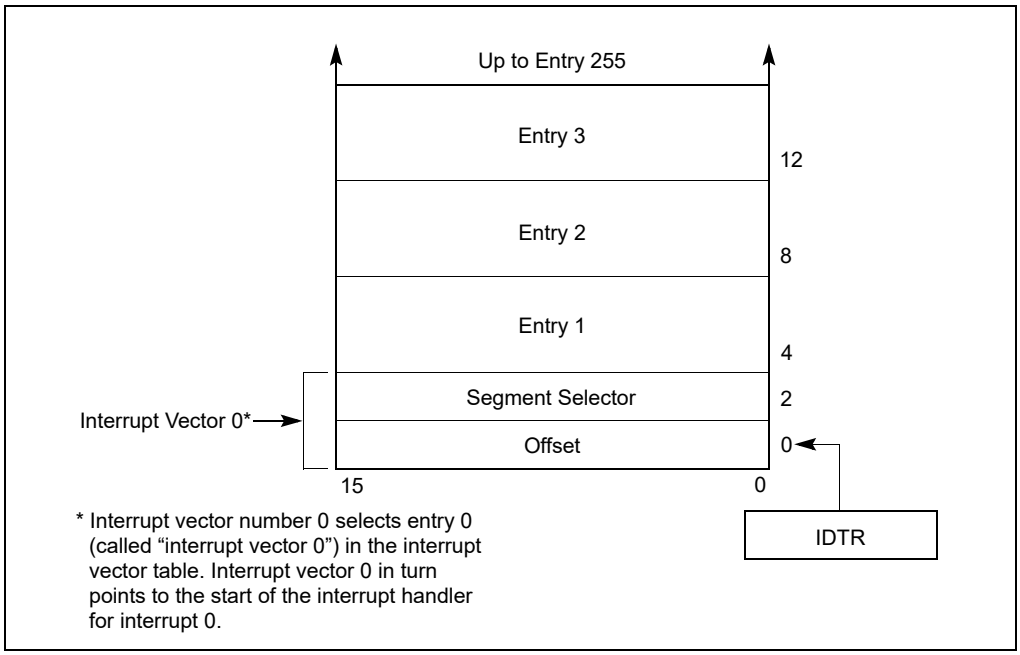

Figure 21-2. Interrupt Vector Table in Real-Address Mode

Table 21-1 shows the interrupt and exception vectors that can be generated in real-address mode and virtual-8086 mode, and in the Intel 8086 processor. See Chapter 6, “Interrupt and Exception Handling”, for a description of the exception conditions.

21.2 VIRTUAL-8086 MODE

Virtual-8086 mode is actually a special type of a task that runs in protected mode. When the operating-system or executive switches to a virtual-8086-mode task, the processor emulates an Intel 8086 processor. The execution environment of the processor while in the 8086-emulation state is the same as is described in Section 21.1, “Real-Address Mode” for real-address mode, including the extensions. The major difference between the two modes is that in virtual-8086 mode the 8086 emulator uses some protected-mode services (such as the protected-mode interrupt and exception-handling and paging facilities).

As in real-address mode, any new or legacy program that has been assembled and/or compiled to run on an Intel 8086 processor will run in a virtual-8086-mode task. And several 8086 programs can be run as virtual-8086-mode tasks concurrently with normal protected-mode tasks, using the processor's multitasking facilities.

Table 21-1. Real-Address Mode Exceptions and Interrupts

Vector No.	Description	Real-Address Mode	Virtual-8086 Mode	Intel 8086 Processor
0	Divide Error (#DE)	Yes	Yes	Yes
1	Debug Exception (#DB)	Yes	Yes	No
2	NMI Interrupt	Yes	Yes	Yes
3	Breakpoint (#BP)	Yes	Yes	Yes
4	Overflow (#OF)	Yes	Yes	Yes
5	BOUND Range Exceeded (#BR)	Yes	Yes	Reserved
6	Invalid Opcode (#UD)	Yes	Yes	Reserved
7	Device Not Available (#NM)	Yes	Yes	Reserved
8	Double Fault (#DF)	Yes	Yes	Reserved
9	(Intel reserved. Do not use.)	Reserved	Reserved	Reserved
10	Invalid TSS (#TS)	Reserved	Yes	Reserved
11	Segment Not Present (#NP)	Reserved	Yes	Reserved
12	Stack Fault (#SS)	Yes	Yes	Reserved
13	General Protection (#GP)*	Yes	Yes	Reserved
14	Page Fault (#PF)	Reserved	Yes	Reserved
15	(Intel reserved. Do not use.)	Reserved	Reserved	Reserved
16	Floating-Point Error (#MF)	Yes	Yes	Reserved
17	Alignment Check (#AC)	Reserved	Yes	Reserved
18	Machine Check (#MC)	Yes	Yes	Reserved
19-31	(Intel reserved. Do not use.)	Reserved	Reserved	Reserved
32-255	User Defined Interrupts	Yes	Yes	Yes

NOTE:

* In the real-address mode, vector 13 is the segment overrun exception. In protected and virtual-8086 modes, this exception covers all general-protection error conditions, including traps to the virtual-8086 monitor from virtual-8086 mode.

21.2.1 Enabling Virtual-8086 Mode

The processor runs in virtual-8086 mode when the VM (virtual machine) flag in the EFLAGS register is set. This flag can only be set when the processor switches to a new protected-mode task or resumes virtual-8086 mode via an IRET instruction.

System software cannot change the state of the VM flag directly in the EFLAGS register (for example, by using the POPFD instruction). Instead it changes the flag in the image of the EFLAGS register stored in the TSS or on the stack following a call to an interrupt- or exception-handler procedure. For example, software sets the VM flag in the EFLAGS image in the TSS when first creating a virtual-8086 task.

The processor tests the VM flag under three general conditions:

- When loading segment registers, to determine whether to use 8086-style address translation.
- When decoding instructions, to determine which instructions are not supported in virtual-8086 mode and which instructions are sensitive to IOPL.

- When checking privileged instructions, on page accesses, or when performing other permission checks. (Virtual-8086 mode always executes at CPL 3.)

21.2.2 Structure of a Virtual-8086 Task

A virtual-8086-mode task consists of the following items:

- A 32-bit TSS for the task.
- The 8086 program.
- A virtual-8086 monitor.
- 8086 operating-system services.

The TSS of the new task must be a 32-bit TSS, not a 16-bit TSS, because the 16-bit TSS does not load the most-significant word of the EFLAGS register, which contains the VM flag. All TSS's, stacks, data, and code used to handle exceptions when in virtual-8086 mode must also be 32-bit segments.

The processor enters virtual-8086 mode to run the 8086 program and returns to protected mode to run the virtual-8086 monitor.

The virtual-8086 monitor is a 32-bit protected-mode code module that runs at a CPL of 0. The monitor consists of initialization, interrupt- and exception-handling, and I/O emulation procedures that emulate a personal computer or other 8086-based platform. Typically, the monitor is either part of or closely associated with the protected-mode general-protection (#GP) exception handler, which also runs at a CPL of 0. As with any protected-mode code module, code-segment descriptors for the virtual-8086 monitor must exist in the GDT or in the task's LDT. The virtual-8086 monitor also may need data-segment descriptors so it can examine the IDT or other parts of the 8086 program in the first 1 MByte of the address space. The linear addresses above 10FFEFH are available for the monitor, the operating system, and other system software.

The 8086 operating-system services consists of a kernel and/or operating-system procedures that the 8086 program makes calls to. These services can be implemented in either of the following two ways:

- They can be included in the 8086 program. This approach is desirable for either of the following reasons:
  - The 8086 program code modifies the 8086 operating-system services.
  - There is not sufficient development time to merge the 8086 operating-system services into main operating system or executive.
- They can be implemented or emulated in the virtual-8086 monitor. This approach is desirable for any of the following reasons:
  - The 8086 operating-system procedures can be more easily coordinated among several virtual-8086 tasks.
  - Memory can be saved by not duplicating 8086 operating-system procedure code for several virtual-8086 tasks.
  - The 8086 operating-system procedures can be easily emulated by calls to the main operating system or executive.

The approach chosen for implementing the 8086 operating-system services may result in different virtual-8086-mode tasks using different 8086 operating-system services.

21.2.3 Paging of Virtual-8086 Tasks

Even though a program running in virtual-8086 mode can use only 20-bit linear addresses, the processor converts these addresses into 32-bit linear addresses before mapping them to the physical address space. If paging is being used, the 8086 address space for a program running in virtual-8086 mode can be paged and located in a set of pages in physical address space. If paging is used, it is transparent to the program running in virtual-8086 mode just as it is for any task running on the processor.

Paging is not necessary for a single virtual-8086-mode task, but paging is useful or necessary in the following situations:

- When running multiple virtual-8086-mode tasks. Here, paging allows the lower 1 MByte of the linear address space for each virtual-8086-mode task to be mapped to a different physical address location.
- When emulating the 8086 address-wraparound that occurs at 1 MByte. When using 8086-style address translation, it is possible to specify addresses larger than 1 MByte. These addresses automatically wraparound in the Intel 8086 processor (see Section 21.1.1, "Address Translation in Real-Address Mode"). If any 8086 programs depend on address wraparound, the same effect can be achieved in a virtual-8086-mode task by mapping the linear addresses between 100000H and 110000H and linear addresses between 0 and 10000H to the same physical addresses.
- When sharing the 8086 operating-system services or ROM code that is common to several 8086 programs running as different 8086-mode tasks.
- When redirecting or trapping references to memory-mapped I/O devices.

21.2.4 Protection within a Virtual-8086 Task

Protection is not enforced between the segments of an 8086 program. Either of the following techniques can be used to protect the system software running in a virtual-8086-mode task from the 8086 program:

- Reserve the first 1 MByte plus 64 KBytes of each task's linear address space for the 8086 program. An 8086 processor task cannot generate addresses outside this range.
- Use the U/S flag of page-table entries to protect the virtual-8086 monitor and other system software in the virtual-8086 mode task space. When the processor is in virtual-8086 mode, the CPL is 3. Therefore, an 8086 processor program has only user privileges. If the pages of the virtual-8086 monitor have supervisor privilege, they cannot be accessed by the 8086 program.

21.2.5 Entering Virtual-8086 Mode

Figure 21-3 summarizes the methods of entering and leaving virtual-8086 mode. The processor switches to virtual-8086 mode in either of the following situations:

- Task switch when the VM flag is set to 1 in the EFLAGS register image stored in the TSS for the task. Here the task switch can be initiated in either of two ways:
  - A CALL or JMP instruction.
  - An IRET instruction, where the NT flag in the EFLAGS image is set to 1.
- Return from a protected-mode interrupt or exception handler when the VM flag is set to 1 in the EFLAGS register image on the stack.

When a task switch is used to enter virtual-8086 mode, the TSS for the virtual-8086-mode task must be a 32-bit TSS. (If the new TSS is a 16-bit TSS, the upper word of the EFLAGS register is not in the TSS, causing the processor to clear the VM flag when it loads the EFLAGS register.) The processor updates the VM flag prior to loading the segment registers from their images in the new TSS. The new setting of the VM flag determines whether the processor interprets the contents of the segment registers as 8086-style segment selectors or protected-mode segment selectors. When the VM flag is set, the segment registers are loaded from the TSS, using 8086-style address translation to form base addresses.

See Section 21.3, "Interrupt and Exception Handling in Virtual-8086 Mode", for information on entering virtual-8086 mode on a return from an interrupt or exception handler.

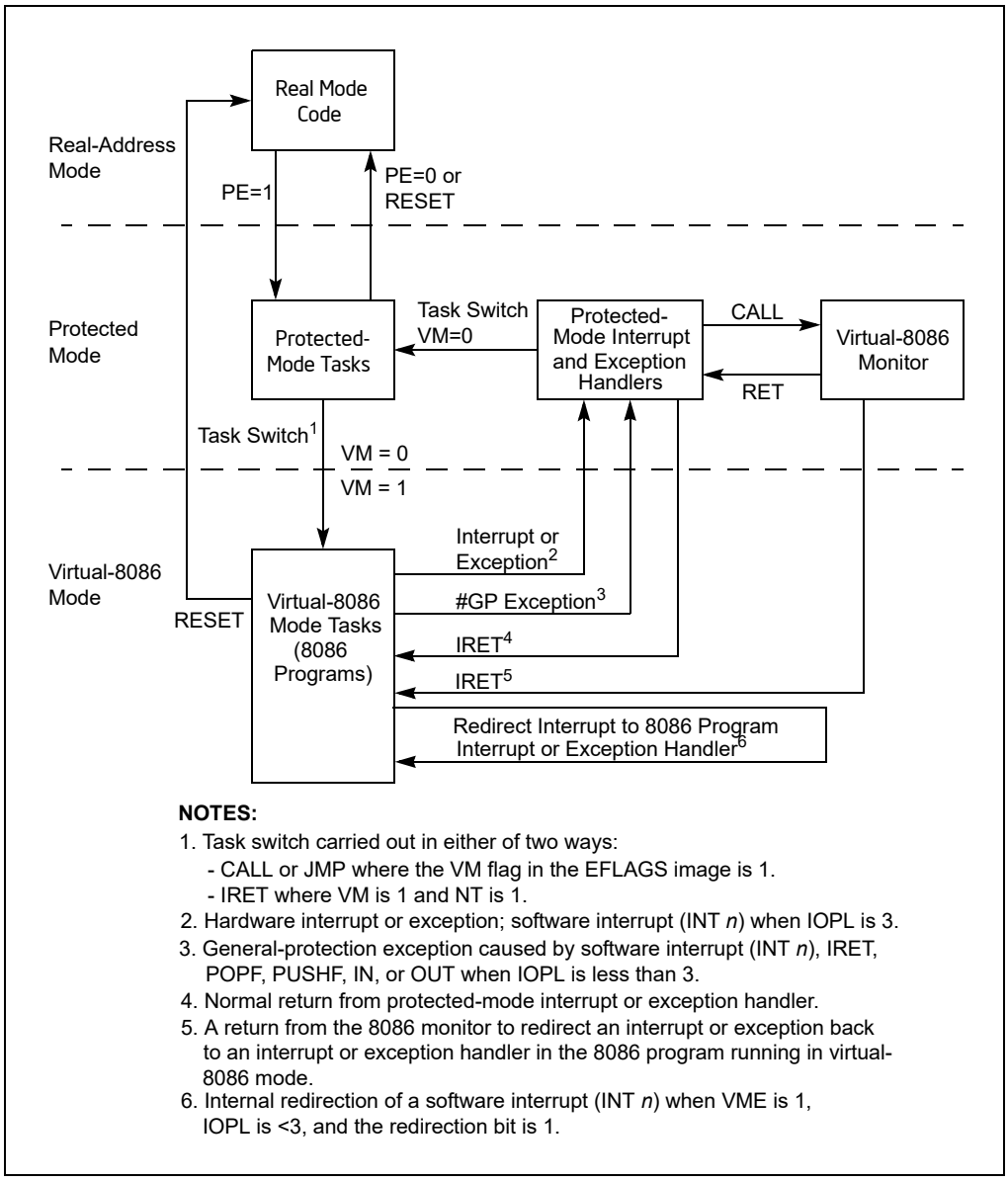

Figure 21-3. Entering and Leaving Virtual-8086 Mode

21.2.6 Leaving Virtual-8086 Mode

The processor can leave the virtual-8086 mode only through an interrupt or exception. The following are situations where an interrupt or exception will lead to the processor leaving virtual-8086 mode (see Figure 21-3):

- The processor services a hardware interrupt generated to signal the suspension of execution of the virtual-8086 application. This hardware interrupt may be generated by a timer or other external mechanism. Upon receiving the hardware interrupt, the processor enters protected mode and switches to a protected-mode (or another virtual-8086 mode) task either through a task gate in the protected-mode IDT or through a trap or interrupt gate that points to a handler that initiates a task switch. A task switch from a virtual-8086 task to another task loads the EFLAGS register from the TSS of the new task. The value of the VM flag in the new EFLAGS determines if the new task executes in virtual-8086 mode or not.
- The processor services an exception caused by code executing the virtual-8086 task or services a hardware interrupt that "belongs to" the virtual-8086 task. Here, the processor enters protected mode and services the

exception or hardware interrupt through the protected-mode IDT (normally through an interrupt or trap gate) and the protected-mode exception- and interrupt-handlers. The processor may handle the exception or interrupt within the context of the virtual 8086 task and return to virtual-8086 mode on a return from the handler procedure. The processor may also execute a task switch and handle the exception or interrupt in the context of another task.

- The processor services a software interrupt generated by code executing in the virtual-8086 task (such as a software interrupt to call a MS-DOS* operating system routine). The processor provides several methods of handling these software interrupts, which are discussed in detail in Section 21.3.3, "Class 3—Software Interrupt Handling in Virtual-8086 Mode". Most of them involve the processor entering protected mode, often by means of a general-protection (#GP) exception. In protected mode, the processor can send the interrupt to the virtual-8086 monitor for handling and/or redirect the interrupt back to the application program running in virtual-8086 mode task for handling.

  IA-32 processors that incorporate the virtual mode extension (enabled with the VME flag in control register CR4) are capable of redirecting software-generated interrupts back to the program's interrupt handlers without leaving virtual-8086 mode. See Section 21.3.3.4, "Method 5: Software Interrupt Handling", for more information on this mechanism.
- A hardware reset initiated by asserting the RESET or INIT pin is a special kind of interrupt. When a RESET or INIT is signaled while the processor is in virtual-8086 mode, the processor leaves virtual-8086 mode and enters real-address mode.
- Execution of the HLT instruction in virtual-8086 mode will cause a general-protection (GP#) fault, which the protected-mode handler generally sends to the virtual-8086 monitor. The virtual-8086 monitor then determines the correct execution sequence after verifying that it was entered as a result of a HLT execution.

See Section 21.3, "Interrupt and Exception Handling in Virtual-8086 Mode", for information on leaving virtual-8086 mode to handle an interrupt or exception generated in virtual-8086 mode.

21.2.7 Sensitive Instructions

When an IA-32 processor is running in virtual-8086 mode, the CLI, STI, PUSHF, POPF, INT *n*, and IRET instructions are sensitive to IOPL. The IN, INS, OUT, and OUTS instructions, which are sensitive to IOPL in protected mode, are not sensitive in virtual-8086 mode.

The CPL is always 3 while running in virtual-8086 mode; if the IOPL is less than 3, an attempt to use the IOPL-sensitive instructions listed above triggers a general-protection exception (#GP). These instructions are sensitive to IOPL to give the virtual-8086 monitor a chance to emulate the facilities they affect.

21.2.8 Virtual-8086 Mode I/O

Many 8086 programs written for non-multitasking systems directly access I/O ports. This practice may cause problems in a multitasking environment. If more than one program accesses the same port, they may interfere with each other. Most multitasking systems require application programs to access I/O ports through the operating system. This results in simplified, centralized control.

The processor provides I/O protection for creating I/O that is compatible with the environment and transparent to 8086 programs. Designers may take any of several possible approaches to protecting I/O ports:

- Protect the I/O address space and generate exceptions for all attempts to perform I/O directly.
- Let the 8086 program perform I/O directly.
- Generate exceptions on attempts to access specific I/O ports.
- Generate exceptions on attempts to access specific memory-mapped I/O ports.

The method of controlling access to I/O ports depends upon whether they are I/O-port mapped or memory mapped.

21.2.8.1 I/O-Port-Mapped I/O

The I/O permission bit map in the TSS can be used to generate exceptions on attempts to access specific I/O port addresses. The I/O permission bit map of each virtual-8086-mode task determines which I/O addresses generate exceptions for that task. Because each task may have a different I/O permission bit map, the addresses that generate exceptions for one task may be different from the addresses for another task. This differs from protected mode in which, if the CPL is less than or equal to the IOPL, I/O access is allowed without checking the I/O permission bit map. See Chapter 19, "Input/Output", in the *Intel® 64 and IA-32 Architectures Software Developer's Manual, Volume 1*, for more information about the I/O permission bit map.

21.2.8.2 Memory-Mapped I/O

In systems which use memory-mapped I/O, the paging facilities of the processor can be used to generate exceptions for attempts to access I/O ports. The virtual-8086 monitor may use paging to control memory-mapped I/O in these ways:

- Map part of the linear address space of each task that needs to perform I/O to the physical address space where I/O ports are placed. By putting the I/O ports at different addresses (in different pages), the paging mechanism can enforce isolation between tasks.
- Map part of the linear address space to pages that are not-present. This generates an exception whenever a task attempts to perform I/O to those pages. System software then can interpret the I/O operation being attempted.

Software emulation of the I/O space may require too much operating system intervention under some conditions. In these cases, it may be possible to generate an exception for only the first attempt to access I/O. The system software then may determine whether a program can be given exclusive control of I/O temporarily, the protection of the I/O space may be lifted, and the program allowed to run at full speed.

21.2.8.3 Special I/O Buffers

Buffers of intelligent controllers (for example, a bit-mapped frame buffer) also can be emulated using page mapping. The linear space for the buffer can be mapped to a different physical space for each virtual-8086-mode task. The virtual-8086 monitor then can control which virtual buffer to copy onto the real buffer in the physical address space.

21.3 INTERRUPT AND EXCEPTION HANDLING IN VIRTUAL-8086 MODE

When the processor receives an interrupt or detects an exception condition while in virtual-8086 mode, it invokes an interrupt or exception handler, just as it does in protected or real-address mode. The interrupt or exception handler that is invoked and the mechanism used to invoke it depends on the class of interrupt or exception that has been detected or generated and the state of various system flags and fields.

In virtual-8086 mode, the interrupts and exceptions are divided into three classes for the purposes of handling:

- **Class 1** — All processor-generated exceptions and all hardware interrupts, including the NMI interrupt and the hardware interrupts sent to the processor's external interrupt delivery pins. All class 1 exceptions and interrupts are handled by the protected-mode exception and interrupt handlers.
- **Class 2** — Special case for maskable hardware interrupts (Section 6.3.2, "Maskable Hardware Interrupts") when the virtual mode extensions are enabled.
- **Class 3** — All software-generated interrupts, that is interrupts generated with the INT *n* instruction[1].

The method the processor uses to handle class 2 and 3 interrupts depends on the setting of the following flags and fields:

- **IOPL field (bits 12 and 13 in the EFLAGS register)** — Controls how class 3 software interrupts are handled when the processor is in virtual-8086 mode (see Section 2.3, "System Flags and Fields in the EFLAGS

1. The INT 3 instruction is a special case (see the description of the INT *n* instruction in Chapter 3, "Instruction Set Reference, A-L", of the *Intel® 64 and IA-32 Architectures Software Developer's Manual, Volume 2A*).

Register”). This field also controls the enabling of the VIF and VIP flags in the EFLAGS register when the VME flag is set. The VIF and VIP flags are provided to assist in the handling of class 2 maskable hardware interrupts.

- **VME flag (bit 0 in control register CR4)** — Enables the virtual mode extension for the processor when set (see Section 2.5, “Control Registers”).
- **Software interrupt redirection bit map (32 bytes in the TSS, see Figure 21-5)** — Contains 256 flags that indicates how class 3 software interrupts should be handled when they occur in virtual-8086 mode. A software interrupt can be directed either to the interrupt and exception handlers in the currently running 8086 program or to the protected-mode interrupt and exception handlers.
- **The virtual interrupt flag (VIF) and virtual interrupt pending flag (VIP) in the EFLAGS register** — Provides **virtual interrupt support** for the handling of class 2 maskable hardware interrupts (see Section 21.3.2, “Class 2—Maskable Hardware Interrupt Handling in Virtual-8086 Mode Using the Virtual Interrupt Mechanism”).

NOTE

The VME flag, software interrupt redirection bit map, and VIF and VIP flags are only available in IA-32 processors that support the virtual mode extensions. These extensions were introduced in the IA-32 architecture with the Pentium processor.

The following sections describe the actions that processor takes and the possible actions of interrupt and exception handlers for the two classes of interrupts described in the previous paragraphs. These sections describe three possible types of interrupt and exception handlers:

- **Protected-mode interrupt and exceptions handlers** — These are the standard handlers that the processor calls through the protected-mode IDT.
- **Virtual-8086 monitor interrupt and exception handlers** — These handlers are resident in the virtual-8086 monitor, and they are commonly accessed through a general-protection exception (#GP, interrupt 13) that is directed to the protected-mode general-protection exception handler.
- **8086 program interrupt and exception handlers** — These handlers are part of the 8086 program that is running in virtual-8086 mode.

The following sections describe how these handlers are used, depending on the selected class and method of interrupt and exception handling.

21.3.1 Class 1—Hardware Interrupt and Exception Handling in Virtual-8086 Mode

In virtual-8086 mode, the Pentium, P6 family, Pentium 4, and Intel Xeon processors handle hardware interrupts and exceptions in the same manner as they are handled by the Intel486 and Intel386 processors. They invoke the protected-mode interrupt or exception handler that the interrupt or exception vector points to in the IDT. Here, the IDT entry must contain either a 32-bit trap or interrupt gate or a task gate. The following sections describe various ways that a virtual-8086 mode interrupt or exception can be handled after the protected-mode handler has been invoked.

See Section 21.3.2, “Class 2—Maskable Hardware Interrupt Handling in Virtual-8086 Mode Using the Virtual Interrupt Mechanism”, for a description of the virtual interrupt mechanism that is available for handling maskable hardware interrupts while in virtual-8086 mode. When this mechanism is either not available or not enabled, maskable hardware interrupts are handled in the same manner as exceptions, as described in the following sections.

21.3.1.1 Handling an Interrupt or Exception Through a Protected-Mode Trap or Interrupt Gate

When an interrupt or exception vector points to a 32-bit trap or interrupt gate in the IDT, the gate must in turn point to a nonconforming, privilege-level 0, code segment. When accessing this code segment, processor performs the following steps.

1. Switches to 32-bit protected mode and privilege level 0.
2. Saves the state of the processor on the privilege-level 0 stack. The states of the EIP, CS, EFLAGS, ESP, SS, ES, DS, FS, and GS registers are saved (see Figure 21-4).

3. Clears the segment registers. Saving the DS, ES, FS, and GS registers on the stack and then clearing the registers lets the interrupt or exception handler safely save and restore these registers regardless of the type segment selectors they contain (protected-mode or 8086-style). The interrupt and exception handlers, which may be called in the context of either a protected-mode task or a virtual-8086-mode task, can use the same code sequences for saving and restoring the registers for any task. Clearing these registers before execution of the IRET instruction does not cause a trap in the interrupt handler. Interrupt procedures that expect values in the segment registers or that return values in the segment registers must use the register images saved on the stack for privilege level 0.
4. Clears VM, NT, RF, and TF flags (in the EFLAGS register). If the gate is an interrupt gate, clears the IF flag.
5. Begins executing the selected interrupt or exception handler.

If the trap or interrupt gate references a procedure in a conforming segment or in a segment at a privilege level other than 0, the processor generates a general-protection exception (#GP). Here, the error code is the segment selector of the code segment to which a call was attempted.

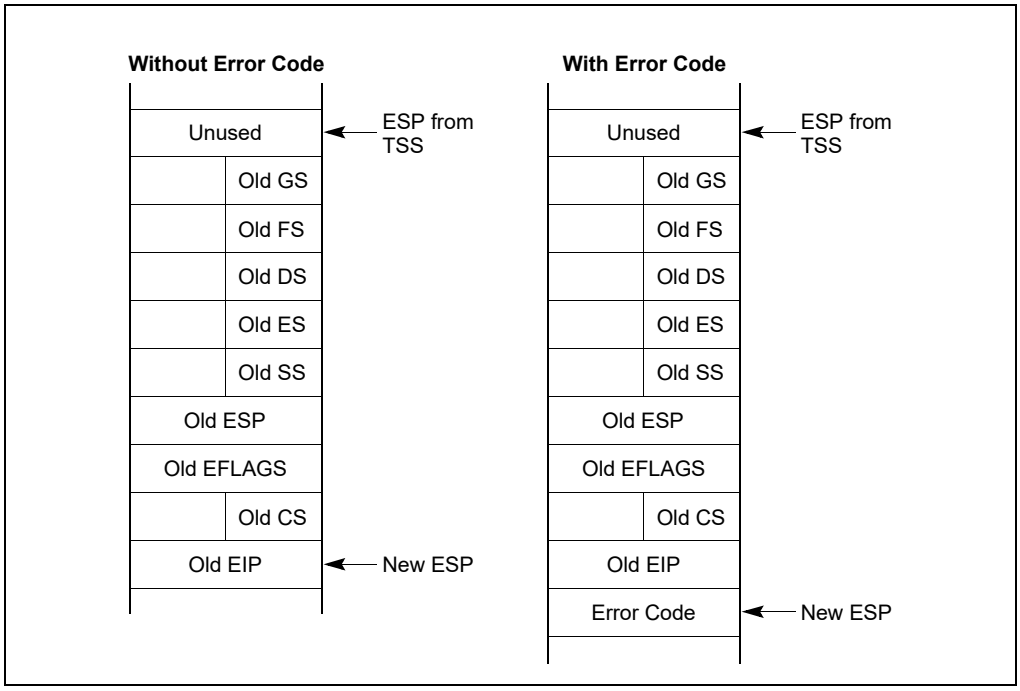

Figure 21-4. Privilege Level 0 Stack After Interrupt or Exception in Virtual-8086 Mode

Interrupt and exception handlers can examine the VM flag on the stack to determine if the interrupted procedure was running in virtual-8086 mode. If so, the interrupt or exception can be handled in one of three ways:

- The protected-mode interrupt or exception handler that was called can handle the interrupt or exception.
- The protected-mode interrupt or exception handler can call the virtual-8086 monitor to handle the interrupt or exception.
- The virtual-8086 monitor (if called) can in turn pass control back to the 8086 program's interrupt and exception handler.

If the interrupt or exception is handled with a protected-mode handler, the handler can return to the interrupted program in virtual-8086 mode by executing an IRET instruction. This instruction loads the EFLAGS and segment registers from the images saved in the privilege level 0 stack (see Figure 21-4). A set VM flag in the EFLAGS image causes the processor to switch back to virtual-8086 mode. The CPL at the time the IRET instruction is executed must be 0, otherwise the processor does not change the state of the VM flag.

The virtual-8086 monitor runs at privilege level 0, like the protected-mode interrupt and exception handlers. It is commonly closely tied to the protected-mode general-protection exception (#GP, vector 13) handler. If the protected-mode interrupt or exception handler calls the virtual-8086 monitor to handle the interrupt or exception, the return from the virtual-8086 monitor to the interrupted virtual-8086 mode program requires two return instructions: a RET instruction to return to the protected-mode handler and an IRET instruction to return to the interrupted program.

The virtual-8086 monitor has the option of directing the interrupt and exception back to an interrupt or exception handler that is part of the interrupted 8086 program, as described in Section 21.3.1.2, "Handling an Interrupt or Exception With an 8086 Program Interrupt or Exception Handler".

21.3.1.2 Handling an Interrupt or Exception With an 8086 Program Interrupt or Exception Handler

Because it was designed to run on an 8086 processor, an 8086 program running in a virtual-8086-mode task contains an 8086-style interrupt vector table, which starts at linear address 0. If the virtual-8086 monitor correctly directs an interrupt or exception vector back to the virtual-8086-mode task it came from, the handlers in the 8086 program can handle the interrupt or exception. The virtual-8086 monitor must carry out the following steps to send an interrupt or exception back to the 8086 program:

1. Use the 8086 interrupt vector to locate the appropriate handler procedure in the 8086 program interrupt table.
2. Store the EFLAGS (low-order 16 bits only), CS and EIP values of the 8086 program on the privilege-level 3 stack. This is the stack that the virtual-8086-mode task is using. (The 8086 handler may use or modify this information.)
3. Change the return link on the privilege-level 0 stack to point to the privilege-level 3 handler procedure.
4. Execute an IRET instruction to pass control to the 8086 program handler.
5. When the IRET instruction from the privilege-level 3 handler triggers a general-protection exception (#GP) and thus effectively again calls the virtual-8086 monitor, restore the return link on the privilege-level 0 stack to point to the original, interrupted, privilege-level 3 procedure.
6. Copy the low order 16 bits of the EFLAGS image from the privilege-level 3 stack to the privilege-level 0 stack (because some 8086 handlers modify these flags to return information to the code that caused the interrupt).
7. Execute an IRET instruction to pass control back to the interrupted 8086 program.

Note that if an operating system intends to support all 8086 MS-DOS-based programs, it is necessary to use the actual 8086 interrupt and exception handlers supplied with the program. The reason for this is that some programs modify their own interrupt vector table to substitute (or hook in series) their own specialized interrupt and exception handlers.

21.3.1.3 Handling an Interrupt or Exception Through a Task Gate

When an interrupt or exception vector points to a task gate in the IDT, the processor performs a task switch to the selected interrupt- or exception-handling task. The following actions are carried out as part of this task switch:

1. The EFLAGS register with the VM flag set is saved in the current TSS.
2. The link field in the TSS of the called task is loaded with the segment selector of the TSS for the interrupted virtual-8086-mode task.
3. The EFLAGS register is loaded from the image in the new TSS, which clears the VM flag and causes the processor to switch to protected mode.
4. The NT flag in the EFLAGS register is set.
5. The processor begins executing the selected interrupt- or exception-handler task.

When an IRET instruction is executed in the handler task and the NT flag in the EFLAGS register is set, the processors switches from a protected-mode interrupt- or exception-handler task back to a virtual-8086-mode task. Here, the EFLAGS and segment registers are loaded from images saved in the TSS for the virtual-8086-mode task. If the VM flag is set in the EFLAGS image, the processor switches back to virtual-8086 mode on the task switch. The CPL at the time the IRET instruction is executed must be 0, otherwise the processor does not change the state of the VM flag.

21.3.2 Class 2—Maskable Hardware Interrupt Handling in Virtual-8086 Mode Using the Virtual Interrupt Mechanism

Maskable hardware interrupts are those interrupts that are delivered through the INTR# pin or through an interrupt request to the local APIC (see Section 6.3.2, "Maskable Hardware Interrupts"). These interrupts can be inhibited (masked) from interrupting an executing program or task by clearing the IF flag in the EFLAGS register.

When the VME flag in control register CR4 is set and the IOPL field in the EFLAGS register is less than 3, two additional flags are activated in the EFLAGS register:

- VIF (virtual interrupt) flag, bit 19 of the EFLAGS register.
- VIP (virtual interrupt pending) flag, bit 20 of the EFLAGS register.

These flags provide the virtual-8086 monitor with more efficient control over handling maskable hardware interrupts that occur during virtual-8086 mode tasks. They also reduce interrupt-handling overhead, by eliminating the need for all IF related operations (such as PUSHF, POPF, CLI, and STI instructions) to trap to the virtual-8086 monitor. The purpose and use of these flags are as follows.

NOTE

The VIF and VIP flags are only available in IA-32 processors that support the virtual mode extensions. These extensions were introduced in the IA-32 architecture with the Pentium processor. When this mechanism is either not available or not enabled, maskable hardware interrupts are handled as class 1 interrupts. Here, if VIF and VIP flags are needed, the virtual-8086 monitor can implement them in software.

Existing 8086 programs commonly set and clear the IF flag in the EFLAGS register to enable and disable maskable hardware interrupts, respectively; for example, to disable interrupts while handling another interrupt or an exception. This practice works well in single task environments, but can cause problems in multitasking and multiple-processor environments, where it is often desirable to prevent an application program from having direct control over the handling of hardware interrupts. When using earlier IA-32 processors, this problem was often solved by creating a virtual IF flag in software. The IA-32 processors (beginning with the Pentium processor) provide hardware support for this virtual IF flag through the VIF and VIP flags.

The VIF flag is a virtualized version of the IF flag, which an application program running from within a virtual-8086 task can used to control the handling of maskable hardware interrupts. When the VIF flag is enabled, the CLI and STI instructions operate on the VIF flag instead of the IF flag. When an 8086 program executes the CLI instruction, the processor clears the VIF flag to request that the virtual-8086 monitor inhibit maskable hardware interrupts from interrupting program execution; when it executes the STI instruction, the processor sets the VIF flag requesting that the virtual-8086 monitor enable maskable hardware interrupts for the 8086 program. But actually the IF flag, managed by the operating system, always controls whether maskable hardware interrupts are enabled. Also, if under these circumstances an 8086 program tries to read or change the IF flag using the PUSHF or POPF instructions, the processor will change the VIF flag instead, leaving IF unchanged.

The VIP flag provides software a means of recording the existence of a deferred (or pending) maskable hardware interrupt. This flag is read by the processor but never explicitly written by the processor; it can only be written by software.

If the IF flag is set and the VIF and VIP flags are enabled, and the processor receives a maskable hardware interrupt (interrupt vector 0 through 255), the processor performs and the interrupt handler software should perform the following operations:

1. The processor invokes the protected-mode interrupt handler for the interrupt received, as described in the following steps. These steps are almost identical to those described for method 1 interrupt and exception handling in Section 21.3.1.1, "Handling an Interrupt or Exception Through a Protected-Mode Trap or Interrupt Gate":
   a. Switches to 32-bit protected mode and privilege level 0.
   b. Saves the state of the processor on the privilege-level 0 stack. The states of the EIP, CS, EFLAGS, ESP, SS, ES, DS, FS, and GS registers are saved (see Figure 21-4).
   c. Clears the segment registers.

d. Clears the VM flag in the EFLAGS register.

e. Begins executing the selected protected-mode interrupt handler.

2. The recommended action of the protected-mode interrupt handler is to read the VM flag from the EFLAGS image on the stack. If this flag is set, the handler makes a call to the virtual-8086 monitor.

3. The virtual-8086 monitor should read the VIF flag in the EFLAGS register.

   — If the VIF flag is clear, the virtual-8086 monitor sets the VIP flag in the EFLAGS image on the stack to indicate that there is a deferred interrupt pending and returns to the protected-mode handler.

   — If the VIF flag is set, the virtual-8086 monitor can handle the interrupt if it "belongs" to the 8086 program running in the interrupted virtual-8086 task; otherwise, it can call the protected-mode interrupt handler to handle the interrupt.

4. The protected-mode handler executes a return to the program executing in virtual-8086 mode.

5. Upon returning to virtual-8086 mode, the processor continues execution of the 8086 program.

When the 8086 program is ready to receive maskable hardware interrupts, it executes the STI instruction to set the VIF flag (enabling maskable hardware interrupts). Prior to setting the VIF flag, the processor automatically checks the VIP flag and does one of the following, depending on the state of the flag:

- If the VIP flag is clear (indicating no pending interrupts), the processor sets the VIF flag.
- If the VIP flag is set (indicating a pending interrupt), the processor generates a general-protection exception (#GP).

The recommended action of the protected-mode general-protection exception handler is to then call the virtual-8086 monitor and let it handle the pending interrupt. After handling the pending interrupt, the typical action of the virtual-8086 monitor is to clear the VIP flag and set the VIF flag in the EFLAGS image on the stack, and then execute a return to the virtual-8086 mode. The next time the processor receives a maskable hardware interrupt, it will then handle it as described in steps 1 through 5 earlier in this section.

If the processor finds that both the VIF and VIP flags are set at the beginning of an instruction, it generates a general-protection exception. This action allows the virtual-8086 monitor to handle the pending interrupt for the virtual-8086 mode task for which the VIF flag is enabled. Note that this situation can only occur immediately following execution of a POPF or IRET instruction or upon entering a virtual-8086 mode task through a task switch.

Note that the states of the VIF and VIP flags are not modified in real-address mode or during transitions between real-address and protected modes.

NOTE

The virtual interrupt mechanism described in this section is also available for use in protected mode, see Section 21.4, "Protected-Mode Virtual Interrupts".

21.3.3 Class 3—Software Interrupt Handling in Virtual-8086 Mode

When the processor receives a software interrupt (an interrupt generated with the INT *n* instruction) while in virtual-8086 mode, it can use any of six different methods to handle the interrupt. The method selected depends on the settings of the VME flag in control register CR4, the IOPL field in the EFLAGS register, and the software interrupt redirection bit map in the TSS. Table 21-2 lists the six methods of handling software interrupts in virtual-8086 mode and the respective settings of the VME flag, IOPL field, and the bits in the interrupt redirection bit map for each method. The table also summarizes the various actions the processor takes for each method.

The VME flag enables the virtual mode extensions for the Pentium and later IA-32 processors. When this flag is clear, the processor responds to interrupts and exceptions in virtual-8086 mode in the same manner as an Intel386 or Intel486 processor does. When this flag is set, the virtual mode extension provides the following enhancements to virtual-8086 mode:

- Speeds up the handling of software-generated interrupts in virtual-8086 mode by allowing the processor to bypass the virtual-8086 monitor and redirect software interrupts back to the interrupt handlers that are part of the currently running 8086 program.
- Supports virtual interrupts for software written to run on the 8086 processor.

The IOPL value interacts with the VME flag and the bits in the interrupt redirection bit map to determine how specific software interrupts should be handled.

The software interrupt redirection bit map (see Figure 21-5) is a 32-byte field in the TSS. This map is located directly below the I/O permission bit map in the TSS. Each bit in the interrupt redirection bit map is mapped to an interrupt vector. Bit 0 in the interrupt redirection bit map (which maps to vector zero in the interrupt table) is located at the I/O base map address in the TSS minus 32 bytes. When a bit in this bit map is set, it indicates that the associated software interrupt (interrupt generated with an INT *n* instruction) should be handled through the protected-mode IDT and interrupt and exception handlers. When a bit in this bit map is clear, the processor redirects the associated software interrupt back to the interrupt table in the 8086 program (located at linear address 0 in the program's address space).

NOTE

The software interrupt redirection bit map does not affect hardware generated interrupts and exceptions. Hardware generated interrupts and exceptions are always handled by the protected-mode interrupt and exception handlers.

Table 21-2. Software Interrupt Handling Methods While in Virtual-8086 Mode

Method	VME	IOPL	Bit in Redir. Bitmap*	Processor Action
1	0	3	X	Interrupt directed to a protected-mode interrupt handler: ▪ Switches to privilege-level 0 stack. ▪ Pushes GS, FS, DS, and ES onto privilege-level 0 stack. ▪ Pushes SS, ESP, EFLAGS, CS, and EIP of interrupted task onto privilege-level 0 stack. ▪ Clears VM, RF, NT, and TF flags. ▪ If serviced through interrupt gate, clears IF flag. ▪ Clears GS, FS, DS, and ES to 0. ▪ Sets CS and EIP from interrupt gate.
2	0	< 3	X	Interrupt directed to protected-mode general-protection exception (#GP) handler.
3	1	< 3	1	Interrupt directed to a protected-mode general-protection exception (#GP) handler; VIF and VIP flag support for handling class 2 maskable hardware interrupts.
4	1	3	1	Interrupt directed to protected-mode interrupt handler: (see method 1 processor action).
5	1	3	0	Interrupt redirected to 8086 program interrupt handler: ▪ Pushes EFLAGS. ▪ Pushes CS and EIP (lower 16 bits only). ▪ Clears IF flag. ▪ Clears TF flag. ▪ Loads CS and EIP (lower 16 bits only) from selected entry in the interrupt vector table of the current virtual-8086 task.
6	1	< 3	0	Interrupt redirected to 8086 program interrupt handler; VIF and VIP flag support for handling class 2 maskable hardware interrupts: ▪ Pushes EFLAGS with IOPL set to 3 and VIF copied to IF. ▪ Pushes CS and EIP (lower 16 bits only). ▪ Clears the VIF flag. ▪ Clears TF flag. ▪ Loads CS and EIP (lower 16 bits only) from selected entry in the interrupt vector table of the current virtual-8086 task.

NOTE:

* When set to 0, software interrupt is redirected back to the 8086 program interrupt handler; when set to 1, interrupt is directed to protected-mode handler.

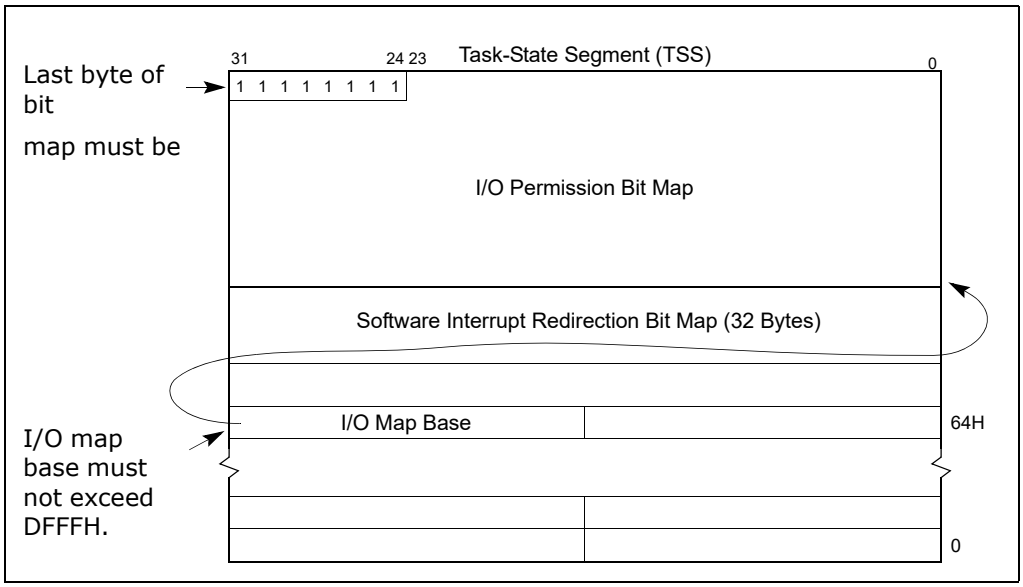

Figure 21-5. Software Interrupt Redirection Bit Map in TSS

Redirecting software interrupts back to the 8086 program potentially speeds up interrupt handling because a switch back and forth between virtual-8086 mode and protected mode is not required. This latter interrupt-handling technique is particularly useful for 8086 operating systems (such as MS-DOS) that use the INT *n* instruction to call operating system procedures.

The CPUID instruction can be used to verify that the virtual mode extension is implemented on the processor. Bit 1 of the feature flags register (EDX) indicates the availability of the virtual mode extension (see "CPUID—CPU Identification" in Chapter 3, "Instruction Set Reference, A-L", of the *Intel® 64 and IA-32 Architectures Software Developer's Manual, Volume 2A*).

The following sections describe the six methods (or mechanisms) for handling software interrupts in virtual-8086 mode. See Section 21.3.2, "Class 2—Maskable Hardware Interrupt Handling in Virtual-8086 Mode Using the Virtual Interrupt Mechanism", for a description of the use of the VIF and VIP flags in the EFLAGS register for handling maskable hardware interrupts.

21.3.3.1 Method 1: Software Interrupt Handling

When the VME flag in control register CR4 is clear and the IOPL field is 3, a Pentium or later IA-32 processor handles software interrupts in the same manner as they are handled by an Intel386 or Intel486 processor. It executes an implicit call to the interrupt handler in the protected-mode IDT pointed to by the interrupt vector. See Section 21.3.1, "Class 1—Hardware Interrupt and Exception Handling in Virtual-8086 Mode", for a complete description of this mechanism and its possible uses.

21.3.3.2 Methods 2 and 3: Software Interrupt Handling

When a software interrupt occurs in virtual-8086 mode and the method 2 or 3 conditions are present, the processor generates a general-protection exception (#GP). Method 2 is enabled when the VME flag is set to 0 and the IOPL value is less than 3. Here the IOPL value is used to bypass the protected-mode interrupt handlers and cause any software interrupt that occurs in virtual-8086 mode to be treated as a protected-mode general-protection exception (#GP). The general-protection exception handler calls the virtual-8086 monitor, which can then emulate an 8086-program interrupt handler or pass control back to the 8086 program's handler, as described in Section 21.3.1.2, "Handling an Interrupt or Exception With an 8086 Program Interrupt or Exception Handler".

Method 3 is enabled when the VME flag is set to 1, the IOPL value is less than 3, and the corresponding bit for the software interrupt in the software interrupt redirection bit map is set to 1. Here, the processor performs the same

operation as it does for method 2 software interrupt handling. If the corresponding bit for the software interrupt in the software interrupt redirection bit map is set to 0, the interrupt is handled using method 6 (see Section 21.3.3.5, "Method 6: Software Interrupt Handling").

21.3.3.3 Method 4: Software Interrupt Handling

Method 4 handling is enabled when the VME flag is set to 1, the IOPL value is 3, and the bit for the interrupt vector in the redirection bit map is set to 1. Method 4 software interrupt handling allows method 1 style handling when the virtual mode extension is enabled; that is, the interrupt is directed to a protected-mode handler (see Section 21.3.3.1, "Method 1: Software Interrupt Handling").

21.3.3.4 Method 5: Software Interrupt Handling

Method 5 software interrupt handling provides a streamlined method of redirecting software interrupts (invoked with the INT *n* instruction) that occur in virtual 8086 mode back to the 8086 program's interrupt vector table and its interrupt handlers. Method 5 handling is enabled when the VME flag is set to 1, the IOPL value is 3, and the bit for the interrupt vector in the redirection bit map is set to 0. The processor performs the following actions to make an implicit call to the selected 8086 program interrupt handler:

1. Pushes the low-order 16 bits of the EFLAGS register onto the stack.
2. Pushes the current values of the CS and EIP registers onto the current stack. (Only the 16 least-significant bits of the EIP register are pushed and no stack switch occurs.)
3. Clears the IF flag in the EFLAGS register to disable interrupts.
4. Clears the TF flag, in the EFLAGS register.
5. Locates the 8086 program interrupt vector table at linear address 0 for the 8086-mode task.
6. Loads the CS and EIP registers with values from the interrupt vector table entry pointed to by the interrupt vector number. Only the 16 low-order bits of the EIP are loaded and the 16 high-order bits are set to 0. The interrupt vector table is assumed to be at linear address 0 of the current virtual-8086 task.
7. Begins executing the selected interrupt handler.

An IRET instruction at the end of the handler procedure reverses these steps to return program control to the interrupted 8086 program.

Note that with method 5 handling, a mode switch from virtual-8086 mode to protected mode does not occur. The processor remains in virtual-8086 mode throughout the interrupt-handling operation.

The method 5 handling actions are virtually identical to the actions the processor takes when handling software interrupts in real-address mode. The benefit of using method 5 handling to access the 8086 program handlers is that it avoids the overhead of methods 2 and 3 handling, which requires first going to the virtual-8086 monitor, then to the 8086 program handler, then back again to the virtual-8086 monitor, before returning to the interrupted 8086 program (see Section 21.3.1.2, "Handling an Interrupt or Exception With an 8086 Program Interrupt or Exception Handler").

NOTE

Methods 1 and 4 handling can handle a software interrupt in a virtual-8086 task with a regular protected-mode handler, but this approach requires all virtual-8086 tasks to use the same software interrupt handlers, which generally does not give sufficient latitude to the programs running in the virtual-8086 tasks, particularly MS-DOS programs.

21.3.3.5 Method 6: Software Interrupt Handling

Method 6 handling is enabled when the VME flag is set to 1, the IOPL value is less than 3, and the bit for the interrupt or exception vector in the redirection bit map is set to 0. With method 6 interrupt handling, software interrupts are handled in the same manner as was described for method 5 handling (see Section 21.3.3.4, "Method 5: Software Interrupt Handling").

Method 6 differs from method 5 in that with the IOPL value set to less than 3, the VIF and VIP flags in the EFLAGS register are enabled, providing virtual interrupt support for handling class 2 maskable hardware interrupts (see Section 21.3.2, "Class 2—Maskable Hardware Interrupt Handling in Virtual-8086 Mode Using the Virtual Interrupt Mechanism"). These flags provide the virtual-8086 monitor with an efficient means of handling maskable hardware interrupts that occur during a virtual-8086 mode task. Also, because the IOPL value is less than 3 and the VIF flag is enabled, the information pushed on the stack by the processor when invoking the interrupt handler is slightly different between methods 5 and 6 (see Table 21-2).

21.4 PROTECTED-MODE VIRTUAL INTERRUPTS

The IA-32 processors (beginning with the Pentium processor) also support the VIF and VIP flags in the EFLAGS register in protected mode by setting the PVI (protected-mode virtual interrupt) flag in the CR4 register. Setting the PVI flag allows applications running at privilege level 3 to execute the CLI and STI instructions without causing a general-protection exception (#GP) or affecting hardware interrupts.

When the PVI flag is set to 1, the CPL is 3, and the IOPL is less than 3, the STI and CLI instructions set and clear the VIF flag in the EFLAGS register, leaving IF unaffected. In this mode of operation, an application running in protected mode and at a CPL of 3 can inhibit interrupts in the same manner as is described in Section 21.3.2, "Class 2—Maskable Hardware Interrupt Handling in Virtual-8086 Mode Using the Virtual Interrupt Mechanism", for a virtual-8086 mode task. When the application executes the CLI instruction, the processor clears the VIF flag. If the processor receives a maskable hardware interrupt, the processor invokes the protected-mode interrupt handler. This handler checks the state of the VIF flag in the EFLAGS register. If the VIF flag is clear (indicating that the active task does not want to have interrupts handled now), the handler sets the VIP flag in the EFLAGS image on the stack and returns to the privilege-level 3 application, which continues program execution. When the application executes a STI instruction to set the VIF flag, the processor automatically invokes the general-protection exception handler, which can then handle the pending interrupt. After handing the pending interrupt, the handler typically sets the VIF flag and clears the VIP flag in the EFLAGS image on the stack and executes a return to the application program. The next time the processor receives a maskable hardware interrupt, the processor will handle it in the normal manner for interrupts received while the processor is operating at a CPL of 3.

If the protected-mode virtual interrupt extension is enabled, CPL = 3, and the processor finds that both the VIF and VIP flags are set at the beginning of an instruction, a general-protection exception is generated.

Because the protected-mode virtual interrupt extension changes only the treatment of EFLAGS.IF (by having CLI and STI update EFLAGS.VIF instead), it affects only the masking of maskable hardware interrupts (interrupt vectors 32 through 255). NMI interrupts and exceptions are handled in the normal manner.

(When protected-mode virtual interrupts are disabled (that is, when the PVI flag in control register CR4 is set to 0, the CPL is less than 3, or the IOPL value is 3), then the CLI and STI instructions execute in a manner compatible with the Intel486 processor. That is, if the CPL is greater (less privileged) than the I/O privilege level (IOPL), a general-protection exception occurs. If the IOPL value is 3, CLI and STI clear or set the IF flag, respectively.)

PUSHF, POPF, IRET, and INT are executed like in the Intel486 processor, regardless of whether protected-mode virtual interrupts are enabled.

It is only possible to enter virtual-8086 mode through a task switch or the execution of an IRET instruction, and it is only possible to leave virtual-8086 mode by faulting to a protected-mode interrupt handler (typically the general-protection exception handler, which in turn calls the virtual 8086-mode monitor). In both cases, the EFLAGS register is saved and restored. This is not true, however, in protected mode when the PVI flag is set and the processor is not in virtual-8086 mode. Here, it is possible to call a procedure at a different privilege level, in which case the EFLAGS register is not saved or modified. However, the states of VIF and VIP flags are never examined by the processor when the CPL is not 3.

CHAPTER 22
MIXING 16-BIT AND 32-BIT CODE

Program modules written to run on IA-32 processors can be either 16-bit modules or 32-bit modules. Table 22-1 shows the characteristic of 16-bit and 32-bit modules.

Table 22-1. Characteristics of 16-Bit and 32-Bit Program Modules

Characteristic	16-Bit Program Modules	32-Bit Program Modules
Segment Size	0 to 64 KBytes	0 to 4 GBytes
Operand Sizes	8 bits and 16 bits	8 bits and 32 bits
Pointer Offset Size (Address Size)	16 bits	32 bits
Stack Pointer Size	16 Bits	32 Bits
Control Transfers Allowed to Code Segments of This Size	16 Bits	32 Bits

The IA-32 processors function most efficiently when executing 32-bit program modules. They can, however, also execute 16-bit program modules, in any of the following ways:

- In real-address mode.
- In virtual-8086 mode.
- System management mode (SMM).
- As a protected-mode task, when the code, data, and stack segments for the task are all configured as a 16-bit segments.
- By integrating 16-bit and 32-bit segments into a single protected-mode task.
- By integrating 16-bit operations into 32-bit code segments.

Real-address mode, virtual-8086 mode, and SMM are native 16-bit modes. A legacy program assembled and/or compiled to run on an Intel 8086 or Intel 286 processor should run in real-address mode or virtual-8086 mode without modification. Sixteen-bit program modules can also be written to run in real-address mode for handling system initialization or to run in SMM for handling system management functions. See Chapter 21, "8086 Emulation," for detailed information on real-address mode and virtual-8086 mode; see Chapter 32, "System Management Mode," for information on SMM.

This chapter describes how to integrate 16-bit program modules with 32-bit program modules when operating in protected mode and how to mix 16-bit and 32-bit code within 32-bit code segments.

22.1 DEFINING 16-BIT AND 32-BIT PROGRAM MODULES

The following IA-32 architecture mechanisms are used to distinguish between and support 16-bit and 32-bit segments and operations:

- The D (default operand and address size) flag in code-segment descriptors.
- The B (default stack size) flag in stack-segment descriptors.
- 16-bit and 32-bit call gates, interrupt gates, and trap gates.
- Operand-size and address-size instruction prefixes.
- 16-bit and 32-bit general-purpose registers.

The D flag in a code-segment descriptor determines the default operand-size and address-size for the instructions of a code segment. (In real-address mode and virtual-8086 mode, which do not use segment descriptors, the default is 16 bits.) A code segment with its D flag set is a 32-bit segment; a code segment with its D flag clear is a 16-bit segment.

The B flag in the stack-segment descriptor specifies the size of stack pointer (the 32-bit ESP register or the 16-bit SP register) used by the processor for implicit stack references. The B flag for all data descriptors also controls upper address range for expand down segments.

When transferring program control to another code segment through a call gate, interrupt gate, or trap gate, the operand size used during the transfer is determined by the type of gate used (16-bit or 32-bit), (not by the D-flag or prefix of the transfer instruction). The gate type determines how return information is saved on the stack (or stacks).

For most efficient and trouble-free operation of the processor, 32-bit programs or tasks should have the D flag in the code-segment descriptor and the B flag in the stack-segment descriptor set, and 16-bit programs or tasks should have these flags clear. Program control transfers from 16-bit segments to 32-bit segments (and vice versa) are handled most efficiently through call, interrupt, or trap gates.

Instruction prefixes can be used to override the default operand size and address size of a code segment. These prefixes can be used in real-address mode as well as in protected mode and virtual-8086 mode. An operand-size or address-size prefix only changes the size for the duration of the instruction.

22.2 MIXING 16-BIT AND 32-BIT OPERATIONS WITHIN A CODE SEGMENT

The following two instruction prefixes allow mixing of 32-bit and 16-bit operations within one segment:

- The operand-size prefix (66H)
- The address-size prefix (67H)

These prefixes reverse the default size selected by the D flag in the code-segment descriptor. For example, the processor can interpret the (MOV *mem*, *reg*) instruction in any of four ways:

- In a 32-bit code segment:
  - — Moves 32 bits from a 32-bit register to memory using a 32-bit effective address.
  - — If preceded by an operand-size prefix, moves 16 bits from a 16-bit register to memory using a 32-bit effective address.
  - — If preceded by an address-size prefix, moves 32 bits from a 32-bit register to memory using a 16-bit effective address.
  - — If preceded by both an address-size prefix and an operand-size prefix, moves 16 bits from a 16-bit register to memory using a 16-bit effective address.
- In a 16-bit code segment:
  - — Moves 16 bits from a 16-bit register to memory using a 16-bit effective address.
  - — If preceded by an operand-size prefix, moves 32 bits from a 32-bit register to memory using a 16-bit effective address.
  - — If preceded by an address-size prefix, moves 16 bits from a 16-bit register to memory using a 32-bit effective address.
  - — If preceded by both an address-size prefix and an operand-size prefix, moves 32 bits from a 32-bit register to memory using a 32-bit effective address.

The previous examples show that any instruction can generate any combination of operand size and address size regardless of whether the instruction is in a 16- or 32-bit segment. The choice of the 16- or 32-bit default for a code segment is normally based on the following criteria:

- **Performance** — Always use 32-bit code segments when possible. They run much faster than 16-bit code segments on P6 family processors, and somewhat faster on earlier IA-32 processors.
- **The operating system the code segment will be running on** — If the operating system is a 16-bit operating system, it may not support 32-bit program modules.
- **Mode of operation** — If the code segment is being designed to run in real-address mode, virtual-8086 mode, or SMM, it must be a 16-bit code segment.

- **Backward compatibility to earlier IA-32 processors** — If a code segment must be able to run on an Intel 8086 or Intel 286 processor, it must be a 16-bit code segment.

22.3 SHARING DATA AMONG MIXED-SIZE CODE SEGMENTS

Data segments can be accessed from both 16-bit and 32-bit code segments. When a data segment that is larger than 64 KBytes is to be shared among 16- and 32-bit code segments, the data that is to be accessed from the 16-bit code segments must be located within the first 64 KBytes of the data segment. The reason for this is that 16-bit pointers by definition can only point to the first 64 KBytes of a segment.

A stack that spans less than 64 KBytes can be shared by both 16- and 32-bit code segments. This class of stacks includes:

- Stacks in expand-up segments with the G (granularity) and B (big) flags in the stack-segment descriptor clear.
- Stacks in expand-down segments with the G and B flags clear.
- Stacks in expand-up segments with the G flag set and the B flag clear and where the stack is contained completely within the lower 64 KBytes. (Offsets greater than FFFFH can be used for data, other than the stack, which is not shared.)

See Section 3.4.5, "Segment Descriptors," for a description of the G and B flags and the expand-down stack type.

The B flag cannot, in general, be used to change the size of stack used by a 16-bit code segment. This flag controls the size of the stack pointer only for implicit stack references such as those caused by interrupts, exceptions, and the PUSH, POP, CALL, and RET instructions. It does not control explicit stack references, such as accesses to parameters or local variables. A 16-bit code segment can use a 32-bit stack only if the code is modified so that all explicit references to the stack are preceded by the 32-bit address-size prefix, causing those references to use 32-bit addressing and explicit writes to the stack pointer are preceded by a 32-bit operand-size prefix.

In 32-bit, expand-down segments, all offsets may be greater than 64 KBytes; therefore, 16-bit code cannot use this kind of stack segment unless the code segment is modified to use 32-bit addressing.

22.4 TRANSFERRING CONTROL AMONG MIXED-SIZE CODE SEGMENTS

There are three ways for a procedure in a 16-bit code segment to safely make a call to a 32-bit code segment:

- Make the call through a 32-bit call gate.
- Make a 16-bit call to a 32-bit interface procedure. The interface procedure then makes a 32-bit call to the intended destination.
- Modify the 16-bit procedure, inserting an operand-size prefix before the call, to change it to a 32-bit call.

Likewise, there are three ways for procedure in a 32-bit code segment to safely make a call to a 16-bit code segment:

- Make the call through a 16-bit call gate. Here, the EIP value at the CALL instruction cannot exceed FFFFH.
- Make a 32-bit call to a 16-bit interface procedure. The interface procedure then makes a 16-bit call to the intended destination.
- Modify the 32-bit procedure, inserting an operand-size prefix before the call, changing it to a 16-bit call. Be certain that the return offset does not exceed FFFFH.

These methods of transferring program control overcome the following architectural limitations imposed on calls between 16-bit and 32-bit code segments:

- Pointers from 16-bit code segments (which by default can only be 16 bits) cannot be used to address data or code located beyond FFFFH in a 32-bit segment.
- The operand-size attributes for a CALL and its companion RETURN instruction must be the same to maintain stack coherency. This is also true for implicit calls to interrupt and exception handlers and their companion IRET instructions.
- A 32-bit parameters (particularly a pointer parameter) greater than FFFFH cannot be squeezed into a 16-bit parameter location on a stack.

- The size of the stack pointer (SP or ESP) changes when switching between 16-bit and 32-bit code segments.

These limitations are discussed in greater detail in the following sections.

22.4.1 Code-Segment Pointer Size

For control-transfer instructions that use a pointer to identify the next instruction (that is, those that do not use gates), the operand-size attribute determines the size of the offset portion of the pointer. The implications of this rule are as follows:

- A JMP, CALL, or RET instruction from a 32-bit segment to a 16-bit segment is always possible using a 32-bit operand size, providing the 32-bit pointer does not exceed FFFFH.
- A JMP, CALL, or RET instruction from a 16-bit segment to a 32-bit segment cannot address a destination greater than FFFFH, unless the instruction is given an operand-size prefix.

See Section 22.4.5, "Writing Interface Procedures," for an interface procedure that can transfer program control from 16-bit segments to destinations in 32-bit segments beyond FFFFH.

22.4.2 Stack Management for Control Transfer

Because the stack is managed differently for 16-bit procedure calls than for 32-bit calls, the operand-size attribute of the RET instruction must match that of the CALL instruction (see Figure 22-1). On a 16-bit call, the processor pushes the contents of the 16-bit IP register and (for calls between privilege levels) the 16-bit SP register. The matching RET instruction must also use a 16-bit operand size to pop these 16-bit values from the stack into the 16-bit registers.

A 32-bit CALL instruction pushes the contents of the 32-bit EIP register and (for inter-privilege-level calls) the 32-bit ESP register. Here, the matching RET instruction must use a 32-bit operand size to pop these 32-bit values from the stack into the 32-bit registers. If the two parts of a CALL/RET instruction pair do not have matching operand sizes, the stack will not be managed correctly and the values of the instruction pointer and stack pointer will not be restored to correct values.

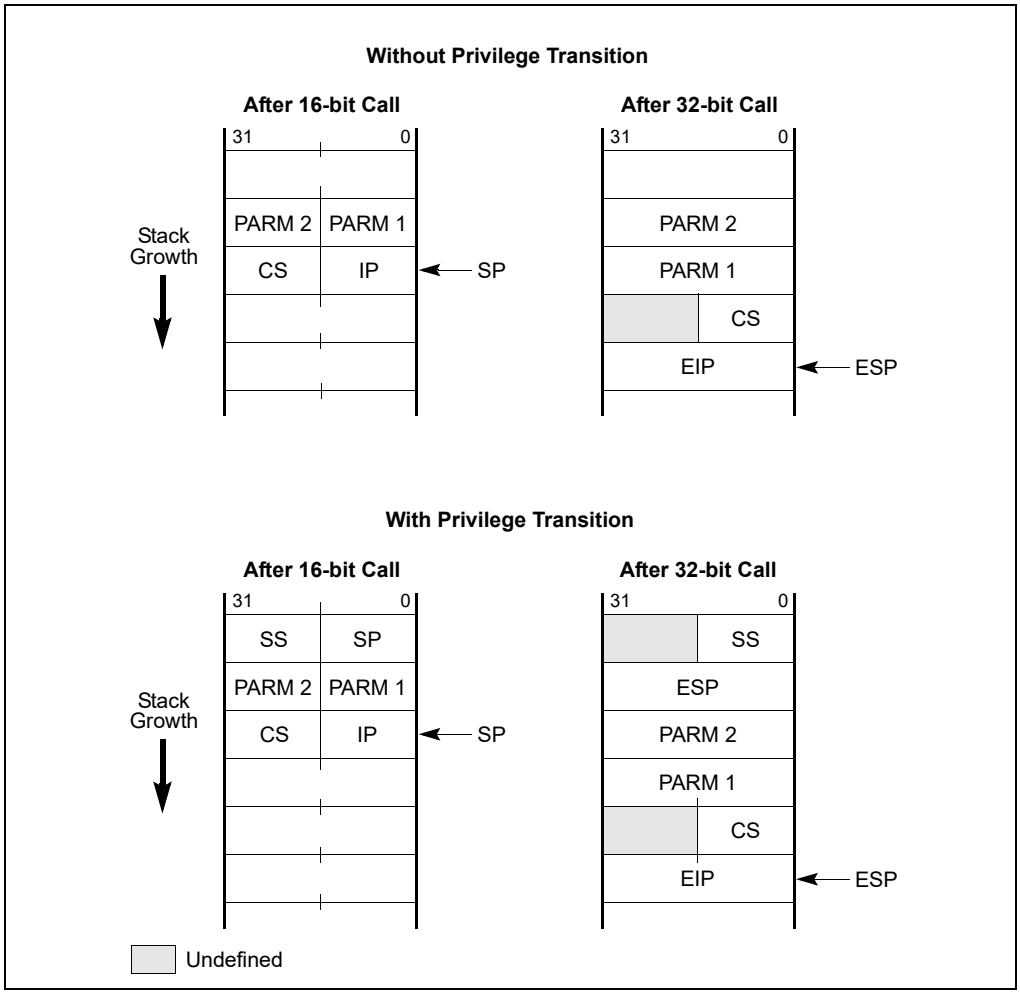

Figure 22-1. Stack after Far 16- and 32-Bit Calls

While executing 32-bit code, if a call is made to a 16-bit code segment which is at the same or a more privileged level (that is, the DPL of the called code segment is less than or equal to the CPL of the calling code segment) through a 16-bit call gate, then the upper 16-bits of the ESP register may be unreliable upon returning to the 32-bit code segment (that is, after executing a RET in the 16-bit code segment).

When the CALL instruction and its matching RET instruction are in code segments that have D flags with the same values (that is, both are 32-bit code segments or both are 16-bit code segments), the default settings may be used. When the CALL instruction and its matching RET instruction are in segments which have different D-flag settings, an operand-size prefix must be used.

22.4.2.1 Controlling the Operand-Size Attribute For a Call

Three things can determine the operand-size of a call:

- The D flag in the segment descriptor for the calling code segment.
- An operand-size instruction prefix.
- The type of call gate (16-bit or 32-bit), if a call is made through a call gate.

When a call is made with a pointer (rather than a call gate), the D flag for the calling code segment determines the operand-size for the CALL instruction. This operand-size attribute can be overridden by prepending an operand-size prefix to the CALL instruction. So, for example, if the D flag for a code segment is set for 16 bits and the operand-size prefix is used with a CALL instruction, the processor will cause the information stored on the stack to

be stored in 32-bit format. If the call is to a 32-bit code segment, the instructions in that code segment will be able to read the stack coherently. Also, a RET instruction from the 32-bit code segment without an operand-size prefix will maintain stack coherency with the 16-bit code segment being returned to.

When a CALL instruction references a call-gate descriptor, the type of call is determined by the type of call gate (16-bit or 32-bit). The offset to the destination in the code segment being called is taken from the gate descriptor; therefore, if a 32-bit call gate is used, a procedure in a 16-bit code segment can call a procedure located more than 64 KBytes from the base of a 32-bit code segment, because a 32-bit call gate uses a 32-bit offset.

Note that regardless of the operand size of the call and how it is determined, the size of the stack pointer used (SP or ESP) is always controlled by the B flag in the stack-segment descriptor currently in use (that is, when B is clear, SP is used, and when B is set, ESP is used).

An unmodified 16-bit code segment that has run successfully on an 8086 processor or in real-mode on a later IA-32 architecture processor will have its D flag clear and will not use operand-size override prefixes. As a result, all CALL instructions in this code segment will use the 16-bit operand-size attribute. Procedures in these code segments can be modified to safely call procedures to 32-bit code segments in either of two ways:

- Relink the CALL instruction to point to 32-bit call gates (see Section 22.4.2.2, "Passing Parameters With a Gate").
- Add a 32-bit operand-size prefix to each CALL instruction.

22.4.2.2 Passing Parameters With a Gate

When referencing 32-bit gates with 16-bit procedures, it is important to consider the number of parameters passed in each procedure call. The count field of the gate descriptor specifies the size of the parameter string to copy from the current stack to the stack of a more privileged (numerically lower privilege level) procedure. The count field of a 16-bit gate specifies the number of 16-bit words to be copied, whereas the count field of a 32-bit gate specifies the number of 32-bit doublewords to be copied. The count field for a 32-bit gate must thus be half the size of the number of words being placed on the stack by a 16-bit procedure. Also, the 16-bit procedure must use an even number of words as parameters.

22.4.3 Interrupt Control Transfers

A program-control transfer caused by an exception or interrupt is always carried out through an interrupt or trap gate (located in the IDT). Here, the type of the gate (16-bit or 32-bit) determines the operand-size attribute used in the implicit call to the exception or interrupt handler procedure in another code segment.

A 32-bit interrupt or trap gate provides a safe interface to a 32-bit exception or interrupt handler when the exception or interrupt occurs in either a 32-bit or a 16-bit code segment. It is sometimes impractical, however, to place exception or interrupt handlers in 16-bit code segments, because only 16-bit return addresses are saved on the stack. If an exception or interrupt occurs in a 32-bit code segment when the EIP was greater than FFFFH, the 16-bit handler procedure cannot provide the correct return address.

22.4.4 Parameter Translation

When segment offsets or pointers (which contain segment offsets) are passed as parameters between 16-bit and 32-bit procedures, some translation is required. If a 32-bit procedure passes a pointer to data located beyond 64 KBytes to a 16-bit procedure, the 16-bit procedure cannot use it. Except for this limitation, interface code can perform any format conversion between 32-bit and 16-bit pointers that may be needed.

Parameters passed by value between 32-bit and 16-bit code also may require translation between 32-bit and 16-bit formats. The form of the translation is application-dependent.

22.4.5 Writing Interface Procedures

Placing interface code between 32-bit and 16-bit procedures can be the solution to the following interface problems:

- Allowing procedures in 16-bit code segments to call procedures with offsets greater than FFFFH in 32-bit code segments.
- Matching operand-size attributes between companion CALL and RET instructions.
- Translating parameters (data), including managing parameter strings with a variable count or an odd number of 16-bit words.
- The possible invalidation of the upper bits of the ESP register.

The interface procedure is simplified where these rules are followed.

1. The interface procedure must reside in a 32-bit code segment (the D flag for the code-segment descriptor is set).
2. All procedures that may be called by 16-bit procedures must have offsets not greater than FFFFH.
3. All return addresses saved by 16-bit procedures must have offsets not greater than FFFFH.

The interface procedure becomes more complex if any of these rules are violated. For example, if a 16-bit procedure calls a 32-bit procedure with an entry point beyond FFFFH, the interface procedure will need to provide the offset to the entry point. The mapping between 16- and 32-bit addresses is only performed automatically when a call gate is used, because the gate descriptor for a call gate contains a 32-bit address. When a call gate is not used, the interface code must provide the 32-bit address.

The structure of the interface procedure depends on the types of calls it is going to support, as follows:

- **Calls from 16-bit procedures to 32-bit procedures** — Calls to the interface procedure from a 16-bit code segment are made with 16-bit CALL instructions (by default, because the D flag for the calling code-segment descriptor is clear), and 16-bit operand-size prefixes are used with RET instructions to return from the interface procedure to the calling procedure. Calls from the interface procedure to 32-bit procedures are performed with 32-bit CALL instructions (by default, because the D flag for the interface procedure's code segment is set), and returns from the called procedures to the interface procedure are performed with 32-bit RET instructions (also by default).
- **Calls from 32-bit procedures to 16-bit procedures** — Calls to the interface procedure from a 32-bit code segment are made with 32-bit CALL instructions (by default), and returns to the calling procedure from the interface procedure are made with 32-bit RET instructions (also by default). Calls from the interface procedure to 16-bit procedures require the CALL instructions to have the operand-size prefixes, and returns from the called procedures to the interface procedure are performed with 16-bit RET instructions (by default).

CHAPTER 23
ARCHITECTURE COMPATIBILITY

Intel 64 and IA-32 processors are binary compatible. Compatibility means that, within limited constraints, programs that execute on previous generations of processors will produce identical results when executed on later processors. The compatibility constraints and any implementation differences between the Intel 64 and IA-32 processors are described in this chapter.

Each new processor has enhanced the software visible architecture from that found in earlier Intel 64 and IA-32 processors. Those enhancements have been defined with consideration for compatibility with previous and future processors. This chapter also summarizes the compatibility considerations for those extensions.

23.1 PROCESSOR FAMILIES AND CATEGORIES

IA-32 processors are referred to in several different ways in this chapter, depending on the type of compatibility information being related, as described in the following:

- **IA-32 Processors** — All the Intel processors based on the Intel IA-32 Architecture, which include the 8086/88, Intel 286, Intel386, Intel486, Pentium, Pentium Pro, Pentium II, Pentium III, Pentium 4, and Intel Xeon processors.
- **32-bit Processors** — All the IA-32 processors that use a 32-bit architecture, which include the Intel386, Intel486, Pentium, Pentium Pro, Pentium II, Pentium III, Pentium 4, and Intel Xeon processors.
- **16-bit Processors** — All the IA-32 processors that use a 16-bit architecture, which include the 8086/88 and Intel 286 processors.
- **P6 Family Processors** — All the IA-32 processors that are based on the P6 microarchitecture, which include the Pentium Pro, Pentium II, and Pentium III processors.
- **Pentium® 4 Processors** — A family of IA-32 and Intel 64 processors that are based on the Intel NetBurst® microarchitecture.
- **Intel® Pentium® M Processors** — A family of IA-32 processors that are based on the Intel Pentium M processor microarchitecture.
- **Intel® Core™ Duo and Solo Processors** — Families of IA-32 processors that are based on an improved Intel Pentium M processor microarchitecture.
- **Intel® Xeon® Processors** — A family of IA-32 and Intel 64 processors that are based on the Intel NetBurst microarchitecture. This family includes the Intel Xeon processor and the Intel Xeon processor MP based on the Intel NetBurst microarchitecture. Intel Xeon processors 3000, 3100, 3200, 3300, 3200, 5100, 5200, 5300, 5400, 7200, 7300 series are based on Intel Core microarchitectures and support Intel 64 architecture.
- **Pentium® D Processors** — A family of dual-core Intel 64 processors that provides two processor cores in a physical package. Each core is based on the Intel NetBurst microarchitecture.
- **Pentium® Processor Extreme Editions** — A family of dual-core Intel 64 processors that provides two processor cores in a physical package. Each core is based on the Intel NetBurst microarchitecture and supports Intel Hyper-Threading Technology.
- **Intel® Core™ 2 Processor family**— A family of Intel 64 processors that are based on the Intel Core microarchitecture. Intel Pentium Dual-Core processors are also based on the Intel Core microarchitecture.
- **Intel Atom® Processors** — A family of IA-32 and Intel 64 processors. 45 nm Intel Atom processors are based on the Intel Atom microarchitecture. 32 nm Intel Atom processors are based on newer microarchitectures including the Silvermont microarchitecture and the Airmont microarchitecture. Each generation of Intel Atom processors can be identified by the CPUID's DisplayFamily_DisplayModel signature; see Table 2-1 "CPUID Signature Values of DisplayFamily_DisplayModel" in Chapter 2, "Model-Specific Registers (MSRs)" of the *Intel® 64 and IA-32 Architectures Software Developer's Manual, Volume 4*.

23.2 RESERVED BITS

Throughout this manual, certain bits are marked as reserved in many register and memory layout descriptions. When bits are marked as undefined or reserved, it is essential for compatibility with future processors that software treat these bits as having a future, though unknown effect. Software should follow these guidelines in dealing with reserved bits:

- Do not depend on the states of any reserved bits when testing the values of registers or memory locations that contain such bits. Mask out the reserved bits before testing.
- Do not depend on the states of any reserved bits when storing them to memory or to a register.
- Do not depend on the ability to retain information written into any reserved bits.
- When loading a register, always load the reserved bits with the values indicated in the documentation, if any, or reload them with values previously read from the same register.

Software written for existing IA-32 processor that handles reserved bits correctly will port to future IA-32 processors without generating protection exceptions.

23.3 ENABLING NEW FUNCTIONS AND MODES

Most of the new control functions defined for the P6 family and Pentium processors are enabled by new mode flags in the control registers (primarily register CR4). This register is undefined for IA-32 processors earlier than the Pentium processor. Attempting to access this register with an Intel486 or earlier IA-32 processor results in an invalid-opcode exception (#UD). Consequently, programs that execute correctly on the Intel486 or earlier IA-32 processor cannot erroneously enable these functions. Attempting to set a reserved bit in register CR4 to a value other than its original value results in a general-protection exception (#GP). So, programs that execute on the P6 family and Pentium processors cannot erroneously enable functions that may be implemented in future IA-32 processors.

The P6 family and Pentium processors do not check for attempts to set reserved bits in model-specific registers; however these bits may be checked on more recent processors. It is the obligation of the software writer to enforce this discipline. These reserved bits may be used in future Intel processors.

23.4 DETECTING THE PRESENCE OF NEW FEATURES THROUGH SOFTWARE

Software can check for the presence of new architectural features and extensions in either of two ways:

1. Test for the presence of the feature or extension. Software can test for the presence of new flags in the EFLAGS register and control registers. If these flags are reserved (meaning not present in the processor executing the test), an exception is generated. Likewise, software can attempt to execute a new instruction, which results in an invalid-opcode exception (#UD) being generated if it is not supported.
2. Execute the CPUID instruction. The CPUID instruction (added to the IA-32 in the Pentium processor) indicates the presence of new features directly.

See Chapter 20, "Processor Identification and Feature Determination," in the *Intel® 64 and IA-32 Architectures Software Developer's Manual, Volume 1*, for detailed information on detecting new processor features and extensions.

23.5 INTEL MMX TECHNOLOGY

The Pentium processor with MMX technology introduced the MMX technology and a set of MMX instructions to the IA-32. The MMX instructions are described in Chapter 9, "Programming with Intel® MMX™ Technology," in the *Intel® 64 and IA-32 Architectures Software Developer's Manual, Volume 1*, and in the *Intel® 64 and IA-32 Architectures Software Developer's Manual, Volumes 2A, 2B, 2C & 2D*. The MMX technology and MMX instructions are also included in the Pentium II, Pentium III, Pentium 4, and Intel Xeon processors.

23.6 STREAMING SIMD EXTENSIONS (SSE)

The Streaming SIMD Extensions (SSE) were introduced in the Pentium III processor. The SSE extensions consist of a new set of instructions and a new set of registers. The new registers include the eight 128-bit XMM registers and the 32-bit MXCSR control and status register. These instructions and registers are designed to allow SIMD computations to be made on single precision floating-point numbers. Several of these new instructions also operate in the MMX registers. SSE instructions and registers are described in Section 10, "Programming with Streaming SIMD Extensions (SSE)," in the *Intel® 64 and IA-32 Architectures Software Developer's Manual, Volume 1*, and in the *Intel® 64 and IA-32 Architectures Software Developer's Manual, Volumes 2A, 2B, 2C & 2D*.

23.7 STREAMING SIMD EXTENSIONS 2 (SSE2)

The Streaming SIMD Extensions 2 (SSE2) were introduced in the Pentium 4 and Intel Xeon processors. They consist of a new set of instructions that operate on the XMM and MXCSR registers and perform SIMD operations on double precision floating-point values and on integer values. Several of these new instructions also operate in the MMX registers. SSE2 instructions and registers are described in Chapter 11, "Programming with Streaming SIMD Extensions 2 (SSE2)," in the *Intel® 64 and IA-32 Architectures Software Developer's Manual, Volume 1*, and in the *Intel® 64 and IA-32 Architectures Software Developer's Manual, Volumes 2A, 2B, 2C & 2D*.

23.8 STREAMING SIMD EXTENSIONS 3 (SSE3)

The Streaming SIMD Extensions 3 (SSE3) were introduced in Pentium 4 processors supporting Intel Hyper-Threading Technology and Intel Xeon processors. SSE3 extensions include 13 instructions. Ten of these 13 instructions support the single instruction multiple data (SIMD) execution model used with SSE/SSE2 extensions. One SSE3 instruction accelerates x87 style programming for conversion to integer. The remaining two instructions (MONITOR and MWAIT) accelerate synchronization of threads. SSE3 instructions are described in Chapter 12, "Programming with Intel® SSE3, SSSE3,Intel® SSE4 AND Intel® AESNI," in the *Intel® 64 and IA-32 Architectures Software Developer's Manual, Volume 1*, and in the *Intel® 64 and IA-32 Architectures Software Developer's Manual, Volumes 2A, 2B, 2C & 2D*.

23.9 ADDITIONAL STREAMING SIMD EXTENSIONS

The Supplemental Streaming SIMD Extensions 3 (SSSE3) were introduced in the Intel Core 2 processor and Intel Xeon processor 5100 series. Streaming SIMD Extensions 4 provided 54 new instructions introduced in 45 nm Intel Xeon processors and Intel Core 2 processors. SSSE3, SSE4.1 and SSE4.2 instructions are described in Chapter 12, "Programming with Intel® SSE3, SSSE3,Intel® SSE4 AND Intel® AESNI," in the *Intel® 64 and IA-32 Architectures Software Developer's Manual, Volume 1*, and in the *Intel® 64 and IA-32 Architectures Software Developer's Manual, Volumes 2A, 2B, 2C & 2D*.

23.10 INTEL HYPER-THREADING TECHNOLOGY

Intel Hyper-Threading Technology provides two logical processors that can execute two separate code streams (called *threads*) concurrently by using shared resources in a single processor core or in a physical package.

This feature was introduced in the Intel Xeon processor MP and later steppings of the Intel Xeon processor, and Pentium 4 processors supporting Intel Hyper-Threading Technology. The feature is also found in the Pentium processor Extreme Edition. See also: Section 9.7, "Intel® Hyper-Threading Technology Architecture."

45 nm and 32 nm Intel Atom processors support Intel Hyper-Threading Technology.

Intel Atom processors based on Silvermont and Airmont microarchitectures do not support Intel Hyper-Threading Technology.

23.11 MULTI-CORE TECHNOLOGY

The Pentium D processor and Pentium processor Extreme Edition provide two processor cores in each physical processor package. See also: Section 9.5, "Intel® Hyper-Threading Technology and Intel® Multi-Core Technology," and Section 9.8, "Multi-Core Architecture." Intel Core 2 Duo, Intel Pentium Dual-Core processors, Intel Xeon processors 3000, 3100, 5100, 5200 series provide two processor cores in each physical processor package. Intel Core 2 Extreme, Intel Core 2 Quad processors, Intel Xeon processors 3200, 3300, 5300, 5400, 7300 series provide two processor cores in each physical processor package.

23.12 SPECIFIC FEATURES OF DUAL-CORE PROCESSOR

Dual-core processors may have some processor-specific features. Use CPUID feature flags to detect the availability features. Note the following:

- **CPUID Brand String** — On Pentium processor Extreme Edition, the process will report the correct brand string only after the correct microcode updates are loaded.
- **Enhanced Intel SpeedStep Technology** — This feature is supported in Pentium D processor but not in Pentium processor Extreme Edition.

23.13 NEW INSTRUCTIONS IN THE PENTIUM AND LATER IA-32 PROCESSORS

Table 23-1 identifies the instructions introduced into the IA-32 in the Pentium processor and later IA-32 processors.

23.13.1 Instructions Added Prior to the Pentium Processor

The following instructions were added in the Intel486 processor:

- BSWAP (byte swap) instruction.
- XADD (exchange and add) instruction.
- CMPXCHG (compare and exchange) instruction.
- INVD (invalidate cache) instruction.
- WBINVD (write-back and invalidate cache) instruction.
- INVLPG (invalidate TLB entry) instruction.

Table 23-1. New Instruction in the Pentium Processor and Later IA-32 Processors

Instruction	CPUID Identification Bits	Introduced In
CMOV*cc* (conditional move)	EDX, Bit 15	Pentium Pro processor
FCMOV*cc* (floating-point conditional move)	EDX, Bits 0 and 15	
FCOMI (floating-point compare and set EFLAGS)	EDX, Bits 0 and 15	
RDPMC (read performance monitoring counters)	EAX, Bits 8-11, set to 6H; see Note 1	
UD2 (undefined)	EAX, Bits 8-11, set to 6H	

Table 23-1. New Instruction in the Pentium Processor and Later IA-32 Processors (Contd.)

Instruction	CPUID Identification Bits	Introduced In
CMPXCHG8B (compare and exchange 8 bytes)	EDX, Bit 8	Pentium processor
CPUID (CPU identification)	None; see Note 2	
RDTSC (read time-stamp counter)	EDX, Bit 4	
RDMSR (read model-specific register)	EDX, Bit 5	
WRMSR (write model-specific register)	EDX, Bit 5	
MMX Instructions	EDX, Bit 23	

NOTES:

1. The RDPMC instruction was introduced in the P6 family of processors and added to later model Pentium processors. This instruction is model specific in nature and not architectural.
2. The CPUID instruction is available in all Pentium and P6 family processors and in later models of the Intel486 processors. The ability to set and clear the ID flag (bit 21) in the EFLAGS register indicates the availability of the CPUID instruction.

The following instructions were added in the Intel386 processor:

- LSS, LFS, and LGS (load SS, FS, and GS registers).
- Long-displacement conditional jumps.
- Single-bit instructions.
- Bit scan instructions.
- Double-shift instructions.
- Byte set on condition instruction.
- Move with sign/zero extension.
- Generalized multiply instruction.
- MOV to and from control registers.
- MOV to and from test registers (now obsolete).
- MOV to and from debug registers.
- RSM (resume from SMM). This instruction was introduced in the Intel386 SL and Intel486 SL processors.

The following instructions were added in the Intel 387 math coprocessor:

- FPREM1.
- FUCOM, FUCOMP, and FUCOMPP.

23.14 OBSOLETE INSTRUCTIONS

The MOV to and from test registers instructions were removed from the Pentium processor and future IA-32 processors. Execution of these instructions generates an invalid-opcode exception (#UD).

23.15 UNDEFINED OPCODES

All new instructions defined for Intel 64 and IA-32 processors use binary encodings that were reserved on earlier-generation processors. Generally, attempting to execute a reserved opcode results in an invalid-opcode (#UD) exception being generated. Consequently, programs that execute correctly on earlier-generation processors cannot erroneously execute these instructions and thereby produce unexpected results when executed on later Intel 64 processors.

For compatibility with prior generations, there are a few reserved opcodes which do not result in a #UD but rather result in the same behavior as certain defined instructions. In the interest of standardization, it is recommended

that software not use the opcodes given below but instead use those defined in the *Intel® 64 and IA-32 Architectures Software Developer's Manual, Volumes 2A, 2B, 2C & 2D*.

The following items enumerate those reserved opcodes (referring in some cases to opcode groups as defined in Appendix A, "Opcode Map" of the *Intel® 64 and IA-32 Architectures Software Developer's Manual, Volume 2D*).

- **Immediate Group 1** - When not in 64-bit mode, instructions encoded with opcode 82H result in the behavior of the corresponding instructions encoded with opcode 80H. Depending on the Op/Reg field of the ModR/M Byte, these opcodes are the byte forms of ADD, OR, ADC, SBB, AND, SUB, XOR, CMP. (In 64-bit mode, these opcodes cause a #UD.)
- **Shift Group 2 /6** - Instructions encoded with opcodes C0H, C1H, D0H, D1H, D2H, and D3H with value 110B in the Op/Reg field (/6) of the ModR/M Byte result in the behavior of the corresponding instructions with value 100B in the Op/Reg field (/4). These are various forms of the SAL/SHL instruction.
- **Unary Group 3 /1** - Instructions encoded with opcodes F6H and F7H with value 001B in the Op/Reg field (/01) of the ModR/M Byte result in the behavior of the corresponding instructions with value 000B in the Op/Reg field (/0). These are various forms of the TEST instruction.
- **Reserved NOP** - Instructions encoded with the opcode 0F0DH or with the opcodes 0F18H through 0F1FH result in the behavior of the NOP (No Operation) instruction, except for those opcodes defined in the *Intel® 64 and IA-32 Architectures Software Developer's Manual, Volumes 2A, 2B, 2C & 2D*. The opcodes not so defined are considered "Reserved NOP" and may be used for future instructions which have no defined impact on existing architectural state. These reserved NOP opcodes are decoded with a ModR/M byte and typical instruction prefix options but still result in the behavior of the NOP instruction.
- **x87 Opcodes** - There are several groups of x87 opcodes which provide the same behavior as other x87 instructions. See Section 23.18.9 for the complete list.

There are a few reserved opcodes that provide unique behavior but do not provide capabilities that are not already available in the main instructions defined in the *Intel® 64 and IA-32 Architectures Software Developer's Manual, Volumes 2A, 2B, 2C & 2D*.

- **D6H** - When not in 64-bit mode SALC - Set AL to Cary flag. IF (CF=1), AL=FF, ELSE, AL=0 (#UD in 64-bit mode)
- **x87 Opcodes** - There are a few x87 opcodes with subtly different behavior from existing x87 instructions. See Section 23.18.9 for details.

23.16 NEW FLAGS IN THE EFLAGS REGISTER

The section titled "EFLAGS Register" in Chapter 3, "Basic Execution Environment," of the *Intel® 64 and IA-32 Architectures Software Developer's Manual, Volume 1*, shows the configuration of flags in the EFLAGS register for the P6 family processors. No new flags have been added to this register in the P6 family processors. The flags added to this register in the Pentium and Intel486 processors are described in the following sections.

The following flags were added to the EFLAGS register in the Pentium processor:

- VIF (virtual interrupt flag), bit 19.
- VIP (virtual interrupt pending), bit 20.
- ID (identification flag), bit 21.

The AC flag (bit 18) was added to the EFLAGS register in the Intel486 processor.

23.16.1 Using EFLAGS Flags to Distinguish Between 32-Bit IA-32 Processors

The following bits in the EFLAGS register that can be used to differentiate between the 32-bit IA-32 processors:

- Bit 18 (the AC flag) can be used to distinguish an Intel386 processor from the P6 family, Pentium, and Intel486 processors. Since it is not implemented on the Intel386 processor, it will always be clear.
- Bit 21 (the ID flag) indicates whether an application can execute the CPUID instruction. The ability to set and clear this bit indicates that the processor is a P6 family or Pentium processor. The CPUID instruction can then be used to determine which processor.

- Bits 19 (the VIF flag) and 20 (the VIP flag) will always be zero on processors that do not support virtual mode extensions, which includes all 32-bit processors prior to the Pentium processor.

See Chapter 20, "Processor Identification and Feature Determination," in the *Intel® 64 and IA-32 Architectures Software Developer's Manual, Volume 1*, for more information on identifying processors.

23.17 STACK OPERATIONS AND USER SOFTWARE

This section identifies the differences in stack implementation between the various IA-32 processors.

23.17.1 PUSH SP

The P6 family, Pentium, Intel486, Intel386, and Intel 286 processors push a different value on the stack for a PUSH SP instruction than the 8086 processor. The 32-bit processors push the value of the SP register before it is decremented as part of the push operation; the 8086 processor pushes the value of the SP register after it is decremented. If the value pushed is important, replace PUSH SP instructions with the following three instructions:

```
PUSH BP
MOV  BP, SP
XCHG BP, [BP]
```

This code functions as the 8086 processor PUSH SP instruction on the P6 family, Pentium, Intel486, Intel386, and Intel 286 processors.

23.17.2 EFLAGS Pushed on the Stack

The setting of the stored values of bits 12 through 15 (which includes the IOPL field and the NT flag) in the EFLAGS register by the PUSHF instruction, by interrupts, and by exceptions is different with the 32-bit IA-32 processors than with the 8086 and Intel 286 processors. The differences are as follows:

- 8086 processor—bits 12 through 15 are always set.
- Intel 286 processor—bits 12 through 15 are always cleared in real-address mode.
- 32-bit processors in real-address mode—bit 15 (reserved) is always cleared, and bits 12 through 14 have the last value loaded into them.

23.18 X87 FPU

This section addresses the issues that must be faced when porting floating-point software designed to run on earlier IA-32 processors and math coprocessors to a Pentium 4, Intel Xeon, P6 family, or Pentium processor with integrated x87 FPU. To software, a Pentium 4, Intel Xeon, or P6 family processor looks very much like a Pentium processor. Floating-point software which runs on a Pentium or Intel486 DX processor, or on an Intel486 SX processor/Intel 487 SX math coprocessor system or an Intel386 processor/Intel 387 math coprocessor system, will run with at most minor modifications on a Pentium 4, Intel Xeon, or P6 family processor. To port code directly from an Intel 286 processor/Intel 287 math coprocessor system or an Intel 8086 processor/8087 math coprocessor system to a Pentium 4, Intel Xeon, P6 family, or Pentium processor, certain additional issues must be addressed.

In the following sections, the term "32-bit x87 FPUs" refers to the P6 family, Pentium, and Intel486 DX processors, and to the Intel 487 SX and Intel 387 math coprocessors; the term "16-bit IA-32 math coprocessors" refers to the Intel 287 and 8087 math coprocessors.

23.18.1 Control Register CR0 Flags

The ET, NE, and MP flags in control register CR0 control the interface between the integer unit of an IA-32 processor and either its internal x87 FPU or an external math coprocessor. The effect of these flags in the various IA-32 processors are described in the following paragraphs.

The ET (extension type) flag (bit 4 of the CR0 register) is used in the Intel386 processor to indicate whether the math coprocessor in the system is an Intel 287 math coprocessor (flag is clear) or an Intel 387 DX math coprocessor (flag is set). This bit is hardwired to 1 in the P6 family, Pentium, and Intel486 processors.

The NE (Numeric Exception) flag (bit 5 of the CR0 register) is used in the P6 family, Pentium, and Intel486 processors to determine whether unmasked floating-point exceptions are reported internally through interrupt vector 16 (flag is set) or externally through an external interrupt (flag is clear). On a hardware reset, the NE flag is initialized to 0, so software using the automatic internal error-reporting mechanism must set this flag to 1. This flag is nonexistent on the Intel386 processor.

As on the Intel 286 and Intel386 processors, the MP (monitor coprocessor) flag (bit 1 of register CR0) determines whether the WAIT/FWAIT instructions or waiting-type floating-point instructions trap when the context of the x87 FPU is different from that of the currently-executing task. If the MP and TS flag are set, then a WAIT/FWAIT instruction and waiting instructions will cause a device-not-available exception (interrupt vector 7). The MP flag is used on the Intel 286 and Intel386 processors to support the use of a WAIT/FWAIT instruction to wait on a device other than a math coprocessor. The device reports its status through the BUSY# pin. Since the P6 family, Pentium, and Intel486 processors do not have such a pin, the MP flag has no relevant use and should be set to 1 for normal operation.

23.18.2 x87 FPU Status Word

This section identifies differences to the x87 FPU status word for the different IA-32 processors and math coprocessors, the reason for the differences, and their impact on software.

23.18.2.1 Condition Code Flags (C0 through C3)

The following information pertains to differences in the use of the condition code flags (C0 through C3) located in bits 8, 9, 10, and 14 of the x87 FPU status word.

After execution of an FINIT instruction or a hardware reset on a 32-bit x87 FPU, the condition code flags are set to 0. The same operations on a 16-bit IA-32 math coprocessor leave these flags intact (they contain their prior value). This difference in operation has no impact on software and provides a consistent state after reset.

Transcendental instruction results in the core range of the P6 family and Pentium processors may differ from the Intel486 DX processor and Intel 487 SX math coprocessor by 2 to 3 units in the last place (ulps)—(see "Transcendental Instruction Accuracy" in Chapter 8, "Programming with the x87 FPU," of the *Intel® 64 and IA-32 Architectures Software Developer's Manual, Volume 1*). As a result, the value saved in the C1 flag may also differ.

After an incomplete FPREM/FPREM1 instruction, the C0, C1, and C3 flags are set to 0 on the 32-bit x87 FPUs. After the same operation on a 16-bit IA-32 math coprocessor, these flags are left intact.

On the 32-bit x87 FPUs, the C2 flag serves as an incomplete flag for the FTAN instruction. On the 16-bit IA-32 math coprocessors, the C2 flag is undefined for the FPTAN instruction. This difference has no impact on software, because Intel 287 or 8087 programs do not check C2 after an FPTAN instruction. The use of this flag on later processors allows fast checking of operand range.

23.18.2.2 Stack Fault Flag

When unmasked stack overflow or underflow occurs on a 32-bit x87 FPU, the IE flag (bit 0) and the SF flag (bit 6) of the x87 FPU status word are set to indicate a stack fault and condition code flag C1 is set or cleared to indicate overflow or underflow, respectively. When unmasked stack overflow or underflow occurs on a 16-bit IA-32 math coprocessor, only the IE flag is set. Bit 6 is reserved on these processors. The addition of the SF flag on a 32-bit x87 FPU has no impact on software. Existing exception handlers need not change, but may be upgraded to take advantage of the additional information.

23.18.3 x87 FPU Control Word

Only affine closure is supported for infinity control on a 32-bit x87 FPU. The infinity control flag (bit 12 of the x87 FPU control word) remains programmable on these processors, but has no effect. This change was made to conform to the IEEE Standard 754 for Floating-Point Arithmetic. On a 16-bit IA-32 math coprocessor, both affine and projective closures are supported, as determined by the setting of bit 12. After a hardware reset, the default value of bit 12 is projective. Software that requires projective infinity arithmetic may give different results.

23.18.4 x87 FPU Tag Word

When loading the tag word of a 32-bit x87 FPU, using an FLDENV, FRSTOR, or FXRSTOR (Pentium III processor only) instruction, the processor examines the incoming tag and classifies the location only as empty or non-empty. Thus, tag values of 00, 01, and 10 are interpreted by the processor to indicate a non-empty location. The tag value of 11 is interpreted by the processor to indicate an empty location. Subsequent operations on a non-empty register always examine the value in the register, not the value in its tag. The FSTENV, FSAVE, and FXSAVE (Pentium III processor only) instructions examine the non-empty registers and put the correct values in the tags before storing the tag word.

The corresponding tag for a 16-bit IA-32 math coprocessor is checked before each register access to determine the class of operand in the register; the tag is updated after every change to a register so that the tag always reflects the most recent status of the register. Software can load a tag with a value that disagrees with the contents of a register (for example, the register contains a valid value, but the tag says special). Here, the 16-bit IA-32 math coprocessors honor the tag and do not examine the register.

Software written to run on a 16-bit IA-32 math coprocessor may not operate correctly on a 16-bit x87 FPU, if it uses the FLDENV, FRSTOR, or FXRSTOR instructions to change tags to values (other than to empty) that are different from actual register contents.

The encoding in the tag word for the 32-bit x87 FPUs for unsupported data formats (including pseudo-zero and unnormal) is special (10B), to comply with IEEE Standard 754. The encoding in the 16-bit IA-32 math coprocessors for pseudo-zero and unnormal is valid (00B) and the encoding for other unsupported data formats is special (10B). Code that recognizes the pseudo-zero or unnormal format as valid must therefore be changed if it is ported to a 32-bit x87 FPU.

23.18.5 Data Types

This section discusses the differences of data types for the various x87 FPUs and math coprocessors.

23.18.5.1 NaNs

The 32-bit x87 FPUs distinguish between signaling NaNs (SNaNs) and quiet NaNs (QNaNs). These x87 FPUs only generate QNaNs and normally do not generate an exception upon encountering a QNaN. An invalid-operation exception (#I) is generated only upon encountering a SNaN, except for the FCOM, FIST, and FBSTP instructions, which also generates an invalid-operation exceptions for a QNaNs. This behavior matches IEEE Standard 754.

The 16-bit IA-32 math coprocessors only generate one kind of NaN (the equivalent of a QNaN), but the raise an invalid-operation exception upon encountering any kind of NaN.

When porting software written to run on a 16-bit IA-32 math coprocessor to a 32-bit x87 FPU, uninitialized memory locations that contain QNaNs should be changed to SNaNs to cause the x87 FPU or math coprocessor to fault when uninitialized memory locations are referenced.

23.18.5.2 Pseudo-zero, Pseudo-NaN, Pseudo-infinity, and Unnormal Formats

The 32-bit x87 FPUs neither generate nor support the pseudo-zero, pseudo-NaN, pseudo-infinity, and unnormal formats. Whenever they encounter them in an arithmetic operation, they raise an invalid-operation exception. The 16-bit IA-32 math coprocessors define and support special handling for these formats. Support for these formats was dropped to conform with IEEE Standard 754 for Floating-Point Arithmetic.

This change should not impact software ported from 16-bit IA-32 math coprocessors to 32-bit x87 FPUs. The 32-bit x87 FPUs do not generate these formats, and therefore will not encounter them unless software explicitly loads them in the data registers. The only affect may be in how software handles the tags in the tag word (see also: Section 23.18.4, "x87 FPU Tag Word").

23.18.6 Floating-Point Exceptions

This section identifies the implementation differences in exception handling for floating-point instructions in the various x87 FPUs and math coprocessors.

23.18.6.1 Denormal Operand Exception (#D)

When the denormal operand exception is masked, the 32-bit x87 FPUs automatically normalize denormalized numbers when possible; whereas, the 16-bit IA-32 math coprocessors return a denormal result. A program written to run on a 16-bit IA-32 math coprocessor that uses the denormal exception solely to normalize denormalized operands is redundant when run on the 32-bit x87 FPUs. If such a program is run on 32-bit x87 FPUs, performance can be improved by masking the denormal exception. Floating-point programs run faster when the FPU performs normalization of denormalized operands.

The denormal operand exception is not raised for transcendental instructions and the FXTRACT instruction on the 16-bit IA-32 math coprocessors. This exception is raised for these instructions on the 32-bit x87 FPUs. The exception handlers ported to these latter processors need to be changed only if the handlers gives special treatment to different opcodes.

23.18.6.2 Numeric Overflow Exception (#O)

On the 32-bit x87 FPUs, when the numeric overflow exception is masked and the rounding mode is set to chop (toward 0), the result is the largest positive or smallest negative number. The 16-bit IA-32 math coprocessors do not signal the overflow exception when the masked response is not ∞; that is, they signal overflow only when the rounding control is not set to round to 0. If rounding is set to chop (toward 0), the result is positive or negative ∞. Under the most common rounding modes, this difference has no impact on existing software.

If rounding is toward 0 (chop), a program on a 32-bit x87 FPU produces, under overflow conditions, a result that is different in the least significant bit of the significand, compared to the result on a 16-bit IA-32 math coprocessor. The reason for this difference is IEEE Standard 754 compatibility.

When the overflow exception is not masked, the precision exception is flagged on the 32-bit x87 FPUs. When the result is stored in the stack, the significand is rounded according to the precision control (PC) field of the FPU control word or according to the opcode. On the 16-bit IA-32 math coprocessors, the precision exception is not flagged and the significand is not rounded. The impact on existing software is that if the result is stored on the stack, a program running on a 32-bit x87 FPU produces a different result under overflow conditions than on a 16-bit IA-32 math coprocessor. The difference is apparent only to the exception handler. This difference is for IEEE Standard 754 compatibility.

23.18.6.3 Numeric Underflow Exception (#U)

When the underflow exception is masked on the 32-bit x87 FPUs, the underflow exception is signaled when the result is tiny and inexact (see Section 4.9.1.5, "Numeric Underflow Exception (#U)" in *Intel® 64 and IA-32 Architectures Software Developer's Manual, Volume 1*). When the underflow exception is unmasked and the instruction is supposed to store the result on the stack, the significand is rounded to the appropriate precision (according to the PC flag in the FPU control word, for those instructions controlled by PC, otherwise to extended precision), after adjusting the exponent.

23.18.6.4 Exception Precedence

There is no difference in the precedence of the denormal-operand exception on the 32-bit x87 FPUs, whether it be masked or not. When the denormal-operand exception is not masked on the 16-bit IA-32 math coprocessors, it takes precedence over all other exceptions. This difference causes no impact on existing software, but some

unneeded normalization of denormalized operands is prevented on the Intel486 processor and Intel 387 math coprocessor.

23.18.6.5 CS and EIP For FPU Exceptions

On the Intel 32-bit x87 FPUs, the values from the CS and EIP registers saved for floating-point exceptions point to any prefixes that come before the floating-point instruction. On the 8087 math coprocessor, the saved CS and IP registers points to the floating-point instruction.

23.18.6.6 FPU Error Signals

The floating-point error signals to the P6 family, Pentium, and Intel486 processors do not pass through an interrupt controller; an INT# signal from an Intel 387, Intel 287 or 8087 math coprocessors does. If an 8086 processor uses another exception for the 8087 interrupt, both exception vectors should call the floating-point-error exception handler. Some instructions in a floating-point-error exception handler may need to be deleted if they use the interrupt controller. The P6 family, Pentium, and Intel486 processors have signals that, with the addition of external logic, support reporting for emulation of the interrupt mechanism used in many personal computers.

On the P6 family, Pentium, and Intel486 processors, an undefined floating-point opcode will cause an invalid-opcode exception (#UD, interrupt vector 6). Undefined floating-point opcodes, like legal floating-point opcodes, cause a device not available exception (#NM, interrupt vector 7) when either the TS or EM flag in control register CR0 is set. The P6 family, Pentium, and Intel486 processors do not check for floating-point error conditions on encountering an undefined floating-point opcode.

23.18.6.7 Assertion of the FERR# Pin

When using the MS-DOS compatibility mode for handing floating-point exceptions, the FERR# pin must be connected to an input to an external interrupt controller. An external interrupt is then generated when the FERR# output drives the input to the interrupt controller and the interrupt controller in turn drives the INTR pin on the processor.

For the P6 family and Intel386 processors, an unmasked floating-point exception always causes the FERR# pin to be asserted upon completion of the instruction that caused the exception. For the Pentium and Intel486 processors, an unmasked floating-point exception may cause the FERR# pin to be asserted either at the end of the instruction causing the exception or immediately before execution of the next floating-point instruction. (Note that the next floating-point instruction would not be executed until the pending unmasked exception has been handled.) See Appendix D, "Guidelines for Writing x87 FPU Extension Handlers," in the *Intel® 64 and IA-32 Architectures Software Developer's Manual, Volume 1*, for a complete description of the required mechanism for handling floating-point exceptions using the MS-DOS compatibility mode.

Using FERR# and IGNNE# to handle floating-point exception is deprecated by modern operating systems; this approach also limits newer processors to operate with one logical processor active.

23.18.6.8 Invalid Operation Exception On Denormals

An invalid-operation exception is not generated on the 32-bit x87 FPUs upon encountering a denormal value when executing a FSQRT, FDIV, or FPREM instruction or upon conversion to BCD or to integer. The operation proceeds by first normalizing the value. On the 16-bit IA-32 math coprocessors, upon encountering this situation, the invalid-operation exception is generated. This difference has no impact on existing software. Software running on the 32-bit x87 FPUs continues to execute in cases where the 16-bit IA-32 math coprocessors trap. The reason for this change was to eliminate an exception from being raised.

23.18.6.9 Alignment Check Exceptions (#AC)

If alignment checking is enabled, a misaligned data operand on the P6 family, Pentium, and Intel486 processors causes an alignment check exception (#AC) when a program or procedure is running at privilege-level 3, except for the stack portion of the FSAVE/FNSAVE, FXSAVE, FRSTOR, and FXRSTOR instructions.

23.18.6.10 Segment Not Present Exception During FLDENV

On the Intel486 processor, when a segment not present exception (#NP) occurs in the middle of an FLDENV instruction, it can happen that part of the environment is loaded and part not. In such cases, the FPU control word is left with a value of 007FH. The P6 family and Pentium processors ensure the internal state is correct at all times by attempting to read the first and last bytes of the environment before updating the internal state.

23.18.6.11 Device Not Available Exception (#NM)

The device-not-available exception (#NM, interrupt 7) will occur in the P6 family, Pentium, and Intel486 processors as described in Section 2.5, "Control Registers," Table 2-2, and Chapter 6, "Interrupt 7—Device Not Available Exception (#NM)."

23.18.6.12 Coprocessor Segment Overrun Exception

The coprocessor segment overrun exception (interrupt 9) does not occur in the P6 family, Pentium, and Intel486 processors. In situations where the Intel 387 math coprocessor would cause an interrupt 9, the P6 family, Pentium, and Intel486 processors simply abort the instruction. To avoid undetected segment overruns, it is recommended that the floating-point save area be placed in the same page as the TSS. This placement will prevent the FPU environment from being lost if a page fault occurs during the execution of an FLDENV, FRSTOR, or FXRSTOR instruction while the operating system is performing a task switch.

23.18.6.13 General Protection Exception (#GP)

A general-protection exception (#GP, interrupt 13) occurs if the starting address of a floating-point operand falls outside a segment's size. An exception handler should be included to report these programming errors.

23.18.6.14 Floating-Point Error Exception (#MF)

In real mode and protected mode (not including virtual-8086 mode), interrupt vector 16 must point to the floating-point exception handler. In virtual-8086 mode, the virtual-8086 monitor can be programmed to accommodate a different location of the interrupt vector for floating-point exceptions.

23.18.7 Changes to Floating-Point Instructions

This section identifies the differences in floating-point instructions for the various Intel FPU and math coprocessor architectures, the reason for the differences, and their impact on software.

23.18.7.1 FDIV, FPREM, and FSQRT Instructions

The 32-bit x87 FPUs support operations on denormalized operands and, when detected, an underflow exception can occur, for compatibility with the IEEE Standard 754. The 16-bit IA-32 math coprocessors do not operate on denormalized operands or return underflow results. Instead, they generate an invalid-operation exception when they detect an underflow condition. An existing underflow exception handler will require change only if it gives different treatment to different opcodes. Also, it is possible that fewer invalid-operation exceptions will occur.

23.18.7.2 FSCALE Instruction

With the 32-bit x87 FPUs, the range of the scaling operand is not restricted. If (0 < | ST(1) < 1), the scaling factor is 0; therefore, ST(0) remains unchanged. If the rounded result is not exact or if there was a loss of accuracy (masked underflow), the precision exception is signaled. With the 16-bit IA-32 math coprocessors, the range of the scaling operand is restricted. If (0 < | ST(1) | < 1), the result is undefined and no exception is signaled. The impact of this difference on exiting software is that different results are delivered on the 32-bit and 16-bit FPUs and math coprocessors when (0 < | ST(1) | < 1).

23.18.7.3 FPREM1 Instruction

The 32-bit x87 FPUs compute a partial remainder according to IEEE Standard 754. This instruction does not exist on the 16-bit IA-32 math coprocessors. The availability of the FPREM1 instruction has is no impact on existing software.

23.18.7.4 FPREM Instruction

On the 32-bit x87 FPUs, the condition code flags C0, C3, C1 in the status word correctly reflect the three low-order bits of the quotient following execution of the FPREM instruction. On the 16-bit IA-32 math coprocessors, the quotient bits are incorrect when performing a reduction of (64^N + M) when (N ≥ 1) and M is 1 or 2. This difference does not affect existing software; software that works around the bug should not be affected.

23.18.7.5 FUCOM, FUCOMP, and FUCOMPP Instructions

When executing the FUCOM, FUCOMP, and FUCOMPP instructions, the 32-bit x87 FPUs perform unordered compare according to IEEE Standard 754. These instructions do not exist on the 16-bit IA-32 math coprocessors. The availability of these new instructions has no impact on existing software.

23.18.7.6 FPTAN Instruction

On the 32-bit x87 FPUs, the range of the operand for the FPTAN instruction is much less restricted (| ST(0) | < 2^{63}) than on earlier math coprocessors. The instruction reduces the operand internally using an internal π/4 constant that is more accurate. The range of the operand is restricted to (| ST(0) | < π/4) on the 16-bit IA-32 math coprocessors; the operand must be reduced to this range using FPREM. This change has no impact on existing software. See also sections 8.3.8 and section 8.3.10 of the *Intel® 64 and IA-32 Architectures Software Developer's Manual, Volume 1* for more information on the accuracy of the FPTAN instruction.

23.18.7.7 Stack Overflow

On the 32-bit x87 FPUs, if an FPU stack overflow occurs when the invalid-operation exception is masked, the FPU returns the real, integer, or BCD-integer indefinite value to the destination operand, depending on the instruction being executed. On the 16-bit IA-32 math coprocessors, the original operand remains unchanged following a stack overflow, but it is loaded into register ST(1). This difference has no impact on existing software.

23.18.7.8 FSIN, FCOS, and FSINCOS Instructions

On the 32-bit x87 FPUs, these instructions perform three common trigonometric functions. These instructions do not exist on the 16-bit IA-32 math coprocessors. The availability of these instructions has no impact on existing software, but using them provides a performance upgrade. See also sections 8.3.8 and section 8.3.10 of the *Intel® 64 and IA-32 Architectures Software Developer's Manual, Volume 1* for more information on the accuracy of the FSIN, FCOS, and FSINCOS instructions.

23.18.7.9 FPATAN Instruction

On the 32-bit x87 FPUs, the range of operands for the FPATAN instruction is unrestricted. On the 16-bit IA-32 math coprocessors, the absolute value of the operand in register ST(0) must be smaller than the absolute value of the operand in register ST(1). This difference has impact on existing software.

23.18.7.10 F2XM1 Instruction

The 32-bit x87 FPUs support a wider range of operands (−1 < ST (0) < + 1) for the F2XM1 instruction. The supported operand range for the 16-bit IA-32 math coprocessors is (0 ≤ ST(0) ≤ 0.5). This difference has no impact on existing software.

23.18.7.11 FLD Instruction

On the 32-bit x87 FPUs, when using the FLD instruction to load an extended-real value, a denormal-operand exception is not generated because the instruction is not arithmetic. The 16-bit IA-32 math coprocessors do report a denormal-operand exception in this situation. This difference does not affect existing software.

On the 32-bit x87 FPUs, loading a denormal value that is in single- or double-real format causes the value to be converted to extended-real format. Loading a denormal value on the 16-bit IA-32 math coprocessors causes the value to be converted to an unnormal. If the next instruction is FXTRACT or FXAM, the 32-bit x87 FPUs will give a different result than the 16-bit IA-32 math coprocessors. This change was made for IEEE Standard 754 compatibility.

On the 32-bit x87 FPUs, loading an SNaN that is in single- or double-real format causes the FPU to generate an invalid-operation exception. The 16-bit IA-32 math coprocessors do not raise an exception when loading a signaling NaN. The invalid-operation exception handler for 16-bit math coprocessor software needs to be updated to handle this condition when porting software to 32-bit FPUs. This change was made for IEEE Standard 754 compatibility.

23.18.7.12 FXTRACT Instruction

On the 32-bit x87 FPUs, if the operand is 0 for the FXTRACT instruction, the divide-by-zero exception is reported and −∞ is delivered to register ST(1). If the operand is +∞, no exception is reported. If the operand is 0 on the 16-bit IA-32 math coprocessors, 0 is delivered to register ST(1) and no exception is reported. If the operand is +∞, the invalid-operation exception is reported. These differences have no impact on existing software. Software usually bypasses 0 and ∞. This change is due to the IEEE Standard 754 recommendation to fully support the "logb" function.

23.18.7.13 Load Constant Instructions

On 32-bit x87 FPUs, rounding control is in effect for the load constant instructions. Rounding control is not in effect for the 16-bit IA-32 math coprocessors. Results for the FLDPI, FLDLN2, FLDLG2, and FLDL2E instructions are the same as for the 16-bit IA-32 math coprocessors when rounding control is set to round to nearest or round to +∞. They are the same for the FLDL2T instruction when rounding control is set to round to nearest, round to −∞, or round to zero. Results are different from the 16-bit IA-32 math coprocessors in the least significant bit of the mantissa if rounding control is set to round to −∞ or round to 0 for the FLDPI, FLDLN2, FLDLG2, and FLDL2E instructions; they are different for the FLDL2T instruction if round to +∞ is specified. These changes were implemented for compatibility with IEEE Standard 754 for Floating-Point Arithmetic recommendations.

23.18.7.14 FXAM Instruction

With the 32-bit x87 FPUs, if the FPU encounters an empty register when executing the FXAM instruction, it not generate combinations of C0 through C3 equal to 1101 or 1111. The 16-bit IA-32 math coprocessors may generate these combinations, among others. This difference has no impact on existing software; it provides a performance upgrade to provide repeatable results.

23.18.7.15 FSAVE and FSTENV Instructions

With the 32-bit x87 FPUs, the address of a memory operand pointer stored by FSAVE or FSTENV is undefined if the previous floating-point instruction did not refer to memory

23.18.8 Transcendental Instructions

The floating-point results of the P6 family and Pentium processors for transcendental instructions in the core range may differ from the Intel486 processors by about 2 or 3 ulps (see "Transcendental Instruction Accuracy" in Chapter 8, "Programming with the x87 FPU," of the *Intel® 64 and IA-32 Architectures Software Developer's Manual, Volume 1*). Condition code flag C1 of the status word may differ as a result. The exact threshold for underflow and overflow will vary by a few ulps. The P6 family and Pentium processors' results will have a worst case error of less than 1 ulp when rounding to the nearest-even and less than 1.5 ulps when rounding in other modes. The transcen-

dental instructions are guaranteed to be monotonic, with respect to the input operands, throughout the domain supported by the instruction.

Transcendental instructions may generate different results in the round-up flag (C1) on the 32-bit x87 FPUs. The round-up flag is undefined for these instructions on the 16-bit IA-32 math coprocessors. This difference has no impact on existing software.

23.18.9 Obsolete Instructions and Undefined Opcodes

The 8087 math coprocessor instructions FENI and FDISI, and the Intel 287 math coprocessor instruction FSETPM are treated as integer NOP instructions in the 32-bit x87 FPUs. If these opcodes are detected in the instruction stream, no specific operation is performed and no internal states are affected. FSETPM informed the Intel 287 math coprocessor that the processor was in protected mode. The 32-bit x87 FPUs handle all addressing and exception-pointer information, whether in protected mode or not.

For compatibility with prior generations there are a few reserved x87 opcodes which do not result in an invalid-opcode (#UD) exception, but rather result in the same behavior as existing defined x87 instructions. In the interest of standardization, it is recommended that the opcodes defined in the *Intel® 64 and IA-32 Architectures Software Developer's Manual, Volumes 2A, 2B, 2C & 2D* be used for these operations for standardization.

- DCD0H through DCD7H - Behaves the same as FCOM, D8D0H through D8D7H.
- DCD8H through DCDFH - Behaves the same as FCOMP, D8D8H through D8DFH.
- D0C8H through D0CFH - Behaves the same as FXCH, D9C8H through D9CFH.
- DED0H through DED7H - Behaves the same as FCOMP, D8D8H through D8DFH.
- DFD0H through DFD7H - Behaves the same as FSTP, DDD8H through DDDFH.
- DFC8H through DFCFH - Behaves the same as FXCH, D9C8H through D9CFH.
- DFD8H through DFDFH - Behaves the same as FSTP, DDD8H through DDDFH.

There are a few reserved x87 opcodes which provide unique behavior but do not provide capabilities which are not already available in the main instructions defined in the *Intel® 64 and IA-32 Architectures Software Developer's Manual, Volumes 2A, 2B, 2C & 2D*.

- D9D8H through D9DFH - Behaves the same as FSTP (DDD8H through DDDFH) but won't cause a stack underflow exception.
- DFC0H through DFC7H - Behaves the same as FFREE (DDC0H through DDD7H) with the addition of an x87 stack POP.

23.18.10 WAIT/FWAIT Prefix Differences

On the Intel486 processor, when a WAIT/FWAIT instruction precedes a floating-point instruction (one which itself automatically synchronizes with the previous floating-point instruction), the WAIT/FWAIT instruction is treated as a no-op. Pending floating-point exceptions from a previous floating-point instruction are processed not on the WAIT/FWAIT instruction but on the floating-point instruction following the WAIT/FWAIT instruction. In such a case, the report of a floating-point exception may appear one instruction later on the Intel486 processor than on a P6 family or Pentium FPU, or on Intel 387 math coprocessor.

23.18.11 Operands Split Across Segments and/or Pages

On the P6 family, Pentium, and Intel486 processor FPUs, when the first half of an operand to be written is inside a page or segment and the second half is outside, a memory fault can cause the first half to be stored but not the second half. In this situation, the Intel 387 math coprocessor stores nothing.

23.18.12 FPU Instruction Synchronization

On the 32-bit x87 FPUs, all floating-point instructions are automatically synchronized; that is, the processor automatically waits until the previous floating-point instruction has completed before completing the next floating-point

instruction. No explicit WAIT/FWAIT instructions are required to assure this synchronization. For the 8087 math coprocessors, explicit waits are required before each floating-point instruction to ensure synchronization. Although 8087 programs having explicit WAIT instructions execute perfectly on the 32-bit IA-32 processors without reassembly, these WAIT instructions are unnecessary.

23.19 SERIALIZING INSTRUCTIONS

Certain instructions have been defined to serialize instruction execution to ensure that modifications to flags, registers, and memory are completed before the next instruction is executed (or in P6 family processor terminology "committed to machine state"). Because the P6 family processors use branch-prediction and out-of-order execution techniques to improve performance, instruction execution is not generally serialized until the results of an executed instruction are committed to machine state (see Chapter 2, "Intel® 64 and IA-32 Architectures," in the *Intel® 64 and IA-32 Architectures Software Developer's Manual, Volume 1*).

As a result, at places in a program or task where it is critical to have execution completed for all previous instructions before executing the next instruction (for example, at a branch, at the end of a procedure, or in multiprocessor dependent code), it is useful to add a serializing instruction. See Section 9.3, "Serializing Instructions," for more information on serializing instructions.

23.20 FPU AND MATH COPROCESSOR INITIALIZATION

Table 10-1 shows the states of the FPUs in the P6 family, Pentium, Intel486 processors and of the Intel 387 math coprocessor and Intel 287 coprocessor following a power-up, reset, or INIT, or following the execution of an FINIT/FNINIT instruction. The following is some additional compatibility information concerning the initialization of x87 FPUs and math coprocessors.

23.20.1 Intel® 387 and Intel® 287 Math Coprocessor Initialization

Following an Intel386 processor reset, the processor identifies its coprocessor type (Intel® 287 or Intel® 387 DX math coprocessor) by sampling its ERROR# input some time after the falling edge of RESET# signal and before execution of the first floating-point instruction. The Intel 287 coprocessor keeps its ERROR# output in inactive state after hardware reset; the Intel 387 coprocessor keeps its ERROR# output in active state after hardware reset.

Upon hardware reset or execution of the FINIT/FNINIT instruction, the Intel 387 math coprocessor signals an error condition. The P6 family, Pentium, and Intel486 processors, like the Intel 287 coprocessor, do not.

23.20.2 Intel486 SX Processor and Intel 487 SX Math Coprocessor Initialization

When initializing an Intel486 SX processor and an Intel 487 SX math coprocessor, the initialization routine should check the presence of the math coprocessor and should set the FPU related flags (EM, MP, and NE) in control register CR0 accordingly (see Section 2.5, "Control Registers," for a complete description of these flags). Table 23-2 gives the recommended settings for these flags when the math coprocessor is present. The FSTCW instruction will give a value of FFFFH for the Intel486 SX microprocessor and 037FH for the Intel 487 SX math coprocessor.

Table 23-2. Recommended Values of the EM, MP, and NE Flags for Intel486 SX Microprocessor/Intel 487 SX Math Coprocessor System

CR0 Flags	Intel486 SX Processor Only	Intel 487 SX Math Coprocessor Present
EM	1	0
MP	0	1
NE	1	0, for MS-DOS* systems 1, for user-defined exception handler

The EM and MP flags in register CR0 are interpreted as shown in Table 23-3.

Table 23-3. EM and MP Flag Interpretation

EM	MP	Interpretation
0	0	Floating-point instructions are passed to FPU; WAIT/FWAIT and other waiting-type instructions ignore TS.
0	1	Floating-point instructions are passed to FPU; WAIT/FWAIT and other waiting-type instructions test TS.
1	0	Floating-point instructions trap to emulator; WAIT/FWAIT and other waiting-type instructions ignore TS.
1	1	Floating-point instructions trap to emulator; WAIT/FWAIT and other waiting-type instructions test TS.

Following is an example code sequence to initialize the system and check for the presence of Intel486 SX processor/Intel 487 SX math coprocessor.

```
fninit
fstcw mem_loc
mov ax, mem_loc
cmp ax, 037fh
jz Intel487_SX_Math_CoProcessor_present     ;ax=037fh
jmp Intel486_SX_microprocessor_present      ;ax=ffffh
```

If the Intel 487 SX math coprocessor is not present, the following code can be run to set the CR0 register for the Intel486 SX processor.

```
mov eax, cr0
and eax, fffffffdh  ;make MP=0
or eax, 0024h       ;make EM=1, NE=1
mov cr0, eax
```

This initialization will cause any floating-point instruction to generate a device not available exception (#NH), interrupt 7. The software emulation will then take control to execute these instructions. This code is not required if an Intel 487 SX math coprocessor is present in the system. In that case, the typical initialization routine for the Intel486 SX microprocessor will be adequate.

Also, when designing an Intel486 SX processor based system with an Intel 487 SX math coprocessor, timing loops should be independent of frequency and clocks per instruction. One way to attain this is to implement these loops in hardware and not in software (for example, BIOS).

23.21 CONTROL REGISTERS

The following sections identify the new control registers and control register flags and fields that were introduced to the 32-bit IA-32 in various processor families. See Figure 2-7 for the location of these flags and fields in the control registers.

The Pentium III processor introduced one new control flag in control register CR4:

- OSXMMEXCPT (bit 10) — The OS will set this bit if it supports unmasked SIMD floating-point exceptions.

The Pentium II processor introduced one new control flag in control register CR4:

- OSFXSR (bit 9) — The OS supports saving and restoring the Pentium III processor state during context switches.

The Pentium Pro processor introduced three new control flags in control register CR4:

- PAE (bit 5) — Physical address extension. Enables paging mechanism to reference extended physical addresses when set; restricts physical addresses to 32 bits when clear (see also: Section 23.22.1.1, "Physical Memory Addressing Extension").
- PGE (bit 7) — Page global enable. Inhibits flushing of frequently-used or shared pages on CR3 writes (see also: Section 23.22.1.2, "Global Pages").
- PCE (bit 8) — Performance-monitoring counter enable. Enables execution of the RDPMC instruction at any protection level.

The content of CR4 is 0H following a hardware reset.

Control register CR4 was introduced in the Pentium processor. This register contains flags that enable certain new extensions provided in the Pentium processor:

- VME — Virtual-8086 mode extensions. Enables support for a virtual interrupt flag in virtual-8086 mode (see Section 21.3, "Interrupt and Exception Handling in Virtual-8086 Mode").
- PVI — Protected-mode virtual interrupts. Enables support for a virtual interrupt flag in protected mode (see Section 21.4, "Protected-Mode Virtual Interrupts").
- TSD — Time-stamp disable. Restricts the execution of the RDTSC instruction to procedures running at privileged level 0.
- DE — Debugging extensions. Causes an undefined opcode (#UD) exception to be generated when debug registers DR4 and DR5 are references for improved performance (see Section 23.23.3, "Debug Registers DR4 and DR5").
- PSE — Page size extensions. Enables 4-MByte pages with 32-bit paging when set (see Section 4.3, "32-Bit Paging").
- MCE — Machine-check enable. Enables the machine-check exception, allowing exception handling for certain hardware error conditions (see Chapter 16, "Machine-Check Architecture").

The Intel486 processor introduced five new flags in control register CR0:

- NE — Numeric error. Enables the normal mechanism for reporting floating-point numeric errors.
- WP — Write protect. Write-protects read-only pages against supervisor-mode accesses.
- AM — Alignment mask. Controls whether alignment checking is performed. Operates in conjunction with the AC (Alignment Check) flag.
- NW — Not write-through. Enables write-throughs and cache invalidation cycles when clear and disables invalidation cycles and write-throughs that hit in the cache when set.
- CD — Cache disable. Enables the internal cache when clear and disables the cache when set.

The Intel486 processor introduced two new flags in control register CR3:

- PCD — Page-level cache disable. The state of this flag is driven on the PCD# pin during bus cycles that are not paged, such as interrupt acknowledge cycles, when paging is enabled. The PCD# pin is used to control caching in an external cache on a cycle-by-cycle basis.
- PWT — Page-level write-through. The state of this flag is driven on the PWT# pin during bus cycles that are not paged, such as interrupt acknowledge cycles, when paging is enabled. The PWT# pin is used to control write through in an external cache on a cycle-by-cycle basis.

23.22 MEMORY MANAGEMENT FACILITIES

The following sections describe the new memory management facilities available in the various IA-32 processors and some compatibility differences.

23.22.1 New Memory Management Control Flags

The Pentium Pro processor introduced three new memory management features: physical memory addressing extension, the global bit in page-table entries, and general support for larger page sizes. These features are only available when operating in protected mode.

23.22.1.1 Physical Memory Addressing Extension

The new PAE (physical address extension) flag in control register CR4, bit 5, may enable additional address lines on the processor, allowing extended physical addresses. This option can only be used when paging is enabled, using a new page-table mechanism provided to support the larger physical address range (see Section 4.1, "Paging Modes and Control Bits").

23.22.1.2 Global Pages

The new PGE (page global enable) flag in control register CR4, bit 7, provides a mechanism for preventing frequently used pages from being flushed from the translation lookaside buffer (TLB). When this flag is set, frequently used pages (such as pages containing kernel procedures or common data tables) can be marked global by setting the global flag in a page-directory or page-table entry.

On a task switch or a write to control register CR3 (which normally causes the TLBs to be flushed), the entries in the TLB marked global are not flushed. Marking pages global in this manner prevents unnecessary reloading of the TLB due to TLB misses on frequently used pages. See Section 4.10, "Caching Translation Information" for a detailed description of this mechanism.

23.22.1.3 Larger Page Sizes

The P6 family processors support large page sizes. For 32-bit paging, this facility is enabled with the PSE (page size extension) flag in control register CR4, bit 4. When this flag is set, the processor supports either 4-KByte or 4-MByte page sizes. PAE paging and 4-level paging[1] support 2-MByte pages regardless of the value of CR4.PSE (see Section 4.4, "PAE Paging" and Section 4.5, "4-Level Paging and 5-Level Paging"). See Chapter 4, "Paging," for more information about large page sizes.

23.22.2 CD and NW Cache Control Flags

The CD and NW flags in control register CR0 were introduced in the Intel486 processor. In the P6 family and Pentium processors, these flags are used to implement a writeback strategy for the data cache; in the Intel486 processor, they implement a write-through strategy. See Table 12-5 for a comparison of these bits on the P6 family, Pentium, and Intel486 processors. For complete information on caching, see Chapter 12, "Memory Cache Control."

23.22.3 Descriptor Types and Contents

Operating-system code that manages space in descriptor tables often contains an invalid value in the access-rights field of descriptor-table entries to identify unused entries. Access rights values of 80H and 00H remain invalid for the P6 family, Pentium, Intel486, Intel386, and Intel 286 processors. Other values that were invalid on the Intel 286 processor may be valid on the 32-bit processors because uses for these bits have been defined.

1. Earlier versions of this manual used the term "IA-32e paging" to identify 4-level paging.

23.22.4 Changes in Segment Descriptor Loads

On the Intel386 processor, loading a segment descriptor always causes a locked read and write to set the accessed bit of the descriptor. On the P6 family, Pentium, and Intel486 processors, the locked read and write occur only if the bit is not already set.

23.23 DEBUG FACILITIES

The P6 family and Pentium processors include extensions to the Intel486 processor debugging support for breakpoints. To use the new breakpoint features, it is necessary to set the DE flag in control register CR4.

23.23.1 Differences in Debug Register DR6

It is not possible to write a 1 to reserved bit 12 in debug status register DR6 on the P6 family and Pentium processors; however, it is possible to write a 1 in this bit on the Intel486 processor. See Table 10-1 for the different setting of this register following a power-up or hardware reset.

23.23.2 Differences in Debug Register DR7

The P6 family and Pentium processors determines the type of breakpoint access by the R/W0 through R/W3 fields in debug control register DR7 as follows:

00 Break on instruction execution only.

01 Break on data writes only.

10 Undefined if the DE flag in control register CR4 is cleared; break on I/O reads or writes but not instruction fetches if the DE flag in control register CR4 is set.

11 Break on data reads or writes but not instruction fetches.

On the P6 family and Pentium processors, reserved bits 11, 12, 14, and 15 are hard-wired to 0. On the Intel486 processor, however, bit 12 can be set. See Table 10-1 for the different settings of this register following a power-up or hardware reset.

23.23.3 Debug Registers DR4 and DR5

Although the DR4 and DR5 registers are documented as reserved, previous generations of processors aliased references to these registers to debug registers DR6 and DR7, respectively. When debug extensions are not enabled (the DE flag in control register CR4 is cleared), the P6 family and Pentium processors remain compatible with existing software by allowing these aliased references. When debug extensions are enabled (the DE flag is set), attempts to reference registers DR4 or DR5 will result in an invalid-opcode exception (#UD).

23.24 RECOGNITION OF BREAKPOINTS

For the Pentium processor, it is recommended that debuggers execute the LGDT instruction before returning to the program being debugged to ensure that breakpoints are detected. This operation does not need to be performed on the P6 family, Intel486, or Intel386 processors.

The implementation of test registers on the Intel486 processor used for testing the cache and TLB has been redesigned using MSRs on the P6 family and Pentium processors. (Note that MSRs used for this function are different on the P6 family and Pentium processors.) The MOV to and from test register instructions generate invalid-opcode exceptions (#UD) on the P6 family processors.

23.25 EXCEPTIONS AND/OR EXCEPTION CONDITIONS

This section describes the new exceptions and exception conditions added to the 32-bit IA-32 processors and implementation differences in existing exception handling. See Chapter 6, "Interrupt and Exception Handling," for a detailed description of the IA-32 exceptions.

The Pentium III processor introduced new state with the XMM registers. Computations involving data in these registers can produce exceptions. A new MXCSR control/status register is used to determine which exception or exceptions have occurred. When an exception associated with the XMM registers occurs, an interrupt is generated.

- SIMD floating-point exception (#XM, interrupt 19) — New exceptions associated with the SIMD floating-point registers and resulting computations.

No new exceptions were added with the Pentium Pro and Pentium II processors. The set of available exceptions is the same as for the Pentium processor. However, the following exception condition was added to the IA-32 with the Pentium Pro processor:

- Machine-check exception (#MC, interrupt 18) — New exception conditions. Many exception conditions have been added to the machine-check exception and a new architecture has been added for handling and reporting on hardware errors. See Chapter 16, "Machine-Check Architecture," for a detailed description of the new conditions.

The following exceptions and/or exception conditions were added to the IA-32 with the Pentium processor:

- Machine-check exception (#MC, interrupt 18) — New exception. This exception reports parity and other hardware errors. It is a model-specific exception and may not be implemented or implemented differently in future processors. The MCE flag in control register CR4 enables the machine-check exception. When this bit is clear (which it is at reset), the processor inhibits generation of the machine-check exception.
- General-protection exception (#GP, interrupt 13) — New exception condition added. An attempt to write a 1 to a reserved bit position of a special register causes a general-protection exception to be generated.
- Page-fault exception (#PF, interrupt 14) — New exception condition added. When a 1 is detected in any of the reserved bit positions of a page-table entry, page-directory entry, or page-directory pointer during address translation, a page-fault exception is generated.

The following exception was added to the Intel486 processor:

- Alignment-check exception (#AC, interrupt 17) — New exception. Reports unaligned memory references when alignment checking is being performed.

The following exceptions and/or exception conditions were added to the Intel386 processor:

- Divide-error exception (#DE, interrupt 0)
  - — Change in exception handling. Divide-error exceptions on the Intel386 processors always leave the saved CS:IP value pointing to the instruction that failed. On the 8086 processor, the CS:IP value points to the next instruction.
  - — Change in exception handling. The Intel386 processors can generate the largest negative number as a quotient for the IDIV instruction (80H and 8000H). The 8086 processor generates a divide-error exception instead.
- Invalid-opcode exception (#UD, interrupt 6) — New exception condition added. Improper use of the LOCK instruction prefix can generate an invalid-opcode exception.
- Page-fault exception (#PF, interrupt 14) — New exception condition added. If paging is enabled in a 16-bit program, a page-fault exception can be generated as follows. Paging can be used in a system with 16-bit tasks if all tasks use the same page directory. Because there is no place in a 16-bit TSS to store the PDBR register, switching to a 16-bit task does not change the value of the PDBR register. Tasks ported from the Intel 286 processor should be given 32-bit TSSs so they can make full use of paging.
- General-protection exception (#GP, interrupt 13) — New exception condition added. The Intel386 processor sets a limit of 15 bytes on instruction length. The only way to violate this limit is by putting redundant prefixes before an instruction. A general-protection exception is generated if the limit on instruction length is violated. The 8086 processor has no instruction length limit.

23.25.1 Machine-Check Architecture

The Pentium Pro processor introduced a new architecture to the IA-32 for handling and reporting on machine-check exceptions. This machine-check architecture (described in detail in Chapter 16, "Machine-Check Architecture") greatly expands the ability of the processor to report on internal hardware errors.

23.25.2 Priority of Exceptions

The priority of exceptions are broken down into several major categories:

1. Traps on the previous instruction
2. External interrupts
3. Faults on fetching the next instruction
4. Faults in decoding the next instruction
5. Faults on executing an instruction

There are no changes in the priority of these major categories between the different processors, however, exceptions within these categories are implementation dependent and may change from processor to processor.

23.25.3 Exception Conditions of Legacy SIMD Instructions Operating on MMX Registers

MMX instructions and a subset of SSE, SSE2, SSSE3 instructions operate on MMX registers. The exception conditions of these instructions are described in the following tables.

Table 23-4. Exception Conditions for Legacy SIMD/MMX Instructions with FP Exception and 16-Byte Alignment

Exception	Real	Virtual-8086	Protected and Compatibility	64-bit	Cause of Exception
Invalid Opcode, #UD	X	X	X	X	If an unmasked SIMD floating-point exception and CR4.OSXMMEXCPT[bit 10] = 0.
	X	X	X	X	If CR0.EM[bit 2] = 1. If CR4.OSFXSR[bit 9] = 0.
	X	X	X	X	If preceded by a LOCK prefix (F0H)
	X	X	X	X	If any corresponding CPUID feature flag is '0'
#MF	X	X	X	X	If there is a pending X87 FPU exception
#NM	X	X	X	X	If CR0.TS[bit 3]=1
Stack, SS(0)			X		For an illegal address in the SS segment
				X	If a memory address referencing the SS segment is in a non-canonical form
General Protection, #GP(0)	X	X	X	X	Legacy SSE: Memory operand is not 16-byte aligned
			X		For an illegal memory operand effective address in the CS, DS, ES, FS or GS segments.
				X	If the memory address is in a non-canonical form.
	X	X			If any part of the operand lies outside the effective address space from 0 to FFFFH
#PF(fault-code)		X	X	X	For a page fault
#XM	X	X	X	X	If an unmasked SIMD floating-point exception and CR4.OSXMMEXCPT[bit 10] = 1
Applicable Instructions	CVTPD2PI, CVTTPD2PI				

Table 23-5. Exception Conditions for Legacy SIMD/MMX Instructions with XMM and FP Exception

Exception	Real	Virtual-8086	Protected and Compatibility	64-bit	Cause of Exception
Invalid Opcode, #UD	X	X	X	X	If an unmasked SIMD floating-point exception and CR4.OSXMMEXCPT[bit 10] = 0.
	X	X	X	X	If CR0.EM[bit 2] = 1. If CR4.OSFXSR[bit 9] = 0.
	X	X	X	X	If preceded by a LOCK prefix (F0H)
	X	X	X	X	If any corresponding CPUID feature flag is '0'
#MF	X	X	X	X	If there is a pending X87 FPU exception
#NM	X	X	X	X	If CR0.TS[bit 3]=1
Stack, SS(0)			X		For an illegal address in the SS segment
				X	If a memory address referencing the SS segment is in a non-canonical form
General Protection, #GP(0)			X		For an illegal memory operand effective address in the CS, DS, ES, FS or GS segments.
				X	If the memory address is in a non-canonical form.
	X	X			If any part of the operand lies outside the effective address space from 0 to FFFFH
#PF(fault-code)		X	X	X	For a page fault
Alignment Check #AC(0)		X	X	X	If alignment checking is enabled and an unaligned memory reference is made while the current privilege level is 3.
SIMD Floating-point Exception, #XM	X	X	X	X	If an unmasked SIMD floating-point exception and CR4.OSXMMEXCPT[bit 10] = 1
Applicable Instructions	CVTPI2PS, CVTPS2PI, CVTTPS2PI				

Table 23-6. Exception Conditions for Legacy SIMD/MMX Instructions with XMM and without FP Exception

Exception	Real	Virtual-8086	Protected and Compatibility	64-bit	Cause of Exception
Invalid Opcode, #UD	X	X	X	X	If CR0.EM[bit 2] = 1. If CR4.OSFXSR[bit 9] = 0.
	X	X	X	X	If preceded by a LOCK prefix (F0H)
	X	X	X	X	If any corresponding CPUID feature flag is '0'
#MF[1]	X	X	X	X	If there is a pending X87 FPU exception
#NM	X	X	X	X	If CR0.TS[bit 3]=1
Stack, SS(0)			X		For an illegal address in the SS segment
				X	If a memory address referencing the SS segment is in a non-canonical form
General Protection, #GP(0)			X		For an illegal memory operand effective address in the CS, DS, ES, FS or GS segments.
				X	If the memory address is in a non-canonical form.
	X	X			If any part of the operand lies outside the effective address space from 0 to FFFFH
#PF(fault-code)		X	X	X	For a page fault
Alignment Check #AC(0)		X	X	X	If alignment checking is enabled and an unaligned memory reference is made while the current privilege level is 3.
Applicable Instructions	CVTPI2PD				

NOTES:

1. Applies to "CVTPI2PD xmm, mm" but not "CVTPI2PD xmm, m64".

Table 23-7. Exception Conditions for SIMD/MMX Instructions with Memory Reference

Exception	Real	Virtual-8086	Protected and Compatibility	64-bit	Cause of Exception
Invalid Opcode, #UD	X	X	X	X	If CR0.EM[bit 2] = 1.
	X	X	X	X	If preceded by a LOCK prefix (F0H)
	X	X	X	X	If any corresponding CPUID feature flag is '0'
#MF	X	X	X	X	If there is a pending X87 FPU exception
#NM	X	X	X	X	If CR0.TS[bit 3]=1
Stack, SS(0)			X		For an illegal address in the SS segment
				X	If a memory address referencing the SS segment is in a non-canonical form
General Protection, #GP(0)			X		For an illegal memory operand effective address in the CS, DS, ES, FS or GS segments.
				X	If the memory address is in a non-canonical form.
	X	X			If any part of the operand lies outside the effective address space from 0 to FFFFH
#PF(fault-code)		X	X	X	For a page fault
Alignment Check #AC(0)		X	X	X	If alignment checking is enabled and an unaligned memory reference is made while the current privilege level is 3.
Applicable Instructions	PABSB, PABSD, PABSW, PACKSSWB, PACKSSDW, PACKUSWB, PADDB, PADDD, PADDQ, PADDW, PADDSB, PADDSW, PADDUSB, PADDUSW, PALIGNR, PAND, PANDN, PAVGB, PAVGW, PCMPEQB, PCMPEQD, PCMPEQW, PCMPGTB, PCMPGTD, PCMPGTW, PHADDD, PHADDW, PHADDSW, PHSUBD, PHSUBW, PHSUBSW, PINSRW, PMADDUBSW, PMADDWD, PMAXSW, PMAXUB, PMINSW, PMINUB, PMULHRSW, PMULHUW, PMULHW, PMULLW, PMULUDQ, PSADBW, PSHUFB, PSHUFW, PSIGNB PSIGND PSIGNW, PSLLW, PSLLD, PSLLQ, PSRAD, PSRAW, PSRLW, PSRLD, PSRLQ, PSUBB, PSUBD, PSUBQ, PSUBW, PSUBSB, PSUBSW, PSUBUSB, PSUBUSW, PUNPCKHBW, PUNPCKHWD, PUNPCKHDQ, PUNPCKLBW, PUNPCKLWD, PUNPCKLDQ, PXOR				

Table 23-8. Exception Conditions for Legacy SIMD/MMX Instructions without FP Exception

Exception	Real	Virtual-8086	Protected and Compatibility	64-bit	Cause of Exception
Invalid Opcode, #UD	X	X	X	X	If CR0.EM[bit 2] = 1. If ModR/M.mod ≠ 11b[1]
	X	X	X	X	If preceded by a LOCK prefix (F0H)
	X	X	X	X	If any corresponding CPUID feature flag is '0'
#MF	X	X	X	X	If there is a pending X87 FPU exception
#NM	X	X	X	X	If CR0.TS[bit 3]=1
Stack, SS(0)			X		For an illegal address in the SS segment
				X	If a memory address referencing the SS segment is in a non-canonical form
#GP(0)			X		For an illegal memory operand effective address in the CS, DS, ES, FS or GS segments. If the destination operand is in a non-writable segment.[2] If the DS, ES, FS, or GS register contains a NULL segment selector.[3]
				X	If the memory address is in a non-canonical form.
	X	X			If any part of the operand lies outside the effective address space from 0 to FFFFH
#PF(fault-code)		X	X	X	For a page fault
#AC(0)		X	X	X	If alignment checking is enabled and an unaligned memory reference is made while the current privilege level is 3.
Applicable Instructions	MASKMOVQ, MOVNTQ, "MOVQ (mmreg)"				

NOTES:

1. Applies to MASKMOVQ only.
2. Applies to MASKMOVQ and MOVQ (mmreg) only.
3. Applies to MASKMOVQ only.

Table 23-9. Exception Conditions for Legacy SIMD/MMX Instructions without Memory Reference

Exception	Real	Virtual-8086	Protected and Compatibility	64-bit	Cause of Exception
Invalid Opcode, #UD	X	X	X	X	If CR0.EM[bit 2] = 1.
	X	X	X	X	If preceded by a LOCK prefix (F0H)
	X	X	X	X	If any corresponding CPUID feature flag is '0'
#MF	X	X	X	X	If there is a pending X87 FPU exception
#NM			X	X	If CR0.TS[bit 3]=1
Applicable Instructions	PEXTRW, PMOVMSKB				

23.26 INTERRUPTS

The following differences in handling interrupts are found among the IA-32 processors.

23.26.1 Interrupt Propagation Delay

External hardware interrupts may be recognized on different instruction boundaries on the P6 family, Pentium, Intel486, and Intel386 processors, due to the superscaler designs of the P6 family and Pentium processors. Therefore, the EIP pushed onto the stack when servicing an interrupt may be different for the P6 family, Pentium, Intel486, and Intel386 processors.

23.26.2 NMI Interrupts

After an NMI interrupt is recognized by the P6 family, Pentium, Intel486, Intel386, and Intel 286 processors, the NMI interrupt is masked until the first IRET instruction is executed, unlike the 8086 processor.

23.26.3 IDT Limit

The LIDT instruction can be used to set a limit on the size of the IDT. A double-fault exception (#DF) is generated if an interrupt or exception attempts to read a vector beyond the limit. Shutdown then occurs on the 32-bit IA-32 processors if the double-fault handler vector is beyond the limit. (The 8086 processor does not have a shutdown mode nor a limit.)

23.27 ADVANCED PROGRAMMABLE INTERRUPT CONTROLLER (APIC)

The Advanced Programmable Interrupt Controller (APIC), referred to in this book as the **local APIC**, was introduced into the IA-32 processors with the Pentium processor (beginning with the 735/90 and 815/100 models) and is included in the Pentium 4, Intel Xeon, and P6 family processors. The features and functions of the local APIC are derived from the Intel 82489DX external APIC, which was used with the Intel486 and early Pentium processors. Additional refinements of the local APIC architecture were incorporated in the Pentium 4 and Intel Xeon processors.

23.27.1 Software Visible Differences Between the Local APIC and the 82489DX

The following features in the local APIC features differ from those found in the 82489DX external APIC:

- When the local APIC is disabled by clearing the APIC software enable/disable flag in the spurious-interrupt vector MSR, the state of its internal registers are unaffected, except that the mask bits in the LVT are all set to block local interrupts to the processor. Also, the local APIC ceases accepting IPIs except for INIT, SMI, NMI, and start-up IPIs. In the 82489DX, when the local unit is disabled, all the internal registers including the IRR, ISR, and TMR are cleared and the mask bits in the LVT are set. In this state, the 82489DX local unit will accept only the reset deassert message.
- In the local APIC, NMI and INIT (except for INIT deassert) are always treated as edge triggered interrupts, even if programmed otherwise. In the 82489DX, these interrupts are always level triggered.
- In the local APIC, IPIs generated through the ICR are always treated as edge triggered (except INIT Deassert). In the 82489DX, the ICR can be used to generate either edge or level triggered IPIs.
- In the local APIC, the logical destination register supports 8 bits; in the 82489DX, it supports 32 bits.
- In the local APIC, the APIC ID register is 4 bits wide; in the 82489DX, it is 8 bits wide.
- The remote read delivery mode provided in the 82489DX and local APIC for Pentium processors is not supported in the local APIC in the Pentium 4, Intel Xeon, and P6 family processors.
- For the 82489DX, in the lowest priority delivery mode, all the target local APICs specified by the destination field participate in the lowest priority arbitration. For the local APIC, only those local APICs which have free interrupt slots will participate in the lowest priority arbitration.

23.27.2 New Features Incorporated in the Local APIC for the P6 Family and Pentium Processors

The local APIC in the Pentium and P6 family processors have the following new features not found in the 82489DX external APIC.

- Cluster addressing is supported in logical destination mode.
- Focus processor checking can be enabled/disabled.
- Interrupt input signal polarity can be programmed for the LINT0 and LINT1 pins.
- An SMI IPI is supported through the ICR and I/O redirection table.
- An error status register is incorporated into the LVT to log and report APIC errors.

In the P6 family processors, the local APIC incorporates an additional LVT register to handle performance monitoring counter interrupts.

23.27.3 New Features Incorporated in the Local APIC of the Pentium 4 and Intel Xeon Processors

The local APIC in the Pentium 4 and Intel Xeon processors has the following new features not found in the P6 family and Pentium processors and in the 82489DX.

- The local APIC ID is extended to 8 bits.
- An thermal sensor register is incorporated into the LVT to handle thermal sensor interrupts.
- The the ability to deliver lowest-priority interrupts to a focus processor is no longer supported.
- The flat cluster logical destination mode is not supported.

23.28 TASK SWITCHING AND TSS

This section identifies the implementation differences of task switching, additions to the TSS and the handling of TSSs and TSS segment selectors.

23.28.1 P6 Family and Pentium Processor TSS

When the virtual mode extensions are enabled (by setting the VME flag in control register CR4), the TSS in the P6 family and Pentium processors contain an interrupt redirection bit map, which is used in virtual-8086 mode to redirect interrupts back to an 8086 program.

23.28.2 TSS Selector Writes

During task state saves, the Intel486 processor writes 2-byte segment selectors into a 32-bit TSS, leaving the upper 16 bits undefined. For performance reasons, the P6 family and Pentium processors write 4-byte segment selectors into the TSS, with the upper 2 bytes being 0. For compatibility reasons, code should not depend on the value of the upper 16 bits of the selector in the TSS.

23.28.3 Order of Reads/Writes to the TSS

The order of reads and writes into the TSS is processor dependent. The P6 family and Pentium processors may generate different page-fault addresses in control register CR2 in the same TSS area than the Intel486 and Intel386 processors, if a TSS crosses a page boundary (which is not recommended).

23.28.4 Using A 16-Bit TSS with 32-Bit Constructs

Task switches using 16-bit TSSs should be used only for pure 16-bit code. Any new code written using 32-bit constructs (operands, addressing, or the upper word of the EFLAGS register) should use only 32-bit TSSs. This is due to the fact that the 32-bit processors do not save the upper 16 bits of EFLAGS to a 16-bit TSS. A task switch back to a 16-bit task that was executing in virtual mode will never re-enable the virtual mode, as this flag was not saved in the upper half of the EFLAGS value in the TSS. Therefore, it is strongly recommended that any code using 32-bit constructs use a 32-bit TSS to ensure correct behavior in a multitasking environment.

23.28.5 Differences in I/O Map Base Addresses

The Intel486 processor considers the TSS segment to be a 16-bit segment and wraps around the 64K boundary. Any I/O accesses check for permission to access this I/O address at the I/O base address plus the I/O offset. If the I/O map base address exceeds the specified limit of 0DFFFH, an I/O access will wrap around and obtain the permission for the I/O address at an incorrect location within the TSS. A TSS limit violation does not occur in this situation on the Intel486 processor. However, the P6 family and Pentium processors consider the TSS to be a 32-bit segment and a limit violation occurs when the I/O base address plus the I/O offset is greater than the TSS limit. By following the recommended specification for the I/O base address to be less than 0DFFFH, the Intel486 processor will not wrap around and access incorrect locations within the TSS for I/O port validation and the P6 family and Pentium processors will not experience general-protection exceptions (#GP). Figure 23-1 demonstrates the different areas accessed by the Intel486 and the P6 family and Pentium processors.

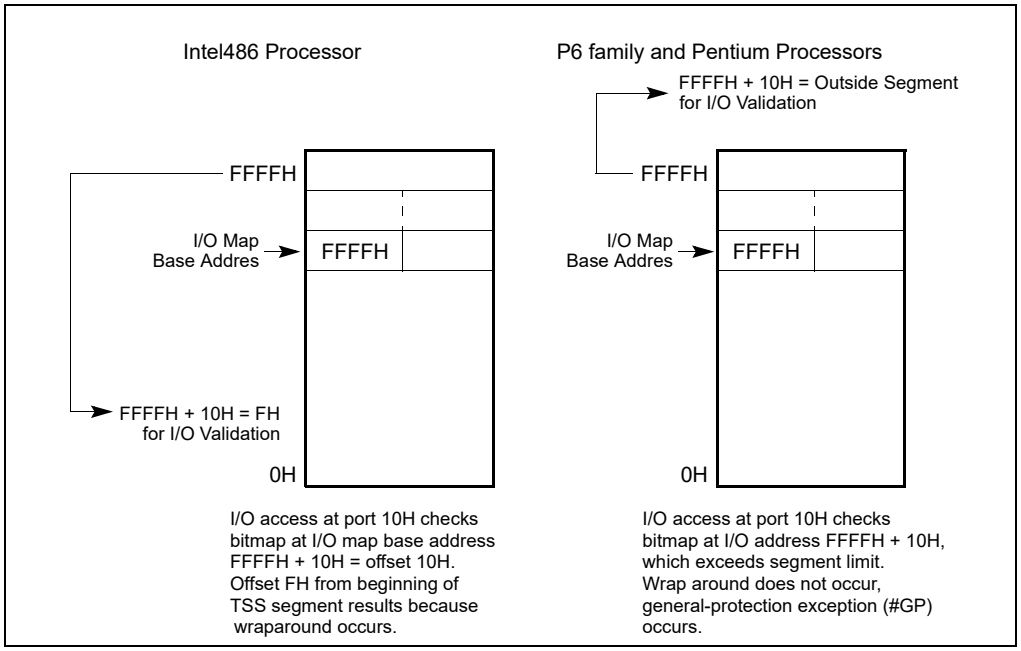

Figure 23-1. I/O Map Base Address Differences

23.29 CACHE MANAGEMENT

The P6 family processors include two levels of internal caches: L1 (level 1) and L2 (level 2). The L1 cache is divided into an instruction cache and a data cache; the L2 cache is a general-purpose cache. See Section 12.1, "Internal Caches, TLBs, and Buffers," for a description of these caches. (Note that although the Pentium II processor L2 cache is physically located on a separate chip in the cassette, it is considered an internal cache.)

The Pentium processor includes separate level 1 instruction and data caches. The data cache supports a writeback (or alternatively write-through, on a line by line basis) policy for memory updates.

The Intel486 processor includes a single level 1 cache for both instructions and data.

The meaning of the CD and NW flags in control register CR0 have been redefined for the P6 family and Pentium processors. For these processors, the recommended value (00B) enables writeback for the data cache of the Pentium processor and for the L1 data cache and L2 cache of the P6 family processors. In the Intel486 processor, setting these flags to (00B) enables write-through for the cache.

External system hardware can force the Pentium processor to disable caching or to use the write-through cache policy should that be required. In the P6 family processors, the MTRRs can be used to override the CD and NW flags (see Table 12-6).

The P6 family and Pentium processors support page-level cache management in the same manner as the Intel486 processor by using the PCD and PWT flags in control register CR3, the page-directory entries, and the page-table entries. The Intel486 processor, however, is not affected by the state of the PWT flag since the internal cache of the Intel486 processor is a write-through cache.

23.29.1 Self-Modifying Code with Cache Enabled

On the Intel486 processor, a write to an instruction in the cache will modify it in both the cache and memory. If the instruction was prefetched before the write, however, the old version of the instruction could be the one executed. To prevent this problem, it is necessary to flush the instruction prefetch unit of the Intel486 processor by coding a jump instruction immediately after any write that modifies an instruction. The P6 family and Pentium processors, however, check whether a write may modify an instruction that has been prefetched for execution. This check is based on the linear address of the instruction. If the linear address of an instruction is found to be present in the

prefetch queue, the P6 family and Pentium processors flush the prefetch queue, eliminating the need to code a jump instruction after any writes that modify an instruction.

Because the linear address of the write is checked against the linear address of the instructions that have been prefetched, special care must be taken for self-modifying code to work correctly when the physical addresses of the instruction and the written data are the same, but the linear addresses differ. In such cases, it is necessary to execute a serializing operation to flush the prefetch queue after the write and before executing the modified instruction. See Section 9.3, "Serializing Instructions," for more information on serializing instructions.

NOTE

The check on linear addresses described above is not in practice a concern for compatibility. Applications that include self-modifying code use the same linear address for modifying and fetching the instruction. System software, such as a debugger, that might possibly modify an instruction using a different linear address than that used to fetch the instruction must execute a serializing operation, such as IRET, before the modified instruction is executed.

23.29.2 Disabling the L3 Cache

A unified third-level (L3) cache in processors based on Intel NetBurst microarchitecture (see Section 12.1, "Internal Caches, TLBs, and Buffers") provides the third-level cache disable flag, bit 6 of the IA32_MISC_ENABLE MSR. The third-level cache disable flag allows the L3 cache to be disabled and enabled, independently of the L1 and L2 caches (see Section 12.5.4, "Disabling and Enabling the L3 Cache"). The third-level cache disable flag applies only to processors based on Intel NetBurst microarchitecture. Processors with L3 and based on other microarchitectures do not support the third-level cache disable flag.

23.30 PAGING

This section identifies enhancements made to the paging mechanism and implementation differences in the paging mechanism for various IA-32 processors.

23.30.1 Large Pages

The Pentium processor extended the memory management/paging facilities of the IA-32 to allow large (4 MBytes) pages sizes (see Section 4.3, "32-Bit Paging"). The first P6 family processor (the Pentium Pro processor) added a 2 MByte page size to the IA-32 in conjunction with the physical address extension (PAE) feature (see Section 4.4, "PAE Paging").

The availability of large pages with 32-bit paging on any IA-32 processor can be determined via feature bit 3 (PSE) of register EDX after the CPUID instruction has been execution with an argument of 1. (Large pages are always available with PAE paging and 4-level paging.) Intel processors that do not support the CPUID instruction support only 32-bit paging and do not support page size enhancements. (See "CPUID—CPU Identification" in Chapter 3, "Instruction Set Reference, A-L," in the *Intel® 64 and IA-32 Architectures Software Developer's Manual, Volume 2A* for more information on the CPUID instruction.)

23.30.2 PCD and PWT Flags

The PCD and PWT flags were introduced to the IA-32 in the Intel486 processor to control the caching of pages:

- PCD (page-level cache disable) flag—Controls caching on a page-by-page basis.
- PWT (page-level write-through) flag—Controls the write-through/writeback caching policy on a page-by-page basis. Since the internal cache of the Intel486 processor is a write-through cache, it is not affected by the state of the PWT flag.

23.30.3 Enabling and Disabling Paging

Paging is enabled and disabled by loading a value into control register CR0 that modifies the PG flag. For backward and forward compatibility with all IA-32 processors, Intel recommends that the following operations be performed when enabling or disabling paging:

1. Execute a MOV CR0, REG instruction to either set (enable paging) or clear (disable paging) the PG flag.
2. Execute a near JMP instruction.

The sequence bounded by the MOV and JMP instructions should be identity mapped (that is, the instructions should reside on a page whose linear and physical addresses are identical).

For the P6 family processors, the MOV CR0, REG instruction is serializing, so the jump operation is not required. However, for backwards compatibility, the JMP instruction should still be included.

23.31 STACK OPERATIONS AND SUPERVISOR SOFTWARE

This section identifies the differences in the stack mechanism for the various IA-32 processors.

23.31.1 Selector Pushes and Pops

When pushing a segment selector onto the stack, the Pentium 4, Intel Xeon, P6 family, and Intel486 processors decrement the ESP register by the operand size and then write 2 bytes. If the operand size is 32-bits, the upper two bytes of the write are not modified. The Pentium processor decrements the ESP register by the operand size and determines the size of the write by the operand size. If the operand size is 32-bits, the upper two bytes are written as 0s.

When popping a segment selector from the stack, the Pentium 4, Intel Xeon, P6 family, and Intel486 processors read 2 bytes and increment the ESP register by the operand size of the instruction. The Pentium processor determines the size of the read from the operand size and increments the ESP register by the operand size.

It is possible to align a 32-bit selector push or pop such that the operation generates an exception on a Pentium processor and not on an Pentium 4, Intel Xeon, P6 family, or Intel486 processor. This could occur if the third and/or fourth byte of the operation lies beyond the limit of the segment or if the third and/or fourth byte of the operation is locate on a non-present or inaccessible page.

For a POP-to-memory instruction that meets the following conditions:

- The stack segment size is 16-bit.
- Any 32-bit addressing form with the SIB byte specifying ESP as the base register.
- The initial stack pointer is FFFCH (32-bit operand) or FFFEH (16-bit operand) and will wrap around to 0H as a result of the POP operation.

The result of the memory write is implementation-specific. For example, in P6 family processors, the result of the memory write is SS:0H plus any scaled index and displacement. In Pentium processors, the result of the memory write may be either a stack fault (real mode or protected mode with stack segment size of 64 KByte), or write to SS:10000H plus any scaled index and displacement (protected mode and stack segment size exceeds 64 KByte).

23.31.2 Error Code Pushes

The Intel486 processor implements the error code pushed on the stack as a 16-bit value. When pushed onto a 32-bit stack, the Intel486 processor only pushes 2 bytes and updates ESP by 4. The P6 family and Pentium processors' error code is a full 32 bits with the upper 16 bits set to zero. The P6 family and Pentium processors, therefore, push 4 bytes and update ESP by 4. Any code that relies on the state of the upper 16 bits may produce inconsistent results.

23.31.3 Fault Handling Effects on the Stack

During the handling of certain instructions, such as CALL and PUSHA, faults may occur in different sequences for the different processors. For example, during far calls, the Intel486 processor pushes the old CS and EIP before a possible branch fault is resolved. A branch fault is a fault from a branch instruction occurring from a segment limit or access rights violation. If a branch fault is taken, the Intel486 and P6 family processors will have corrupted memory below the stack pointer. However, the ESP register is backed up to make the instruction restartable. The P6 family processors issue the branch before the pushes. Therefore, if a branch fault does occur, these processors do not corrupt memory below the stack pointer. This implementation difference, however, does not constitute a compatibility problem, as only values at or above the stack pointer are considered to be valid. Other operations that encounter faults may also corrupt memory below the stack pointer and this behavior may vary on different implementations.

23.31.4 Interlevel RET/IRET From a 16-Bit Interrupt or Call Gate

If a call or interrupt is made from a 32-bit stack environment through a 16-bit gate, only 16 bits of the old ESP can be pushed onto the stack. On the subsequent RET/IRET, the 16-bit ESP is popped but the full 32-bit ESP is updated since control is being resumed in a 32-bit stack environment. The Intel486 processor writes the SS selector into the upper 16 bits of ESP. The P6 family and Pentium processors write zeros into the upper 16 bits.

23.32 MIXING 16- AND 32-BIT SEGMENTS

The features of the 16-bit Intel 286 processor are an object-code compatible subset of those of the 32-bit IA-32 processors. The D (default operation size) flag in segment descriptors indicates whether the processor treats a code or data segment as a 16-bit or 32-bit segment; the B (default stack size) flag in segment descriptors indicates whether the processor treats a stack segment as a 16-bit or 32-bit segment.

The segment descriptors used by the Intel 286 processor are supported by the 32-bit IA-32 processors if the Intel-reserved word (highest word) of the descriptor is clear. On the 32-bit IA-32 processors, this word includes the upper bits of the base address and the segment limit.

The segment descriptors for data segments, code segments, local descriptor tables (there are no descriptors for global descriptor tables), and task gates are the same for the 16- and 32-bit processors. Other 16-bit descriptors (TSS segment, call gate, interrupt gate, and trap gate) are supported by the 32-bit processors.

The 32-bit processors also have descriptors for TSS segments, call gates, interrupt gates, and trap gates that support the 32-bit architecture. Both kinds of descriptors can be used in the same system.

For those segment descriptors common to both 16- and 32-bit processors, clear bits in the reserved word cause the 32-bit processors to interpret these descriptors exactly as an Intel 286 processor does, that is:

- Base Address — The upper 8 bits of the 32-bit base address are clear, which limits base addresses to 24 bits.
- Limit — The upper 4 bits of the limit field are clear, restricting the value of the limit field to 64 KBytes.
- Granularity bit — The G (granularity) flag is clear, indicating the value of the 16-bit limit is interpreted in units of 1 byte.
- Big bit — In a data-segment descriptor, the B flag is clear in the segment descriptor used by the 32-bit processors, indicating the segment is no larger than 64 KBytes.
- Default bit — In a code-segment descriptor, the D flag is clear, indicating 16-bit addressing and operands are the default. In a stack-segment descriptor, the D flag is clear, indicating use of the SP register (instead of the ESP register) and a 64-KByte maximum segment limit.

For information on mixing 16- and 32-bit code in applications, see Chapter 22, “Mixing 16-Bit and 32-Bit Code.”

23.33 SEGMENT AND ADDRESS WRAPAROUND

This section discusses differences in segment and address wraparound between the P6 family, Pentium, Intel486, Intel386, Intel 286, and 8086 processors.

23.33.1 Segment Wraparound

On the 8086 processor, an attempt to access a memory operand that crosses offset 65,535 or 0FFFFH or offset 0 (for example, moving a word to offset 65,535 or pushing a word when the stack pointer is set to 1) causes the offset to wrap around modulo 65,536 or 010000H. With the Intel 286 processor, any base and offset combination that addresses beyond 16 MBytes wraps around to the 1 MByte of the address space. The P6 family, Pentium, Intel486, and Intel386 processors in real-address mode generate an exception in these cases:

- A general-protection exception (#GP) if the segment is a data segment (that is, if the CS, DS, ES, FS, or GS register is being used to address the segment).
- A stack-fault exception (#SS) if the segment is a stack segment (that is, if the SS register is being used).

An exception to this behavior occurs when a stack access is data aligned, and the stack pointer is pointing to the last aligned piece of data that size at the top of the stack (ESP is FFFFFFFCH). When this data is popped, no segment limit violation occurs and the stack pointer will wrap around to 0.

The address space of the P6 family, Pentium, and Intel486 processors may wraparound at 1 MByte in real-address mode. An external A20M# pin forces wraparound if enabled. On Intel 8086 processors, it is possible to specify addresses greater than 1 MByte. For example, with a selector value FFFFH and an offset of FFFFH, the effective address would be 10FFEFH (1 MByte plus 65519 bytes). The 8086 processor, which can form addresses up to 20 bits long, truncates the uppermost bit, which "wraps" this address to FFEFH. However, the P6 family, Pentium, and Intel486 processors do not truncate this bit if A20M# is not enabled.

If a stack operation wraps around the address limit, shutdown occurs. (The 8086 processor does not have a shut-down mode or a limit.)

The behavior when executing near the limit of a 4-GByte selector (limit = FFFFFFFFH) is different between the Pentium Pro and the Pentium 4 family of processors. On the Pentium Pro, instructions which cross the limit -- for example, a two byte instruction such as INC EAX that is encoded as FFH C0H starting exactly at the limit faults for a segment violation (a one byte instruction at FFFFFFFFH does not cause an exception). Using the Pentium 4 micro-processor family, neither of these situations causes a fault.

Segment wraparound and the functionality of A20M# is used primarily by older operating systems and not used by modern operating systems. On newer Intel 64 processors, A20M# may be absent.

23.34 STORE BUFFERS AND MEMORY ORDERING

The Pentium 4, Intel Xeon, and P6 family processors provide a store buffer for temporary storage of writes (stores) to memory (see Section 12.10, "Store Buffer"). Writes stored in the store buffer(s) are always written to memory in program order, with the exception of "fast string" store operations (see Section 9.2.4, "Fast-String Operation and Out-of-Order Stores").

The Pentium processor has two store buffers, one corresponding to each of the pipelines. Writes in these buffers are always written to memory in the order they were generated by the processor core.

It should be noted that only memory writes are buffered and I/O writes are not. The Pentium 4, Intel Xeon, P6 family, Pentium, and Intel486 processors do not synchronize the completion of memory writes on the bus and instruction execution after a write. An I/O, locked, or serializing instruction needs to be executed to synchronize writes with the next instruction (see Section 9.3, "Serializing Instructions").

The Pentium 4, Intel Xeon, and P6 family processors use processor ordering to maintain consistency in the order that data is read (loaded) and written (stored) in a program and the order the processor actually carries out the reads and writes. With this type of ordering, reads can be carried out speculatively and in any order, reads can pass buffered writes, and writes to memory are always carried out in program order. (See Section 9.2, "Memory Ordering," for more information about processor ordering.) The Pentium III processor introduced a new instruction to serialize writes and make them globally visible. Memory ordering issues can arise between a producer and a consumer of data. The SFENCE instruction provides a performance-efficient way of ensuring ordering between routines that produce weakly-ordered results and routines that consume this data.

No re-ordering of reads occurs on the Pentium processor, except under the condition noted in Section 9.2.1, "Memory Ordering in the Intel® Pentium® and Intel486™ Processors," and in the following paragraph describing the Intel486 processor.

Specifically, the store buffers are flushed before the IN instruction is executed. No reads (as a result of cache miss) are reordered around previously generated writes sitting in the store buffers. The implication of this is that the store buffers will be flushed or emptied before a subsequent bus cycle is run on the external bus.

On both the Intel486 and Pentium processors, under certain conditions, a memory read will go onto the external bus before the pending memory writes in the buffer even though the writes occurred earlier in the program execution. A memory read will only be reordered in front of all writes pending in the buffers if all writes pending in the buffers are cache hits and the read is a cache miss. Under these conditions, the Intel486 and Pentium processors will not read from an external memory location that needs to be updated by one of the pending writes.

During a locked bus cycle, the Intel486 processor will always access external memory, it will never look for the location in the on-chip cache. All data pending in the Intel486 processor's store buffers will be written to memory before a locked cycle is allowed to proceed to the external bus. Thus, the locked bus cycle can be used for eliminating the possibility of reordering read cycles on the Intel486 processor. The Pentium processor does check its cache on a read-modify-write access and, if the cache line has been modified, writes the contents back to memory before locking the bus. The P6 family processors write to their cache on a read-modify-write operation (if the access does not split across a cache line) and does not write back to system memory. If the access does split across a cache line, it locks the bus and accesses system memory.

I/O reads are never reordered in front of buffered memory writes on an IA-32 processor. This ensures an update of all memory locations before reading the status from an I/O device.

23.35 BUS LOCKING

The Intel 286 processor performs the bus locking differently than the Intel P6 family, Pentium, Intel486, and Intel386 processors. Programs that use forms of memory locking specific to the Intel 286 processor may not run properly when run on later processors.

A locked instruction is guaranteed to lock only the area of memory defined by the destination operand, but may lock a larger memory area. For example, typical 8086 and Intel 286 configurations lock the entire physical memory space. Programmers should not depend on this.

On the Intel 286 processor, the LOCK prefix is sensitive to IOPL. If the CPL is greater than the IOPL, a general-protection exception (#GP) is generated. On the Intel386 DX, Intel486, and Pentium, and P6 family processors, no check against IOPL is performed.

The Pentium processor automatically asserts the LOCK# signal when acknowledging external interrupts. After signaling an interrupt request, an external interrupt controller may use the data bus to send the interrupt vector to the processor. After receiving the interrupt request signal, the processor asserts LOCK# to ensure that no other data appears on the data bus until the interrupt vector is received. This bus locking does not occur on the P6 family processors.

23.36 BUS HOLD

Unlike the 8086 and Intel 286 processors, but like the Intel386 and Intel486 processors, the P6 family and Pentium processors respond to requests for control of the bus from other potential bus masters, such as DMA controllers, between transfers of parts of an unaligned operand, such as two words which form a doubleword. Unlike the Intel386 processor, the P6 family, Pentium, and Intel486 processors respond to bus hold during reset initialization.

23.37 MODEL-SPECIFIC EXTENSIONS TO THE IA-32

Certain extensions to the IA-32 are specific to a processor or family of IA-32 processors and may not be implemented or implemented in the same way in future processors. The following sections describe these model-specific extensions. The CPUID instruction indicates the availability of some of the model-specific features.

23.37.1 Model-Specific Registers

The Pentium processor introduced a set of model-specific registers (MSRs) for use in controlling hardware functions and performance monitoring. To access these MSRs, two new instructions were added to the IA-32 architecture: read MSR (RDMSR) and write MSR (WRMSR). The MSRs in the Pentium processor are not guaranteed to be duplicated or provided in the next generation IA-32 processors.

The P6 family processors greatly increased the number of MSRs available to software. See Chapter 2, "Model-Specific Registers (MSRs)" in the *Intel® 64 and IA-32 Architectures Software Developer's Manual, Volume 4* for a complete list of the available MSRs. The new registers control the debug extensions, the performance counters, the machine-check exception capability, the machine-check architecture, and the MTRRs. These registers are accessible using the RDMSR and WRMSR instructions. Specific information on some of these new MSRs is provided in the following sections. As with the Pentium processor MSR, the P6 family processor MSRs are not guaranteed to be duplicated or provided in the next generation IA-32 processors.

23.37.2 RDMSR and WRMSR Instructions

The RDMSR (read model-specific register) and WRMSR (write model-specific register) instructions recognize a much larger number of model-specific registers in the P6 family processors. (See "RDMSR—Read from Model Specific Register" and "WRMSR—Write to Model Specific Register" in the *Intel® 64 and IA-32 Architectures Software Developer's Manual, Volumes 2A, 2B, 2C & 2D* for more information.)

23.37.3 Memory Type Range Registers

Memory type range registers (MTRRs) are a new feature introduced into the IA-32 in the Pentium Pro processor. MTRRs allow the processor to optimize memory operations for different types of memory, such as RAM, ROM, frame buffer memory, and memory-mapped I/O.

MTRRs are MSRs that contain an internal map of how physical address ranges are mapped to various types of memory. The processor uses this internal memory map to determine the cacheability of various physical memory locations and the optimal method of accessing memory locations. For example, if a memory location is specified in an MTRR as write-through memory, the processor handles accesses to this location as follows. It reads data from that location in lines and caches the read data or maps all writes to that location to the bus and updates the cache to maintain cache coherency. In mapping the physical address space with MTRRs, the processor recognizes five types of memory: uncacheable (UC), uncacheable, speculatable, write-combining (WC), write-through (WT), write-protected (WP), and writeback (WB).

Earlier IA-32 processors (such as the Intel486 and Pentium processors) used the KEN# (cache enable) pin and external logic to maintain an external memory map and signal cacheable accesses to the processor. The MTRR mechanism simplifies hardware designs by eliminating the KEN# pin and the external logic required to drive it.

See Chapter 10, "Processor Management and Initialization," and Chapter 2, "Model-Specific Registers (MSRs)" in the *Intel® 64 and IA-32 Architectures Software Developer's Manual, Volume 4* for more information on the MTRRs.

23.37.4 Machine-Check Exception and Architecture

The Pentium processor introduced a new exception called the machine-check exception (#MC, interrupt 18). This exception is used to detect hardware-related errors, such as a parity error on a read cycle.

The P6 family processors extend the types of errors that can be detected and that generate a machine-check exception. It also provides a new machine-check architecture for recording information about a machine-check error and provides extended recovery capability.

The machine-check architecture provides several banks of reporting registers for recording machine-check errors. Each bank of registers is associated with a specific hardware unit in the processor. The primary focus of the machine checks is on bus and interconnect operations; however, checks are also made of translation lookaside buffer (TLB) and cache operations.

The machine-check architecture can correct some errors automatically and allow for reliable restart of instruction execution. It also collects sufficient information for software to use in correcting other machine errors not corrected by hardware.

See Chapter 16, "Machine-Check Architecture," for more information on the machine-check exception and the machine-check architecture.

23.37.5 Performance-Monitoring Counters

The P6 family and Pentium processors provide two performance-monitoring counters for use in monitoring internal hardware operations. The number of performance monitoring counters and associated programming interfaces may be implementation specific for Pentium 4 processors, Pentium M processors. Later processors may have implemented these as part of an architectural performance monitoring feature. The architectural and non-architectural performance monitoring interfaces for different processor families are described in Chapter 20, "Performance Monitoring,". https://perfmon-events.intel.com/ lists all the events that can be counted for architectural performance monitoring events and non-architectural events. The counters are set up, started, and stopped using two MSRs and the RDMSR and WRMSR instructions. For the P6 family processors, the current count for a particular counter can be read using the new RDPMC instruction.

The performance-monitoring counters are useful for debugging programs, optimizing code, diagnosing system failures, or refining hardware designs. See Chapter 20, "Performance Monitoring," for more information on these counters.

23.38 TWO WAYS TO RUN INTEL 286 PROCESSOR TASKS

When porting 16-bit programs to run on 32-bit IA-32 processors, there are two approaches to consider:

- Porting an entire 16-bit software system to a 32-bit processor, complete with the old operating system, loader, and system builder. Here, all tasks will have 16-bit TSSs. The 32-bit processor is being used as if it were a faster version of the 16-bit processor.
- Porting selected 16-bit applications to run in a 32-bit processor environment with a 32-bit operating system, loader, and system builder. Here, the TSSs used to represent 286 tasks should be changed to 32-bit TSSs. It is possible to mix 16 and 32-bit TSSs, but the benefits are small and the problems are great. All tasks in a 32-bit software system should have 32-bit TSSs. It is not necessary to change the 16-bit object modules themselves; TSSs are usually constructed by the operating system, by the loader, or by the system builder. See Chapter 22, "Mixing 16-Bit and 32-Bit Code," for more detailed information about mixing 16-bit and 32-bit code.

Because the 32-bit processors use the contents of the reserved word of 16-bit segment descriptors, 16-bit programs that place values in this word may not run correctly on the 32-bit processors.

23.39 INITIAL STATE OF PENTIUM, PENTIUM PRO AND PENTIUM 4 PROCESSORS

Table 23-10 shows the state of the flags and other registers following power-up for the Pentium, Pentium Pro and Pentium 4 processors. The state of control register CR0 is 60000010H (see Figure 10-1 "Contents of CR0 Register after Reset" in the *Intel® 64 and IA-32 Architectures Software Developer's Manual, Volume 3A*). This places the processor in real-address mode with paging disabled.

Table 23-10. Processor State Following Power-up/Reset/INIT for Pentium, Pentium Pro and Pentium 4 Processors

Register	Pentium 4 Processor	Pentium Pro Processor	Pentium Processor
EFLAGS[1]	00000002H	00000002H	00000002H
EIP	0000FFF0H	0000FFF0H	0000FFF0H
CR0	60000010H[2]	60000010H[2]	60000010H[2]
CR2, CR3, CR4	00000000H	00000000H	00000000H

Table 23-10. Processor State Following Power-up/Reset/INIT for Pentium, Pentium Pro and Pentium 4 Processors

Register	Pentium 4 Processor	Pentium Pro Processor	Pentium Processor
CS	Selector = F000H Base = FFFF0000H Limit = FFFFH AR = Present, R/W, Accessed	Selector = F000H Base = FFFF0000H Limit = FFFFH AR = Present, R/W, Accessed	Selector = F000H Base = FFFF0000H Limit = FFFFH AR = Present, R/W, Accessed
SS, DS, ES, FS, GS	Selector = 0000H Base = 00000000H Limit = FFFFH AR = Present, R/W, Accessed	Selector = 0000H Base = 00000000H Limit = FFFFH AR = Present, R/W, Accessed	Selector = 0000H Base = 00000000H Limit = FFFFH AR = Present, R/W, Accessed
EDX	00000FxxH	000n06xxH[3]	000005xxH
EAX	0[4]	0[4]	0[4]
EBX, ECX, ESI, EDI, EBP, ESP	00000000H	00000000H	00000000H
ST0 through ST7[5]	Pwr up or Reset: +0.0 FINIT/FNINIT: Unchanged	Pwr up or Reset: +0.0 FINIT/FNINIT: Unchanged	Pwr up or Reset: +0.0 FINIT/FNINIT: Unchanged
x87 FPU Control Word[5]	Pwr up or Reset: 0040H FINIT/FNINIT: 037FH	Pwr up or Reset: 0040H FINIT/FNINIT: 037FH	Pwr up or Reset: 0040H FINIT/FNINIT: 037FH
x87 FPU Status Word[5]	Pwr up or Reset: 0000H FINIT/FNINIT: 0000H	Pwr up or Reset: 0000H FINIT/FNINIT: 0000H	Pwr up or Reset: 0000H FINIT/FNINIT: 0000H
x87 FPU Tag Word[5]	Pwr up or Reset: 5555H FINIT/FNINIT: FFFFH	Pwr up or Reset: 5555H FINIT/FNINIT: FFFFH	Pwr up or Reset: 5555H FINIT/FNINIT: FFFFH
x87 FPU Data Operand and CS Seg. Selectors[5]	Pwr up or Reset: 0000H FINIT/FNINIT: 0000H	Pwr up or Reset: 0000H FINIT/FNINIT: 0000H	Pwr up or Reset: 0000H FINIT/FNINIT: 0000H
x87 FPU Data Operand and Inst. Pointers[5]	Pwr up or Reset: 00000000H FINIT/FNINIT: 00000000H	Pwr up or Reset: 00000000H FINIT/FNINIT: 00000000H	Pwr up or Reset: 00000000H FINIT/FNINIT: 00000000H
MM0 through MM7[5]	Pwr up or Reset: 0000000000000000H INIT or FINIT/FNINIT: Unchanged	Pentium II and Pentium III Processors Only— Pwr up or Reset: 0000000000000000H INIT or FINIT/FNINIT: Unchanged	Pentium with MMX Technology Only— Pwr up or Reset: 0000000000000000H INIT or FINIT/FNINIT: Unchanged
XMM0 through XMM7	Pwr up or Reset: 0H INIT: Unchanged	If CPUID.01H:SSE is 1 — Pwr up or Reset: 0H INIT: Unchanged	NA
MXCSR	Pwr up or Reset: 1F80H INIT: Unchanged	Pentium III processor only- Pwr up or Reset: 1F80H INIT: Unchanged	NA
GDTR, IDTR	Base = 00000000H Limit = FFFFH AR = Present, R/W	Base = 00000000H Limit = FFFFH AR = Present, R/W	Base = 00000000H Limit = FFFFH AR = Present, R/W
LDTR, Task Register	Selector = 0000H Base = 00000000H Limit = FFFFH AR = Present, R/W	Selector = 0000H Base = 00000000H Limit = FFFFH AR = Present, R/W	Selector = 0000H Base = 00000000H Limit = FFFFH AR = Present, R/W
DR0, DR1, DR2, DR3	00000000H	00000000H	00000000H
DR6	FFFF0FF0H	FFFF0FF0H	FFFF0FF0H

Table 23-10. Processor State Following Power-up/Reset/INIT for Pentium, Pentium Pro and Pentium 4 Processors

Register	Pentium 4 Processor	Pentium Pro Processor	Pentium Processor
DR7	00000400H	00000400H	00000400H
Time-Stamp Counter	Power up or Reset: 0H INIT: Unchanged	Power up or Reset: 0H INIT: Unchanged	Power up or Reset: 0H INIT: Unchanged
Perf. Counters and Event Select	Power up or Reset: 0H INIT: Unchanged	Power up or Reset: 0H INIT: Unchanged	Power up or Reset: 0H INIT: Unchanged
All Other MSRs	Pwr up or Reset: Undefined INIT: Unchanged	Pwr up or Reset: Undefined INIT: Unchanged	Pwr up or Reset: Undefined INIT: Unchanged
Data and Code Cache, TLBs	Invalid[6]	Invalid[6]	Invalid[6]
Fixed MTRRs	Pwr up or Reset: Disabled INIT: Unchanged	Pwr up or Reset: Disabled INIT: Unchanged	Not Implemented
Variable MTRRs	Pwr up or Reset: Disabled INIT: Unchanged	Pwr up or Reset: Disabled INIT: Unchanged	Not Implemented
Machine-Check Architecture	Pwr up or Reset: Undefined INIT: Unchanged	Pwr up or Reset: Undefined INIT: Unchanged	Not Implemented
APIC	Pwr up or Reset: Enabled INIT: Unchanged	Pwr up or Reset: Enabled INIT: Unchanged	Pwr up or Reset: Enabled INIT: Unchanged
R8-R15[7]	0000000000000000H	0000000000000000H	N.A.
XMM8-XMM15[7]	Pwr up or Reset: 0H INIT: Unchanged	Pwr up or Reset: 0H INIT: Unchanged	N.A.

NOTES:

1. The 10 most-significant bits of the EFLAGS register are undefined following a reset. Software should not depend on the states of any of these bits.
2. The CD and NW flags are unchanged, bit 4 is set to 1, all other bits are cleared.
3. Where "n" is the Extended Model Value for the respective processor.
4. If Built-In Self-Test (BIST) is invoked on power up or reset, EAX is 0 only if all tests passed. (BIST cannot be invoked during an INIT.)
5. The state of the x87 FPU and MMX registers is not changed by the execution of an INIT.
6. Internal caches are invalid after power-up and RESET, but left unchanged with an INIT.
7. If the processor supports IA-32e mode.

CHAPTER 24
INTRODUCTION TO VIRTUAL MACHINE EXTENSIONS

24.1 OVERVIEW

This chapter describes the basics of virtual machine architecture and an overview of the virtual-machine extensions (VMX) that support virtualization of processor hardware for multiple software environments.

Information about VMX instructions is provided in *Intel® 64 and IA-32 Architectures Software Developer's Manual, Volume 2B*. Other aspects of VMX and system programming considerations are described in chapters of *Intel® 64 and IA-32 Architectures Software Developer's Manual, Volume 3B*.

24.2 VIRTUAL MACHINE ARCHITECTURE

Virtual-machine extensions define processor-level support for virtual machines on IA-32 processors. Two principal classes of software are supported:

- **Virtual-machine monitors (VMM) —** A VMM acts as a host and has full control of the processor(s) and other platform hardware. A VMM presents guest software (see next paragraph) with an abstraction of a virtual processor and allows it to execute directly on a logical processor. A VMM is able to retain selective control of processor resources, physical memory, interrupt management, and I/O.
- **Guest software —** Each virtual machine (VM) is a guest software environment that supports a stack consisting of operating system (OS) and application software. Each operates independently of other virtual machines and uses on the same interface to processor(s), memory, storage, graphics, and I/O provided by a physical platform. The software stack acts as if it were running on a platform with no VMM. Software executing in a virtual machine must operate with reduced privilege so that the VMM can retain control of platform resources.

24.3 INTRODUCTION TO VMX OPERATION

Processor support for virtualization is provided by a form of processor operation called VMX operation. There are two kinds of VMX operation: VMX root operation and VMX non-root operation. In general, a VMM will run in VMX root operation and guest software will run in VMX non-root operation. Transitions between VMX root operation and VMX non-root operation are called VMX transitions. There are two kinds of VMX transitions. Transitions into VMX non-root operation are called VM entries. Transitions from VMX non-root operation to VMX root operation are called VM exits.

Processor behavior in VMX root operation is very much as it is outside VMX operation. The principal differences are that a set of new instructions (the VMX instructions) is available and that the values that can be loaded into certain control registers are limited (see Section 24.8).

Processor behavior in VMX non-root operation is restricted and modified to facilitate virtualization. Instead of their ordinary operation, certain instructions (including the new VMCALL instruction) and events cause VM exits to the VMM. Because these VM exits replace ordinary behavior, the functionality of software in VMX non-root operation is limited. It is this limitation that allows the VMM to retain control of processor resources.

There is no software-visible bit whose setting indicates whether a logical processor is in VMX non-root operation. This fact may allow a VMM to prevent guest software from determining that it is running in a virtual machine.

Because VMX operation places restrictions even on software running with current privilege level (CPL) 0, guest software can run at the privilege level for which it was originally designed. This capability may simplify the development of a VMM.

24.4 LIFE CYCLE OF VMM SOFTWARE

Figure 24-1 illustrates the life cycle of a VMM and its guest software as well as the interactions between them. The following items summarize that life cycle:

- Software enters VMX operation by executing a VMXON instruction.
- Using VM entries, a VMM can then enter guests into virtual machines (one at a time). The VMM effects a VM entry using instructions VMLAUNCH and VMRESUME; it regains control using VM exits.
- VM exits transfer control to an entry point specified by the VMM. The VMM can take action appropriate to the cause of the VM exit and can then return to the virtual machine using a VM entry.
- Eventually, the VMM may decide to shut itself down and leave VMX operation. It does so by executing the VMXOFF instruction.

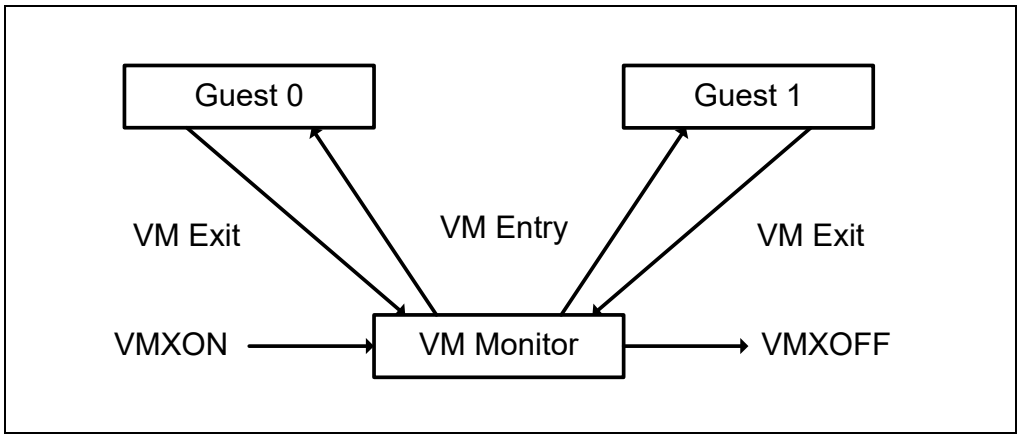

Figure 24-1. Interaction of a Virtual-Machine Monitor and Guests

24.5 VIRTUAL-MACHINE CONTROL STRUCTURE

VMX non-root operation and VMX transitions are controlled by a data structure called a virtual-machine control structure (VMCS).

Access to the VMCS is managed through a component of processor state called the VMCS pointer (one per logical processor). The value of the VMCS pointer is the 64-bit address of the VMCS. The VMCS pointer is read and written using the instructions VMPTRST and VMPTRLD. The VMM configures a VMCS using the VMREAD, VMWRITE, and VMCLEAR instructions.

A VMM could use a different VMCS for each virtual machine that it supports. For a virtual machine with multiple logical processors (virtual processors), the VMM could use a different VMCS for each virtual processor.

24.6 DISCOVERING SUPPORT FOR VMX

Before system software enters into VMX operation, it must discover the presence of VMX support in the processor. System software can determine whether a processor supports VMX operation using CPUID. If CPUID.1:ECX.VMX[bit 5] = 1, then VMX operation is supported. See Chapter 3, "Instruction Set Reference, A-L" of *Intel® 64 and IA-32 Architectures Software Developer's Manual, Volume 2A*.

The VMX architecture is designed to be extensible so that future processors in VMX operation can support additional features not present in first-generation implementations of the VMX architecture. The availability of extensible VMX features is reported to software using a set of VMX capability MSRs (see Appendix A, "VMX Capability Reporting Facility").

24.7 ENABLING AND ENTERING VMX OPERATION

Before system software can enter VMX operation, it enables VMX by setting CR4.VMXE[bit 13] = 1. VMX operation is then entered by executing the VMXON instruction. VMXON causes an invalid-opcode exception (#UD) if executed with CR4.VMXE = 0. Once in VMX operation, it is not possible to clear CR4.VMXE (see Section 24.8). System software leaves VMX operation by executing the VMXOFF instruction. CR4.VMXE can be cleared outside of VMX operation after executing of VMXOFF.

VMXON is also controlled by the IA32_FEATURE_CONTROL MSR (MSR address 3AH). This MSR is cleared to zero when a logical processor is reset. The relevant bits of the MSR are:

- **Bit 0 is the lock bit.** If this bit is clear, VMXON causes a general-protection exception. If the lock bit is set, WRMSR to this MSR causes a general-protection exception; the MSR cannot be modified until a power-up reset condition. System BIOS can use this bit to provide a setup option for BIOS to disable support for VMX. To enable VMX support in a platform, BIOS must set bit 1, bit 2, or both (see below), as well as the lock bit.
- **Bit 1 enables VMXON in SMX operation.** If this bit is clear, execution of VMXON in SMX operation causes a general-protection exception. Attempts to set this bit on logical processors that do not support both VMX operation (see Section 24.6) and SMX operation (see Chapter 7, "Safer Mode Extensions Reference," in *Intel® 64 and IA-32 Architectures Software Developer's Manual, Volume 2D*) cause general-protection exceptions.
- **Bit 2 enables VMXON outside SMX operation.** If this bit is clear, execution of VMXON outside SMX operation causes a general-protection exception. Attempts to set this bit on logical processors that do not support VMX operation (see Section 24.6) cause general-protection exceptions.

NOTE

A logical processor is in SMX operation if GETSEC[SEXIT] has not been executed since the last execution of GETSEC[SENTER]. A logical processor is outside SMX operation if GETSEC[SENTER] has not been executed or if GETSEC[SEXIT] was executed after the last execution of GETSEC[SENTER]. See Chapter 7, "Safer Mode Extensions Reference," in *Intel® 64 and IA-32 Architectures Software Developer's Manual, Volume 2D*.

Before executing VMXON, software should allocate a naturally aligned 4-KByte region of memory that a logical processor may use to support VMX operation.[1] This region is called the **VMXON region**. The address of the VMXON region (the VMXON pointer) is provided in an operand to VMXON. Section 25.11.5, "VMXON Region," details how software should initialize and access the VMXON region.

24.8 RESTRICTIONS ON VMX OPERATION

VMX operation places restrictions on processor operation. These are detailed below:

- In VMX operation, processors may fix certain bits in CR0 and CR4 to specific values and not support other values. VMXON fails if any of these bits contains an unsupported value (see "VMXON—Enter VMX Operation" in Chapter 31). Any attempt to set one of these bits to an unsupported value while in VMX operation (including VMX root operation) using any of the CLTS, LMSW, or MOV CR instructions causes a general-protection exception. VM entry or VM exit cannot set any of these bits to an unsupported value. Software should consult the VMX capability MSRs IA32_VMX_CR0_FIXED0 and IA32_VMX_CR0_FIXED1 to determine how bits in CR0 are fixed (see Appendix A.7). For CR4, software should consult the VMX capability MSRs IA32_VMX_CR4_FIXED0 and IA32_VMX_CR4_FIXED1 (see Appendix A.8).

NOTES

The first processors to support VMX operation require that the following bits be 1 in VMX operation: CR0.PE, CR0.NE, CR0.PG, and CR4.VMXE. The restrictions on CR0.PE and CR0.PG imply that VMX

1. Future processors may require that a different amount of memory be reserved. If so, this fact is reported to software using the VMX capability-reporting mechanism.

operation is supported only in paged protected mode (including IA-32e mode). Therefore, guest software cannot be run in unpaged protected mode or in real-address mode.

Later processors support a VM-execution control called "unrestricted guest" (see Section 25.6.2). If this control is 1, CR0.PE and CR0.PG may be 0 in VMX non-root operation (even if the capability MSR IA32_VMX_CR0_FIXED0 reports otherwise).[1] Such processors allow guest software to run in unpaged protected mode or in real-address mode.

- VMXON fails if a logical processor is in A20M mode (see "VMXON—Enter VMX Operation" in Chapter 31). Once the processor is in VMX operation, A20M interrupts are blocked. Thus, it is impossible to be in A20M mode in VMX operation.
- The INIT signal is blocked whenever a logical processor is in VMX root operation. It is not blocked in VMX non-root operation. Instead, INITs cause VM exits (see Section 26.2, "Other Causes of VM Exits").
- Intel® Processor Trace (Intel PT) can be used in VMX operation only if IA32_VMX_MISC[14] is read as 1 (see Appendix A.6). On processors that support Intel PT but which do not allow it to be used in VMX operation, execution of VMXON clears IA32_RTIT_CTL.TraceEn (see "VMXON—Enter VMX Operation" in Chapter 31); any attempt to write IA32_RTIT_CTL while in VMX operation (including VMX root operation) causes a general-protection exception.

1. "Unrestricted guest" is a secondary processor-based VM-execution control. If bit 31 of the primary processor-based VM-execution controls is 0, VMX non-root operation functions as if the "unrestricted guest" VM-execution control were 0. See Section 25.6.2.

CHAPTER 25
VIRTUAL MACHINE CONTROL STRUCTURES

25.1 OVERVIEW

A logical processor uses **virtual-machine control data structures** (**VMCSs**) while it is in VMX operation. These manage transitions into and out of VMX non-root operation (VM entries and VM exits) as well as processor behavior in VMX non-root operation. This structure is manipulated by the new instructions VMCLEAR, VMPTRLD, VMREAD, and VMWRITE.

A VMM can use a different VMCS for each virtual machine that it supports. For a virtual machine with multiple logical processors (virtual processors), the VMM can use a different VMCS for each virtual processor.

A logical processor associates a region in memory with each VMCS. This region is called the **VMCS region**.[1] Software references a specific VMCS using the 64-bit physical address of the region (a **VMCS pointer**). VMCS pointers must be aligned on a 4-KByte boundary (bits 11:0 must be zero). These pointers must not set bits beyond the processor's physical-address width.[2,3]

A logical processor may maintain a number of VMCSs that are **active**. The processor may optimize VMX operation by maintaining the state of an active VMCS in memory, on the processor, or both. At any given time, at most one of the active VMCSs is the **current** VMCS. (This document frequently uses the term "the VMCS" to refer to the current VMCS.) The VMLAUNCH, VMREAD, VMRESUME, and VMWRITE instructions operate only on the current VMCS.

The following items describe how a logical processor determines which VMCSs are active and which is current:

- The memory operand of the VMPTRLD instruction is the address of a VMCS. After execution of the instruction, that VMCS is both active and current on the logical processor. Any other VMCS that had been active remains so, but no other VMCS is current.
- The VMCS link pointer field in the current VMCS (see Section 25.4.2) is itself the address of a VMCS. If VM entry is performed successfully with the 1-setting of the "VMCS shadowing" VM-execution control, the VMCS referenced by the VMCS link pointer field becomes active on the logical processor. The identity of the current VMCS does not change.
- The memory operand of the VMCLEAR instruction is also the address of a VMCS. After execution of the instruction, that VMCS is neither active nor current on the logical processor. If the VMCS had been current on the logical processor, the logical processor no longer has a current VMCS.

The VMPTRST instruction stores the address of the logical processor's current VMCS into a specified memory location (it stores the value FFFFFFFF_FFFFFFFFH if there is no current VMCS).

The **launch state** of a VMCS determines which VM-entry instruction should be used with that VMCS: the VMLAUNCH instruction requires a VMCS whose launch state is "clear"; the VMRESUME instruction requires a VMCS whose launch state is "launched". A logical processor maintains a VMCS's launch state in the corresponding VMCS region. The following items describe how a logical processor manages the launch state of a VMCS:

- If the launch state of the current VMCS is "clear", successful execution of the VMLAUNCH instruction changes the launch state to "launched".
- The memory operand of the VMCLEAR instruction is the address of a VMCS. After execution of the instruction, the launch state of that VMCS is "clear".
- There are no other ways to modify the launch state of a VMCS (it cannot be modified using VMWRITE) and there is no direct way to discover it (it cannot be read using VMREAD).

---

1. The amount of memory required for a VMCS region is at most 4 KBytes. The exact size is implementation specific and can be determined by consulting the VMX capability MSR IA32_VMX_BASIC to determine the size of the VMCS region (see Appendix A.1).
2. Software can determine a processor's physical-address width by executing CPUID with 80000008H in EAX. The physical-address width is returned in bits 7:0 of EAX.
3. If IA32_VMX_BASIC[48] is read as 1, these pointers must not set any bits in the range 63:32; see Appendix A.1.

Figure 25-1 illustrates the different states of a VMCS. It uses "X" to refer to the VMCS and "Y" to refer to any other VMCS. Thus: "VMPTRLD X" always makes X current and active; "VMPTRLD Y" always makes X not current (because it makes Y current); VMLAUNCH makes the launch state of X "launched" if X was current and its launch state was "clear"; and VMCLEAR X always makes X inactive and not current and makes its launch state "clear".

The figure does not illustrate operations that do not modify the VMCS state relative to these parameters (e.g., execution of VMPTRLD X when X is already current). Note that VMCLEAR X makes X "inactive, not current, and clear," even if X's current state is not defined (e.g., even if X has not yet been initialized). See Section 25.11.3.

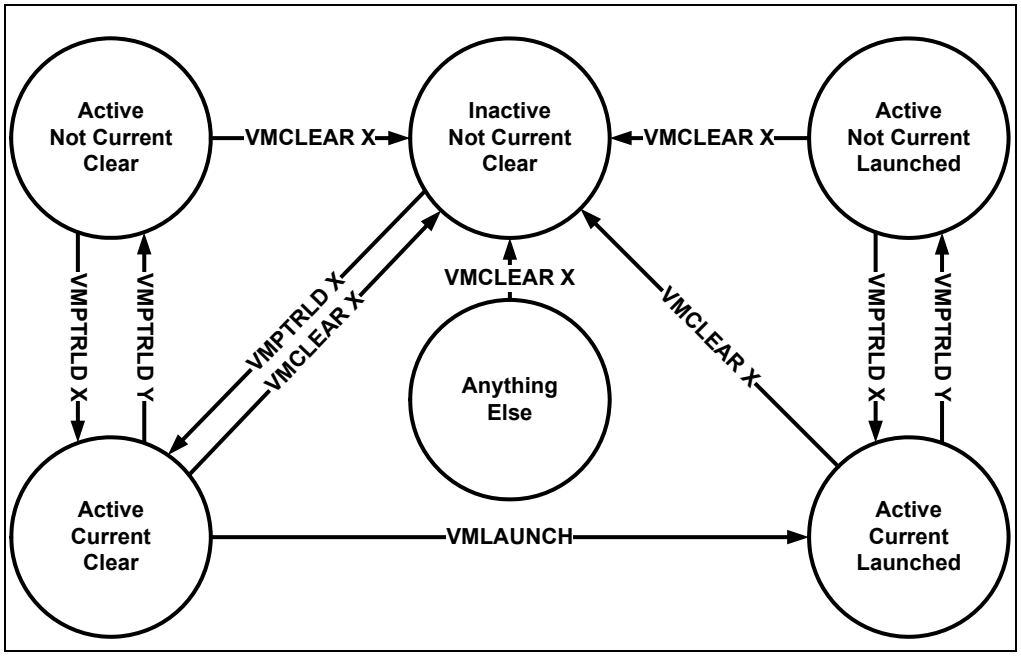

Figure 25-1. States of VMCS X

Because a shadow VMCS (see Section 25.10) cannot be used for VM entry, the launch state of a shadow VMCS is not meaningful. Figure 25-1 does not illustrate all the ways in which a shadow VMCS may be made active.

25.2 FORMAT OF THE VMCS REGION

A VMCS region comprises up to 4-KBytes.[1] The format of a VMCS region is given in Table 25-1.

Table 25-1. Format of the VMCS Region

Byte Offset	Contents
0	Bits 30:0: VMCS revision identifier Bit 31: shadow-VMCS indicator (see Section 25.10)
4	VMX-abort indicator
8	VMCS data (implementation-specific format)

1. The exact size is implementation specific and can be determined by consulting the VMX capability MSR IA32_VMX_BASIC to determine the size of the VMCS region (see Appendix A.1).

The first 4 bytes of the VMCS region contain the **VMCS revision identifier** at bits 30:0.[1] Processors that maintain VMCS data in different formats (see below) use different VMCS revision identifiers. These identifiers enable software to avoid using a VMCS region formatted for one processor on a processor that uses a different format.[2] Bit 31 of this 4-byte region indicates whether the VMCS is a shadow VMCS (see Section 25.10).

Software should write the VMCS revision identifier to the VMCS region before using that region for a VMCS. The VMCS revision identifier is never written by the processor; VMPTRLD fails if its operand references a VMCS region whose VMCS revision identifier differs from that used by the processor. (VMPTRLD also fails if the shadow-VMCS indicator is 1 and the processor does not support the 1-setting of the "VMCS shadowing" VM-execution control; see Section 25.6.2) Software can discover the VMCS revision identifier that a processor uses by reading the VMX capability MSR IA32_VMX_BASIC (see Appendix A.1).

Software should clear or set the shadow-VMCS indicator depending on whether the VMCS is to be an ordinary VMCS or a shadow VMCS (see Section 25.10). VMPTRLD fails if the shadow-VMCS indicator is set and the processor does not support the 1-setting of the "VMCS shadowing" VM-execution control. Software can discover support for this setting by reading the VMX capability MSR IA32_VMX_PROCBASED_CTLS2 (see Appendix A.3.3).

The next 4 bytes of the VMCS region are used for the **VMX-abort indicator**. The contents of these bits do not control processor operation in any way. A logical processor writes a non-zero value into these bits if a VMX abort occurs (see Section 28.7). Software may also write into this field.

The remainder of the VMCS region is used for **VMCS data** (those parts of the VMCS that control VMX non-root operation and the VMX transitions). The format of these data is implementation-specific. VMCS data are discussed in Section 25.3 through Section 25.9. To ensure proper behavior in VMX operation, software should maintain the VMCS region and related structures (enumerated in Section 25.11.4) in writeback cacheable memory. Future implementations may allow or require a different memory type[3]. Software should consult the VMX capability MSR IA32_VMX_BASIC (see Appendix A.1).

25.3 ORGANIZATION OF VMCS DATA

The VMCS data are organized into six logical groups:

- **Guest-state area.** Processor state is saved into the guest-state area on VM exits and loaded from there on VM entries.
- **Host-state area.** Processor state is loaded from the host-state area on VM exits.
- **VM-execution control fields.** These fields control processor behavior in VMX non-root operation. They determine in part the causes of VM exits.
- **VM-exit control fields.** These fields control VM exits.
- **VM-entry control fields.** These fields control VM entries.
- **VM-exit information fields.** These fields receive information on VM exits and describe the cause and the nature of VM exits. On some processors, these fields are read-only.[4]

The VM-execution control fields, the VM-exit control fields, and the VM-entry control fields are sometimes referred to collectively as VMX controls.

1. Earlier versions of this manual specified that the VMCS revision identifier was a 32-bit field. For all processors produced prior to this change, bit 31 of the VMCS revision identifier was 0.
2. Logical processors that use the same VMCS revision identifier use the same size for VMCS regions.
3. Alternatively, software may map any of these regions or structures with the UC memory type. Doing so is strongly discouraged unless necessary as it will cause the performance of transitions using those structures to suffer significantly. In addition, the processor will continue to use the memory type reported in the VMX capability MSR IA32_VMX_BASIC with exceptions noted in Appendix A.1.
4. Software can discover whether these fields can be written by reading the VMX capability MSR IA32_VMX_MISC (see Appendix A.6).

25.4 GUEST-STATE AREA

This section describes fields contained in the guest-state area of the VMCS. VM entries load processor state from these fields and VM exits store processor state into these fields. See Section 27.3.2 and Section 28.3 for details.

25.4.1 Guest Register State

The following fields in the guest-state area correspond to processor registers:

- Control registers CR0, CR3, and CR4 (64 bits each; 32 bits on processors that do not support Intel 64 architecture).
- Debug register DR7 (64 bits; 32 bits on processors that do not support Intel 64 architecture).
- RSP, RIP, and RFLAGS (64 bits each; 32 bits on processors that do not support Intel 64 architecture).[1]
- The following fields for each of the registers CS, SS, DS, ES, FS, GS, LDTR, and TR:
  - Selector (16 bits).
  - Base address (64 bits; 32 bits on processors that do not support Intel 64 architecture). The base-address fields for CS, SS, DS, and ES have only 32 architecturally-defined bits; nevertheless, the corresponding VMCS fields have 64 bits on processors that support Intel 64 architecture.
  - Segment limit (32 bits). The limit field is always a measure in bytes.
  - Access rights (32 bits). The format of this field is given in Table 25-2 and detailed as follows:
    - The low 16 bits correspond to bits 23:8 of the upper 32 bits of a 64-bit segment descriptor. While bits 19:16 of code-segment and data-segment descriptors correspond to the upper 4 bits of the segment limit, the corresponding bits (bits 11:8) are reserved in this VMCS field.
    - Bit 16 indicates an **unusable segment**. Attempts to use such a segment fault except in 64-bit mode. In general, a segment register is unusable if it has been loaded with a null selector.[2]
    - Bits 31:17 are reserved.

Table 25-2. Format of Access Rights

Bit Position(s)	Field
3:0	Segment type
4	S — Descriptor type (0 = system; 1 = code or data)
6:5	DPL — Descriptor privilege level
7	P — Segment present
11:8	Reserved
12	AVL — Available for use by system software

1. This chapter uses the notation RAX, RIP, RSP, RFLAGS, etc. for processor registers because most processors that support VMX operation also support Intel 64 architecture. For processors that do not support Intel 64 architecture, this notation refers to the 32-bit forms of those registers (EAX, EIP, ESP, EFLAGS, etc.). In a few places, notation such as EAX is used to refer specifically to lower 32 bits of the indicated register.
2. There are a few exceptions to this statement. For example, a segment with a non-null selector may be unusable following a task switch that fails after its commit point; see "Interrupt 10—Invalid TSS Exception (#TS)" in Section 6.14, "Exception and Interrupt Handling in 64-bit Mode," of the *Intel® 64 and IA-32 Architectures Software Developer's Manual, Volume 3A*. In contrast, the TR register is usable after processor reset despite having a null selector; see Table 11-1 in the *Intel® 64 and IA-32 Architectures Software Developer's Manual, Volume 3A*.

Table 25-2. Format of Access Rights (Contd.)

Bit Position(s)	Field
13	Reserved (except for CS) L — 64-bit mode active (for CS only)
14	D/B — Default operation size (0 = 16-bit segment; 1 = 32-bit segment)
15	G — Granularity
16	Segment unusable (0 = usable; 1 = unusable)
31:17	Reserved

The base address, segment limit, and access rights compose the "hidden" part (or "descriptor cache") of each segment register. These data are included in the VMCS because it is possible for a segment register's descriptor cache to be inconsistent with the segment descriptor in memory (in the GDT or the LDT) referenced by the segment register's selector.

The value of the DPL field for SS is always equal to the logical processor's current privilege level (CPL).[1]

On some processors, executions of VMWRITE ignore attempts to write non-zero values to any of bits 11:8 or bits 31:17. On such processors, VMREAD always returns 0 for those bits, and VM entry treats those bits as if they were all 0 (see Section 27.3.1.2).

- The following fields for each of the registers GDTR and IDTR:
  - Base address (64 bits; 32 bits on processors that do not support Intel 64 architecture).
  - Limit (32 bits). The limit fields contain 32 bits even though these fields are specified as only 16 bits in the architecture.
- The following MSRs:
  - IA32_DEBUGCTL (64 bits)
  - IA32_SYSENTER_CS (32 bits)
  - IA32_SYSENTER_ESP and IA32_SYSENTER_EIP (64 bits; 32 bits on processors that do not support Intel 64 architecture)
  - IA32_PERF_GLOBAL_CTRL (64 bits). This field is supported only on processors that support the 1-setting of the "load IA32_PERF_GLOBAL_CTRL" VM-entry control.
  - IA32_PAT (64 bits). This field is supported only on processors that support either the 1-setting of the "load IA32_PAT" VM-entry control or that of the "save IA32_PAT" VM-exit control.
  - IA32_EFER (64 bits). This field is supported only on processors that support either the 1-setting of the "load IA32_EFER" VM-entry control or that of the "save IA32_EFER" VM-exit control.
  - IA32_BNDCFGS (64 bits). This field is supported only on processors that support either the 1-setting of the "load IA32_BNDCFGS" VM-entry control or that of the "clear IA32_BNDCFGS" VM-exit control.
  - IA32_RTIT_CTL (64 bits). This field is supported only on processors that support either the 1-setting of the "load IA32_RTIT_CTL" VM-entry control or that of the "clear IA32_RTIT_CTL" VM-exit control.
  - IA32_LBR_CTL (64 bits). This field is supported only on processors that support either the 1-setting of the "load guest IA32_LBR_CTL" VM-entry control or that of the "clear IA32_LBR_CTL" VM-exit control.
  - IA32_S_CET (64 bits; 32 bits on processors that do not support Intel 64 architecture). This field is supported only on processors that support the 1-setting of the "load CET state" VM-entry control.
  - IA32_INTERRUPT_SSP_TABLE_ADDR (64 bits; 32 bits on processors that do not support Intel 64 architecture). This field is supported only on processors that support the 1-setting of the "load CET state" VM-entry control.

1. In protected mode, CPL is also associated with the RPL field in the CS selector. However, the RPL fields are not meaningful in real-address mode or in virtual-8086 mode.

— IA32_PKRS (64 bits). This field is supported only on processors that support the 1-setting of the "load PKRS" VM-entry control.

- The shadow-stack pointer register SSP (64 bits; 32 bits on processors that do not support Intel 64 architecture). This field is supported only on processors that support the 1-setting of the "load CET state" VM-entry control.
- The register SMBASE (32 bits). This register contains the base address of the logical processor's SMRAM image.

25.4.2 Guest Non-Register State

In addition to the register state described in Section 25.4.1, the guest-state area includes the following fields that characterize guest state but which do not correspond to processor registers:

- **Activity state** (32 bits). This field identifies the logical processor's activity state. When a logical processor is executing instructions normally, it is in the **active state**. Execution of certain instructions and the occurrence of certain events may cause a logical processor to transition to an **inactive state** in which it ceases to execute instructions.

  The following activity states are defined:[1]

  — 0: **Active**. The logical processor is executing instructions normally.

  — 1: **HLT**. The logical processor is inactive because it executed the HLT instruction.

  — 2: **Shutdown**. The logical processor is inactive because it incurred a **triple fault**[2] or some other serious error.

  — 3: **Wait-for-SIPI**. The logical processor is inactive because it is waiting for a startup-IPI (SIPI).

  Future processors may include support for other activity states. Software should read the VMX capability MSR IA32_VMX_MISC (see Appendix A.6) to determine what activity states are supported.
- **Interruptibility state** (32 bits). The IA-32 architecture includes features that permit certain events to be blocked for a period of time. This field contains information about such blocking. Details and the format of this field are given in Table 25-3.

Table 25-3. Format of Interruptibility State

Bit Position(s)	Bit Name	Notes
0	Blocking by STI	See the "STI—Set Interrupt Flag" section in Chapter 4 of the *Intel® 64 and IA-32 Architectures Software Developer's Manual, Volume 2B*. Execution of STI with RFLAGS.IF = 0 blocks maskable interrupts on the instruction boundary following its execution.[1] Setting this bit indicates that this blocking is in effect.
1	Blocking by MOV SS	See Section 6.8.3, "Masking Exceptions and Interrupts When Switching Stacks," in the *Intel® 64 and IA-32 Architectures Software Developer's Manual, Volume 3A*. Execution of a MOV to SS or a POP to SS blocks or suppresses certain debug exceptions as well as interrupts (maskable and nonmaskable) on the instruction boundary following its execution. Setting this bit indicates that this blocking is in effect.[2] This document uses the term "blocking by MOV SS," but it applies equally to POP SS.
2	Blocking by SMI	See Section 32.2, "System Management Interrupt (SMI)." System-management interrupts (SMIs) are disabled while the processor is in system-management mode (SMM). Setting this bit indicates that blocking of SMIs is in effect.

1. Execution of the MWAIT instruction may put a logical processor into an inactive state. However, this VMCS field never reflects this state. See Section 28.1.
2. A triple fault occurs when a logical processor encounters an exception while attempting to deliver a double fault.

Table 25-3. Format of Interruptibility State (Contd.)

Bit Position(s)	Bit Name	Notes
3	Blocking by NMI	See Section 6.7.1, "Handling Multiple NMIs," in the *Intel® 64 and IA-32 Architectures Software Developer's Manual, Volume 3A* and Section 32.8, "NMI Handling While in SMM." Delivery of a non-maskable interrupt (NMI) or a system-management interrupt (SMI) blocks subsequent NMIs until the next execution of IRET. See Section 26.3 for how this behavior of IRET may change in VMX non-root operation. Setting this bit indicates that blocking of NMIs is in effect. Clearing this bit does not imply that NMIs are not (temporarily) blocked for other reasons. If the "virtual NMIs" VM-execution control (see Section 25.6.1) is 1, this bit does not control the blocking of NMIs. Instead, it refers to "virtual-NMI blocking" (the fact that guest software is not ready for an NMI).
4	Enclave interruption	Set to 1 if the VM exit occurred while the logical processor was in enclave mode. Such VM exits includes those caused by interrupts, non-maskable interrupts, system-management interrupts, INIT signals, and exceptions occurring in enclave mode as well as exceptions encountered during the delivery of such events incident to enclave mode. A VM exit that is incident to delivery of an event injected by VM entry leaves this bit unmodified.
31:5	Reserved	VM entry will fail if these bits are not 0. See Section 27.3.1.5.

NOTES:

1. Nonmaskable interrupts and system-management interrupts may also be inhibited on the instruction boundary following such an execution of STI.
2. System-management interrupts may also be inhibited on the instruction boundary following such an execution of MOV or POP.

- **Pending debug exceptions** (64 bits; 32 bits on processors that do not support Intel 64 architecture). IA-32 processors may recognize one or more debug exceptions without immediately delivering them.[1] This field contains information about such exceptions. This field is described in Table 25-4.

Table 25-4. Format of Pending-Debug-Exceptions

Bit Position(s)	Bit Name	Notes
3:0	B3 – B0	When set, each of these bits indicates that the corresponding breakpoint condition was met. Any of these bits may be set even if the corresponding enabling bit in DR7 is not set.
11:4	Reserved	VM entry fails if these bits are not 0. See Section 27.3.1.5.
12	Enabled breakpoint	When set, this bit indicates that at least one data or I/O breakpoint was met and was enabled in DR7.
13	Reserved	VM entry fails if this bit is not 0. See Section 27.3.1.5.
14	BS	When set, this bit indicates that a debug exception would have been triggered by single-step execution mode.
15	Reserved	VM entry fails if this bit is not 0. See Section 27.3.1.5.

1. For example, execution of a MOV to SS or a POP to SS may inhibit some debug exceptions for one instruction. See Section 6.8.3 of *Intel® 64 and IA-32 Architectures Software Developer's Manual, Volume 3A*. In addition, certain events incident to an instruction (for example, an INIT signal) may take priority over debug traps generated by that instruction. See Table 6-2 in the *Intel® 64 and IA-32 Architectures Software Developer's Manual, Volume 3A*.

Table 25-4. Format of Pending-Debug-Exceptions (Contd.)

Bit Position(s)	Bit Name	Notes
16	RTM	When set, this bit indicates that a debug exception (#DB) or a breakpoint exception (#BP) occurred inside an RTM region while advanced debugging of RTM transactional regions was enabled (see Section 16.3.7, "RTM-Enabled Debugger Support," of *Intel® 64 and IA-32 Architectures Software Developer's Manual, Volume 1*).[1]
63:17	Reserved	VM entry fails if these bits are not 0. See Section 27.3.1.5. Bits 63:32 exist only on processors that support Intel 64 architecture.

NOTES:

1. In general, the format of this field matches that of DR6. However, DR6 **clears** bit 16 to indicate an RTM-related exception, while this field **sets** the bit to indicate that condition.

- **VMCS link pointer** (64 bits). If the "VMCS shadowing" VM-execution control is 1, the VMREAD and VMWRITE instructions access the VMCS referenced by this pointer (see Section 25.10). Otherwise, software should set this field to FFFFFFFF_FFFFFFFFH to avoid VM-entry failures (see Section 27.3.1.5).
- **VMX-preemption timer value** (32 bits). This field is supported only on processors that support the 1-setting of the "activate VMX-preemption timer" VM-execution control. This field contains the value that the VMX-preemption timer will use following the next VM entry with that setting. See Section 26.5.1 and Section 27.7.4.
- **Page-directory-pointer-table entries** (PDPTEs; 64 bits each). These four (4) fields (PDPTE0, PDPTE1, PDPTE2, and PDPTE3) are supported only on processors that support the 1-setting of the "enable EPT" VM-execution control. They correspond to the PDPTEs referenced by CR3 when PAE paging is in use (see Section 4.4 in the *Intel® 64 and IA-32 Architectures Software Developer's Manual, Volume 3A*). They are used only if the "enable EPT" VM-execution control is 1.
- **Guest interrupt status** (16 bits). This field is supported only on processors that support the 1-setting of the "virtual-interrupt delivery" VM-execution control. It characterizes part of the guest's virtual-APIC state and does not correspond to any processor or APIC registers. It comprises two 8-bit subfields:
  - **Requesting virtual interrupt (RVI)**. This is the low byte of the guest interrupt status. The processor treats this value as the vector of the highest priority virtual interrupt that is requesting service. (The value 0 implies that there is no such interrupt.)
  - **Servicing virtual interrupt (SVI)**. This is the high byte of the guest interrupt status. The processor treats this value as the vector of the highest priority virtual interrupt that is in service. (The value 0 implies that there is no such interrupt.)

  See Chapter 30 for more information on the use of this field.
- **PML index** (16 bits). This field is supported only on processors that support the 1-setting of the "enable PML" VM-execution control. It contains the logical index of the next entry in the page-modification log. Because the page-modification log comprises 512 entries, the PML index is typically a value in the range 0–511. Details of the page-modification log and use of the PML index are given in Section 29.3.6.

25.5 HOST-STATE AREA

This section describes fields contained in the host-state area of the VMCS. As noted earlier, processor state is loaded from these fields on every VM exit (see Section 28.5).

All fields in the host-state area correspond to processor registers:

- CR0, CR3, and CR4 (64 bits each; 32 bits on processors that do not support Intel 64 architecture).
- RSP and RIP (64 bits each; 32 bits on processors that do not support Intel 64 architecture).
- Selector fields (16 bits each) for the segment registers CS, SS, DS, ES, FS, GS, and TR. There is no field in the host-state area for the LDTR selector.

- Base-address fields for FS, GS, TR, GDTR, and IDTR (64 bits each; 32 bits on processors that do not support Intel 64 architecture).
- The following MSRs:
  - IA32_SYSENTER_CS (32 bits)
  - IA32_SYSENTER_ESP and IA32_SYSENTER_EIP (64 bits; 32 bits on processors that do not support Intel 64 architecture).
  - IA32_PERF_GLOBAL_CTRL (64 bits). This field is supported only on processors that support the 1-setting of the "load IA32_PERF_GLOBAL_CTRL" VM-exit control.
  - IA32_PAT (64 bits). This field is supported only on processors that support the 1-setting of the "load IA32_PAT" VM-exit control.
  - IA32_EFER (64 bits). This field is supported only on processors that support the 1-setting of the "load IA32_EFER" VM-exit control.
  - IA32_S_CET (64 bits; 32 bits on processors that do not support Intel 64 architecture). This field is supported only on processors that support the 1-setting of the "load CET state" VM-exit control.
  - IA32_INTERRUPT_SSP_TABLE_ADDR (64 bits; 32 bits on processors that do not support Intel 64 architecture). This field is supported only on processors that support the 1-setting of the "load CET state" VM-exit control.
  - IA32_PKRS (64 bits). This field is supported only on processors that support the 1-setting of the "load PKRS" VM-exit control.
- The shadow-stack pointer register SSP (64 bits; 32 bits on processors that do not support Intel 64 architecture). This field is supported only on processors that support the 1-setting of the "load CET state" VM-exit control.

In addition to the state identified here, some processor state components are loaded with fixed values on every VM exit; there are no fields corresponding to these components in the host-state area. See Section 28.5 for details of how state is loaded on VM exits.

25.6 VM-EXECUTION CONTROL FIELDS

The VM-execution control fields govern VMX non-root operation. These are described in Section 25.6.1 through Section 25.6.8.

25.6.1 Pin-Based VM-Execution Controls

The pin-based VM-execution controls constitute a 32-bit vector that governs the handling of asynchronous events (for example: interrupts).[1] Table 25-5 lists the controls. See Chapter 28 for how these controls affect processor behavior in VMX non-root operation.

1. Some asynchronous events cause VM exits regardless of the settings of the pin-based VM-execution controls (see Section 26.2).

Table 25-5. Definitions of Pin-Based VM-Execution Controls

Bit Position(s)	Name	Description
0	External-interrupt exiting	If this control is 1, external interrupts cause VM exits. Otherwise, they are delivered normally through the guest interrupt-descriptor table (IDT). If this control is 1, the value of RFLAGS.IF does not affect interrupt blocking.
3	NMI exiting	If this control is 1, non-maskable interrupts (NMIs) cause VM exits. Otherwise, they are delivered normally using descriptor 2 of the IDT. This control also determines interactions between IRET and blocking by NMI (see Section 26.3).
5	Virtual NMIs	If this control is 1, NMIs are never blocked and the "blocking by NMI" bit (bit 3) in the interruptibility-state field indicates "virtual-NMI blocking" (see Table 25-3). This control also interacts with the "NMI-window exiting" VM-execution control (see Section 25.6.2).
6	Activate VMX-preemption timer	If this control is 1, the VMX-preemption timer counts down in VMX non-root operation; see Section 26.5.1. A VM exit occurs when the timer counts down to zero; see Section 26.2.
7	Process posted interrupts	If this control is 1, the processor treats interrupts with the posted-interrupt notification vector (see Section 25.6.8) specially, updating the virtual-APIC page with posted-interrupt requests (see Section 30.6).

All other bits in this field are reserved, some to 0 and some to 1. Software should consult the VMX capability MSRs IA32_VMX_PINBASED_CTLS and IA32_VMX_TRUE_PINBASED_CTLS (see Appendix A.3.1) to determine how to set reserved bits. Failure to set reserved bits properly causes subsequent VM entries to fail (see Section 27.2.1.1).

The first processors to support the virtual-machine extensions supported only the 1-settings of bits 1, 2, and 4. The VMX capability MSR IA32_VMX_PINBASED_CTLS will always report that these bits must be 1. Logical processors that support the 0-settings of any of these bits will support the VMX capability MSR IA32_VMX_TRUE_PINBASED_CTLS MSR, and software should consult this MSR to discover support for the 0-settings of these bits. Software that is not aware of the functionality of any one of these bits should set that bit to 1.

25.6.2 Processor-Based VM-Execution Controls

The processor-based VM-execution controls constitute three vectors that govern the handling of synchronous events, mainly those caused by the execution of specific instructions.[1] These are the **primary processor-based VM-execution controls** (32 bits), the **secondary processor-based VM-execution controls** (32 bits), and the tertiary **VM-execution controls** (64 bits).

Table 25-6 lists the primary processor-based VM-execution controls. See Chapter 26 for more details of how these controls affect processor behavior in VMX non-root operation.

Table 25-6. Definitions of Primary Processor-Based VM-Execution Controls

Bit Position(s)	Name	Description
2	Interrupt-window exiting	If this control is 1, a VM exit occurs at the beginning of any instruction if RFLAGS.IF = 1 and there are no other blocking of interrupts (see Section 25.4.2).
3	Use TSC offsetting	This control determines whether executions of RDTSC, executions of RDTSCP, and executions of RDMSR that read from the IA32_TIME_STAMP_COUNTER MSR return a value modified by the TSC offset field (see Section 25.6.5 and Section 26.3).
7	HLT exiting	This control determines whether executions of HLT cause VM exits.
9	INVLPG exiting	This determines whether executions of INVLPG cause VM exits.
10	MWAIT exiting	This control determines whether executions of MWAIT cause VM exits.
11	RDPMC exiting	This control determines whether executions of RDPMC cause VM exits.

1. Some instructions cause VM exits regardless of the settings of the processor-based VM-execution controls (see Section 26.1.2), as do task switches (see Section 26.2).

Table 25-6. Definitions of Primary Processor-Based VM-Execution Controls (Contd.)

Bit Position(s)	Name	Description
12	RDTSC exiting	This control determines whether executions of RDTSC and RDTSCP cause VM exits.
15	CR3-load exiting	In conjunction with the CR3-target controls (see Section 25.6.7), this control determines whether executions of MOV to CR3 cause VM exits. See Section 26.1.3. The first processors to support the virtual-machine extensions supported only the 1-setting of this control.
16	CR3-store exiting	This control determines whether executions of MOV from CR3 cause VM exits. The first processors to support the virtual-machine extensions supported only the 1-setting of this control.
17	Activate tertiary controls	This control determines whether the tertiary processor-based VM-execution controls are used. If this control is 0, the logical processor operates as if all the tertiary processor-based VM-execution controls were also 0.
19	CR8-load exiting	This control determines whether executions of MOV to CR8 cause VM exits.
20	CR8-store exiting	This control determines whether executions of MOV from CR8 cause VM exits.
21	Use TPR shadow	Setting this control to 1 enables TPR virtualization and other APIC-virtualization features. See Chapter 30.
22	NMI-window exiting	If this control is 1, a VM exit occurs at the beginning of any instruction if there is no virtual-NMI blocking (see Section 25.4.2).
23	MOV-DR exiting	This control determines whether executions of MOV DR cause VM exits.
24	Unconditional I/O exiting	This control determines whether executions of I/O instructions (IN, INS/INSB/INSW/INSD, OUT, and OUTS/OUTSB/OUTSW/OUTSD) cause VM exits.
25	Use I/O bitmaps	This control determines whether I/O bitmaps are used to restrict executions of I/O instructions (see Section 25.6.4 and Section 26.1.3). For this control, "0" means "do not use I/O bitmaps" and "1" means "use I/O bitmaps." If the I/O bitmaps are used, the setting of the "unconditional I/O exiting" control is ignored.
27	Monitor trap flag	If this control is 1, the monitor trap flag debugging feature is enabled. See Section 26.5.2.
28	Use MSR bitmaps	This control determines whether MSR bitmaps are used to control execution of the RDMSR and WRMSR instructions (see Section 25.6.9 and Section 26.1.3). For this control, "0" means "do not use MSR bitmaps" and "1" means "use MSR bitmaps." If the MSR bitmaps are not used, all executions of the RDMSR and WRMSR instructions cause VM exits.
29	MONITOR exiting	This control determines whether executions of MONITOR cause VM exits.
30	PAUSE exiting	This control determines whether executions of PAUSE cause VM exits.
31	Activate secondary controls	This control determines whether the secondary processor-based VM-execution controls are used. If this control is 0, the logical processor operates as if all the secondary processor-based VM-execution controls were also 0.

All other bits in this field are reserved, some to 0 and some to 1. Software should consult the VMX capability MSRs IA32_VMX_PROCBASED_CTLS and IA32_VMX_TRUE_PROCBASED_CTLS (see Appendix A.3.2) to determine how to set reserved bits. Failure to set reserved bits properly causes subsequent VM entries to fail (see Section 27.2.1.1).

The first processors to support the virtual-machine extensions supported only the 1-settings of bits 1, 4–6, 8, 13–16, and 26. The VMX capability MSR IA32_VMX_PROCBASED_CTLS will always report that these bits must be 1. Logical processors that support the 0-settings of any of these bits will support the VMX capability MSR IA32_VMX_TRUE_PROCBASED_CTLS MSR, and software should consult this MSR to discover support for the 0-settings of these bits. Software that is not aware of the functionality of any one of these bits should set that bit to 1.

Bit 31 of the primary processor-based VM-execution controls determines whether the secondary processor-based VM-execution controls are used. If that bit is 0, VM entry and VMX non-root operation function as if all the secondary processor-based VM-execution controls were 0. Processors that support only the 0-setting of bit 31 of

the primary processor-based VM-execution controls do not support the secondary processor-based VM-execution controls.

Table 25-7 lists the secondary processor-based VM-execution controls. See Chapter 26 for more details of how these controls affect processor behavior in VMX non-root operation.

Table 25-7. Definitions of Secondary Processor-Based VM-Execution Controls

Bit Position(s)	Name	Description
0	Virtualize APIC accesses	If this control is 1, the logical processor treats specially accesses to the page with the APIC-access address. See Section 30.4.
1	Enable EPT	If this control is 1, extended page tables (EPT) are enabled. See Section 29.3.
2	Descriptor-table exiting	This control determines whether executions of LGDT, LIDT, LLDT, LTR, SGDT, SIDT, SLDT, and STR cause VM exits.
3	Enable RDTSCP	If this control is 0, any execution of RDTSCP causes an invalid-opcode exception (#UD).
4	Virtualize x2APIC mode	If this control is 1, the logical processor treats specially RDMSR and WRMSR to APIC MSRs (in the range 800H–8FFH). See Section 30.5.
5	Enable VPID	If this control is 1, cached translations of linear addresses are associated with a virtual-processor identifier (VPID). See Section 29.1.
6	WBINVD exiting	This control determines whether executions of WBINVD and WBNOINVD cause VM exits.
7	Unrestricted guest	This control determines whether guest software may run in unpaged protected mode or in real-address mode.
8	APIC-register virtualization	If this control is 1, the logical processor virtualizes certain APIC accesses. See Section 30.4 and Section 30.5.
9	Virtual-interrupt delivery	This controls enables the evaluation and delivery of pending virtual interrupts as well as the emulation of writes to the APIC registers that control interrupt prioritization.
10	PAUSE-loop exiting	This control determines whether a series of executions of PAUSE can cause a VM exit (see Section 25.6.13 and Section 26.1.3).
11	RDRAND exiting	This control determines whether executions of RDRAND cause VM exits.
12	Enable INVPCID	If this control is 0, any execution of INVPCID causes a #UD.
13	Enable VM functions	Setting this control to 1 enables use of the VMFUNC instruction in VMX non-root operation. See Section 26.5.6.
14	VMCS shadowing	If this control is 1, executions of VMREAD and VMWRITE in VMX non-root operation may access a shadow VMCS (instead of causing VM exits). See Section 25.10 and Section 31.3.
15	Enable ENCLS exiting	If this control is 1, executions of ENCLS consult the ENCLS-exiting bitmap to determine whether the instruction causes a VM exit. See Section 25.6.16 and Section 26.1.3.
16	RDSEED exiting	This control determines whether executions of RDSEED cause VM exits.
17	Enable PML	If this control is 1, an access to a guest-physical address that sets an EPT dirty bit first adds an entry to the page-modification log. See Section 29.3.6.
18	EPT-violation #VE	If this control is 1, EPT violations may cause virtualization exceptions (#VE) instead of VM exits. See Section 26.5.7.
19	Conceal VMX from PT	If this control is 1, Intel Processor Trace suppresses from PIPs an indication that the processor was in VMX non-root operation and omits a VMCS packet from any PSB+ produced in VMX non-root operation (see Chapter 33).
20	Enable XSAVES/XRSTORS	If this control is 0, any execution of XSAVES or XRSTORS causes a #UD.
21	PASID translation	If this control is 1, PASID translation is performed for executions of ENQCMD and ENQCMDS. See Section 26.5.8.
22	Mode-based execute control for EPT	If this control is 1, EPT execute permissions are based on whether the linear address being accessed is supervisor mode or user mode. See Chapter 29.

Table 25-7. Definitions of Secondary Processor-Based VM-Execution Controls (Contd.)

Bit Position(s)	Name	Description
23	Sub-page write permissions for EPT	If this control is 1, EPT write permissions may be specified at the granularity of 128 bytes. See Section 29.3.4.
24	Intel PT uses guest physical addresses	If this control is 1, all output addresses used by Intel Processor Trace are treated as guest-physical addresses and translated using EPT. See Section 26.5.4.
25	Use TSC scaling	This control determines whether executions of RDTSC, executions of RDTSCP, and executions of RDMSR that read from the IA32_TIME_STAMP_COUNTER MSR return a value modified by the TSC multiplier field (see Section 25.6.5 and Section 26.3).
26	Enable user wait and pause	If this control is 0, any execution of TPAUSE, UMONITOR, or UMWAIT causes a #UD.
27	Enable PCONFIG	If this control is 0, any execution of PCONFIG causes a #UD.
28	Enable ENCLV exiting	If this control is 1, executions of ENCLV consult the ENCLV-exiting bitmap to determine whether the instruction causes a VM exit. See Section 25.6.17 and Section 26.1.3.

All other bits in this field are reserved to 0. Software should consult the VMX capability MSR IA32_VMX_PROCBASED_CTLS2 (see Appendix A.3.3) to determine which bits may be set to 1. Failure to clear reserved bits causes subsequent VM entries to fail (see Section 27.2.1.1).

Bit 17 of the primary processor-based VM-execution controls determines whether the tertiary processor-based VM-execution controls are used. If that bit is 0, VM entry and VMX non-root operation function as if all the tertiary processor-based VM-execution controls were 0. Processors that support only the 0-setting of bit 17 of the primary processor-based VM-execution controls do not support the tertiary processor-based VM-execution controls.

Table 25-8 lists the tertiary processor-based VM-execution controls. See Chapter 26 for more details of how these controls affect processor behavior in VMX non-root operation.

Table 25-8. Definitions of Tertiary Processor-Based VM-Execution Controls

Bit Position(s)	Name	Description
0	LOADIWKEY exiting	This control determines whether executions of LOADIWKEY cause VM exits.
1	Enable HLAT	This control enables hypervisor-managed linear-address translation. See Section 4.5.1.
2	EPT paging-write control	If this control is 1, EPT permissions can be specified to allow writes only for paging-related updates. See Section 29.3.3.2.
3	Guest-paging verification	If this control is 1, EPT permissions can be specified to prevent accesses using linear addresses whose translation has certain properties. See Section 29.3.3.2.
4	IPI virtualization	If this control is 1, virtualization of interprocessor interrupts (IPIs) is enabled. See Section 30.1.6.

All other bits in this field are reserved to 0. Software should consult the VMX capability MSR IA32_VMX_PROCBASED_CTLS3 (see Appendix A.3.4) to determine which bits may be set to 1. Failure to clear reserved bits causes subsequent VM entries to fail (see Section 27.2.1.1).

25.6.3 Exception Bitmap

The **exception bitmap** is a 32-bit field that contains one bit for each exception. When an exception occurs, its vector is used to select a bit in this field. If the bit is 1, the exception causes a VM exit. If the bit is 0, the exception is delivered normally through the IDT, using the descriptor corresponding to the exception's vector.

Whether a page fault (exception with vector 14) causes a VM exit is determined by bit 14 in the exception bitmap as well as the error code produced by the page fault and two 32-bit fields in the VMCS (the **page-fault error-code mask** and **page-fault error-code match)**. See Section 26.2 for details.

25.6.4 I/O-Bitmap Addresses

The VM-execution control fields include the 64-bit physical addresses of **I/O bitmaps** A and B (each of which are 4 KBytes in size). I/O bitmap A contains one bit for each I/O port in the range 0000H through 7FFFH; I/O bitmap B contains bits for ports in the range 8000H through FFFFH.

A logical processor uses these bitmaps if and only if the "use I/O bitmaps" control is 1. If the bitmaps are used, execution of an I/O instruction causes a VM exit if any bit in the I/O bitmaps corresponding to a port it accesses is 1. See Section 26.1.3 for details. If the bitmaps are used, their addresses must be 4-KByte aligned.

25.6.5 Time-Stamp Counter Offset and Multiplier

The VM-execution control fields include a 64-bit **TSC-offset** field. If the "RDTSC exiting" control is 0 and the "use TSC offsetting" control is 1, this field controls executions of the RDTSC and RDTSCP instructions. It also controls executions of the RDMSR instruction that read from the IA32_TIME_STAMP_COUNTER MSR. For all of these, the value of the TSC offset is added to the value of the time-stamp counter, and the sum is returned to guest software in EDX:EAX.

Processors that support the 1-setting of the "use TSC scaling" control also support a 64-bit **TSC-multiplier** field. If this control is 1 (and the "RDTSC exiting" control is 0 and the "use TSC offsetting" control is 1), this field also affects the executions of the RDTSC, RDTSCP, and RDMSR instructions identified above. Specifically, the contents of the time-stamp counter is first multiplied by the TSC multiplier before adding the TSC offset.

See Chapter 26 for a detailed treatment of the behavior of RDTSC, RDTSCP, and RDMSR in VMX non-root operation.

25.6.6 Guest/Host Masks and Read Shadows for CR0 and CR4

VM-execution control fields include **guest/host masks** and **read shadows** for the CR0 and CR4 registers. These fields control executions of instructions that access those registers (including CLTS, LMSW, MOV CR, and SMSW). They are 64 bits on processors that support Intel 64 architecture and 32 bits on processors that do not.

In general, bits set to 1 in a guest/host mask correspond to bits "owned" by the host:

- Guest attempts to set them (using CLTS, LMSW, or MOV to CR) to values differing from the corresponding bits in the corresponding read shadow cause VM exits.
- Guest reads (using MOV from CR or SMSW) return values for these bits from the corresponding read shadow.

Bits cleared to 0 correspond to bits "owned" by the guest; guest attempts to modify them succeed and guest reads return values for these bits from the control register itself.

See Chapter 28 for details regarding how these fields affect VMX non-root operation.

25.6.7 CR3-Target Controls

The VM-execution control fields include a set of 4 **CR3-target values** and a **CR3-target count**. The CR3-target values each have 64 bits on processors that support Intel 64 architecture and 32 bits on processors that do not. The CR3-target count has 32 bits on all processors.

An execution of MOV to CR3 in VMX non-root operation does not cause a VM exit if its source operand matches one of these values. If the CR3-target count is *n*, only the first *n* CR3-target values are considered; if the CR3-target count is 0, MOV to CR3 always causes a VM exit

There are no limitations on the values that can be written for the CR3-target values. VM entry fails (see Section 27.2) if the CR3-target count is greater than 4.

Future processors may support a different number of CR3-target values. Software should read the VMX capability MSR IA32_VMX_MISC (see Appendix A.6) to determine the number of values supported.

25.6.8 Controls for APIC Virtualization

There are three mechanisms by which software accesses registers of the logical processor's local APIC:

- If the local APIC is in xAPIC mode, it can perform memory-mapped accesses to addresses in the 4-KByte page referenced by the physical address in the IA32_APIC_BASE MSR (see Section 11.4.4, "Local APIC Status and Location" in the *Intel® 64 and IA-32 Architectures Software Developer's Manual, Volume 3A* and *Intel® 64 Architecture Processor Topology Enumeration*).[1]
- If the local APIC is in x2APIC mode, it can accesses the local APIC's registers using the RDMSR and WRMSR instructions (see *Intel® 64 Architecture Processor Topology Enumeration*).
- In 64-bit mode, it can access the local APIC's task-priority register (TPR) using the MOV CR8 instruction.

Several processor-based VM-execution controls (see Section 25.6.2) control such accesses. These are "use TPR shadow", "virtualize APIC accesses", "virtualize x2APIC mode", "virtual-interrupt delivery", "APIC-register virtualization", and "IPI virtualization". These controls interact with the following fields:

- **APIC-access address** (64 bits). This field contains the physical address of the 4-KByte **APIC-access page**. If the "virtualize APIC accesses" VM-execution control is 1, access to this page may cause VM exits or be virtualized by the processor. See Section 30.4.

  The APIC-access address exists only on processors that support the 1-setting of the "virtualize APIC accesses" VM-execution control.
- **Virtual-APIC address** (64 bits). This field contains the physical address of the 4-KByte **virtual-APIC page**. The processor uses the virtual-APIC page to virtualize certain accesses to APIC registers and to manage virtual interrupts; see Chapter 30.

  Depending on the setting of the controls indicated earlier, the virtual-APIC page may be accessed by the following operations:

  — The MOV CR8 instructions (see Section 30.3).

  — Accesses to the APIC-access page if, in addition, the "virtualize APIC accesses" VM-execution control is 1 (see Section 30.4).

  — The RDMSR and WRMSR instructions if, in addition, the value of ECX is in the range 800H–8FFH (indicating an APIC MSR) and the "virtualize x2APIC mode" VM-execution control is 1 (see Section 30.5).

  If the "use TPR shadow" VM-execution control is 1, VM entry ensures that the virtual-APIC address is 4-KByte aligned. The virtual-APIC address exists only on processors that support the 1-setting of the "use TPR shadow" VM-execution control.
- **TPR threshold** (32 bits). Bits 3:0 of this field determine the threshold below which bits 7:4 of VTPR (see Section 30.1.1) cannot fall. If the "virtual-interrupt delivery" VM-execution control is 0, a VM exit occurs after an operation (e.g., an execution of MOV to CR8) that reduces the value of those bits below the TPR threshold. See Section 30.1.2.

  The TPR threshold exists only on processors that support the 1-setting of the "use TPR shadow" VM-execution control.
- **EOI-exit bitmap** (4 fields; 64 bits each). These fields are supported only on processors that support the 1-setting of the "virtual-interrupt delivery" VM-execution control. They are used to determine which virtualized writes to the APIC's EOI register cause VM exits:

  — EOI_EXIT0 contains bits for vectors from 0 (bit 0) to 63 (bit 63).

  — EOI_EXIT1 contains bits for vectors from 64 (bit 0) to 127 (bit 63).

  — EOI_EXIT2 contains bits for vectors from 128 (bit 0) to 191 (bit 63).

  — EOI_EXIT3 contains bits for vectors from 192 (bit 0) to 255 (bit 63).

  See Section 30.1.4 for more information on the use of this field.
- **Posted-interrupt notification vector** (16 bits). This field is supported only on processors that support the 1-setting of the "process posted interrupts" VM-execution control. Its low 8 bits contain the interrupt vector that is used to notify a logical processor that virtual interrupts have been posted. See Section 30.6 for more information on the use of this field.

1. If the local APIC does not support x2APIC mode, it is always in xAPIC mode.

- **Posted-interrupt descriptor address** (64 bits). This field is supported only on processors that support the 1-setting of the "process posted interrupts" VM-execution control. It is the physical address of a 64-byte aligned posted interrupt descriptor. See Section 30.6 for more information on the use of this field.
- **PID-pointer table address** (64 bits). This field contains the physical address of the **PID-pointer table**. If the "IPI virtualization" VM-execution control is 1, the logical processor uses entries in this table to virtualize IPIs. See Section 30.1.6.
- **Last PID-pointer index** (16 bits). This field contains the index of the last entry in the PID-pointer table.

25.6.9 MSR-Bitmap Address

On processors that support the 1-setting of the "use MSR bitmaps" VM-execution control, the VM-execution control fields include the 64-bit physical address of four contiguous **MSR bitmaps**, which are each 1-KByte in size. This field does not exist on processors that do not support the 1-setting of that control. The four bitmaps are:

- **Read bitmap for low MSRs** (located at the MSR-bitmap address)**.** This contains one bit for each MSR address in the range 00000000H to 00001FFFH. The bit determines whether an execution of RDMSR applied to that MSR causes a VM exit.
- **Read bitmap for high MSRs** (located at the MSR-bitmap address plus 1024)**.** This contains one bit for each MSR address in the range C0000000H toC0001FFFH. The bit determines whether an execution of RDMSR applied to that MSR causes a VM exit.
- **Write bitmap for low MSRs** (located at the MSR-bitmap address plus 2048)**.** This contains one bit for each MSR address in the range 00000000H to 00001FFFH. The bit determines whether an execution of WRMSR applied to that MSR causes a VM exit.
- **Write bitmap for high MSRs** (located at the MSR-bitmap address plus 3072)**.** This contains one bit for each MSR address in the range C0000000H toC0001FFFH. The bit determines whether an execution of WRMSR applied to that MSR causes a VM exit.

A logical processor uses these bitmaps if and only if the "use MSR bitmaps" control is 1. If the bitmaps are used, an execution of RDMSR or WRMSR causes a VM exit if the value of RCX is in neither of the ranges covered by the bitmaps or if the appropriate bit in the MSR bitmaps (corresponding to the instruction and the RCX value) is 1. See Section 26.1.3 for details. If the bitmaps are used, their address must be 4-KByte aligned.

25.6.10 Executive-VMCS Pointer

The executive-VMCS pointer is a 64-bit field used in the dual-monitor treatment of system-management interrupts (SMIs) and system-management mode (SMM). SMM VM exits save this field as described in Section 32.15.2. VM entries that return from SMM use this field as described in Section 32.15.4.

25.6.11 Extended-Page-Table Pointer (EPTP)

The **extended-page-table pointer** (EPTP) contains the address of the base of EPT PML4 table (see Section 29.3.2), as well as other EPT configuration information. The format of this field is shown in Table 25-9.

Table 25-9. Format of Extended-Page-Table Pointer

Bit Position(s)	Field
2:0	EPT paging-structure memory type (see Section 29.3.7): 0 = Uncacheable (UC) 6 = Write-back (WB) Other values are reserved.[1]
5:3	This value is 1 less than the EPT page-walk length (see Section 29.3.2)

Table 25-9. Format of Extended-Page-Table Pointer (Contd.)

Bit Position(s)	Field
6	Setting this control to 1 enables accessed and dirty flags for EPT (see Section 29.3.5)[2]
7	Setting this control to 1 enables enforcement of access rights for supervisor shadow-stack pages (see Section 29.3.3.2)[3]
11:8	Reserved
N–1:12	Bits N–1:12 of the physical address of the 4-KByte aligned EPT PML4 table[4]
63:N	Reserved

NOTES:

1. Software should read the VMX capability MSR IA32_VMX_EPT_VPID_CAP (see Appendix A.10) to determine what EPT paging-structure memory types are supported.
2. Not all processors support accessed and dirty flags for EPT. Software should read the VMX capability MSR IA32_VMX_EPT_VPID_CAP (see Appendix A.10) to determine whether the processor supports this feature.
3. Not all processors enforce access rights for shadow-stack pages. Software should read the VMX capability MSR IA32_VMX_EPT_VPID_CAP (see Appendix A.10) to determine whether the processor supports this feature.
4. N is the physical-address width supported by the logical processor. Software can determine a processor's physical-address width by executing CPUID with 80000008H in EAX. The physical-address width is returned in bits 7:0 of EAX.

The EPTP exists only on processors that support the 1-setting of the "enable EPT" VM-execution control.

25.6.12 Virtual-Processor Identifier (VPID)

The **virtual-processor identifier** (VPID) is a 16-bit field. It exists only on processors that support the 1-setting of the "enable VPID" VM-execution control. See Section 29.1 for details regarding the use of this field.

25.6.13 Controls for PAUSE-Loop Exiting

On processors that support the 1-setting of the "PAUSE-loop exiting" VM-execution control, the VM-execution control fields include the following 32-bit fields:

- **PLE_Gap**. Software can configure this field as an upper bound on the amount of time between two successive executions of PAUSE in a loop.
- **PLE_Window**. Software can configure this field as an upper bound on the amount of time a guest is allowed to execute in a PAUSE loop.

These fields measure time based on a counter that runs at the same rate as the timestamp counter (TSC). See Section 26.1.3 for more details regarding PAUSE-loop exiting.

25.6.14 VM-Function Controls

The **VM-function controls** constitute a 64-bit vector that governs use of the VMFUNC instruction in VMX non-root operation. This field is supported only on processors that support the 1-settings of both the "activate secondary controls" primary processor-based VM-execution control and the "enable VM functions" secondary processor-based VM-execution control.

Table 25-10 lists the VM-function controls. See Section 26.5.6 for more details of how these controls affect processor behavior in VMX non-root operation.

Table 25-10. Definitions of VM-Function Controls

Bit Position(s)	Name	Description
0	EPTP switching	The EPTP-switching VM function changes the EPT pointer to a value chosen from the EPTP list. See Section 26.5.6.3.

All other bits in this field are reserved to 0. Software should consult the VMX capability MSR IA32_VMX_VMFUNC (see Appendix A.11) to determine which bits are reserved. Failure to clear reserved bits causes subsequent VM entries to fail (see Section 27.2.1.1).

Processors that support the 1-setting of the "EPTP switching" VM-function control also support a 64-bit field called the **EPTP-list address**. This field contains the physical address of the 4-KByte **EPTP list**. The EPTP list comprises 512 8-Byte entries (each an EPTP value) and is used by the EPTP-switching VM function (see Section 26.5.6.3).

25.6.15 VMCS Shadowing Bitmap Addresses

On processors that support the 1-setting of the "VMCS shadowing" VM-execution control, the VM-execution control fields include the 64-bit physical addresses of the **VMREAD bitmap** and the **VMWRITE bitmap**. Each bitmap is 4 KBytes in size and thus contains 32 KBits. The addresses are the **VMREAD-bitmap address** and the **VMWRITE-bitmap address**.

If the "VMCS shadowing" VM-execution control is 1, executions of VMREAD and VMWRITE may consult these bitmaps (see Section 25.10 and Section 31.3).

25.6.16 ENCLS-Exiting Bitmap

The **ENCLS-exiting bitmap** is a 64-bit field. If the "enable ENCLS exiting" VM-execution control is 1, execution of ENCLS causes a VM exit if the bit in this field corresponding to the value of EAX is 1. If the bit is 0, the instruction executes normally. See Section 26.1.3 for more information.

25.6.17 ENCLV-Exiting Bitmap

The **ENCLV-exiting bitmap** is a 64-bit field. If the "enable ENCLV exiting" VM-execution control is 1, execution of ENCLV causes a VM exit if the bit in this field corresponding to the value of EAX is 1. If the bit is 0, the instruction executes normally. See Section 26.1.3 for more information.

25.6.18 PCONFIG-Exiting Bitmap

The **PCONFIG-exiting bitmap** is a 64-bit field. If the "enable PCONFIG" VM-execution control is 1, execution of PCONFIG causes a VM exit if the bit in this field corresponding to the value of EAX is 1. If the control is 0, any execution of PCONFIG causes a #UD. See Section 26.1.3 for more information.

25.6.19 Control Field for Page-Modification Logging

The **PML address** is a 64-bit field. It is the 4-KByte aligned address of the **page-modification log**. The page-modification log consists of 512 64-bit entries. It is used for the page-modification logging feature. Details of the page-modification logging are given in Section 29.3.6.

If the "enable PML" VM-execution control is 1, VM entry ensures that the PML address is 4-KByte aligned. The PML address exists only on processors that support the 1-setting of the "enable PML" VM-execution control.

25.6.20 Controls for Virtualization Exceptions

On processors that support the 1-setting of the "EPT-violation #VE" VM-execution control, the VM-execution control fields include the following:

- **Virtualization-exception information address** (64 bits). This field contains the physical address of the **virtualization-exception information area**. When a logical processor encounters a virtualization exception, it saves virtualization-exception information at the virtualization-exception information address; see Section 26.5.7.2.
- **EPTP index** (16 bits). When an EPT violation causes a virtualization exception, the processor writes the value of this field to the virtualization-exception information area. The EPTP-switching VM function updates this field (see Section 26.5.6.3).

25.6.21 XSS-Exiting Bitmap

On processors that support the 1-setting of the "enable XSAVES/XRSTORS" VM-execution control, the VM-execution control fields include a 64-bit **XSS-exiting bitmap**. If the "enable XSAVES/XRSTORS" VM-execution control is 1, executions of XSAVES and XRSTORS may consult this bitmap (see Section 26.1.3 and Section 26.3).

25.6.22 Sub-Page-Permission-Table Pointer (SPPTP)

If the sub-page write-permission feature of EPT is enabled, EPT write permissions may be determined at a 128-byte granularity (see Section 29.3.4). These permissions are determined using a hierarchy of sub-page-permission structures in memory.

The root of this hierarchy is referenced by a VM-execution control field called the **sub-page-permission-table pointer** (SPPTP). The SPPTP contains the address of the base of the root SPP table (see Section 29.3.4.2). The format of this field is shown in Table 25-9.

Table 25-11. Format of Sub-Page-Permission-Table Pointer

Bit Position(s)	Field
11:0	Reserved
N–1:12	Bits N–1:12 of the physical address of the 4-KByte aligned root SPP table
63:N[1]	Reserved

NOTES:

1. N is the processor's physical-address width. Software can determine this width by executing CPUID with 80000008H in EAX. The physical-address width is returned in bits 7:0 of EAX.

The SPPTP exists only on processors that support the 1-setting of the "sub-page write permissions for EPT" VM-execution control.

25.6.23 Fields Related to Hypervisor-Managed Linear-Address Translation

Two fields are used when the "enable HLAT" VM-execution control is 1, enabling HLAT paging:

- The **hypervisor-managed linear-address translation pointer** (HLAT pointer or HLATP) is used by HLAT paging to locate and access the first paging structure used for linear-address translation (see Section 4.5). The format of this field is shown in Table 25-12.

Table 25-12. Format of Hypervisor-Managed Linear-Address Translation Pointer

Bit Position(s)	Field
2:0	Reserved
3 (PWT)	Page-level write-through; indirectly determines the memory type used to access the first HLAT paging structure during linear-address translation.
4 (PCD)	Page-level cache disable; indirectly determines the memory type used to access the first HLAT paging structure during linear-address translation.
11:5	Reserved
N–1:12	Guest-physical address (4KB-aligned) of the first HLAT paging structure during linear-address translation.[1]
63:N	Reserved

NOTES:

1. N is the physical-address width supported by the logical processor. Software can determine a processor's physical-address width by executing CPUID with 80000008H in EAX. The physical-address width is returned in bits 7:0 of EAX.

- The HLAT prefix size. The value of this field determines which linear address are subject to HLAT paging. See Section 4.5.1.

These fields exist only on processors that support the 1-setting of the "enable HLAT" VM-execution control.

25.6.24 Fields Related to PASID Translation

Two 64-bit VM-execution control fields are used when the "PASID translation" VM-execution control is 1, enabling translation of PASIDs for executions of ENQCMD and ENQCMDS: the **low PASID directory address** and the **high PASID directory address**. These are the physical addresses of the low PASID directory and the high PASID directory, respectively. These fields exist only on processors that support the 1-setting of the "PASID translation" VM-execution control.

See Section 26.5.8 for information on the PASID-translation process for ENQCMD and ENQCMDS.

25.7 VM-EXIT CONTROL FIELDS

The VM-exit control fields govern the behavior of VM exits. They are discussed in Section 25.7.1 and Section 25.7.2.

25.7.1 VM-Exit Controls

The VM-exit controls constitute two vectors that govern the basic operation of VM exits. These are the **primary VM-exit controls** (32 bits) and the **secondary VM-exits controls** (64 bits).

Table 25-13 lists the primary VM-exit controls. See Chapter 28 for complete details of how these controls affect VM exits.

Table 25-13. Definitions of Primary VM-Exit Controls

Bit Position(s)	Name	Description
2	Save debug controls	This control determines whether DR7 and the IA32_DEBUGCTL MSR are saved on VM exit. The first processors to support the virtual-machine extensions supported only the 1-setting of this control.
9	Host address-space size	On processors that support Intel 64 architecture, this control determines whether a logical processor is in 64-bit mode after the next VM exit. Its value is loaded into CS.L, IA32_EFER.LME, and IA32_EFER.LMA on every VM exit.[1] This control must be 0 on processors that do not support Intel 64 architecture.
12	Load IA32_PERF_GLOBAL_CTRL	This control determines whether the IA32_PERF_GLOBAL_CTRL MSR is loaded on VM exit.
15	Acknowledge interrupt on exit	This control affects VM exits due to external interrupts: ▪ If such a VM exit occurs and this control is 1, the logical processor acknowledges the interrupt controller, acquiring the interrupt's vector. The vector is stored in the VM-exit interruption-information field, which is marked valid. ▪ If such a VM exit occurs and this control is 0, the interrupt is not acknowledged and the VM-exit interruption-information field is marked invalid.
18	Save IA32_PAT	This control determines whether the IA32_PAT MSR is saved on VM exit.
19	Load IA32_PAT	This control determines whether the IA32_PAT MSR is loaded on VM exit.
20	Save IA32_EFER	This control determines whether the IA32_EFER MSR is saved on VM exit.
21	Load IA32_EFER	This control determines whether the IA32_EFER MSR is loaded on VM exit.
22	Save VMX-preemption timer value	This control determines whether the value of the VMX-preemption timer is saved on VM exit.
23	Clear IA32_BNDCFGS	This control determines whether the IA32_BNDCFGS MSR is cleared on VM exit.
24	Conceal VMX from PT	If this control is 1, Intel Processor Trace does not produce a paging information packet (PIP) on a VM exit or a VMCS packet on an SMM VM exit (see Chapter 33).
25	Clear IA32_RTIT_CTL	This control determines whether the IA32_RTIT_CTL MSR is cleared on VM exit.
26	Clear IA32_LBR_CTL	This control determines whether the IA32_LBR_CTL MSR is cleared on VM exit.
27	Clear UINV	This control determines whether UINV is cleared on VM exit.
28	Load CET state	This control determines whether CET-related MSRs and SSP are loaded on VM exit.
29	Load PKRS	This control determines whether the IA32_PKRS MSR is loaded on VM exit.
30	Save IA32_PERF_GLOBAL_CTL	This control determines whether the IA32_PERF_GLOBAL_CTL MSR is saved on VM exit.
31	Activate secondary controls	This control determines whether the secondary VM-exit controls are used. If this control is 0, the logical processor operates as if all the secondary VM-exit controls were also 0.

NOTES:

1. Since the Intel 64 architecture specifies that IA32_EFER.LMA is always set to the logical-AND of CR0.PG and IA32_EFER.LME, and since CR0.PG is always 1 in VMX root operation, IA32_EFER.LMA is always identical to IA32_EFER.LME in VMX root operation.

All other bits in this field are reserved, some to 0 and some to 1. Software should consult the VMX capability MSRs IA32_VMX_EXIT_CTLS and IA32_VMX_TRUE_EXIT_CTLS (see Appendix A.4) to determine how it should set the reserved bits. Failure to set reserved bits properly causes subsequent VM entries to fail (see Section 27.2.1.2).

The first processors to support the virtual-machine extensions supported only the 1-settings of bits 0–8, 10, 11, 13, 14, 16, and 17. The VMX capability MSR IA32_VMX_EXIT_CTLS always reports that these bits must be 1. Logical processors that support the 0-settings of any of these bits will support the VMX capability MSR

IA32_VMX_TRUE_EXIT_CTLS MSR, and software should consult this MSR to discover support for the 0-settings of these bits. Software that is not aware of the functionality of any one of these bits should set that bit to 1.

Bit 31 of the primary processor-based VM-exit controls determines whether the secondary VM-exit controls are used. If that bit is 0, VM entry and VMX non-root operation function as if all the secondary VM-exit controls were 0. Processors that support only the 0-setting of bit 31 of the primary VM-exit controls do not support the secondary VM-exit controls.

Currently, no secondary VM-exit controls are defined, and all bits in this field are reserved to 0. Software should consult the VMX capability MSR IA32_VMX_EXIT_CTLS2 (see Appendix A.4.2) to determine which bits may be set to 1. Failure to clear reserved bits causes subsequent VM entries to fail (see Section 27.2.1.2).

25.7.2 VM-Exit Controls for MSRs

A VMM may specify lists of MSRs to be stored and loaded on VM exits. The following VM-exit control fields determine how MSRs are stored on VM exits:

- **VM-exit MSR-store count** (32 bits). This field specifies the number of MSRs to be stored on VM exit. It is recommended that this count not exceed 512.[1] Otherwise, unpredictable processor behavior (including a machine check) may result during VM exit.
- **VM-exit MSR-store address** (64 bits). This field contains the physical address of the VM-exit MSR-store area. The area is a table of entries, 16 bytes per entry, where the number of entries is given by the VM-exit MSR-store count. The format of each entry is given in Table 25-14. If the VM-exit MSR-store count is not zero, the address must be 16-byte aligned.

Table 25-14. Format of an MSR Entry

Bit Position(s)	Contents
31:0	MSR index
63:32	Reserved
127:64	MSR data

See Section 28.4 for how this area is used on VM exits.

The following VM-exit control fields determine how MSRs are loaded on VM exits:

- **VM-exit MSR-load count** (32 bits). This field contains the number of MSRs to be loaded on VM exit. It is recommended that this count not exceed 512. Otherwise, unpredictable processor behavior (including a machine check) may result during VM exit.[2]
- **VM-exit MSR-load address** (64 bits). This field contains the physical address of the VM-exit MSR-load area. The area is a table of entries, 16 bytes per entry, where the number of entries is given by the VM-exit MSR-load count (see Table 25-14). If the VM-exit MSR-load count is not zero, the address must be 16-byte aligned.

See Section 28.6 for how this area is used on VM exits.

25.8 VM-ENTRY CONTROL FIELDS

The VM-entry control fields govern the behavior of VM entries. They are discussed in Sections 25.8.1 through 25.8.3.

1. Future implementations may allow more MSRs to be stored reliably. Software should consult the VMX capability MSR IA32_VMX_MISC to determine the number supported (see Appendix A.6).
2. Future implementations may allow more MSRs to be loaded reliably. Software should consult the VMX capability MSR IA32_VMX_MISC to determine the number supported (see Appendix A.6).

25.8.1 VM-Entry Controls

The **VM-entry controls** constitute a 32-bit vector that governs the basic operation of VM entries. Table 25-15 lists the controls supported. See Chapter 25 for how these controls affect VM entries.

Table 25-15. Definitions of VM-Entry Controls

Bit Position(s)	Name	Description
2	Load debug controls	This control determines whether DR7 and the IA32_DEBUGCTL MSR are loaded on VM entry. The first processors to support the virtual-machine extensions supported only the 1-setting of this control.
9	IA-32e mode guest	On processors that support Intel 64 architecture, this control determines whether the logical processor is in IA-32e mode after VM entry. Its value is loaded into IA32_EFER.LMA as part of VM entry.[1] This control must be 0 on processors that do not support Intel 64 architecture.
10	Entry to SMM	This control determines whether the logical processor is in system-management mode (SMM) after VM entry. This control must be 0 for any VM entry from outside SMM.
11	Deactivate dual-monitor treatment	If set to 1, the default treatment of SMIs and SMM is in effect after the VM entry (see Section 32.15.7). This control must be 0 for any VM entry from outside SMM.
13	Load IA32_PERF_GLOBAL_CTRL	This control determines whether the IA32_PERF_GLOBAL_CTRL MSR is loaded on VM entry.
14	Load IA32_PAT	This control determines whether the IA32_PAT MSR is loaded on VM entry.
15	Load IA32_EFER	This control determines whether the IA32_EFER MSR is loaded on VM entry.
16	Load IA32_BNDCFGS	This control determines whether the IA32_BNDCFGS MSR is loaded on VM entry.
17	Conceal VMX from PT	If this control is 1, Intel Processor Trace does not produce a paging information packet (PIP) on a VM entry or a VMCS packet on a VM entry that returns from SMM (see Chapter 33).
18	Load IA32_RTIT_CTL	This control determines whether the IA32_RTIT_CTL MSR is loaded on VM entry.
19	Load UINV	This control determines whether UINV is loaded on VM entry.
20	Load CET state	This control determines whether CET-related MSRs and SSP are loaded on VM entry.
21	Load guest IA32_LBR_CTL	This control determines whether the IA32_LBR_CTL MSR is loaded on VM entry.
22	Load PKRS	This control determines whether the IA32_PKRS MSR is loaded on VM entry.

NOTES:

1. Bit 5 of the IA32_VMX_MISC MSR is read as 1 on any logical processor that supports the 1-setting of the "unrestricted guest" VM-execution control. If it is read as 1, every VM exit stores the value of IA32_EFER.LMA into the "IA-32e mode guest" VM-entry control (see Section 28.2).

All other bits in this field are reserved, some to 0 and some to 1. Software should consult the VMX capability MSRs IA32_VMX_ENTRY_CTLS and IA32_VMX_TRUE_ENTRY_CTLS (see Appendix A.5) to determine how it should set the reserved bits. Failure to set reserved bits properly causes subsequent VM entries to fail (see Section 27.2.1.3).

The first processors to support the virtual-machine extensions supported only the 1-settings of bits 0–8 and 12. The VMX capability MSR IA32_VMX_ENTRY_CTLS always reports that these bits must be 1. Logical processors that support the 0-settings of any of these bits will support the VMX capability MSR IA32_VMX_TRUE_ENTRY_CTLS MSR, and software should consult this MSR to discover support for the 0-settings of these bits. Software that is not aware of the functionality of any one of these bits should set that bit to 1.

25.8.2 VM-Entry Controls for MSRs

A VMM may specify a list of MSRs to be loaded on VM entries. The following VM-entry control fields manage this functionality:

- **VM-entry MSR-load count** (32 bits). This field contains the number of MSRs to be loaded on VM entry. It is recommended that this count not exceed 512. Otherwise, unpredictable processor behavior (including a machine check) may result during VM entry.[1]
- **VM-entry MSR-load address** (64 bits). This field contains the physical address of the VM-entry MSR-load area. The area is a table of entries, 16 bytes per entry, where the number of entries is given by the VM-entry MSR-load count. The format of entries is described in Table 25-14. If the VM-entry MSR-load count is not zero, the address must be 16-byte aligned.

See Section 27.4 for details of how this area is used on VM entries.

25.8.3 VM-Entry Controls for Event Injection

VM entry can be configured to conclude by delivering an event through the IDT (after all guest state and MSRs have been loaded). This process is called **event injection** and is controlled by the following three VM-entry control fields:

- **VM-entry interruption-information field** (32 bits). This field provides details about the event to be injected. Table 25-16 describes the field.

Table 25-16. Format of the VM-Entry Interruption-Information Field

Bit Position(s)	Content
7:0	Vector of interrupt or exception
10:8	Interruption type: 0: External interrupt 1: Reserved 2: Non-maskable interrupt (NMI) 3: Hardware exception (e.g,. #PF) 4: Software interrupt (INT *n*) 5: Privileged software exception (INT1) 6: Software exception (INT3 or INTO) 7: Other event
11	Deliver error code (0 = do not deliver; 1 = deliver)
30:12	Reserved
31	Valid

  — The **vector** (bits 7:0) determines which entry in the IDT is used or which other event is injected.

  — The **interruption type** (bits 10:8) determines details of how the injection is performed. In general, a VMM should use the type hardware exception for all exceptions **other than** the following:

    - breakpoint exceptions (#BP; a VMM should use the type software exception);
    - overflow exceptions (#OF a VMM should use the use type software exception); and
    - those debug exceptions (#DB) that are generated by INT1 (a VMM should use the use type privileged software exception).[2]

    The type **other event** is used for injection of events that are not delivered through the IDT.[3]

1. Future implementations may allow more MSRs to be loaded reliably. Software should consult the VMX capability MSR IA32_VMX_MISC to determine the number supported (see Appendix A.6).
2. The type hardware exception should be used for all other debug exceptions.
3. INT1 and INT3 refer to the instructions with opcodes F1 and CC, respectively, and not to INT *n* with values 1 or 3 for *n*.

— For exceptions, the **deliver-error-code bit** (bit 11) determines whether delivery pushes an error code on the guest stack.

— VM entry injects an event if and only if the **valid bit** (bit 31) is 1. The valid bit in this field is cleared on every VM exit (see Section 28.2).

- **VM-entry exception error code** (32 bits). This field is used if and only if the valid bit (bit 31) and the deliver-error-code bit (bit 11) are both set in the VM-entry interruption-information field.
- **VM-entry instruction length** (32 bits). For injection of events whose type is software interrupt, software exception, or privileged software exception, this field is used to determine the value of RIP that is pushed on the stack.

See Section 27.6 for details regarding the mechanics of event injection, including the use of the interruption type and the VM-entry instruction length.

VM exits clear the valid bit (bit 31) in the VM-entry interruption-information field.

25.9 VM-EXIT INFORMATION FIELDS

The VMCS contains a section of fields that contain information about the most recent VM exit.

On some processors, attempts to write to these fields with VMWRITE fail (see "VMWRITE—Write Field to Virtual-Machine Control Structure" in Chapter 31).[1]

25.9.1 Basic VM-Exit Information

The following VM-exit information fields provide basic information about a VM exit:

- **Exit reason** (32 bits). This field encodes the reason for the VM exit and has the structure given in Table 25-17.

Table 25-17. Format of Exit Reason

Bit Position(s)	Contents
15:0	Basic exit reason
16	Always cleared to 0
26:17	Not currently defined
27	A VM exit saves this bit as 1 to indicate that the VM exit was incident to enclave mode.
28	Pending MTF VM exit
29	VM exit from VMX root operation
30	Not currently defined
31	VM-entry failure (0 = true VM exit; 1 = VM-entry failure)

— Bits 15:0 provide basic information about the cause of the VM exit (if bit 31 is clear) or of the VM-entry failure (if bit 31 is set). Appendix C enumerates the basic exit reasons.

— Bit 16 is always cleared to 0.

— Bit 27 is set to 1 if the VM exit occurred while the logical processor was in enclave mode.

A VM exit also sets this bit if it is incident to delivery of an event injected by VM entry and the guest interruptibility-state field indicates an enclave interrupt (bit 4 of the field is 1). See Section 28.2.1 for details.

1. Software can discover whether these fields can be written by reading the VMX capability MSR IA32_VMX_MISC (see Appendix A.6).

  - Bit 28 is set only by an SMM VM exit (see Section 32.15.2) that took priority over an MTF VM exit (see Section 26.5.2) that would have occurred had the SMM VM exit not occurred. See Section 32.15.2.3.
  - Bit 29 is set if and only if the processor was in VMX root operation at the time the VM exit occurred. This can happen only for SMM VM exits. See Section 32.15.2.
  - Because some VM-entry failures load processor state from the host-state area (see Section 27.8), software must be able to distinguish such cases from true VM exits. Bit 31 is used for that purpose.
- **Exit qualification** (64 bits; 32 bits on processors that do not support Intel 64 architecture). This field contains additional information about the cause of VM exits due to the following: debug exceptions; page-fault exceptions; start-up IPIs (SIPIs); task switches; INVEPT; INVLPG;INVVPID; LGDT; LIDT; LLDT; LTR; SGDT; SIDT; SLDT; STR; VMCLEAR; VMPTRLD; VMPTRST; VMREAD; VMWRITE; VMXON; XRSTORS; XSAVES; control-register accesses; MOV DR; I/O instructions; and MWAIT. The format of the field depends on the cause of the VM exit. See Section 28.2.1 for details.
- **Guest-linear address** (64 bits; 32 bits on processors that do not support Intel 64 architecture). This field is used in the following cases:
  - VM exits due to attempts to execute LMSW with a memory operand.
  - VM exits due to attempts to execute INS or OUTS.
  - VM exits due to system-management interrupts (SMIs) that arrive immediately after retirement of I/O instructions.
  - Certain VM exits due to EPT violations

  See Section 28.2.1 and Section 32.15.2.3 for details of when and how this field is used.
- **Guest-physical address** (64 bits). This field is used by VM exits due to EPT violations and EPT misconfigurations. See Section 28.2.1 for details of when and how this field is used.

25.9.2 Information for VM Exits Due to Vectored Events

Event-specific information is provided for VM exits due to the following vectored events: exceptions (including those generated by the instructions INT3, INTO, INT1, BOUND, UD0, UD1, and UD2); external interrupts that occur while the "acknowledge interrupt on exit" VM-exit control is 1; and non-maskable interrupts (NMIs). This information is provided in the following fields:

- **VM-exit interruption information** (32 bits). This field receives basic information associated with the event causing the VM exit. Table 25-18 describes this field.

Table 25-18. Format of the VM-Exit Interruption-Information Field

Bit Position(s)	Content
7:0	Vector of interrupt or exception
10:8	Interruption type: 0: External interrupt 1: Not used 2: Non-maskable interrupt (NMI) 3: Hardware exception 4: Not used 5: Privileged software exception 6: Software exception 7: Not used
11	Error code valid (0 = invalid; 1 = valid)
12	NMI unblocking due to IRET
30:13	Not currently defined
31	Valid

- **VM-exit interruption error code** (32 bits). For VM exits caused by hardware exceptions that would have delivered an error code on the stack, this field receives that error code.

Section 28.2.2 provides details of how these fields are saved on VM exits.

25.9.3 Information for VM Exits That Occur During Event Delivery

Additional information is provided for VM exits that occur during event delivery in VMX non-root operation.[1] This information is provided in the following fields:

- **IDT-vectoring information** (32 bits). This field receives basic information associated with the event that was being delivered when the VM exit occurred. Table 25-19 describes this field.

Table 25-19. Format of the IDT-Vectoring Information Field

Bit Position(s)	Content
7:0	Vector of interrupt or exception
10:8	Interruption type: 0: External interrupt 1: Not used 2: Non-maskable interrupt (NMI) 3: Hardware exception 4: Software interrupt 5: Privileged software exception 6: Software exception 7: Not used
11	Error code valid (0 = invalid; 1 = valid)
30:12	Not currently defined
31	Valid

- **IDT-vectoring error code** (32 bits). For VM exits the occur during delivery of hardware exceptions that would have delivered an error code on the stack, this field receives that error code.

See Section 28.2.4 provides details of how these fields are saved on VM exits.

25.9.4 Information for VM Exits Due to Instruction Execution

The following fields are used for VM exits caused by attempts to execute certain instructions in VMX non-root operation:

- **VM-exit instruction length** (32 bits). For VM exits resulting from instruction execution, this field receives the length in bytes of the instruction whose execution led to the VM exit.[2] See Section 28.2.5 for details of when and how this field is used.
- **VM-exit instruction information** (32 bits). This field is used for VM exits due to attempts to execute INS, INVEPT, INVVPID, LIDT, LGDT, LLDT, LTR, OUTS, SIDT, SGDT, SLDT, STR, VMCLEAR, VMPTRLD, VMPTRST, VMREAD, VMWRITE, or VMXON.[3] The format of the field depends on the cause of the VM exit. See Section 28.2.5 for details.

The following fields (64 bits each; 32 bits on processors that do not support Intel 64 architecture) are used only for VM exits due to SMIs that arrive immediately after retirement of I/O instructions. They provide information about that I/O instruction:

1. This includes cases in which the event delivery was caused by event injection as part of VM entry; see Section 27.6.1.2.
2. This field is also used for VM exits that occur during the delivery of a software interrupt or software exception.
3. Whether the processor provides this information on VM exits due to attempts to execute INS or OUTS can be determined by consulting the VMX capability MSR IA32_VMX_BASIC (see Appendix A.1).

- **I/O RCX**. The value of RCX before the I/O instruction started.
- **I/O RSI**. The value of RSI before the I/O instruction started.
- **I/O RDI**. The value of RDI before the I/O instruction started.
- **I/O RIP**. The value of RIP before the I/O instruction started (the RIP that addressed the I/O instruction).

25.9.5 VM-Instruction Error Field

The 32-bit **VM-instruction error field** does not provide information about the most recent VM exit. In fact, it is not modified on VM exits. Instead, it provides information about errors encountered by a non-faulting execution of one of the VMX instructions.

25.10 VMCS TYPES: ORDINARY AND SHADOW

Every VMCS is either an **ordinary VMCS** or a **shadow VMCS**. A VMCS's type is determined by the shadow-VMCS indicator in the VMCS region (this is the value of bit 31 of the first 4 bytes of the VMCS region; see Table 25-1): 0 indicates an ordinary VMCS, while 1 indicates a shadow VMCS. Shadow VMCSs are supported only on processors that support the 1-setting of the "VMCS shadowing" VM-execution control (see Section 25.6.2).

A shadow VMCS differs from an ordinary VMCS in two ways:

- An ordinary VMCS can be used for VM entry but a shadow VMCS cannot. Attempts to perform VM entry when the current VMCS is a shadow VMCS fail (see Section 27.1).
- The VMREAD and VMWRITE instructions can be used in VMX non-root operation to access a shadow VMCS but not an ordinary VMCS. This fact results from the following:
  - If the "VMCS shadowing" VM-execution control is 0, execution of the VMREAD and VMWRITE instructions in VMX non-root operation always cause VM exits (see Section 26.1.3).
  - If the "VMCS shadowing" VM-execution control is 1, execution of the VMREAD and VMWRITE instructions in VMX non-root operation can access the VMCS referenced by the VMCS link pointer (see Section 31.3).
  - If the "VMCS shadowing" VM-execution control is 1, VM entry ensures that any VMCS referenced by the VMCS link pointer is a shadow VMCS (see Section 27.3.1.5).

In VMX root operation, both types of VMCSs can be accessed with the VMREAD and VMWRITE instructions.

Software should not modify the shadow-VMCS indicator in the VMCS region of a VMCS that is active. Doing so may cause the VMCS to become corrupted (see Section 25.11.1). Before modifying the shadow-VMCS indicator, software should execute VMCLEAR for the VMCS to ensure that it is not active.

25.11 SOFTWARE USE OF THE VMCS AND RELATED STRUCTURES

This section details guidelines that software should observe when using a VMCS and related structures. It also provides descriptions of consequences for failing to follow guidelines.

25.11.1 Software Use of Virtual-Machine Control Structures

To ensure proper processor behavior, software should observe certain guidelines when using an active VMCS.

No VMCS should ever be active on more than one logical processor. If a VMCS is to be "migrated" from one logical processor to another, the first logical processor should execute VMCLEAR for the VMCS (to make it inactive on that logical processor and to ensure that all VMCS data are in memory) before the other logical processor executes

VMPTRLD for the VMCS (to make it active on the second logical processor).[1] A VMCS that is made active on more than one logical processor may become **corrupted** (see below).

Software should not modify the shadow-VMCS indicator (see Table 25-1) in the VMCS region of a VMCS that is active. Doing so may cause the VMCS to become corrupted. Before modifying the shadow-VMCS indicator, software should execute VMCLEAR for the VMCS to ensure that it is not active.

Software should use the VMREAD and VMWRITE instructions to access the different fields in the current VMCS (see Section 25.11.2). Software should never access or modify the VMCS data of an active VMCS using ordinary memory operations, in part because the format used to store the VMCS data is implementation-specific and not architecturally defined, and also because a logical processor may maintain some VMCS data of an active VMCS on the processor and not in the VMCS region. The following items detail some of the hazards of accessing VMCS data using ordinary memory operations:

- Any data read from a VMCS with an ordinary memory read does not reliably reflect the state of the VMCS. Results may vary from time to time or from logical processor to logical processor.
- Writing to a VMCS with an ordinary memory write is not guaranteed to have a deterministic effect on the VMCS. Doing so may cause the VMCS to become corrupted (see below).

(Software can avoid these hazards by removing any linear-address mappings to a VMCS region before executing a VMPTRLD for that region and by not remapping it until after executing VMCLEAR for that region.)

If a logical processor leaves VMX operation, any VMCSs active on that logical processor may be corrupted (see below). To prevent such corruption of a VMCS that may be used either after a return to VMX operation or on another logical processor, software should execute VMCLEAR for that VMCS before executing the VMXOFF instruction or removing power from the processor (e.g., as part of a transition to the S3 and S4 power states).

This section has identified operations that may cause a VMCS to become corrupted. These operations may cause the VMCS's data to become undefined. Behavior may be unpredictable if that VMCS used subsequently on any logical processor. The following items detail some hazards of VMCS corruption:

- VM entries may fail for unexplained reasons or may load undesired processor state.
- The processor may not correctly support VMX non-root operation as documented in Chapter 26 and may generate unexpected VM exits.
- VM exits may load undesired processor state, save incorrect state into the VMCS, or cause the logical processor to transition to a shutdown state.

25.11.2 VMREAD, VMWRITE, and Encodings of VMCS Fields

Every field of the VMCS is associated with a 32-bit value that is its **encoding**. The encoding is provided in an operand to VMREAD and VMWRITE when software wishes to read or write that field. These instructions fail if given, in 64-bit mode, an operand that sets an encoding bit beyond bit 32. See Chapter 31 for a description of these instructions.

The structure of the 32-bit encodings of the VMCS components is determined principally by the width of the fields and their function in the VMCS. See Table 25-20.

Table 25-20. Structure of VMCS Component Encoding

Bit Position(s)	Contents
0	Access type (0 = full; 1 = high); must be full for 16-bit, 32-bit, and natural-width fields
9:1	Index

1. As noted in Section 25.1, execution of the VMPTRLD instruction makes a VMCS is active. In addition, VM entry makes active any shadow VMCS referenced by the VMCS link pointer in the current VMCS. If a shadow VMCS is made active by VM entry, it is necessary to execute VMCLEAR for that VMCS before allowing that VMCS to become active on another logical processor.

Table 25-20. Structure of VMCS Component Encoding (Contd.)

Bit Position(s)	Contents
11:10	Type: 0: control 1: VM-exit information 2: guest state 3: host state
12	Reserved (must be 0)
14:13	Width: 0: 16-bit 1: 64-bit 2: 32-bit 3: natural-width
31:15	Reserved (must be 0)

The following items detail the meaning of the bits in each encoding:

- **Field width.** Bits 14:13 encode the width of the field.
  - A value of 0 indicates a 16-bit field.
  - A value of 1 indicates a 64-bit field.
  - A value of 2 indicates a 32-bit field.
  - A value of 3 indicates a **natural-width** field. Such fields have 64 bits on processors that support Intel 64 architecture and 32 bits on processors that do not.

  Fields whose encodings use value 1 are specially treated to allow 32-bit software access to all 64 bits of the field. Such access is allowed by defining, for each such field, an encoding that allows direct access to the high 32 bits of the field. See below.
- **Field type.** Bits 11:10 encode the type of VMCS field: control, guest-state, host-state, or VM-exit information. (The last category also includes the VM-instruction error field.)
- **Index.** Bits 9:1 distinguish components with the same field width and type.
- **Access type.** Bit 0 must be 0 for all fields except for 64-bit fields (those with field-width 1; see above). A VMREAD or VMWRITE using an encoding with this bit cleared to 0 accesses the entire field. For a 64-bit field with field-width 1, a VMREAD or VMWRITE using an encoding with this bit set to 1 accesses only the high 32 bits of the field.

Appendix B gives the encodings of all fields in the VMCS.

The following describes the operation of VMREAD and VMWRITE based on processor mode, VMCS-field width, and access type:

- 16-bit fields:
  - A VMREAD returns the value of the field in bits 15:0 of the destination operand; other bits of the destination operand are cleared to 0.
  - A VMWRITE writes the value of bits 15:0 of the source operand into the VMCS field; other bits of the source operand are not used.
- 32-bit fields:
  - A VMREAD returns the value of the field in bits 31:0 of the destination operand; in 64-bit mode, bits 63:32 of the destination operand are cleared to 0.
  - A VMWRITE writes the value of bits 31:0 of the source operand into the VMCS field; in 64-bit mode, bits 63:32 of the source operand are not used.
- 64-bit fields and natural-width fields using the full access type outside IA-32e mode.

  - A VMREAD returns the value of bits 31:0 of the field in its destination operand; bits 63:32 of the field are ignored.
  - A VMWRITE writes the value of its source operand to bits 31:0 of the field and clears bits 63:32 of the field.
- 64-bit fields and natural-width fields using the full access type in 64-bit mode (only on processors that support Intel 64 architecture).
  - A VMREAD returns the value of the field in bits 63:0 of the destination operand
  - A VMWRITE writes the value of bits 63:0 of the source operand into the VMCS field.
- 64-bit fields using the high access type.
  - A VMREAD returns the value of bits 63:32 of the field in bits 31:0 of the destination operand; in 64-bit mode, bits 63:32 of the destination operand are cleared to 0.
  - A VMWRITE writes the value of bits 31:0 of the source operand to bits 63:32 of the field; in 64-bit mode, bits 63:32 of the source operand are not used.

Software seeking to read a 64-bit field outside IA-32e mode can use VMREAD with the full access type (reading bits 31:0 of the field) and VMREAD with the high access type (reading bits 63:32 of the field); the order of the two VMREAD executions is not important. Software seeking to modify a 64-bit field outside IA-32e mode should first use VMWRITE with the full access type (establishing bits 31:0 of the field while clearing bits 63:32) and then use VMWRITE with the high access type (establishing bits 63:32 of the field).

25.11.3 Initializing a VMCS

Software should initialize fields in a VMCS (using VMWRITE) before using the VMCS for VM entry. Failure to do so may result in unpredictable behavior; for example, a VM entry may fail for unexplained reasons, or a successful transition (VM entry or VM exit) may load processor state with unexpected values.

It is not necessary to initialize fields that the logical processor will not use. (For example, it is not necessary to initialize the MSR-bitmap address if the "use MSR bitmaps" VM-execution control is 0.)

A processor maintains some VMCS information that cannot be modified with the VMWRITE instruction; this includes a VMCS's launch state (see Section 25.1). Such information may be stored in the VMCS data portion of a VMCS region. Because the format of this information is implementation-specific, there is no way for software to know, when it first allocates a region of memory for use as a VMCS region, how the processor will determine this information from the contents of the memory region.

In addition to its other functions, the VMCLEAR instruction initializes any implementation-specific information in the VMCS region referenced by its operand. To avoid the uncertainties of implementation-specific behavior, software should execute VMCLEAR on a VMCS region before making the corresponding VMCS active with VMPTRLD for the first time. (Figure 25-1 illustrates how execution of VMCLEAR puts a VMCS into a well-defined state.)

The following software usage is consistent with these limitations:

- VMCLEAR should be executed for a VMCS before it is used for VM entry for the first time.
- VMLAUNCH should be used for the first VM entry using a VMCS after VMCLEAR has been executed for that VMCS.
- VMRESUME should be used for any subsequent VM entry using a VMCS (until the next execution of VMCLEAR for the VMCS).

It is expected that, in general, VMRESUME will have lower latency than VMLAUNCH. Since "migrating" a VMCS from one logical processor to another requires use of VMCLEAR (see Section 25.11.1), which sets the launch state of the VMCS to "clear", such migration requires the next VM entry to be performed using VMLAUNCH. Software developers can avoid the performance cost of increased VM-entry latency by avoiding unnecessary migration of a VMCS from one logical processor to another.

25.11.4 Software Access to Related Structures

In addition to data in the VMCS region itself, VMX non-root operation can be controlled by data structures that are referenced by pointers in a VMCS (for example, the I/O bitmaps). While the pointers to these data structures are

parts of the VMCS, the data structures themselves are not. They are not accessible using VMREAD and VMWRITE but by ordinary memory writes.

Software should ensure that each such data structure is modified only when no logical processor with a current VMCS that references it is in VMX non-root operation. Doing otherwise may lead to unpredictable behavior (including behaviors identified in Section 25.11.1). Exceptions are made for the following data structures (subject to detailed discussion in the sections indicated): EPT paging structures and the data structures used to locate SPP vectors (Section 29.4.3); the virtual-APIC page (Section 30.1); the posted interrupt descriptor (Section 30.6); and the virtualization-exception information area (Section 26.5.7.2).

25.11.5 VMXON Region

Before executing VMXON, software allocates a region of memory (called the VMXON region)[1] that the logical processor uses to support VMX operation. The physical address of this region (the VMXON pointer) is provided in an operand to VMXON. The VMXON pointer is subject to the limitations that apply to VMCS pointers:

- The VMXON pointer must be 4-KByte aligned (bits 11:0 must be zero).
- The VMXON pointer must not set any bits beyond the processor's physical-address width.[2,3]

Before executing VMXON, software should write the VMCS revision identifier (see Section 25.2) to the VMXON region. (Specifically, it should write the 31-bit VMCS revision identifier to bits 30:0 of the first 4 bytes of the VMXON region; bit 31 should be cleared to 0.) It need not initialize the VMXON region in any other way. Software should use a separate region for each logical processor and should not access or modify the VMXON region of a logical processor between execution of VMXON and VMXOFF on that logical processor. Doing otherwise may lead to unpredictable behavior (including behaviors identified in Section 25.11.1).

1. The amount of memory required for the VMXON region is the same as that required for a VMCS region. This size is implementation specific and can be determined by consulting the VMX capability MSR IA32_VMX_BASIC (see Appendix A.1).
2. Software can determine a processor's physical-address width by executing CPUID with 80000008H in EAX. The physical-address width is returned in bits 7:0 of EAX.
3. If IA32_VMX_BASIC[48] is read as 1, the VMXON pointer must not set any bits in the range 63:32; see Appendix A.1.

CHAPTER 26
VMX NON-ROOT OPERATION

In a virtualized environment using VMX, the guest software stack typically runs on a logical processor in VMX non-root operation. This mode of operation is similar to that of ordinary processor operation outside of the virtualized environment. This chapter describes the differences between VMX non-root operation and ordinary processor operation with special attention to causes of VM exits (which bring a logical processor from VMX non-root operation to root operation). The differences between VMX non-root operation and ordinary processor operation are described in the following sections:

- Section 26.1, "Instructions That Cause VM Exits"
- Section 26.2, "Other Causes of VM Exits"
- Section 26.3, "Changes to Instruction Behavior in VMX Non-Root Operation"
- Section 26.4, "Other Changes in VMX Non-Root Operation"
- Section 26.5, "Features Specific to VMX Non-Root Operation"
- Section 26.6, "Unrestricted Guests"

Chapter 27, "VM Entries," describes the data control structures that govern VMX non-root operation. Chapter 27, "VM Entries," describes the operation of VM entries by which the processor transitions from VMX root operation to VMX non-root operation. Chapter 26, "VMX Non-Root Operation," describes the operation of VM exits by which the processor transitions from VMX non-root operation to VMX root operation.

Chapter 29, "VMX Support for Address Translation," describes two features that support address translation in VMX non-root operation. Chapter 30, "APIC Virtualization and Virtual Interrupts," describes features that support virtualization of interrupts and the Advanced Programmable Interrupt Controller (APIC) in VMX non-root operation.

26.1 INSTRUCTIONS THAT CAUSE VM EXITS

Certain instructions may cause VM exits if executed in VMX non-root operation. Unless otherwise specified, such VM exits are "fault-like," meaning that the instruction causing the VM exit does not execute and no processor state is updated by the instruction. Section 28.1 details architectural state in the context of a VM exit.

Section 26.1.1 defines the prioritization between faults and VM exits for instructions subject to both. Section 26.1.2 identifies instructions that cause VM exits whenever they are executed in VMX non-root operation (and thus can never be executed in VMX non-root operation). Section 26.1.3 identifies instructions that cause VM exits depending on the settings of certain VM-execution control fields (see Section 25.6).

26.1.1 Relative Priority of Faults and VM Exits

The following principles describe the ordering between existing faults and VM exits:

- Certain exceptions have priority over VM exits. These include invalid-opcode exceptions, faults based on privilege level,[1] and general-protection exceptions that are based on checking I/O permission bits in the task-state segment (TSS). For example, execution of RDMSR with CPL = 3 generates a general-protection exception and not a VM exit.[2]
- Faults incurred while fetching instruction operands have priority over VM exits that are conditioned based on the contents of those operands (see LMSW in Section 26.1.3).
- VM exits caused by execution of the INS and OUTS instructions (resulting either because the "unconditional I/O exiting" VM-execution control is 1 or because the "use I/O bitmaps control is 1) have priority over the following faults:

1. These include faults generated by attempts to execute, in virtual-8086 mode, privileged instructions that are not recognized in that mode.
2. MOV DR is an exception to this rule; see Section 26.1.3.

  - A general-protection fault due to the relevant segment (ES for INS; DS for OUTS unless overridden by an instruction prefix) being unusable
  - A general-protection fault due to an offset beyond the limit of the relevant segment
  - An alignment-check exception
- Fault-like VM exits have priority over exceptions other than those mentioned above. For example, RDMSR of a non-existent MSR with CPL = 0 generates a VM exit and not a general-protection exception.

When Section 26.1.2 or Section 26.1.3 (below) identify an instruction execution that may lead to a VM exit, it is assumed that the instruction does not incur a fault that takes priority over a VM exit.

26.1.2 Instructions That Cause VM Exits Unconditionally

The following instructions cause VM exits when they are executed in VMX non-root operation: CPUID, GETSEC,[1] INVD, and XSETBV. This is also true of instructions introduced with VMX, which include: INVEPT, INVVPID, VMCALL,[2] VMCLEAR, VMLAUNCH, VMPTRLD, VMPTRST, VMRESUME, VMXOFF, and VMXON.

26.1.3 Instructions That Cause VM Exits Conditionally

Certain instructions cause VM exits in VMX non-root operation depending on the setting of the VM-execution controls. The following instructions can cause "fault-like" VM exits based on the conditions described:[3]

- **CLTS.** The CLTS instruction causes a VM exit if the bits in position 3 (corresponding to CR0.TS) are set in both the CR0 guest/host mask and the CR0 read shadow.
- **ENCLS.** The ENCLS instruction causes a VM exit if the "enable ENCLS exiting" VM-execution control is 1 and one of the following is true:
  - The value of EAX is less than 63 and the corresponding bit in the ENCLS-exiting bitmap is 1 (see Section 25.6.16).
  - The value of EAX is greater than or equal to 63 and bit 63 in the ENCLS-exiting bitmap is 1.
- **ENCLV.** The ENCLV instruction causes a VM exit if the "enable ENCLV exiting" VM-execution control is 1 and one of the following is true:
  - The value of EAX is less than 63 and the corresponding bit in the ENCLV-exiting bitmap is 1 (see Section 25.6.17).
  - The value of EAX is greater than or equal to 63 and bit 63 in the ENCLV-exiting bitmap is 1.
- **ENQCMD, ENQCMDS.** The behavior of each of these instructions is determined by the setting of the "PASID translation" VM-execution control. If that control is 0, the instruction executes normally. If the control is 1, instruction behavior is modified and may cause a VM exit. See Section 26.5.8.
- **HLT.** The HLT instruction causes a VM exit if the "HLT exiting" VM-execution control is 1.
- **IN, INS/INSB/INSW/INSD, OUT, OUTS/OUTSB/OUTSW/OUTSD.** The behavior of each of these instructions is determined by the settings of the "unconditional I/O exiting" and "use I/O bitmaps" VM-execution controls:
  - If both controls are 0, the instruction executes normally.

---

1. An execution of GETSEC in VMX non-root operation causes a VM exit if CR4.SMXE[Bit 14] = 1 regardless of the value of CPL or RAX. An execution of GETSEC causes an invalid-opcode exception (#UD) if CR4.SMXE[Bit 14] = 0.
2. Under the dual-monitor treatment of SMIs and SMM, executions of VMCALL cause SMM VM exits in VMX root operation outside SMM. See Section 32.15.2.
3. Items in this section may refer to secondary processor-based VM-execution controls and tertiary processor-based VM-execution controls. If bit 31 of the primary processor-based VM-execution controls is 0, VMX non-root operation functions as if the secondary processor-based VM-execution controls were all 0; similarly, if bit 17 of the primary processor-based VM-execution controls is 0, VMX non-root operation functions as if the tertiary processor-based VM-execution controls were all 0. See Section 25.6.2.

— If the "unconditional I/O exiting" VM-execution control is 1 and the "use I/O bitmaps" VM-execution control is 0, the instruction causes a VM exit.

— If the "use I/O bitmaps" VM-execution control is 1, the instruction causes a VM exit if it attempts to access an I/O port corresponding to a bit set to 1 in the appropriate I/O bitmap (see Section 25.6.4). If an I/O operation "wraps around" the 16-bit I/O-port space (accesses ports FFFFH and 0000H), the I/O instruction causes a VM exit (the "unconditional I/O exiting" VM-execution control is ignored if the "use I/O bitmaps" VM-execution control is 1).

See Section 26.1.1 for information regarding the priority of VM exits relative to faults that may be caused by the INS and OUTS instructions.

- **INVLPG.** The INVLPG instruction causes a VM exit if the "INVLPG exiting" VM-execution control is 1.
- **INVPCID.** The INVPCID instruction causes a VM exit if the "INVLPG exiting" and "enable INVPCID" VM-execution controls are both 1.
- **LGDT, LIDT, LLDT, LTR, SGDT, SIDT, SLDT, STR.** These instructions cause VM exits if the "descriptor-table exiting" VM-execution control is 1.
- **LMSW.** In general, the LMSW instruction causes a VM exit if it would write, for any bit set in the low 4 bits of the CR0 guest/host mask, a value different than the corresponding bit in the CR0 read shadow. LMSW never clears bit 0 of CR0 (CR0.PE); thus, LMSW causes a VM exit if either of the following are true:

  — The bits in position 0 (corresponding to CR0.PE) are set in both the CR0 guest/host mask and the source operand, and the bit in position 0 is clear in the CR0 read shadow.

  — For any bit position in the range 3:1, the bit in that position is set in the CR0 guest/host mask and the values of the corresponding bits in the source operand and the CR0 read shadow differ.
- **LOADIWKEY.** The LOADIWKEY instruction causes a VM exit if the "LOADIWKEY exiting" VM-execution control is 1.
- **MONITOR.** The MONITOR instruction causes a VM exit if the "MONITOR exiting" VM-execution control is 1.
- **MOV from CR3.** The MOV from CR3 instruction causes a VM exit if the "CR3-store exiting" VM-execution control is 1. The first processors to support the virtual-machine extensions supported only the 1-setting of this control.
- **MOV from CR8.** The MOV from CR8 instruction causes a VM exit if the "CR8-store exiting" VM-execution control is 1.
- **MOV to CR0.** The MOV to CR0 instruction causes a VM exit unless the value of its source operand matches, for the position of each bit set in the CR0 guest/host mask, the corresponding bit in the CR0 read shadow. (If every bit is clear in the CR0 guest/host mask, MOV to CR0 cannot cause a VM exit.)
- **MOV to CR3.** The MOV to CR3 instruction causes a VM exit unless the "CR3-load exiting" VM-execution control is 0 or the value of its source operand is equal to one of the CR3-target values specified in the VMCS. Only the first *n* CR3-target values are considered, where *n* is the CR3-target count. If the "CR3-load exiting" VM-execution control is 1 and the CR3-target count is 0, MOV to CR3 always causes a VM exit.

  The first processors to support the virtual-machine extensions supported only the 1-setting of the "CR3-load exiting" VM-execution control. These processors always consult the CR3-target controls to determine whether an execution of MOV to CR3 causes a VM exit.
- **MOV to CR4.** The MOV to CR4 instruction causes a VM exit unless the value of its source operand matches, for the position of each bit set in the CR4 guest/host mask, the corresponding bit in the CR4 read shadow.
- **MOV to CR8.** The MOV to CR8 instruction causes a VM exit if the "CR8-load exiting" VM-execution control is 1.
- **MOV DR.** The MOV DR instruction causes a VM exit if the "MOV-DR exiting" VM-execution control is 1. Such VM exits represent an exception to the principles identified in Section 26.1.1 in that they take priority over the following: general-protection exceptions based on privilege level; and invalid-opcode exceptions that occur because CR4.DE=1 and the instruction specified access to DR4 or DR5.
- **MWAIT.** The MWAIT instruction causes a VM exit if the "MWAIT exiting" VM-execution control is 1. If this control is 0, the behavior of the MWAIT instruction may be modified (see Section 26.3).
- **PAUSE.** The behavior of each of this instruction depends on CPL and the settings of the "PAUSE exiting" and "PAUSE-loop exiting" VM-execution controls**:**

  — CPL = 0.

    - If the "PAUSE exiting" and "PAUSE-loop exiting" VM-execution controls are both 0, the PAUSE instruction executes normally.
    - If the "PAUSE exiting" VM-execution control is 1, the PAUSE instruction causes a VM exit (the "PAUSE-loop exiting" VM-execution control is ignored if CPL = 0 and the "PAUSE exiting" VM-execution control is 1).
    - If the "PAUSE exiting" VM-execution control is 0 and the "PAUSE-loop exiting" VM-execution control is 1, the following treatment applies.

      The processor determines the amount of time between this execution of PAUSE and the previous execution of PAUSE at CPL 0. If this amount of time exceeds the value of the VM-execution control field PLE_Gap, the processor considers this execution to be the first execution of PAUSE in a loop. (It also does so for the first execution of PAUSE at CPL 0 after VM entry.)

      Otherwise, the processor determines the amount of time since the most recent execution of PAUSE that was considered to be the first in a loop. If this amount of time exceeds the value of the VM-execution control field PLE_Window, a VM exit occurs.

      For purposes of these computations, time is measured based on a counter that runs at the same rate as the timestamp counter (TSC).

  — CPL > 0.
    - If the "PAUSE exiting" VM-execution control is 0, the PAUSE instruction executes normally.
    - If the "PAUSE exiting" VM-execution control is 1, the PAUSE instruction causes a VM exit.

    The "PAUSE-loop exiting" VM-execution control is ignored if CPL > 0.

- **PCONFIG.** The PCONFIG instruction causes a VM exit if the "enable PCONFIG" VM-execution control is 1 and one of the following is true:
  — The value of EAX is less than 63 and the corresponding bit in the PCONFIG-exiting bitmap is 1 (see Section 25.6.18).
  — The value of EAX is greater than or equal to 63 and bit 63 in the PCONFIG-exiting bitmap is 1.

  If the "enable PCONFIG" VM-execution control is 1 and neither of the previous items hold, the PCONFIG instruction executes normally.
- **RDMSR.** The RDMSR instruction causes a VM exit if any of the following are true:
  — The "use MSR bitmaps" VM-execution control is 0.
  — The value of ECX is not in the ranges 00000000H – 00001FFFH and C0000000H – C0001FFFH.
  — The value of ECX is in the range 00000000H – 00001FFFH and bit *n* in read bitmap for low MSRs is 1, where *n* is the value of ECX.
  — The value of ECX is in the range C0000000H – C0001FFFH and bit *n* in read bitmap for high MSRs is 1, where *n* is the value of ECX & 00001FFFH.

  See Section 25.6.9 for details regarding how these bitmaps are identified.
- **RDPMC.** The RDPMC instruction causes a VM exit if the "RDPMC exiting" VM-execution control is 1.
- **RDRAND.** The RDRAND instruction causes a VM exit if the "RDRAND exiting" VM-execution control is 1.
- **RDSEED.** The RDSEED instruction causes a VM exit if the "RDSEED exiting" VM-execution control is 1.
- **RDTSC.** The RDTSC instruction causes a VM exit if the "RDTSC exiting" VM-execution control is 1.
- **RDTSCP.** The RDTSCP instruction causes a VM exit if the "RDTSC exiting" and "enable RDTSCP" VM-execution controls are both 1.
- **RSM.** The RSM instruction causes a VM exit if executed in system-management mode (SMM).[1]
- **TPAUSE.** The TPAUSE instruction causes a VM exit if the "RDTSC exiting" and "enable user wait and pause" VM-execution controls are both 1.

1. Execution of the RSM instruction outside SMM causes an invalid-opcode exception regardless of whether the processor is in VMX operation. It also does so in VMX root operation in SMM; see Section 32.15.3.

- **UMWAIT.** The UMWAIT instruction causes a VM exit if the "RDTSC exiting" and "enable user wait and pause" VM-execution controls are both 1.
- **VMREAD.** The VMREAD instruction causes a VM exit if any of the following are true:
  - The "VMCS shadowing" VM-execution control is 0.
  - Bits 63:15 (bits 31:15 outside 64-bit mode) of the register source operand are not all 0.
  - Bit *n* in VMREAD bitmap is 1, where *n* is the value of bits 14:0 of the register source operand. See Section 25.6.15 for details regarding how the VMREAD bitmap is identified.

  If the VMREAD instruction does not cause a VM exit, it reads from the VMCS referenced by the VMCS link pointer. See Chapter 31, "VMREAD—Read Field from Virtual-Machine Control Structure" for details of the operation of the VMREAD instruction.
- **VMWRITE.** The VMWRITE instruction causes a VM exit if any of the following are true:
  - The "VMCS shadowing" VM-execution control is 0.
  - Bits 63:15 (bits 31:15 outside 64-bit mode) of the register source operand are not all 0.
  - Bit *n* in VMWRITE bitmap is 1, where *n* is the value of bits 14:0 of the register source operand. See Section 25.6.15 for details regarding how the VMWRITE bitmap is identified.

  If the VMWRITE instruction does not cause a VM exit, it writes to the VMCS referenced by the VMCS link pointer. See Chapter 31, "VMWRITE—Write Field to Virtual-Machine Control Structure" for details of the operation of the VMWRITE instruction.
- **WBINVD.** The WBINVD instruction causes a VM exit if the "WBINVD exiting" VM-execution control is 1.
- **WBNOINVD.** The WBNOINVD instruction causes a VM exit if the "WBINVD exiting" VM-execution control is 1.
- **WRMSR.** The WRMSR instruction causes a VM exit if any of the following are true:
  - The "use MSR bitmaps" VM-execution control is 0.
  - The value of ECX is not in the ranges 00000000H – 00001FFFH and C0000000H – C0001FFFH.
  - The value of ECX is in the range 00000000H – 00001FFFH and bit *n* in write bitmap for low MSRs is 1, where *n* is the value of ECX.
  - The value of ECX is in the range C0000000H – C0001FFFH and bit *n* in write bitmap for high MSRs is 1, where *n* is the value of ECX & 00001FFFH.

  See Section 25.6.9 for details regarding how these bitmaps are identified.
- **XRSTORS.** The XRSTORS instruction causes a VM exit if the "enable XSAVES/XRSTORS" VM-execution control is 1and any bit is set in the logical-AND of the following three values: EDX:EAX, the IA32_XSS MSR, and the XSS-exiting bitmap (see Section 25.6.21).
- **XSAVES.** The XSAVES instruction causes a VM exit if the "enable XSAVES/XRSTORS" VM-execution control is 1 and any bit is set in the logical-AND of the following three values: EDX:EAX, the IA32_XSS MSR, and the XSS-exiting bitmap (see Section 25.6.21).

26.2 OTHER CAUSES OF VM EXITS

In addition to VM exits caused by instruction execution, the following events can cause VM exits:

- **Exceptions.** Exceptions (faults, traps, and aborts) cause VM exits based on the exception bitmap (see Section 25.6.3). If an exception occurs, its vector (in the range 0–31) is used to select a bit in the exception bitmap. If the bit is 1, a VM exit occurs; if the bit is 0, the exception is delivered normally through the guest IDT. This use of the exception bitmap applies also to exceptions generated by the instructions INT1, INT3, INTO, BOUND, UD0, UD1, and UD2.[1]

  Page faults (exceptions with vector 14) are specially treated. When a page fault occurs, a processor consults (1) bit 14 of the exception bitmap; (2) the error code produced with the page fault [PFEC]; (3) the page-fault error-code mask field [PFEC_MASK]; and (4) the page-fault error-code match field [PFEC_MATCH]. It checks if

1. INT1 and INT3 refer to the instructions with opcodes F1 and CC, respectively, and not to INT *n* with value 1 or 3 for n.

PFEC & PFEC_MASK = PFEC_MATCH. If there is equality, the specification of bit 14 in the exception bitmap is followed (for example, a VM exit occurs if that bit is set). If there is inequality, the meaning of that bit is reversed (for example, a VM exit occurs if that bit is clear).

Thus, if software desires VM exits on all page faults, it can set bit 14 in the exception bitmap to 1 and set the page-fault error-code mask and match fields each to 00000000H. If software desires VM exits on no page faults, it can set bit 14 in the exception bitmap to 1, the page-fault error-code mask field to 00000000H, and the page-fault error-code match field to FFFFFFFFH.

- **Triple fault.** A VM exit occurs if the logical processor encounters an exception while attempting to call the double-fault handler and that exception itself does not cause a VM exit due to the exception bitmap. This applies to the case in which the double-fault exception was generated within VMX non-root operation, the case in which the double-fault exception was generated during event injection by VM entry, and to the case in which VM entry is injecting a double-fault exception.
- **External interrupts.** An external interrupt causes a VM exit if the "external-interrupt exiting" VM-execution control is 1. (See Section 26.6 for an exception.) Otherwise, the processor handles the interrupt is normally.[1] (If a logical processor is in the shutdown state or the wait-for-SIPI state, external interrupts are blocked. The processor does handle the interrupt and no VM exit occurs.)
- **Non-maskable interrupts (NMIs).** An NMI causes a VM exit if the "NMI exiting" VM-execution control is 1. Otherwise, it is delivered using descriptor 2 of the IDT. (If a logical processor is in the wait-for-SIPI state, NMIs are blocked. The NMI is not delivered through the IDT and no VM exit occurs.)
- **INIT signals.** INIT signals cause VM exits. A logical processor performs none of the operations normally associated with these events. Such exits do not modify register state or clear pending events as they would outside of VMX operation. (If a logical processor is in the wait-for-SIPI state, INIT signals are blocked. They do not cause VM exits in this case.)
- **Start-up IPIs (SIPIs). SIPIs cause VM exits.** If a logical processor is not in the wait-for-SIPI activity state when a SIPI arrives, no VM exit occurs and the SIPI is discarded. VM exits due to SIPIs do not perform any of the normal operations associated with those events: they do not modify register state as they would outside of VMX operation. (If a logical processor is not in the wait-for-SIPI state, SIPIs are blocked. They do not cause VM exits in this case.)
- **Task switches.** Task switches are not allowed in VMX non-root operation. Any attempt to effect a task switch in VMX non-root operation causes a VM exit. See Section 26.4.2.
- **System-management interrupts (SMIs).** If the logical processor is using the dual-monitor treatment of SMIs and system-management mode (SMM), SMIs cause SMM VM exits. See Section 32.15.2.[2]
- **VMX-preemption timer.** A VM exit occurs when the timer counts down to zero. See Section 26.5.1 for details of operation of the VMX-preemption timer.

  Debug-trap exceptions and higher priority events take priority over VM exits caused by the VMX-preemption timer. VM exits caused by the VMX-preemption timer take priority over VM exits caused by the "NMI-window exiting" VM-execution control and lower priority events.

  These VM exits wake a logical processor from the same inactive states as would a non-maskable interrupt. Specifically, they wake a logical processor from the shutdown state and from the states entered using the HLT and MWAIT instructions. These VM exits do not occur if the logical processor is in the wait-for-SIPI state.

In addition, there are controls that cause VM exits based on the readiness of guest software to receive interrupts:

- If the "interrupt-window exiting" VM-execution control is 1, a VM exit occurs before execution of any instruction if RFLAGS.IF = 1 and there is no blocking of events by STI or by MOV SS (see Table 25-3). Such a VM exit occurs immediately after VM entry if the above conditions are true (see Section 27.7.5).

  Non-maskable interrupts (NMIs) and higher priority events take priority over VM exits caused by this control. VM exits caused by this control take priority over external interrupts and lower priority events.

1. Normal handling usually means delivery through the IDT, but it could also mean treatment of the interrupt as a user-interrupt notification.
2. Under the dual-monitor treatment of SMIs and SMM, SMIs also cause SMM VM exits if they occur in VMX root operation outside SMM. If the processor is using the default treatment of SMIs and SMM, SMIs are delivered as described in Section 32.14.1.

These VM exits wake a logical processor from the same inactive states as would an external interrupt. Specifically, they wake a logical processor from the states entered using the HLT and MWAIT instructions. These VM exits do not occur if the logical processor is in the shutdown state or the wait-for-SIPI state.

- If the "NMI-window exiting" VM-execution control is 1, a VM exit occurs before execution of any instruction if there is no virtual-NMI blocking and there is no blocking of events by MOV SS and no blocking of events by STI (see Table 25-3). Such a VM exit occurs immediately after VM entry if the above conditions are true (see Section 27.7.6).

  VM exits caused by the VMX-preemption timer and higher priority events take priority over VM exits caused by this control. VM exits caused by this control take priority over non-maskable interrupts (NMIs) and lower priority events.

  These VM exits wake a logical processor from the same inactive states as would an NMI. Specifically, they wake a logical processor from the shutdown state and from the states entered using the HLT and MWAIT instructions. These VM exits do not occur if the logical processor is in the wait-for-SIPI state.

26.3 CHANGES TO INSTRUCTION BEHAVIOR IN VMX NON-ROOT OPERATION

The behavior of some instructions is changed in VMX non-root operation. Some of these changes are determined by the settings of certain VM-execution control fields. The following items detail such changes:[1]

- **CLTS.** Behavior of the CLTS instruction is determined by the bits in position 3 (corresponding to CR0.TS) in the CR0 guest/host mask and the CR0 read shadow:
  - If bit 3 in the CR0 guest/host mask is 0, CLTS clears CR0.TS normally (the value of bit 3 in the CR0 read shadow is irrelevant in this case), unless CR0.TS is fixed to 1 in VMX operation (see Section 24.8), in which case CLTS causes a general-protection exception.
  - If bit 3 in the CR0 guest/host mask is 1 and bit 3 in the CR0 read shadow is 0, CLTS completes but does not change the contents of CR0.TS.
  - If the bits in position 3 in the CR0 guest/host mask and the CR0 read shadow are both 1, CLTS causes a VM exit.
- **ENQCMD, ENQCMDS.** Each of these instructions performs a 64-byte enqueue store that includes a PASID value in bits 19:0. For ENQCMD, the PASID is normally the value of IA32_PASID[19:0], while for ENQCMDS, the PASID is normally read from memory.

  The behavior of each of these instructions (and in particular the PASID value used for the enqueue store) is determined by the setting of the "PASID translation" VM-execution control:
  - If the "PASID translation" VM-execution control is 0, the instruction operates normally.
  - If the "PASID translation" VM-execution control is 1, the PASID value used for the enqueue store is determined by the PASID-translation process described in Section 26.5.8. (Note the PASID translation may result in a VM exit, in which case the enqueue store is not performed.)

  An execution of ENQCMD or ENQCMDS performs PASID translation only after checking for conditions that may result in general-protection exception (the check of IA32_PASID.Valid for ENQCMD; the privilege-level check for ENQCMDS), after loading the instruction's source operand from memory, and thus after any faults or VM exits that the loading may cause (e.g., page faults or EPT violations). PASID translation occurs before the actual enqueue store and thus before any faults or VM exits that it may cause.
- **INVPCID.** Behavior of the INVPCID instruction is determined first by the setting of the "enable INVPCID" VM-execution control:
  - If the "enable INVPCID" VM-execution control is 0, INVPCID causes an invalid-opcode exception (#UD). This exception takes priority over any other exception the instruction may incur.

1. Items in this section may refer to secondary processor-based VM-execution controls and tertiary processor-based VM-execution controls. If bit 31 of the primary processor-based VM-execution controls is 0, VMX non-root operation functions as if the secondary processor-based VM-execution controls were all 0; similarly, if bit 17 of the primary processor-based VM-execution controls is 0, VMX non-root operation functions as if the tertiary processor-based VM-execution controls were all 0. See Section 25.6.2.

  - If the "enable INVPCID" VM-execution control is 1, treatment is based on the setting of the "INVLPG exiting" VM-execution control:
    - If the "INVLPG exiting" VM-execution control is 0, INVPCID operates normally.
    - If the "INVLPG exiting" VM-execution control is 1, INVPCID causes a VM exit.
- **IRET.** Behavior of IRET with regard to NMI blocking (see Table 25-3) is determined by the settings of the "NMI exiting" and "virtual NMIs" VM-execution controls:
  - If the "NMI exiting" VM-execution control is 0, IRET operates normally and unblocks NMIs. (If the "NMI exiting" VM-execution control is 0, the "virtual NMIs" control must be 0; see Section 27.2.1.1.)
  - If the "NMI exiting" VM-execution control is 1, IRET does not affect blocking of NMIs. If, in addition, the "virtual NMIs" VM-execution control is 1, the logical processor tracks virtual-NMI blocking. In this case, IRET removes any virtual-NMI blocking.

  The unblocking of NMIs or virtual NMIs specified above occurs even if IRET causes a fault.
- **LMSW.** Outside of VMX non-root operation, LMSW loads its source operand into CR0[3:0], but it does not clear CR0.PE if that bit is set. In VMX non-root operation, an execution of LMSW that does not cause a VM exit (see Section 26.1.3) leaves unmodified any bit in CR0[3:0] corresponding to a bit set in the CR0 guest/host mask. An attempt to set any other bit in CR0[3:0] to a value not supported in VMX operation (see Section 24.8) causes a general-protection exception. Attempts to clear CR0.PE are ignored without fault.
- **MOV from CR0.** The behavior of MOV from CR0 is determined by the CR0 guest/host mask and the CR0 read shadow. For each position corresponding to a bit clear in the CR0 guest/host mask, the destination operand is loaded with the value of the corresponding bit in CR0. For each position corresponding to a bit set in the CR0 guest/host mask, the destination operand is loaded with the value of the corresponding bit in the CR0 read shadow. Thus, if every bit is cleared in the CR0 guest/host mask, MOV from CR0 reads normally from CR0; if every bit is set in the CR0 guest/host mask, MOV from CR0 returns the value of the CR0 read shadow.

  Depending on the contents of the CR0 guest/host mask and the CR0 read shadow, bits may be set in the destination that would never be set when reading directly from CR0.
- **MOV from CR3.** If the "enable EPT" VM-execution control is 1 and an execution of MOV from CR3 does not cause a VM exit (see Section 26.1.3), the value loaded from CR3 is a guest-physical address; see Section 29.3.1.
- **MOV from CR4.** The behavior of MOV from CR4 is determined by the CR4 guest/host mask and the CR4 read shadow. For each position corresponding to a bit clear in the CR4 guest/host mask, the destination operand is loaded with the value of the corresponding bit in CR4. For each position corresponding to a bit set in the CR4 guest/host mask, the destination operand is loaded with the value of the corresponding bit in the CR4 read shadow. Thus, if every bit is cleared in the CR4 guest/host mask, MOV from CR4 reads normally from CR4; if every bit is set in the CR4 guest/host mask, MOV from CR4 returns the value of the CR4 read shadow.

  Depending on the contents of the CR4 guest/host mask and the CR4 read shadow, bits may be set in the destination that would never be set when reading directly from CR4.
- **MOV from CR8.** If the MOV from CR8 instruction does not cause a VM exit (see Section 26.1.3), its behavior is modified if the "use TPR shadow" VM-execution control is 1; see Section 30.3.
- **MOV to CR0.** An execution of MOV to CR0 that does not cause a VM exit (see Section 26.1.3) leaves unmodified any bit in CR0 corresponding to a bit set in the CR0 guest/host mask. Treatment of attempts to modify other bits in CR0 depends on the setting of the "unrestricted guest" VM-execution control:
  - If the control is 0, MOV to CR0 causes a general-protection exception if it attempts to set any bit in CR0 to a value not supported in VMX operation (see Section 24.8).
  - If the control is 1, MOV to CR0 causes a general-protection exception if it attempts to set any bit in CR0 other than bit 0 (PE) or bit 31 (PG) to a value not supported in VMX operation. It remains the case, however, that MOV to CR0 causes a general-protection exception if it would result in CR0.PE = 0 and CR0.PG = 1 or if it would result in CR0.PG = 1, CR4.PAE = 0, and IA32_EFER.LME = 1.
- **MOV to CR3.** If the "enable EPT" VM-execution control is 1 and an execution of MOV to CR3 does not cause a VM exit (see Section 26.1.3), the value loaded into CR3 is treated as a guest-physical address; see Section 29.3.1.
  - If PAE paging is not being used, the instruction does not use the guest-physical address to access memory and it does not cause it to be translated through EPT.[1]

— If PAE paging is being used, the instruction translates the guest-physical address through EPT and uses the result to load the four (4) page-directory-pointer-table entries (PDPTEs). The instruction does not use the guest-physical addresses the PDPTEs to access memory and it does not cause them to be translated through EPT.

- **MOV to CR4.** An execution of MOV to CR4 that does not cause a VM exit (see Section 26.1.3) leaves unmodified any bit in CR4 corresponding to a bit set in the CR4 guest/host mask. Such an execution causes a general-protection exception if it attempts to set any bit in CR4 (not corresponding to a bit set in the CR4 guest/host mask) to a value not supported in VMX operation (see Section 24.8).
- **MOV to CR8.** If the MOV **to** CR8 instruction does not cause a VM exit (see Section 26.1.3), its behavior is modified if the "use TPR shadow" VM-execution control is 1; see Section 30.3.
- **MWAIT.** Behavior of the MWAIT instruction (which always causes an invalid-opcode exception—#UD—if CPL > 0) is determined by the setting of the "MWAIT exiting" VM-execution control:
  - — If the "MWAIT exiting" VM-execution control is 1, MWAIT causes a VM exit.
  - — If the "MWAIT exiting" VM-execution control is 0, MWAIT operates normally if one of the following are true: (1) ECX[0] is 0; (2) RFLAGS.IF = 1; or both of the following are true: (a) the "interrupt-window exiting" VM-execution control is 0; and (b) the logical processor has not recognized a pending virtual interrupt (see Section 29.2.1).
  - — If the "MWAIT exiting" VM-execution control is 0, ECX[0] = 1, and RFLAGS.IF = 0, MWAIT does not cause the processor to enter an implementation-dependent optimized state if either the "interrupt-window exiting" VM-execution control is 1 or the logical processor has recognized a pending virtual interrupt; instead, control passes to the instruction following the MWAIT instruction.
- **PCONFIG.** Behavior of the PCONFIG instruction is determined by the setting of the "enable PCONFIG" VM-execution control:
  - — If the "enable PCONFIG" VM-execution control is 0, PCONFIG causes an invalid-opcode exception (#UD). This exception takes priority over any exception the instruction may incur.
  - — If the "enable PCONFIG" VM-execution control is 1, PCONFIG may cause a VM exit as specified in Section 26.1.3; if it does not cause such a VM exit, it operates normally.
- **RDMSR.** Section 26.1.3 identifies when executions of the RDMSR instruction cause VM exits. If such an execution causes neither a fault due to CPL > 0 nor a VM exit, the instruction's behavior may be modified for certain values of ECX:
  - — If ECX contains 10H (indicating the IA32_TIME_STAMP_COUNTER MSR), the value returned by the instruction is determined by the setting of the "use TSC offsetting" VM-execution control:
    - If the control is 0, RDMSR operates normally, loading EAX:EDX with the value of the IA32_TIME_STAMP_COUNTER MSR.
    - If the control is 1, the value returned is determined by the setting of the "use TSC scaling" VM-execution control:
      - — If the control is 0, RDMSR loads EAX:EDX with the sum of the value of the IA32_TIME_STAMP_COUNTER MSR and the value of the TSC offset.
      - — If the control is 1, RDMSR first computes the product of the value of the IA32_TIME_STAMP_COUNTER MSR and the value of the TSC multiplier. It then shifts the value of the product right 48 bits and loads EAX:EDX with the sum of that shifted value and the value of the TSC offset.

    The 1-setting of the "use TSC-offsetting" VM-execution control does not affect executions of RDMSR if ECX contains 6E0H (indicating the IA32_TSC_DEADLINE MSR). Such executions return the APIC-timer deadline relative to the actual timestamp counter without regard to the TSC offset.
  - — If ECX is in the range 800H–8FFH (indicating an APIC MSR), instruction behavior may be modified if the "virtualize x2APIC mode" VM-execution control is 1; see Section 30.5.

1. A logical processor uses PAE paging if CR0.PG = 1, CR4.PAE = 1 and IA32_EFER.LMA = 0. See Section 4.4 in the *Intel® 64 and IA-32 Architectures Software Developer's Manual, Volume 3A*.

- **RDPID.** Behavior of the RDPID instruction is determined first by the setting of the "enable RDTSCP" VM-execution control:
  - If the "enable RDTSCP" VM-execution control is 0, RDPID causes an invalid-opcode exception (#UD).
  - If the "enable RDTSCP" VM-execution control is 1, RDPID operates normally.
- **RDTSC.** Behavior of the RDTSC instruction is determined by the settings of the "RDTSC exiting" and "use TSC offsetting" VM-execution controls:
  - If both controls are 0, RDTSC operates normally.
  - If the "RDTSC exiting" VM-execution control is 0 and the "use TSC offsetting" VM-execution control is 1, the value returned is determined by the setting of the "use TSC scaling" VM-execution control:
    - If the control is 0, RDTSC loads EAX:EDX with the sum of the value of the IA32_TIME_STAMP_COUNTER MSR and the value of the TSC offset.
    - If the control is 1, RDTSC first computes the product of the value of the IA32_TIME_STAMP_COUNTER MSR and the value of the TSC multiplier. It then shifts the value of the product right 48 bits and loads EAX:EDX with the sum of that shifted value and the value of the TSC offset.
  - If the "RDTSC exiting" VM-execution control is 1, RDTSC causes a VM exit.
- **RDTSCP.** Behavior of the RDTSCP instruction is determined first by the setting of the "enable RDTSCP" VM-execution control:
  - If the "enable RDTSCP" VM-execution control is 0, RDTSCP causes an invalid-opcode exception (#UD). This exception takes priority over any other exception the instruction may incur.
  - If the "enable RDTSCP" VM-execution control is 1, treatment is based on the settings of the "RDTSC exiting" and "use TSC offsetting" VM-execution controls:
    - If both controls are 0, RDTSCP operates normally.
    - If the "RDTSC exiting" VM-execution control is 0 and the "use TSC offsetting" VM-execution control is 1, the value returned is determined by the setting of the "use TSC scaling" VM-execution control:
      - If the control is 0, RDTSCP loads EAX:EDX with the sum of the value of the IA32_TIME_STAMP_COUNTER MSR and the value of the TSC offset.
      - If the control is 1, RDTSCP first computes the product of the value of the IA32_TIME_STAMP_COUNTER MSR and the value of the TSC multiplier. It then shifts the value of the product right 48 bits and loads EAX:EDX with the sum of that shifted value and the value of the TSC offset.

      In either case, RDTSCP also loads ECX with the value of bits 31:0 of the IA32_TSC_AUX MSR.
    - If the "RDTSC exiting" VM-execution control is 1, RDTSCP causes a VM exit.
- **SMSW.** The behavior of SMSW is determined by the CR0 guest/host mask and the CR0 read shadow. For each position corresponding to a bit clear in the CR0 guest/host mask, the destination operand is loaded with the value of the corresponding bit in CR0. For each position corresponding to a bit set in the CR0 guest/host mask, the destination operand is loaded with the value of the corresponding bit in the CR0 read shadow. Thus, if every bit is cleared in the CR0 guest/host mask, SMSW reads normally from CR0; if every bit is set in the CR0 guest/host mask, SMSW returns the value of the CR0 read shadow.

  Note the following: (1) for any memory destination or for a 16-bit register destination, only the low 16 bits of the CR0 guest/host mask and the CR0 read shadow are used (bits 63:16 of a register destination are left unchanged); (2) for a 32-bit register destination, only the low 32 bits of the CR0 guest/host mask and the CR0 read shadow are used (bits 63:32 of the destination are cleared); and (3) depending on the contents of the CR0 guest/host mask and the CR0 read shadow, bits may be set in the destination that would never be set when reading directly from CR0.
- **TPAUSE.** Behavior of the TPAUSE instruction is determined first by the setting of the "enable user wait and pause" VM-execution control:
  - If the "enable user wait and pause" VM-execution control is 0, TPAUSE causes an invalid-opcode exception (#UD). This exception takes priority over any exception the instruction may incur.

— If the "enable user wait and pause" VM-execution control is 1, treatment is based on the setting of the "RDTSC exiting" VM-execution control:

  • If the "RDTSC exiting" VM-execution control is 0, the instruction delays for an amount of time called here the **physical delay**. The physical delay is first computed by determining the **virtual delay** (the time to delay relative to the guest's timestamp counter).

    If IA32_UMWAIT_CONTROL[31:2] is zero, the virtual delay is the value in EDX:EAX minus the value that RDTSC would return (see above); if IA32_UMWAIT_CONTROL[31:2] is not zero, the virtual delay is the minimum of that difference and AND(IA32_UMWAIT_CONTROL,FFFFFFFCH).

    The physical delay depends upon the settings of the "use TSC offsetting" and "use TSC scaling" VM-execution controls:

    — If either control is 0, the physical delay is the virtual delay.

    — If both controls are 1, the virtual delay is multiplied by 2^{48} (using a shift) to produce a 128-bit integer. That product is then divided by the TSC multiplier to produce a 64-bit integer. The physical delay is that quotient.

  • If the "RDTSC exiting" VM-execution control is 1, TPAUSE causes a VM exit.

• **UMONITOR.** Behavior of the UMONITOR instruction is determined by the setting of the "enable user wait and pause" VM-execution control:

— If the "enable user wait and pause" VM-execution control is 0, UMONITOR causes an invalid-opcode exception (#UD). This exception takes priority over any exception the instruction may incur.

— If the "enable user wait and pause" VM-execution control is 1, UMONITOR operates normally.

• **UMWAIT.** Behavior of the UMWAIT instruction is determined first by the setting of the "enable user wait and pause" VM-execution control:

— If the "enable user wait and pause" VM-execution control is 0, UMWAIT causes an invalid-opcode exception (#UD). This exception takes priority over any exception the instruction may incur.

— If the "enable user wait and pause" VM-execution control is 1, treatment is based on the setting of the "RDTSC exiting" VM-execution control:

  • If the "RDTSC exiting" VM-execution control is 0, and if the instruction causes a delay, the amount of time delayed is called here the **physical delay**. The physical delay is first computed by determining the **virtual delay** (the time to delay relative to the guest's timestamp counter).

    If IA32_UMWAIT_CONTROL[31:2] is zero, the virtual delay is the value in EDX:EAX minus the value that RDTSC would return (see above); if IA32_UMWAIT_CONTROL[31:2] is not zero, the virtual delay is the minimum of that difference and AND(IA32_UMWAIT_CONTROL,FFFFFFFCH).

    The physical delay depends upon the settings of the "use TSC offsetting" and "use TSC scaling" VM-execution controls:

    — If either control is 0, the physical delay is the virtual delay.

    — If both controls are 1, the virtual delay is multiplied by 2^{48} (using a shift) to produce a 128-bit integer. That product is then divided by the TSC multiplier to produce a 64-bit integer. The physical delay is that quotient.

  • If the "RDTSC exiting" VM-execution control is 1, UMWAIT causes a VM exit.

• **WRMSR.** Section 26.1.3 identifies when executions of the WRMSR instruction cause VM exits. If such an execution neither a fault due to CPL > 0 nor a VM exit, the instruction's behavior may be modified for certain values of ECX:

— If ECX contains 79H (indicating IA32_BIOS_UPDT_TRIG MSR), no microcode update is loaded, and control passes to the next instruction. This implies that microcode updates cannot be loaded in VMX non-root operation.

— On processors that support Intel PT but which do not allow it to be used in VMX operation, if ECX contains 570H (indicating the IA32_RTIT_CTL MSR), the instruction causes a general-protection exception.[1]

— If ECX contains 808H (indicating the TPR MSR), 80BH (the EOI MSR), 830H (the ICR MSR), or 83FH (the self-IPI MSR), instruction behavior may be modified if the "virtualize x2APIC mode" VM-execution control is 1; see Section 30.5.

- **XRSTORS.** Behavior of the XRSTORS instruction is determined first by the setting of the "enable XSAVES/XRSTORS" VM-execution control:
  — If the "enable XSAVES/XRSTORS" VM-execution control is 0, XRSTORS causes an invalid-opcode exception (#UD).
  — If the "enable XSAVES/XRSTORS" VM-execution control is 1, treatment is based on the value of the XSS-exiting bitmap (see Section 25.6.21):
    - XRSTORS causes a VM exit if any bit is set in the logical-AND of the following three values: EDX:EAX, the IA32_XSS MSR, and the XSS-exiting bitmap.
    - Otherwise, XRSTORS operates normally.
- **XSAVES.** Behavior of the XSAVES instruction is determined first by the setting of the "enable XSAVES/XRSTORS" VM-execution control:
  — If the "enable XSAVES/XRSTORS" VM-execution control is 0, XSAVES causes an invalid-opcode exception (#UD).
  — If the "enable XSAVES/XRSTORS" VM-execution control is 1, treatment is based on the value of the XSS-exiting bitmap (see Section 25.6.21):
    - XSAVES causes a VM exit if any bit is set in the logical-AND of the following three values: EDX:EAX, the IA32_XSS MSR, and the XSS-exiting bitmap.
    - Otherwise, XSAVES operates normally.

26.4 OTHER CHANGES IN VMX NON-ROOT OPERATION

Treatments of event blocking, task switches, and user interrupts differ in VMX non-root operation as described in the following sections.

26.4.1 Event Blocking

Event blocking is modified in VMX non-root operation as follows:

- If the "external-interrupt exiting" VM-execution control is 1, RFLAGS.IF does not control the blocking of external interrupts. In this case, an external interrupt that is not blocked for other reasons causes a VM exit (even if RFLAGS.IF = 0).
- If the "external-interrupt exiting" VM-execution control is 1, external interrupts may or may not be blocked by STI or by MOV SS (behavior is implementation-specific).
- If the "NMI exiting" VM-execution control is 1, non-maskable interrupts (NMIs) may or may not be blocked by STI or by MOV SS (behavior is implementation-specific).

26.4.2 Treatment of Task Switches

Task switches are not allowed in VMX non-root operation. Any attempt to effect a task switch in VMX non-root operation causes a VM exit. However, the following checks are performed (in the order indicated), possibly resulting in a fault, before there is any possibility of a VM exit due to task switch:

1. If a task gate is being used, appropriate checks are made on its P bit and on the proper values of the relevant privilege fields. The following cases detail the privilege checks performed:

1. Software should read the VMX capability MSR IA32_VMX_MISC to determine whether the processor allows Intel PT to be used in VMX operation (see Appendix A.6).

a. If CALL, INT *n*, INT1, INT3, INTO, or JMP accesses a task gate in IA-32e mode, a general-protection exception occurs.

b. If CALL, INT *n*, INT3, INTO, or JMP accesses a task gate outside IA-32e mode, privilege-levels checks are performed on the task gate but, if they pass, privilege levels are not checked on the referenced task-state segment (TSS) descriptor.

c. If CALL or JMP accesses a TSS descriptor directly in IA-32e mode, a general-protection exception occurs.

d. If CALL or JMP accesses a TSS descriptor directly outside IA-32e mode, privilege levels are checked on the TSS descriptor.

e. If a non-maskable interrupt (NMI), an exception, or an external interrupt accesses a task gate in the IDT in IA-32e mode, a general-protection exception occurs.

f. If a non-maskable interrupt (NMI), an exception other than breakpoint exceptions (#BP) and overflow exceptions (#OF), or an external interrupt accesses a task gate in the IDT outside IA-32e mode, no privilege checks are performed.

g. If IRET is executed with RFLAGS.NT = 1 in IA-32e mode, a general-protection exception occurs.

h. If IRET is executed with RFLAGS.NT = 1 outside IA-32e mode, a TSS descriptor is accessed directly and no privilege checks are made.

2. Checks are made on the new TSS selector (for example, that is within GDT limits).
3. The new TSS descriptor is read. (A page fault results if a relevant GDT page is not present).
4. The TSS descriptor is checked for proper values of type (depends on type of task switch), P bit, S bit, and limit.

Only if checks 1–4 all pass (do not generate faults) might a VM exit occur. However, the ordering between a VM exit due to a task switch and a page fault resulting from accessing the old TSS or the new TSS is implementation-specific. Some processors may generate a page fault (instead of a VM exit due to a task switch) if accessing either TSS would cause a page fault. Other processors may generate a VM exit due to a task switch even if accessing either TSS would cause a page fault.

If an attempt at a task switch through a task gate in the IDT causes an exception (before generating a VM exit due to the task switch) and that exception causes a VM exit, information about the event whose delivery that accessed the task gate is recorded in the IDT-vectoring information fields and information about the exception that caused the VM exit is recorded in the VM-exit interruption-information fields. See Section 28.2. The fact that a task gate was being accessed is not recorded in the VMCS.

If an attempt at a task switch through a task gate in the IDT causes VM exit due to the task switch, information about the event whose delivery accessed the task gate is recorded in the IDT-vectoring fields of the VMCS. Since the cause of such a VM exit is a task switch and not an interruption, the valid bit for the VM-exit interruption information field is 0. See Section 28.2.

26.5 FEATURES SPECIFIC TO VMX NON-ROOT OPERATION

Some VM-execution controls support features that are specific to VMX non-root operation. These are the VMX-preemption timer (Section 26.5.1) and the monitor trap flag (Section 26.5.2), translation of guest-physical addresses (Section 26.5.3 and Section 26.5.4), APIC virtualization (Section 26.5.5), VM functions (Section 26.5.6), and virtualization exceptions (Section 26.5.7).

26.5.1 VMX-Preemption Timer

If the last VM entry was performed with the 1-setting of "activate VMX-preemption timer" VM-execution control, the **VMX-preemption timer** counts down (from the value loaded by VM entry; see Section 27.7.4) in VMX non-root operation. When the timer counts down to zero, it stops counting down and a VM exit occurs (see Section 26.2).

The VMX-preemption timer counts down at rate proportional to that of the timestamp counter (TSC). Specifically, the timer counts down by 1 every time bit X in the TSC changes due to a TSC increment. The value of X is in the range 0–31 and can be determined by consulting the VMX capability MSR IA32_VMX_MISC (see Appendix A.6).

The VMX-preemption timer operates in the C-states C0, C1, and C2; it also operates in the shutdown and wait-for-SIPI states. If the timer counts down to zero in any state other than the wait-for SIPI state, the logical processor transitions to the C0 C-state and causes a VM exit; the timer does not cause a VM exit if it counts down to zero in the wait-for-SIPI state. The timer is not decremented in C-states deeper than C2.

Treatment of the timer in the case of system management interrupts (SMIs) and system-management mode (SMM) depends on whether the treatment of SMIs and SMM:

- If the default treatment of SMIs and SMM (see Section 32.14) is active, the VMX-preemption timer counts across an SMI to VMX non-root operation, subsequent execution in SMM, and the return from SMM via the RSM instruction. However, the timer can cause a VM exit only from VMX non-root operation. If the timer expires during SMI, in SMM, or during RSM, a timer-induced VM exit occurs immediately after RSM with its normal priority unless it is blocked based on activity state (Section 26.2).
- If the dual-monitor treatment of SMIs and SMM (see Section 32.15) is active, transitions into and out of SMM are VM exits and VM entries, respectively. The treatment of the VMX-preemption timer by those transitions is mostly the same as for ordinary VM exits and VM entries; Section 32.15.2 and Section 32.15.4 detail some differences.

26.5.2 Monitor Trap Flag

The **monitor trap flag** is a debugging feature that causes VM exits to occur on certain instruction boundaries in VMX non-root operation. Such VM exits are called **MTF VM exits**. An MTF VM exit may occur on an instruction boundary in VMX non-root operation as follows:

- If the "monitor trap flag" VM-execution control is 1 and VM entry is injecting a vectored event (see Section 27.6.1), an MTF VM exit is pending on the instruction boundary before the first instruction following the VM entry.
- If VM entry is injecting a pending MTF VM exit (see Section 27.6.2), an MTF VM exit is pending on the instruction boundary before the first instruction following the VM entry. This is the case even if the "monitor trap flag" VM-execution control is 0.
- If the "monitor trap flag" VM-execution control is 1, VM entry is not injecting an event, and a pending event (e.g., debug exception or interrupt) is delivered before an instruction can execute, an MTF VM exit is pending on the instruction boundary following delivery of the event (or any nested exception).
- Suppose that the "monitor trap flag" VM-execution control is 1, VM entry is not injecting an event, and the first instruction following VM entry is a REP-prefixed string instruction:
  - If the first iteration of the instruction causes a fault, an MTF VM exit is pending on the instruction boundary following delivery of the fault (or any nested exception).
  - If the first iteration of the instruction does not cause a fault, an MTF VM exit is pending on the instruction boundary after that iteration.
- Suppose that the "monitor trap flag" VM-execution control is 1, VM entry is not injecting an event, and the first instruction following VM entry is the XBEGIN instruction. In this case, an MTF VM exit is pending at the fallback instruction address of the XBEGIN instruction. This behavior applies regardless of whether advanced debugging of RTM transactional regions has been enabled (see Section 16.3.7, "RTM-Enabled Debugger Support," of *Intel® 64 and IA-32 Architectures Software Developer's Manual, Volume 1*).
- Suppose that the "monitor trap flag" VM-execution control is 1, VM entry is not injecting an event, and the first instruction following VM entry is neither a REP-prefixed string instruction or the XBEGIN instruction:
  - If the instruction causes a fault, an MTF VM exit is pending on the instruction boundary following delivery of the fault (or any nested exception).[1]
  - If the instruction does not cause a fault, an MTF VM exit is pending on the instruction boundary following execution of that instruction. If the instruction is INT1, INT3, or INTO, this boundary follows delivery of any software exception. If the instruction is INT *n*, this boundary follows delivery of a software interrupt. If the instruction is HLT, the MTF VM exit will be from the HLT activity state.

1. This item includes the cases of an invalid opcode exception—#UD— generated by the UD0, UD1, and UD2 instructions and a BOUND-range exceeded exception—#BR—generated by the BOUND instruction.

No MTF VM exit occurs if another VM exit occurs before reaching the instruction boundary on which an MTF VM exit would be pending (e.g., due to an exception or triple fault).

An MTF VM exit occurs on the instruction boundary on which it is pending unless a higher priority event takes precedence or the MTF VM exit is blocked due to the activity state:

- System-management interrupts (SMIs), INIT signals, and higher priority events take priority over MTF VM exits. MTF VM exits take priority over debug-trap exceptions and lower priority events.
- No MTF VM exit occurs if the processor is in either the shutdown activity state or wait-for-SIPI activity state. If a non-maskable interrupt subsequently takes the logical processor out of the shutdown activity state without causing a VM exit, an MTF VM exit is pending after delivery of that interrupt.

Special treatment may apply to Intel SGX instructions or if the logical processor is in enclave mode. See Section 40.2 for details.

26.5.3 Translation of Guest-Physical Addresses Using EPT

The extended page-table mechanism (EPT) is a feature that can be used to support the virtualization of physical memory. When EPT is in use, certain physical addresses are treated as guest-physical addresses and are not used to access memory directly. Instead, guest-physical addresses are translated by traversing a set of EPT paging structures to produce physical addresses that are used to access memory.

Details of the EPT mechanism are given in Section 29.3.

26.5.4 Translation of Guest-Physical Addresses Used by Intel Processor Trace

As described in Chapter 33, Intel® Processor Trace (Intel PT) captures information about software execution using dedicated hardware facilities.

Intel PT can be configured so that the trace output is written to memory using physical addresses. For example, when the ToPA (table of physical addresses) output mechanism is used, the IA32_RTIT_OUTPUT_BASE MSR contains the physical address of the base of the current ToPA. Each entry in that table contains the physical address of an output region in memory. When an output region becomes full, the ToPA output mechanism directs subsequent trace output to the next output region as indicated in the ToPA.

When the "Intel PT uses guest physical addresses" VM-execution control is 1, the logical processor treats the addresses used by Intel PT (the output addresses as well as those used to discover the output addresses) as guest-physical addresses, translating to physical addresses using EPT before trace output is written to memory.

Translating these addresses through EPT implies that the trace-output mechanism may cause EPT violations and VM exits; details are provided in Section 26.5.4.1. Section 26.5.4.2 describes a mechanism that ensures that these VM exits do not cause loss of trace data.

26.5.4.1 Guest-Physical Address Translation for Intel PT: Details

When the "Intel PT uses guest physical addresses" VM-execution control is 1, the addresses used by Intel PT are treated as guest-physical addresses and translated using EPT. These addresses include the addresses of the output regions as well as the addresses of the ToPA entries that contain the output-region addresses.

Translation of accesses by the trace-output process may result in EPT violations or EPT misconfigurations (Section 29.3.3), resulting in VM exits. EPT violations resulting for the trace-output process always cause VM exits and are never converted to virtualization exceptions (Section 26.5.7.1).

If no EPT violation or EPT misconfiguration occurs and if page-modification logging (Section 29.3.6) is enabled, the address of an output region may be added to the page-modification log. If the log is full, a page-modification log-full event occurs, resulting in a VM exit.

If the "virtualize APIC accesses" VM-execution control is 1, a guest-physical address used by the trace-output process may be translated to an address on the APIC-access page. In this case, the access by the trace-output process causes an APIC-access VM exit as discussed in Section 30.4.6.1.

26.5.4.2 Trace-Address Pre-Translation (TAPT)

Because it buffers trace data produced by Intel PT before it is written to memory, the processor ensures that buffered data is not lost when a VM exit disables Intel PT. Specifically, the processor ensures that there is sufficient space left in the current output page for the buffered data. If this were not done, buffered trace data could be lost and the resulting trace corrupted.

To prevent the loss of buffered trace data, the processor uses a mechanism called **trace-address pre-translation** (**TAPT**). With TAPT, the processor translates using EPT the guest-physical address of the current output region before that address would be used to write buffered trace data to memory.

Because of TAPT, no translation (and thus no EPT violation) occurs at the time output is written to memory; the writes to memory use translations that were cached as part of TAPT. (The details given in Section 26.5.4.1 apply to TAPT.) TAPT ensures that, if a write to the output region would cause an EPT violation, the resulting VM exit is delivered at the time of TAPT, before the region would be used. This allows software to resolve the EPT violation at that time and ensures that, when it is necessary to write buffered trace data to memory, that data will not be lost due to an EPT violation.

TAPT (and resulting VM exits) may occur at any of the following times:

- When software in VMX non-root operation enables tracing by loading the IA32_RTIT_CTL MSR to set the TraceEn bit, using the WRMSR instruction or the XRSTORS instruction.

  Any VM exit resulting from TAPT in this case is trap-like: the WRMSR or XRSTORS completes before the VM exit occurs (for example, the value of CS:RIP saved in the guest-state area of the VMCS references the next instruction).
- At an instruction boundary when one output region becomes full and Intel PT transitions to the next output region.

  VM exits resulting from TAPT in this case take priority over any pending debug exceptions. Such a VM exit will save information about such exceptions in the guest-state area of the VMCS.
- As part of a VM entry that enables Intel PT. See Section 27.5 for details.

TAPT may translate not only the guest-physical address of the current output region but those of subsequent output regions as well. (Doing so may provide better protection of trace data.) This implies that any VM exits resulting from TAPT may result from the translation of output-region addresses other than that of the current output region.

26.5.5 APIC Virtualization

APIC virtualization is a collection of features that can be used to support the virtualization of interrupts and the Advanced Programmable Interrupt Controller (APIC). When APIC virtualization is enabled, the processor emulates many accesses to the APIC, tracks the state of the virtual APIC, and delivers virtual interrupts — all in VMX non-root operation without a VM exit.

Details of the APIC virtualization are given in Chapter 30.

26.5.6 VM Functions

A **VM function** is an operation provided by the processor that can be invoked from VMX non-root operation without a VM exit. VM functions are enabled and configured by the settings of different fields in the VMCS. Software in VMX non-root operation invokes a VM function with the **VMFUNC** instruction; the value of EAX selects the specific VM function being invoked.

Section 26.5.6.1 explains how VM functions are enabled. Section 26.5.6.2 specifies the behavior of the VMFUNC instruction. Section 26.5.6.3 describes a specific VM function called **EPTP switching**.

26.5.6.1 Enabling VM Functions

Software enables VM functions generally by setting the "enable VM functions" VM-execution control. A specific VM function is enabled by setting the corresponding VM-function control.

Suppose, for example, that software wants to enable EPTP switching (VM function 0; see Section 25.6.14).To do so, it must set the "activate secondary controls" VM-execution control (bit 31 of the primary processor-based VM-execution controls), the "enable VM functions" VM-execution control (bit 13 of the secondary processor-based VM-execution controls) and the "EPTP switching" VM-function control (bit 0 of the VM-function controls).

26.5.6.2 General Operation of the VMFUNC Instruction

The VMFUNC instruction causes an invalid-opcode exception (#UD) if the "enable VM functions" VM-execution controls is 0[1] or the value of EAX is greater than 63 (only VM functions 0–63 can be enable). Otherwise, the instruction causes a VM exit if the bit at position EAX is 0 in the VM-function controls (the selected VM function is not enabled). If such a VM exit occurs, the basic exit reason used is 59 (3BH), indicating "VMFUNC", and the length of the VMFUNC instruction is saved into the VM-exit instruction-length field. If the instruction causes neither an invalid-opcode exception nor a VM exit due to a disabled VM function, it performs the functionality of the VM function specified by the value in EAX.

Individual VM functions may perform additional fault checking (e.g., one might cause a general-protection exception if CPL > 0). In addition, specific VM functions may include checks that might result in a VM exit. If such a VM exit occurs, VM-exit information is saved as described in the previous paragraph. The specification of a VM function may indicate that additional VM-exit information is provided.

The specific behavior of the EPTP-switching VM function (including checks that result in VM exits) is given in Section 26.5.6.3.

26.5.6.3 EPTP Switching

EPTP switching is VM function 0. This VM function allows software in VMX non-root operation to load a new value for the EPT pointer (EPTP), thereby establishing a different EPT paging-structure hierarchy (see Section 29.3 for details of the operation of EPT). Software is limited to selecting from a list of potential EPTP values configured in advance by software in VMX root operation.

Specifically, the value of ECX is used to select an entry from the EPTP list, the 4-KByte structure referenced by the EPTP-list address (see Section 25.6.14; because this structure contains 512 8-Byte entries, VMFUNC causes a VM exit if ECX ≥ 512). If the selected entry is a valid EPTP value (it would not cause VM entry to fail; see Section 27.2.1.1), it is stored in the EPTP field of the current VMCS and is used for subsequent accesses using guest-physical addresses. The following pseudocode provides details:

```
IF ECX ≥ 512
    THEN VM exit;
    ELSE
        tent_EPTP := 8 bytes from EPTP-list address + 8 * ECX;
        IF tent_EPTP is not a valid EPTP value (would cause VM entry to fail if in EPTP)
            THEN VM exit;
            ELSE
                write tent_EPTP to the EPTP field in the current VMCS;
                use tent_EPTP as the new EPTP value for address translation;
                IF processor supports the 1-setting of the "EPT-violation #VE" VM-execution control
                    THEN
                        write ECX[15:0] to EPTP-index field in current VMCS;
                        use ECX[15:0] as EPTP index for subsequent EPT-violation virtualization exceptions (see Section 26.5.7.2);
                FI;
        FI;
FI;
```

Execution of the EPTP-switching VM function does not modify the state of any registers; no flags are modified.

1. "Enable VM functions" is a secondary processor-based VM-execution control. If bit 31 of the primary processor-based VM-execution controls is 0, VMX non-root operation functions as if the "enable VM functions" VM-execution control were 0. See Section 25.6.2.

If the "Intel PT uses guest physical addresses" VM-execution control is 1 and IA32_RTIT_CTL.TraceEn = 1, any execution of the EPTP-switching VM function causes a VM exit.[1]

As noted in Section 26.5.6.2, an execution of the EPTP-switching VM function that causes a VM exit (as specified above), uses the basic exit reason 59, indicating "VMFUNC". The length of the VMFUNC instruction is saved into the VM-exit instruction-length field. No additional VM-exit information is provided.

An execution of VMFUNC loads EPTP from the EPTP list (and thus does not cause a fault or VM exit) is called an **EPTP-switching VMFUNC**. After an EPTP-switching VMFUNC, control passes to the next instruction. The logical processor starts creating and using guest-physical and combined mappings associated with the new value of bits 51:12 of EPTP; the combined mappings created and used are associated with the current VPID and PCID (these are not changed by VMFUNC).[2] If the "enable VPID" VM-execution control is 0, an EPTP-switching VMFUNC invalidates combined mappings associated with VPID 0000H (for all PCIDs and for all EP4TA values, where EP4TA is the value of bits 51:12 of EPTP).

Because an EPTP-switching VMFUNC may change the translation of guest-physical addresses, it may affect use of the guest-physical address in CR3. The EPTP-switching VMFUNC cannot itself cause a VM exit due to an EPT violation or an EPT misconfiguration due to the translation of that guest-physical address through the new EPT paging structures. The following items provide details that apply if CR0.PG = 1:

- If 32-bit paging or 4-level paging[3] is in use (either CR4.PAE = 0 or IA32_EFER.LMA = 1), the next memory access with a linear address uses the translation of the guest-physical address in CR3 through the new EPT paging structures. As a result, this access may cause a VM exit due to an EPT violation or an EPT misconfiguration encountered during that translation.
- If PAE paging is in use (CR4.PAE = 1 and IA32_EFER.LMA = 0), an EPTP-switching VMFUNC **does not** load the four page-directory-pointer-table entries (PDPTEs) from the guest-physical address in CR3. The logical processor continues to use the four guest-physical addresses already present in the PDPTEs. The guest-physical address in CR3 is not translated through the new EPT paging structures (until some operation that would load the PDPTEs).

  The EPTP-switching VMFUNC cannot itself cause a VM exit due to an EPT violation or an EPT misconfiguration encountered during the translation of a guest-physical address in any of the PDPTEs. A subsequent memory access with a linear address uses the translation of the guest-physical address in the appropriate PDPTE through the new EPT paging structures. As a result, such an access may cause a VM exit due to an EPT violation or an EPT misconfiguration encountered during that translation.

If an EPTP-switching VMFUNC establishes an EPTP value that enables accessed and dirty flags for EPT (by setting bit 6), subsequent memory accesses may fail to set those flags as specified if there has been no appropriate execution of INVEPT since the last use of an EPTP value that does not enable accessed and dirty flags for EPT (because bit 6 is clear) and that is identical to the new value on bits 51:12.

IF the processor supports the 1-setting of the "EPT-violation #VE" VM-execution control, an EPTP-switching VMFUNC loads the value in ECX[15:0] into to EPTP-index field in current VMCS. Subsequent EPT-violation virtualization exceptions will save this value into the virtualization-exception information area (see Section 26.5.7.2);

26.5.7 Virtualization Exceptions

A **virtualization exception** is a new processor exception. It uses vector 20 and is abbreviated #VE.

A virtualization exception can occur only in VMX non-root operation. Virtualization exceptions occur only with certain settings of certain VM-execution controls. Generally, these settings imply that certain conditions that would normally cause VM exits instead cause virtualization exceptions

In particular, the 1-setting of the "EPT-violation #VE" VM-execution control causes some EPT violations to generate virtualization exceptions instead of VM exits. Section 26.5.7.1 provides the details of how the processor determines whether an EPT violation causes a virtualization exception or a VM exit.

---

1. Such a VM exit ensures the proper recording of trace data that might otherwise be lost during the change of EPT paging-structure hierarchy. Software handling the VM exit can change emulate the VM function and then resume the guest.
2. If the "enable VPID" VM-execution control is 0, the current VPID is 0000H; if CR4.PCIDE = 0, the current PCID is 000H.
3. Earlier versions of this manual used the term "IA-32e paging" to identify 4-level paging.

When the processor encounters a virtualization exception, it saves information about the exception to the virtualization-exception information area; see Section 26.5.7.2.

After saving virtualization-exception information, the processor delivers a virtualization exception as it would any other exception; see Section 26.5.7.3 for details.

26.5.7.1 Convertible EPT Violations

If the "EPT-violation #VE" VM-execution control is 0 (e.g., on processors that do not support this feature), EPT violations always cause VM exits. If instead the control is 1, certain EPT violations may be converted to cause virtualization exceptions instead; such EPT violations are **convertible**.

The values of certain EPT paging-structure entries determine which EPT violations are convertible. Specifically, bit 63 of certain EPT paging-structure entries may be defined to mean **suppress #VE**:

- If bits 2:0 of an EPT paging-structure entry are all 0, the entry is not **present**.[1] If the processor encounters such an entry while translating a guest-physical address, it causes an EPT violation. The EPT violation is convertible if and only if bit 63 of the entry is 0.
- If an EPT paging-structure entry is present, the following cases apply:
  - If the value of the EPT paging-structure entry is not supported, the entry is **misconfigured**. If the processor encounters such an entry while translating a guest-physical address, it causes an EPT misconfiguration (not an EPT violation). EPT misconfigurations always cause VM exits.
  - If the value of the EPT paging-structure entry is supported, the following cases apply:
    - If bit 7 of the entry is 1, or if the entry is an EPT PTE, the entry maps a page. If the processor uses such an entry to translate a guest-physical address, and if an access to that address causes an EPT violation, the EPT violation is convertible if and only if bit 63 of the entry is 0.
    - If bit 7 of the entry is 0 and the entry is not an EPT PTE, the entry references another EPT paging structure. The processor does not use the value of bit 63 of the entry to determine whether any subsequent EPT violation is convertible.

If an access to a guest-physical address causes an EPT violation, bit 63 of exactly one of the EPT paging-structure entries used to translate that address is used to determine whether the EPT violation is convertible: either a entry that is not present (if the guest-physical address does not translate to a physical address) or an entry that maps a page (if it does).

A convertible EPT violation instead causes a virtualization exception if the following all hold:

- CR0.PE = 1;
- the logical processor is not in the process of delivering an event through the IDT;
- the EPT violation does not result from the output process of Intel Processor Trace (Section 26.5.4); and
- the 32 bits at offset 4 in the virtualization-exception information area are all 0.

Delivery of virtualization exceptions writes the value FFFFFFFFH to offset 4 in the virtualization-exception information area (see Section 26.5.7.2). Thus, once a virtualization exception occurs, another can occur only if software clears this field.

26.5.7.2 Virtualization-Exception Information

Virtualization exceptions save data into the virtualization-exception information area (see Section 25.6.20). Table 26-1 enumerates the data saved and the format of the area.

A VMM may allow guest software to access the virtualization-exception information area. If it does, the guest software may modify that memory (e.g., to clear the 32-bit value at offset 4; see Section 26.5.7.1). (This is an exception to the general requirement given in Section 25.11.4.)

1. If the "mode-based execute control for EPT" VM-execution control is 1, an EPT paging-structure entry is present if any of bits 2:0 **or bit 10** is 1.

Table 26-1. Format of the Virtualization-Exception Information Area

Byte Offset	Contents
0	The 32-bit value that would have been saved into the VMCS as an exit reason had a VM exit occurred instead of the virtualization exception. For EPT violations, this value is 48 (00000030H)
4	FFFFFFFFH
8	The 64-bit value that would have been saved into the VMCS as an exit qualification had a VM exit occurred instead of the virtualization exception
16	The 64-bit value that would have been saved into the VMCS as a guest-linear address had a VM exit occurred instead of the virtualization exception
24	The 64-bit value that would have been saved into the VMCS as a guest-physical address had a VM exit occurred instead of the virtualization exception
32	The current 16-bit value of the EPTP index VM-execution control (see Section 25.6.20 and Section 26.5.6.3)

26.5.7.3 Delivery of Virtualization Exceptions

After saving virtualization-exception information, the processor treats a virtualization exception as it does other exceptions:

- If bit 20 (#VE) is 1 in the exception bitmap in the VMCS, a virtualization exception causes a VM exit (see below). If the bit is 0, the virtualization exception is delivered using gate descriptor 20 in the IDT.
- Virtualization exceptions produce no error code. Delivery of a virtualization exception pushes no error code on the stack.
- With respect to double faults, virtualization exceptions have the same severity as page faults. If delivery of a virtualization exception encounters a nested fault that is either contributory or a page fault, a double fault (#DF) is generated. See Chapter 6, "Interrupt 8—Double Fault Exception (#DF)" in *Intel® 64 and IA-32 Architectures Software Developer's Manual, Volume 3A*.

  It is not possible for a virtualization exception to be encountered while delivering another exception (see Section 26.5.7.1).

If a virtualization exception causes a VM exit directly (because bit 20 is 1 in the exception bitmap), information about the exception is saved normally in the VM-exit interruption information field in the VMCS (see Section 28.2.2). Specifically, the event is reported as a hardware exception with vector 20 and no error code. Bit 12 of the field (NMI unblocking due to IRET) is set normally.

If a virtualization exception causes a VM exit indirectly (because bit 20 is 0 in the exception bitmap and delivery of the exception generates an event that causes a VM exit), information about the exception is saved normally in the IDT-vectoring information field in the VMCS (see Section 28.2.4). Specifically, the event is reported as a hardware exception with vector 20 and no error code.

26.5.8 PASID Translation

The ENQCMD and ENQCMDS instructions each performs a 64-byte enqueue store that includes a 20-bit PASID value in bits 19:0. For ENQCMD, the PASID is normally the value of IA32_PASID[19:0], while for ENQCMDS, the PASID is normally read from memory.

If the "PASID translation" VM-execution control is 1, the PASID value identified in the previous paragraph is treated as a **guest PASID**. PASID translation converts this guest PASID to a 20-bit **host PASID**. After this translation, the enqueue store is performed, using the host PASID in place of the guest PASID.

PASID translation is implemented by two hierarchies of data structures (**PASID-translation hierarchies**) configured by a VMM. Guest PASIDs 00000H to 7FFFFH are translated through the low PASID-translation hierarchy, while guest PASIDs 80000 to FFFFFH are translated through the high PASID-translation hierarchy.

The root of each PASID-translation hierarchy is a 4-KByte **PASID directory**. The low PASID directory is located at the low PASID directory address, and the high PASID directory is located at the high PASID directory address (these physical addresses are VM-execution control fields in the VMCS). A PASID directory comprises 512 8-byte entries, each of which has the following format:

- Bit 0 is the entry's present bit. The entry is used only if this bit is 1.
- Bits 11:1 are reserved and must be 0.
- Bits M–1:12 specify the 4-KByte aligned address of a PASID table (see below), where M is the processor's physical-address width.
- Bits 63:M are reserved and must be 0.

A PASID-translation hierarchy also includes up to 512 4-KByte **PASID tables**; each of these is referenced by a PASID directory entry (see above). A PASID table comprises 1024 4-byte entries, each of which has the following format:

- Bits 19:0 are the host PASID specified by the entry.
- Bits 30:20 are reserved and must be 0.
- Bits 31 is the entry's valid bit. The entry is used only if this bit is 1.

When PASID translation is enabled, the guest PASID determined by the instruction (see above) is converted to a host PASID using the following process:

- If bit 19 of guest PASID is clear, the low PASID directory is used; otherwise, the high PASID directory is used.
- Bits 18:10 of the guest PASID select an entry from the PASID directory. A VM exit occurs if the entry's present bit is clear or if any reserved bit is set. Otherwise, bits M:0 of the entry (with bit 0 cleared) contain the physical address of a PASID table.
- Bits 9:0 of the guest PASID select an entry from the PASID table. A VM exit occurs if the entry's valid bit is clear or if any reserved bit is set. Otherwise, bits 19:0 of the entry are the host PASID.

If PASID translation results in a VM exit (due to a present or valid bit being clear, or a reserved bit being set), the instruction does not complete and no enqueue store is performed.

26.6 UNRESTRICTED GUESTS

The first processors to support VMX operation require CR0.PE and CR0.PG to be 1 in VMX operation (see Section 24.8). This restriction implies that guest software cannot be run in unpaged protected mode or in real-address mode. Later processors support a VM-execution control called "unrestricted guest".[1] If this control is 1, CR0.PE and CR0.PG may be 0 in VMX non-root operation. Such processors allow guest software to run in unpaged protected mode or in real-address mode. The following items describe the behavior of such software:

- The MOV CR0 instructions does not cause a general-protection exception simply because it would set either CR0.PE and CR0.PG to 0. See Section 26.3 for details.
- A logical processor treats the values of CR0.PE and CR0.PG in VMX non-root operation just as it does outside VMX operation. Thus, if CR0.PE = 0, the processor operates as it does normally in real-address mode (for example, it uses the 16-bit **interrupt table** to deliver interrupts and exceptions). If CR0.PG = 0, the processor operates as it does normally when paging is disabled.
- Processor operation is modified by the fact that the processor is in VMX non-root operation and by the settings of the VM-execution controls just as it is in protected mode or when paging is enabled. Instructions, interrupts, and exceptions that cause VM exits in protected mode or when paging is enabled also do so in real-address mode or when paging is disabled. The following examples should be noted:
  - If CR0.PG = 0, page faults do not occur and thus cannot cause VM exits.
  - If CR0.PE = 0, invalid-TSS exceptions do not occur and thus cannot cause VM exits.

1. "Unrestricted guest" is a secondary processor-based VM-execution control. If bit 31 of the primary processor-based VM-execution controls is 0, VMX non-root operation functions as if the "unrestricted guest" VM-execution control were 0. See Section 25.6.2.

  - If CR0.PE = 0, the following instructions cause invalid-opcode exceptions and do not cause VM exits: INVEPT, INVVPID, LLDT, LTR, SLDT, STR, VMCLEAR, VMLAUNCH, VMPTRLD, VMPTRST, VMREAD, VMRESUME, VMWRITE, VMXOFF, and VMXON.
- If CR0.PG = 0, each linear address is passed directly to the EPT mechanism for translation to a physical address.[1] The guest memory type passed on to the EPT mechanism is WB (writeback).

1. As noted in Section 27.2.1.1, the "enable EPT" VM-execution control must be 1 if the "unrestricted guest" VM-execution control is 1.

CHAPTER 27
VM ENTRIES

Software can enter VMX non-root operation using either of the VM-entry instructions VMLAUNCH and VMRESUME. VMLAUNCH can be used only with a VMCS whose launch state is clear and VMRESUME can be used only with a VMCS whose the launch state is launched. VMLAUNCH should be used for the first VM entry after VMCLEAR; VMRESUME should be used for subsequent VM entries with the same VMCS.

Each VM entry performs the following steps in the order indicated:

1. Basic checks are performed to ensure that VM entry can commence (Section 27.1).
2. The control and host-state areas of the VMCS are checked to ensure that they are proper for supporting VMX non-root operation and that the VMCS is correctly configured to support the next VM exit (Section 27.2).
3. The following may be performed in parallel or in any order (Section 27.3):
   - The guest-state area of the VMCS is checked to ensure that, after the VM entry completes, the state of the logical processor is consistent with IA-32 and Intel 64 architectures.
   - Processor state is loaded from the guest-state area and based on controls in the VMCS.
   - Address-range monitoring is cleared.
4. MSRs are loaded from the VM-entry MSR-load area (Section 27.4).
5. If VMLAUNCH is being executed, the launch state of the VMCS is set to "launched."
6. If the "Intel PT uses guest physical addresses" VM-execution control is 1, trace-address pre-translation (TAPT) may occur (see Section 26.5.4 and Section 27.5).
7. An event may be injected in the guest context (Section 27.6).

Steps 1–4 above perform checks that may cause VM entry to fail. Such failures occur in one of the following three ways:

- Some of the checks in Section 27.1 may generate ordinary faults (for example, an invalid-opcode exception). Such faults are delivered normally.
- Some of the checks in Section 27.1 and all the checks in Section 27.2 cause control to pass to the instruction following the VM-entry instruction. The failure is indicated by setting RFLAGS.ZF[1] (if there is a current VMCS) or RFLAGS.CF (if there is no current VMCS). If there is a current VMCS, an error number indicating the cause of the failure is stored in the VM-instruction error field. See Chapter 31 for the error numbers.
- The checks in Section 27.3 and Section 27.4 cause processor state to be loaded from the host-state area of the VMCS (as would be done on a VM exit). Information about the failure is stored in the VM-exit information fields. See Section 27.8 for details.

EFLAGS.TF = 1 causes a VM-entry instruction to generate a single-step debug exception only if failure of one of the checks in Section 27.1 and Section 27.2 causes control to pass to the following instruction. A VM-entry does not generate a single-step debug exception in any of the following cases: (1) the instruction generates a fault; (2) failure of one of the checks in Section 27.3 or in loading MSRs causes processor state to be loaded from the host-state area of the VMCS; or (3) the instruction passes all checks in Section 27.1, Section 27.2, and Section 27.3 and there is no failure in loading MSRs.

Section 32.15 describes the dual-monitor treatment of system-management interrupts (SMIs) and system-management mode (SMM). Under this treatment, code running in SMM returns using VM entries instead of the RSM instruction. A VM entry **returns from SMM** if it is executed in SMM and the "entry to SMM" VM-entry control is 0. VM entries that return from SMM differ from ordinary VM entries in ways that are detailed in Section 32.15.4.

1. This chapter uses the notation RAX, RIP, RSP, RFLAGS, etc. for processor registers because most processors that support VMX operation also support Intel 64 architecture. For IA-32 processors, this notation refers to the 32-bit forms of those registers (EAX, EIP, ESP, EFLAGS, etc.). In a few places, notation such as EAX is used to refer specifically to lower 32 bits of the indicated register.

27.1 BASIC VM-ENTRY CHECKS

Before a VM entry commences, the current state of the logical processor is checked in the following order:

1. If the logical processor is in virtual-8086 mode or compatibility mode, an invalid-opcode exception is generated.
2. If the current privilege level (CPL) is not zero, a general-protection exception is generated.
3. If there is no current VMCS, RFLAGS.CF is set to 1 and control passes to the next instruction.
4. If there is a current VMCS but the current VMCS is a shadow VMCS (see Section 25.10), RFLAGS.CF is set to 1 and control passes to the next instruction.
5. If there is a current VMCS that is not a shadow VMCS, the following conditions are evaluated in order; any of these cause VM entry to fail:
   a. if there is MOV-SS blocking (see Table 25-3)
   b. if the VM entry is invoked by VMLAUNCH and the VMCS launch state is not clear
   c. if the VM entry is invoked by VMRESUME and the VMCS launch state is not launched

   If any of these checks fail, RFLAGS.ZF is set to 1 and control passes to the next instruction. An error number indicating the cause of the failure is stored in the VM-instruction error field. See Chapter 31 for the error numbers.

27.2 CHECKS ON VMX CONTROLS AND HOST-STATE AREA

If the checks in Section 27.1 do not cause VM entry to fail, the control and host-state areas of the VMCS are checked to ensure that they are proper for supporting VMX non-root operation, that the VMCS is correctly configured to support the next VM exit, and that, after the next VM exit, the processor's state is consistent with the Intel 64 and IA-32 architectures.

VM entry fails if any of these checks fail. When such failures occur, control is passed to the next instruction, RFLAGS.ZF is set to 1 to indicate the failure, and the VM-instruction error field is loaded with an error number that indicates whether the failure was due to the controls or the host-state area (see Chapter 31).

These checks may be performed in any order. Thus, an indication by error number of one cause (for example, host state) does not imply that there are not also other errors. Different processors may thus give different error numbers for the same VMCS. Some checks prevent establishment of settings (or combinations of settings) that are currently reserved. Future processors may allow such settings (or combinations) and may not perform the corresponding checks. The correctness of software should not rely on VM-entry failures resulting from the checks documented in this section.

The checks on the controls and the host-state area are presented in Section 27.2.1 through Section 27.2.4. These sections reference VMCS fields that correspond to processor state. Unless otherwise stated, these references are to fields in the host-state area.

27.2.1 Checks on VMX Controls

This section identifies VM-entry checks on the VMX control fields.

27.2.1.1 VM-Execution Control Fields

VM entries perform the following checks on the VM-execution control fields:[1]

- Reserved bits in the pin-based VM-execution controls must be set properly. Software may consult the VMX capability MSRs to determine the proper settings (see Appendix A.3.1).

1. If the "activate secondary controls" primary processor-based VM-execution control is 0, VM entry operates as if each secondary processor-based VM-execution control were 0. Similarly, if the "activate tertiary controls" primary processor-based VM-execution control is 0, VM entry operates as if each tertiary processor-based VM-execution control were 0.

- Reserved bits in the primary processor-based VM-execution controls must be set properly. Software may consult the VMX capability MSRs to determine the proper settings (see Appendix A.3.2).
- If the "activate secondary controls" primary processor-based VM-execution control is 1, reserved bits in the secondary processor-based VM-execution controls must be cleared. Software may consult the VMX capability MSRs to determine which bits are reserved (see Appendix A.3.3).

  If the "activate secondary controls" primary processor-based VM-execution control is 0 (or if the processor does not support the 1-setting of that control), no checks are performed on the secondary processor-based VM-execution controls. The logical processor operates as if all the secondary processor-based VM-execution controls were 0.
- If the "activate tertiary controls" primary processor-based VM-execution control is 1, reserved bits in the tertiary processor-based VM-execution controls must be cleared. Software may consult the VMX capability MSRs to determine which bits are reserved (see Appendix A.3.4).

  If the "activate tertiary controls" primary processor-based VM-execution control is 0 (or if the processor does not support the 1-setting of that control), no checks are performed on the tertiary processor-based VM-execution controls. The logical processor operates as if all the tertiary processor-based VM-execution controls were 0.
- The CR3-target count must not be greater than 4. Future processors may support a different number of CR3-target values. Software should read the VMX capability MSR IA32_VMX_MISC to determine the number of values supported (see Appendix A.6).
- If the "use I/O bitmaps" VM-execution control is 1, bits 11:0 of each I/O-bitmap address must be 0. Neither address should set any bits beyond the processor's physical-address width.[1,2]
- If the "use MSR bitmaps" VM-execution control is 1, bits 11:0 of the MSR-bitmap address must be 0. The address should not set any bits beyond the processor's physical-address width.[3]
- If the "use TPR shadow" VM-execution control is 1, the virtual-APIC address must satisfy the following checks:
  - Bits 11:0 of the address must be 0.
  - The address should not set any bits beyond the processor's physical-address width.[4]

  If all of the above checks are satisfied and the "use TPR shadow" VM-execution control is 1, bytes 3:1 of VTPR (see Section 30.1.1) may be cleared (behavior may be implementation-specific).

  The clearing of these bytes may occur even if the VM entry fails. This is true either if the failure causes control to pass to the instruction following the VM-entry instruction or if it causes processor state to be loaded from the host-state area of the VMCS.
- If the "use TPR shadow" VM-execution control is 1 and the "virtual-interrupt delivery" VM-execution control is 0, bits 31:4 of the TPR threshold VM-execution control field must be 0.[5]
- The following check is performed if the "use TPR shadow" VM-execution control is 1 and the "virtualize APIC accesses" and "virtual-interrupt delivery" VM-execution controls are both 0: the value of bits 3:0 of the TPR threshold VM-execution control field should not be greater than the value of bits 7:4 of VTPR (see Section 30.1.1).
- If the "NMI exiting" VM-execution control is 0, the "virtual NMIs" VM-execution control must be 0.
- If the "virtual NMIs" VM-execution control is 0, the "NMI-window exiting" VM-execution control must be 0.
- If the "virtualize APIC-accesses" VM-execution control is 1, the APIC-access address must satisfy the following checks:
  - Bits 11:0 of the address must be 0.

---

1. Software can determine a processor's physical-address width by executing CPUID with 80000008H in EAX. The physical-address width is returned in bits 7:0 of EAX.
2. If IA32_VMX_BASIC[48] is read as 1, these addresses must not set any bits in the range 63:32; see Appendix A.1.
3. If IA32_VMX_BASIC[48] is read as 1, this address must not set any bits in the range 63:32; see Appendix A.1.
4. If IA32_VMX_BASIC[48] is read as 1, this address must not set any bits in the range 63:32; see Appendix A.1.
5. "Virtual-interrupt delivery" is a secondary processor-based VM-execution control. If bit 31 of the primary processor-based VM-execution controls is 0, VM entry functions as if the "virtual-interrupt delivery" VM-execution control were 0. See Section 25.6.2.

  - The address should not set any bits beyond the processor's physical-address width.[1]
- If the "use TPR shadow" VM-execution control is 0, the following VM-execution controls must also be 0: "virtualize x2APIC mode", "APIC-register virtualization", "virtual-interrupt delivery", and "IPI virtualization".[2]
- If the "virtualize x2APIC mode" VM-execution control is 1, the "virtualize APIC accesses" VM-execution control must be 0.
- If the "virtual-interrupt delivery" VM-execution control is 1, the "external-interrupt exiting" VM-execution control must be 1.
- If the "process posted interrupts" VM-execution control is 1, the following must be true:[3]
  - The "virtual-interrupt delivery" VM-execution control is 1.
  - The "acknowledge interrupt on exit" VM-exit control is 1.
  - The posted-interrupt notification vector has a value in the range 0–255 (bits 15:8 are all 0).
  - Bits 5:0 of the posted-interrupt descriptor address are all 0.
  - The posted-interrupt descriptor address does not set any bits beyond the processor's physical-address width.[4]
- If the "IPI virtualization" VM-execution control is 1, the following must be true:
  - Bits 2:0 of the PID-pointer table address are all 0.
  - The PID-pointer table address does not set any bits beyond the processor's physical-address width.
  - The address of the last entry in the PID-pointer table does not set any bits beyond the processor's physical-address width. (This address is the PID-pointer table address plus 8 times the last PID-pointer index.)
- If the "enable VPID" VM-execution control is 1, the value of the VPID VM-execution control field must not be 0000H.[5]
- If the "enable EPT" VM-execution control is 1, the EPTP VM-execution control field (see Table 25-9 in Section 25.6.11) must satisfy the following checks:[6]
  - The EPT memory type (bits 2:0) must be a value supported by the processor as indicated in the IA32_VMX_EPT_VPID_CAP MSR (see Appendix A.10).
  - Bits 5:3 (1 less than the EPT page-walk length) must be 3, indicating an EPT page-walk length of 4; see Section 29.3.2.
  - Bit 6 (enable bit for accessed and dirty flags for EPT) must be 0 if bit 21 of the IA32_VMX_EPT_VPID_CAP MSR (see Appendix A.10) is read as 0, indicating that the processor does not support accessed and dirty flags for EPT.
  - Reserved bits 11:7 and 63:N (where N is the processor's physical-address width) must all be 0.
- The "enable EPT" VM-execution control must be 1 if any of the following VM-execution controls is 1: "enable PML," "unrestricted guest," "mode-based execute control for EPT," "sub-page write permissions for EPT," "Intel PT uses guest physical addresses," "enable HLAT," "EPT paging-write control," or "guest-paging verification."[7]
- If the "enable PML" VM-execution control is 1, the PML address must satisfy the following checks:[8]

---

1. If IA32_VMX_BASIC[48] is read as 1, this address must not set any bits in the range 63:32; see Appendix A.1.
2. "Virtualize x2APIC mode" and "APIC-register virtualization" are secondary processor-based VM-execution controls. If bit 31 of the primary processor-based VM-execution controls is 0, VM entry functions as if these controls were 0. Similarly, "IPI virtualization" is a tertiary processor-based VM-execution control; if bit 17 of the primary processor-based VM-execution controls is 0, VM entry functions as if these controls were 0. See Section 25.6.2.
3. "Process posted interrupts" is a secondary processor-based VM-execution control. If bit 31 of the primary processor-based VM-execution controls is 0, VM entry functions as if the "process posted interrupts" VM-execution control were 0. See Section 25.6.2.
4. If IA32_VMX_BASIC[48] is read as 1, this address must not set any bits in the range 63:32; see Appendix A.1.
5. "Enable VPID" is a secondary processor-based VM-execution control. If bit 31 of the primary processor-based VM-execution controls is 0, VM entry functions as if the "enable VPID" VM-execution control were 0. See Section 25.6.2.
6. "Enable EPT" is a secondary processor-based VM-execution control. If bit 31 of the primary processor-based VM-execution controls is 0, VM entry functions as if the "enable EPT" VM-execution control were 0. See Section 25.6.2.

  - Bits 11:0 of the address must be 0.
  - The address should not set any bits beyond the processor's physical-address width.
- If the "sub-page write permissions for EPT" VM-execution control is 1, the SPPTP VM-execution control field (see Table 25-11 in Section 25.6.22) must satisfy the following checks:[1]
  - Bits 11:0 of the address must be 0.
  - The address should not set any bits beyond the processor's physical-address width.
- If the "enable VM functions" processor-based VM-execution control is 1, reserved bits in the VM-function controls must be clear.[2] Software may consult the VMX capability MSRs to determine which bits are reserved (see Appendix A.11). In addition, the following check is performed based on the setting of bits in the VM-function controls (see Section 25.6.14):
  - If "EPTP switching" VM-function control is 1, the "enable EPT" VM-execution control must also be 1. In addition, the EPTP-list address must satisfy the following checks:
    - Bits 11:0 of the address must be 0.
    - The address must not set any bits beyond the processor's physical-address width.

  If the "enable VM functions" processor-based VM-execution control is 0, no checks are performed on the VM-function controls.
- If the "VMCS shadowing" VM-execution control is 1, the VMREAD-bitmap and VMWRITE-bitmap addresses must each satisfy the following checks:[3]
  - Bits 11:0 of the address must be 0.
  - The address must not set any bits beyond the processor's physical-address width.
- If the "EPT-violation #VE" VM-execution control is 1, the virtualization-exception information address must satisfy the following checks:[4]
  - Bits 11:0 of the address must be 0.
  - The address must not set any bits beyond the processor's physical-address width.
- If the logical processor is operating with Intel PT enabled (if IA32_RTIT_CTL.TraceEn = 1) at the time of VM entry, the "load IA32_RTIT_CTL" VM-entry control must be 0.
- If the "Intel PT uses guest physical addresses" VM-execution control is 1, the "load IA32_RTIT_CTL" VM-entry control and the "clear IA32_RTIT_CTL" VM-exit control must both be 1.[5]
- If the "use TSC scaling" VM-execution control is 1, the TSC-multiplier must not be zero.[6]

---

7. Some of these controls are secondary processor-based VM-execution controls. If bit 31 of the primary processor-based VM-execution controls is 0, VM entry functions as if both these controls were 0. Others are tertiary processor-based VM-execution controls. If bit 17 of the primary processor-based VM-execution controls is 0, VM entry functions as if both these controls were 0. See Section 25.6.2.
8. "Enable PML" is a secondary processor-based VM-execution control. If bit 31 of the primary processor-based VM-execution controls is 0, VM entry functions as if this control were 0. See Section 25.6.2.
1. "Sub-page write permissions for EPT" is a secondary processor-based VM-execution control. If bit 31 of the primary processor-based VM-execution controls is 0, VM entry functions as if this control were 0. See Section 25.6.2.
2. "Enable VM functions" is a secondary processor-based VM-execution control. If bit 31 of the primary processor-based VM-execution controls is 0, VM entry functions as if the "enable VM functions" VM-execution control were 0. See Section 25.6.2.
3. "VMCS shadowing" is a secondary processor-based VM-execution control. If bit 31 of the primary processor-based VM-execution controls is 0, VM entry functions as if the "VMCS shadowing" VM-execution control were 0. See Section 25.6.2.
4. "EPT-violation #VE" is a secondary processor-based VM-execution control. If bit 31 of the primary processor-based VM-execution controls is 0, VM entry functions as if the "EPT-violation #VE" VM-execution control were 0. See Section 25.6.2.
5. "Intel PT uses guest physical addresses" is a secondary processor-based VM-execution control. If bit 31 of the primary processor-based VM-execution controls is 0, VM entry functions as if the "Intel PT uses guest physical addresses" VM-execution control were 0. See Section 25.6.2.
6. "Use TSC scaling" is a secondary processor-based VM-execution control. If bit 31 of the primary processor-based VM-execution controls is 0, VM entry functions as if the "use TSC scaling" VM-execution control were 0. See Section 25.6.2.

- If the "enable HLAT" VM-execution control is 1, the following bits in the HLATP VM-execution control field (see Table 25-12 in Section 25.6.23) must be zero: bits 2:0, bits 11:5, and bits beyond the processor's physical-address width.[1]
- If the "PASID translation" VM-execution control is 1, the low PASID directory address and the high PASID directory address must each satisfy the following checks:[2]
  - Bits 11:0 of the address must be 0.
  - The address must not set any bits beyond the processor's physical-address width.

27.2.1.2 VM-Exit Control Fields

VM entries perform the following checks on the VM-exit control fields.

- Reserved bits in the primary VM-exit controls must be set properly. Software may consult the VMX capability MSRs to determine the proper settings (see Appendix A.4.1).
- If the "activate secondary controls" primary VM-exit control is 1, reserved bits in the secondary VM-exit controls must be cleared. Software may consult the VMX capability MSRs to determine which bits are reserved (see Appendix A.4.2).
- If the "activate secondary controls" primary VM-exit control is 0 (or if the processor does not support the 1-setting of that control), no checks are performed on the secondary VM-exit controls. The logical processor operates as if all the secondary VM-exit controls were 0.
- If the "activate VMX-preemption timer" VM-execution control is 0, the "save VMX-preemption timer value" VM-exit control must also be 0.
- The following checks are performed for the VM-exit MSR-store address if the VM-exit MSR-store count field is non-zero:
  - The lower 4 bits of the VM-exit MSR-store address must be 0. The address should not set any bits beyond the processor's physical-address width.[3]
  - The address of the last byte in the VM-exit MSR-store area should not set any bits beyond the processor's physical-address width. The address of this last byte is VM-exit MSR-store address + (MSR count * 16) – 1. (The arithmetic used for the computation uses more bits than the processor's physical-address width.)

  If IA32_VMX_BASIC[48] is read as 1, neither address should set any bits in the range 63:32; see Appendix A.1.
- The following checks are performed for the VM-exit MSR-load address if the VM-exit MSR-load count field is non-zero:
  - The lower 4 bits of the VM-exit MSR-load address must be 0. The address should not set any bits beyond the processor's physical-address width.
  - The address of the last byte in the VM-exit MSR-load area should not set any bits beyond the processor's physical-address width. The address of this last byte is VM-exit MSR-load address + (MSR count * 16) – 1. (The arithmetic used for the computation uses more bits than the processor's physical-address width.)

  If IA32_VMX_BASIC[48] is read as 1, neither address should set any bits in the range 63:32; see Appendix A.1.

27.2.1.3 VM-Entry Control Fields

VM entries perform the following checks on the VM-entry control fields.

---

1. "Enable HLAT" is a tertiary processor-based VM-execution control. If bit 17 of the primary processor-based VM-execution controls is 0, VM entry functions as if this control were 0. See Section 25.6.2.
2. "PASID translation" is a secondary processor-based VM-execution control. If bit 31 of the primary processor-based VM-execution controls is 0, VM entry functions as if the "PASID translation" VM-execution control were 0. See Section 25.6.2.
3. Software can determine a processor's physical-address width by executing CPUID with 80000008H in EAX. The physical-address width is returned in bits 7:0 of EAX.

- Reserved bits in the VM-entry controls must be set properly. Software may consult the VMX capability MSRs to determine the proper settings (see Appendix A.5).
- Fields relevant to VM-entry event injection must be set properly. These fields are the VM-entry interruption-information field (see Table 25-16 in Section 25.8.3), the VM-entry exception error code, and the VM-entry instruction length. If the valid bit (bit 31) in the VM-entry interruption-information field is 1, the following must hold:
  - The field's interruption type (bits 10:8) is not set to a reserved value. Value 1 is reserved on all logical processors; value 7 (other event) is reserved on logical processors that do not support the 1-setting of the "monitor trap flag" VM-execution control.
  - The field's vector (bits 7:0) is consistent with the interruption type:
    - If the interruption type is non-maskable interrupt (NMI), the vector is 2.
    - If the interruption type is hardware exception, the vector is at most 31.
    - If the interruption type is other event, the vector is 0 (pending MTF VM exit).
  - The field's deliver-error-code bit (bit 11) is 1 if each of the following holds: (1) the interruption type is hardware exception; (2) bit 0 (corresponding to CR0.PE) is set in the CR0 field in the guest-state area; (3) IA32_VMX_BASIC[56] is read as 0 (see Appendix A.1); and (4) the vector indicates one of the following exceptions: #DF (vector 8), #TS (10), #NP (11), #SS (12), #GP (13), #PF (14), or #AC (17).
  - The field's deliver-error-code bit is 0 if any of the following holds: (1) the interruption type is not hardware exception; (2) bit 0 is clear in the CR0 field in the guest-state area; or (3) IA32_VMX_BASIC[56] is read as 0 and the vector is in one of the following ranges: 0–7, 9, 15, 16, or 18–31.
  - Reserved bits in the field (30:12) are 0.
  - If the deliver-error-code bit (bit 11) is 1, bits 31:16 of the VM-entry exception error-code field are 0.
  - If the interruption type is software interrupt, software exception, or privileged software exception, the VM-entry instruction-length field is in the range 0–15. A VM-entry instruction length of 0 is allowed only if IA32_VMX_MISC[30] is read as 1; see Appendix A.6.
- The following checks are performed for the VM-entry MSR-load address if the VM-entry MSR-load count field is non-zero:
  - The lower 4 bits of the VM-entry MSR-load address must be 0. The address should not set any bits beyond the processor's physical-address width.[1]
  - The address of the last byte in the VM-entry MSR-load area should not set any bits beyond the processor's physical-address width. The address of this last byte is VM-entry MSR-load address + (MSR count * 16) – 1. (The arithmetic used for the computation uses more bits than the processor's physical-address width.)

  If IA32_VMX_BASIC[48] is read as 1, neither address should set any bits in the range 63:32; see Appendix A.1.
- If the processor is not in SMM, the "entry to SMM" and "deactivate dual-monitor treatment" VM-entry controls must be 0.
- The "entry to SMM" and "deactivate dual-monitor treatment" VM-entry controls cannot both be 1.

27.2.2 Checks on Host Control Registers, MSRs, and SSP

The following checks are performed on fields in the host-state area that correspond to control registers and MSRs:

- The CR0 field must not set any bit to a value not supported in VMX operation (see Section 24.8).[2]
- The CR4 field must not set any bit to a value not supported in VMX operation (see Section 24.8).
- If bit 23 in the CR4 field (corresponding to CET) is 1, bit 16 in the CR0 field (WP) must also be 1.

1. Software can determine a processor's physical-address width by executing CPUID with 80000008H in EAX. The physical-address width is returned in bits 7:0 of EAX.
2. The bits corresponding to CR0.NW (bit 29) and CR0.CD (bit 30) are never checked because the values of these bits are not changed by VM exit; see Section 28.5.1.

- On processors that support Intel 64 architecture, the CR3 field must be such that bits 63:52 and bits in the range 51:32 beyond the processor's physical-address width must be 0.[1,2]
- On processors that support Intel 64 architecture, the IA32_SYSENTER_ESP field and the IA32_SYSENTER_EIP field must each contain a canonical address.
- If the "load IA32_PERF_GLOBAL_CTRL" VM-exit control is 1, bits reserved in the IA32_PERF_GLOBAL_CTRL MSR must be 0 in the field for that register (see Figure 20-3).
- If the "load IA32_PAT" VM-exit control is 1, the value of the field for the IA32_PAT MSR must be one that could be written by WRMSR without fault at CPL 0. Specifically, each of the 8 bytes in the field must have one of the values 0 (UC), 1 (WC), 4 (WT), 5 (WP), 6 (WB), or 7 (UC-).
- If the "load IA32_EFER" VM-exit control is 1, bits reserved in the IA32_EFER MSR must be 0 in the field for that register. In addition, the values of the LMA and LME bits in the field must each be that of the "host address-space size" VM-exit control.
- If the "load CET state" VM-exit control is 1, the IA32_S_CET field must not set any bits reserved in the IA32_S_CET MSR, and bit 10 (corresponding to SUPPRESS) and bit 11 (TRACKER) in the field cannot both be set.
- If the "load CET state" VM-exit control is 1, bits 1:0 must be 0 in the SSP field.
- If the "load PKRS" VM-exit control is 1, bits 63:32 must be 0 in the IA32_PKRS field.

27.2.3 Checks on Host Segment and Descriptor-Table Registers

The following checks are performed on fields in the host-state area that correspond to segment and descriptor-table registers:

- In the selector field for each of CS, SS, DS, ES, FS, GS, and TR, the RPL (bits 1:0) and the TI flag (bit 2) must be 0.
- The selector fields for CS and TR cannot be 0000H.
- The selector field for SS cannot be 0000H if the "host address-space size" VM-exit control is 0.
- On processors that support Intel 64 architecture, the base-address fields for FS, GS, GDTR, IDTR, and TR must contain canonical addresses.

27.2.4 Checks Related to Address-Space Size

On processors that support Intel 64 architecture, the following checks related to address-space size are performed on VMX controls and fields in the host-state area:

- If the logical processor is outside IA-32e mode (if IA32_EFER.LMA = 0) at the time of VM entry, the following must hold:
  - The "IA-32e mode guest" VM-entry control is 0.
  - The "host address-space size" VM-exit control is 0.
- If the logical processor is in IA-32e mode (if IA32_EFER.LMA = 1) at the time of VM entry, the "host address-space size" VM-exit control must be 1.
- If the "host address-space size" VM-exit control is 0, the following must hold:
  - The "IA-32e mode guest" VM-entry control is 0.
  - Bit 17 of the CR4 field (corresponding to CR4.PCIDE) is 0.
  - Bits 63:32 in the RIP field are 0.
  - If the "load CET state" VM-exit control is 1, bits 63:32 in the IA32_S_CET field and in the SSP field are 0.

1. Software can determine a processor's physical-address width by executing CPUID with 80000008H in EAX. The physical-address width is returned in bits 7:0 of EAX.
2. Bit 63 of the CR3 field in the host-state area must be 0. This is true even though, If CR4.PCIDE = 1, bit 63 of the source operand to MOV to CR3 is used to determine whether cached translation information is invalidated.

- If the "host address-space size" VM-exit control is 1, the following must hold:
  - Bit 5 of the CR4 field (corresponding to CR4.PAE) is 1.
  - The RIP field contains a canonical address.
  - If the "load CET state" VM-exit control is 1, the IA32_S_CET field and the SSP field contain canonical addresses.
- If the "load CET state" VM-exit control is 1, the IA32_INTERRUPT_SSP_TABLE_ADDR field contains a canonical address.

On processors that do not support Intel 64 architecture, checks are performed to ensure that the "IA-32e mode guest" VM-entry control and the "host address-space size" VM-exit control are both 0.

27.3 CHECKING AND LOADING GUEST STATE

If all checks on the VMX controls and the host-state area pass (see Section 27.2), the following operations take place concurrently: (1) the guest-state area of the VMCS is checked to ensure that, after the VM entry completes, the state of the logical processor is consistent with IA-32 and Intel 64 architectures; (2) processor state is loaded from the guest-state area or as specified by the VM-entry control fields; and (3) address-range monitoring is cleared.

Because the checking and the loading occur concurrently, a failure may be discovered only after some state has been loaded. For this reason, the logical processor responds to such failures by loading state from the host-state area, as it would for a VM exit. See Section 27.8.

27.3.1 Checks on the Guest State Area

This section describes checks performed on fields in the guest-state area. These checks may be performed in any order. Some checks prevent establishment of settings (or combinations of settings) that are currently reserved. Future processors may allow such settings (or combinations) and may not perform the corresponding checks. The correctness of software should not rely on VM-entry failures resulting from the checks documented in this section.

The following subsections reference fields that correspond to processor state. Unless otherwise stated, these references are to fields in the guest-state area.

27.3.1.1 Checks on Guest Control Registers, Debug Registers, and MSRs

The following checks are performed on fields in the guest-state area corresponding to control registers, debug registers, and MSRs:

- The CR0 field must not set any bit to a value not supported in VMX operation (see Section 24.8). The following are exceptions:
  - Bit 0 (corresponding to CR0.PE) and bit 31 (PG) are not checked if the "unrestricted guest" VM-execution control is 1.[1]
  - Bit 29 (corresponding to CR0.NW) and bit 30 (CD) are never checked because the values of these bits are not changed by VM entry; see Section 27.3.2.1.
- If bit 31 in the CR0 field (corresponding to PG) is 1, bit 0 in that field (PE) must also be 1.[2]
- The CR4 field must not set any bit to a value not supported in VMX operation (see Section 24.8).
- If bit 23 in the CR4 field (corresponding to CET) is 1, bit 16 in the CR0 field (WP) must also be 1.

1. "Unrestricted guest" is a secondary processor-based VM-execution control. If bit 31 of the primary processor-based VM-execution controls is 0, VM entry functions as if the "unrestricted guest" VM-execution control were 0. See Section 25.6.2.
2. If the capability MSR IA32_VMX_CR0_FIXED0 reports that CR0.PE must be 1 in VMX operation, bit 0 in the CR0 field must be 1 unless the "unrestricted guest" VM-execution control and bit 31 of the primary processor-based VM-execution controls are both 1.

- If the "load debug controls" VM-entry control is 1, bits reserved in the IA32_DEBUGCTL MSR must be 0 in the field for that register. The first processors to support the virtual-machine extensions supported only the 1-setting of this control and thus performed this check unconditionally.
- The following checks are performed on processors that support Intel 64 architecture:
  - If the "IA-32e mode guest" VM-entry control is 1, bit 31 in the CR0 field (corresponding to CR0.PG) and bit 5 in the CR4 field (corresponding to CR4.PAE) must each be 1.[1]
  - If the "IA-32e mode guest" VM-entry control is 0, bit 17 in the CR4 field (corresponding to CR4.PCIDE) must be 0.
  - The CR3 field must be such that bits 63:52 and bits in the range 51:32 beyond the processor's physical-address width are 0.[2,3]
  - If the "load debug controls" VM-entry control is 1, bits 63:32 in the DR7 field must be 0. The first processors to support the virtual-machine extensions supported only the 1-setting of this control and thus performed this check unconditionally (if they supported Intel 64 architecture).
  - The IA32_SYSENTER_ESP field and the IA32_SYSENTER_EIP field must each contain a canonical address.
  - If the "load CET state" VM-entry control is 1, the IA32_S_CET field and the IA32_INTERRUPT_SSP_TABLE_ADDR field must contain canonical addresses.
- If the "load IA32_PERF_GLOBAL_CTRL" VM-entry control is 1, bits reserved in the IA32_PERF_GLOBAL_CTRL MSR must be 0 in the field for that register (see Figure 20-3).
- If the "load IA32_PAT" VM-entry control is 1, the value of the field for the IA32_PAT MSR must be one that could be written by WRMSR without fault at CPL 0. Specifically, each of the 8 bytes in the field must have one of the values 0 (UC), 1 (WC), 4 (WT), 5 (WP), 6 (WB), or 7 (UC-).
- If the "load IA32_EFER" VM-entry control is 1, the following checks are performed on the field for the IA32_EFER MSR:
  - Bits reserved in the IA32_EFER MSR must be 0.
  - Bit 10 (corresponding to IA32_EFER.LMA) must equal the value of the "IA-32e mode guest" VM-entry control. It must also be identical to bit 8 (LME) if bit 31 in the CR0 field (corresponding to CR0.PG) is 1.[4]
- If the "load IA32_BNDCFGS" VM-entry control is 1, the following checks are performed on the field for the IA32_BNDCFGS MSR:
  - Bits reserved in the IA32_BNDCFGS MSR must be 0.
  - The linear address in bits 63:12 must be canonical.
- If the "load IA32_RTIT_CTL" VM-entry control is 1, bits reserved in the IA32_RTIT_CTL MSR must be 0 in the field for that register (see Table 33-6).
- If the "load CET state" VM-entry control is 1, the IA32_S_CET field must not set any bits reserved in the IA32_S_CET MSR, and bit 10 (corresponding to SUPPRESS) and bit 11 (TRACKER) of the field cannot both be set.
- If the "load guest IA32_LBR_CTL" VM-entry control is 1, bits reserved in the IA32_LBR_CTL MSR must be 0 in the field for that register.
- If the "load PKRS" VM-entry control is 1, bits 63:32 must be 0 in the IA32_PKRS field.
- If the "load UINV" VM-entry control is 1, bits 15:8 must be 0 in the guest UINV field.

---

1. If the capability MSR IA32_VMX_CR0_FIXED0 reports that CR0.PG must be 1 in VMX operation, bit 31 in the CR0 field must be 1 unless the "unrestricted guest" VM-execution control and bit 31 of the primary processor-based VM-execution controls are both 1.
2. Software can determine a processor's physical-address width by executing CPUID with 80000008H in EAX. The physical-address width is returned in bits 7:0 of EAX.
3. Bit 63 of the CR3 field in the guest-state area must be 0. This is true even though, If CR4.PCIDE = 1, bit 63 of the source operand to MOV to CR3 is used to determine whether cached translation information is invalidated.
4. If the capability MSR IA32_VMX_CR0_FIXED0 reports that CR0.PG must be 1 in VMX operation, bit 31 in the CR0 field must be 1 unless the "unrestricted guest" VM-execution control and bit 31 of the primary processor-based VM-execution controls are both 1.

27.3.1.2 Checks on Guest Segment Registers

This section specifies the checks on the fields for CS, SS, DS, ES, FS, GS, TR, and LDTR. The following terms are used in defining these checks:

- The guest will be **virtual-8086** if the VM flag (bit 17) is 1 in the RFLAGS field in the guest-state area.
- The guest will be **IA-32e mode** if the "IA-32e mode guest" VM-entry control is 1. (This is possible only on processors that support Intel 64 architecture.)
- Any one of these registers is said to be **usable** if the unusable bit (bit 16) is 0 in the access-rights field for that register.

The following are the checks on these fields:

- Selector fields.
  - TR. The TI flag (bit 2) must be 0.
  - LDTR. If LDTR is usable, the TI flag (bit 2) must be 0.
  - SS. If the guest will not be virtual-8086 and the "unrestricted guest" VM-execution control is 0, the RPL (bits 1:0) must equal the RPL of the selector field for CS.[1]
- Base-address fields.
  - CS, SS, DS, ES, FS, GS. If the guest will be virtual-8086, the address must be the selector field shifted left 4 bits (multiplied by 16).
  - The following checks are performed on processors that support Intel 64 architecture:
    - TR, FS, GS. The address must be canonical.
    - LDTR. If LDTR is usable, the address must be canonical.
    - CS. Bits 63:32 of the address must be zero.
    - SS, DS, ES. If the register is usable, bits 63:32 of the address must be zero.
- Limit fields for CS, SS, DS, ES, FS, GS. If the guest will be virtual-8086, the field must be 0000FFFFH.
- Access-rights fields.
  - CS, SS, DS, ES, FS, GS.
    - If the guest will be virtual-8086, the field must be 000000F3H. This implies the following:
      - Bits 3:0 (Type) must be 3, indicating an expand-up read/write accessed data segment.
      - Bit 4 (S) must be 1.
      - Bits 6:5 (DPL) must be 3.
      - Bit 7 (P) must be 1.
      - Bits 11:8 (reserved), bit 12 (software available), bit 13 (reserved/L), bit 14 (D/B), bit 15 (G), bit 16 (unusable), and bits 31:17 (reserved) must all be 0.
    - If the guest will not be virtual-8086, the different sub-fields are considered separately:
      - Bits 3:0 (Type).
        - CS. The values allowed depend on the setting of the "unrestricted guest" VM-execution control:
          - If the control is 0, the Type must be 9, 11, 13, or 15 (accessed code segment).
          - If the control is 1, the Type must be either 3 (read/write accessed expand-up data segment) or one of 9, 11, 13, and 15 (accessed code segment).
        - SS. If SS is usable, the Type must be 3 or 7 (read/write, accessed data segment).
        - DS, ES, FS, GS. The following checks apply if the register is usable:

1. "Unrestricted guest" is a secondary processor-based VM-execution control. If bit 31 of the primary processor-based VM-execution controls is 0, VM entry functions as if the "unrestricted guest" VM-execution control were 0. See Section 25.6.2.

  - Bit 0 of the Type must be 1 (accessed).
  - If bit 3 of the Type is 1 (code segment), then bit 1 of the Type must be 1 (readable).
- Bit 4 (S). If the register is CS or if the register is usable, S must be 1.
- Bits 6:5 (DPL).
  - CS.
    - If the Type is 3 (read/write accessed expand-up data segment), the DPL must be 0. The Type can be 3 only if the "unrestricted guest" VM-execution control is 1.
    - If the Type is 9 or 11 (non-conforming code segment), the DPL must equal the DPL in the access-rights field for SS.
    - If the Type is 13 or 15 (conforming code segment), the DPL cannot be greater than the DPL in the access-rights field for SS.
  - SS.
    - If the "unrestricted guest" VM-execution control is 0, the DPL must equal the RPL from the selector field.
    - The DPL must be 0 either if the Type in the access-rights field for CS is 3 (read/write accessed expand-up data segment) or if bit 0 in the CR0 field (corresponding to CR0.PE) is 0.[1]
  - DS, ES, FS, GS. The DPL cannot be less than the RPL in the selector field if (1) the "unrestricted guest" VM-execution control is 0; (2) the register is usable; and (3) the Type in the access-rights field is in the range 0 – 11 (data segment or non-conforming code segment).
- Bit 7 (P). If the register is CS or if the register is usable, P must be 1.
- Bits 11:8 (reserved). If the register is CS or if the register is usable, these bits must all be 0.
- Bit 14 (D/B). For CS, D/B must be 0 if the guest will be IA-32e mode and the L bit (bit 13) in the access-rights field is 1.
- Bit 15 (G). The following checks apply if the register is CS or if the register is usable:
  - If any bit in the limit field in the range 11:0 is 0, G must be 0.
  - If any bit in the limit field in the range 31:20 is 1, G must be 1.
- Bits 31:17 (reserved). If the register is CS or if the register is usable, these bits must all be 0.

— TR. The different sub-fields are considered separately:
- Bits 3:0 (Type).
  - If the guest will not be IA-32e mode, the Type must be 3 (16-bit busy TSS) or 11 (32-bit busy TSS).
  - If the guest will be IA-32e mode, the Type must be 11 (64-bit busy TSS).
- Bit 4 (S). S must be 0.
- Bit 7 (P). P must be 1.
- Bits 11:8 (reserved). These bits must all be 0.
- Bit 15 (G).
  - If any bit in the limit field in the range 11:0 is 0, G must be 0.
  - If any bit in the limit field in the range 31:20 is 1, G must be 1.
- Bit 16 (Unusable). The unusable bit must be 0.
- Bits 31:17 (reserved). These bits must all be 0.

1. The following apply if either the "unrestricted guest" VM-execution control or bit 31 of the primary processor-based VM-execution controls is 0: (1) bit 0 in the CR0 field must be 1 if the capability MSR IA32_VMX_CR0_FIXED0 reports that CR0.PE must be 1 in VMX operation; and (2) the Type in the access-rights field for CS cannot be 3.

— LDTR. The following checks on the different sub-fields apply only if LDTR is usable:
  - Bits 3:0 (Type). The Type must be 2 (LDT).
  - Bit 4 (S). S must be 0.
  - Bit 7 (P). P must be 1.
  - Bits 11:8 (reserved). These bits must all be 0.
  - Bit 15 (G).
    — If any bit in the limit field in the range 11:0 is 0, G must be 0.
    — If any bit in the limit field in the range 31:20 is 1, G must be 1.
  - Bits 31:17 (reserved). These bits must all be 0.

27.3.1.3 Checks on Guest Descriptor-Table Registers

The following checks are performed on the fields for GDTR and IDTR:

- On processors that support Intel 64 architecture, the base-address fields must contain canonical addresses.
- Bits 31:16 of each limit field must be 0.

27.3.1.4 Checks on Guest RIP, RFLAGS, and SSP

The following checks are performed on fields in the guest-state area corresponding to RIP, RFLAGS, and SSP (shadow-stack pointer):

- RIP. The following checks are performed on processors that support Intel 64 architecture:
  — Bits 63:32 must be 0 if the "IA-32e mode guest" VM-entry control is 0 or if the L bit (bit 13) in the access-rights field for CS is 0.
  — If the processor supports N < 64 linear-address bits, bits 63:N must be identical if the "IA-32e mode guest" VM-entry control is 1 and the L bit in the access-rights field for CS is 1.[1] (No check applies if the processor supports 64 linear-address bits.) The guest RIP value is not required to be canonical; the value of bit N-1 may differ from that of bit N.
- RFLAGS.
  — Reserved bits 63:22 (bits 31:22 on processors that do not support Intel 64 architecture), bit 15, bit 5 and bit 3 must be 0 in the field, and reserved bit 1 must be 1.
  — The VM flag (bit 17) must be 0 either if the "IA-32e mode guest" VM-entry control is 1 or if bit 0 in the CR0 field (corresponding to CR0.PE) is 0.[2]
  — The IF flag (RFLAGS[bit 9]) must be 1 if the valid bit (bit 31) in the VM-entry interruption-information field is 1 and the interruption type (bits 10:8) is external interrupt.
- SSP. The following checks are performed if the "load CET state" VM-entry control is 1
  — Bits 1:0 must be 0.
  — If the processor supports the Intel 64 architecture, bits 63:N must be identical, where N is the CPU's maximum linear-address width. (This check does not apply if the processor supports 64 linear-address bits.) The guest SSP value is not required to be canonical; the value of bit N-1 may differ from that of bit N.

27.3.1.5 Checks on Guest Non-Register State

The following checks are performed on fields in the guest-state area corresponding to non-register state:

1. Software can determine the number N by executing CPUID with 80000008H in EAX. The number of linear-address bits supported is returned in bits 15:8 of EAX.
2. If the capability MSR IA32_VMX_CR0_FIXED0 reports that CR0.PE must be 1 in VMX operation, bit 0 in the CR0 field must be 1 unless the "unrestricted guest" VM-execution control and bit 31 of the primary processor-based VM-execution controls are both 1.

- Activity state.
  - The activity-state field must contain a value in the range 0 – 3, indicating an activity state supported by the implementation (see Section 25.4.2). Future processors may include support for other activity states. Software should read the VMX capability MSR IA32_VMX_MISC (see Appendix A.6) to determine what activity states are supported.
  - The activity-state field must not indicate the HLT state if the DPL (bits 6:5) in the access-rights field for SS is not 0.[1]
  - The activity-state field must indicate the active state if the interruptibility-state field indicates blocking by either MOV-SS or by STI (if either bit 0 or bit 1 in that field is 1).
  - If the valid bit (bit 31) in the VM-entry interruption-information field is 1, the interruption to be delivered (as defined by interruption type and vector) must not be one that would normally be blocked while a logical processor is in the activity state corresponding to the contents of the activity-state field. The following items enumerate the interruptions (as specified in the VM-entry interruption-information field) whose injection is allowed for the different activity states:
    - Active. Any interruption is allowed.
    - HLT. The only events allowed are the following:
      - Those with interruption type external interrupt or non-maskable interrupt (NMI).
      - Those with interruption type hardware exception and vector 1 (debug exception) or vector 18 (machine-check exception).
      - Those with interruption type other event and vector 0 (pending MTF VM exit).

      See Table 25-16 in Section 25.8.3 for details regarding the format of the VM-entry interruption-information field.
    - Shutdown. Only NMIs and machine-check exceptions are allowed.
    - Wait-for-SIPI. No interruptions are allowed.
  - The activity-state field must not indicate the wait-for-SIPI state if the "entry to SMM" VM-entry control is 1.
- Interruptibility state.
  - The reserved bits (bits 31:5) must be 0.
  - The field cannot indicate blocking by both STI and MOV SS (bits 0 and 1 cannot both be 1).
  - Bit 0 (blocking by STI) must be 0 if the IF flag (bit 9) is 0 in the RFLAGS field.
  - Bit 0 (blocking by STI) and bit 1 (blocking by MOV-SS) must both be 0 if the valid bit (bit 31) in the VM-entry interruption-information field is 1 and the interruption type (bits 10:8) in that field has value 0, indicating external interrupt, or value 2, indicating non-maskable interrupt (NMI).
  - Bit 2 (blocking by SMI) must be 0 if the processor is not in SMM.
  - Bit 2 (blocking by SMI) must be 1 if the "entry to SMM" VM-entry control is 1.
  - Bit 3 (blocking by NMI) must be 0 if the "virtual NMIs" VM-execution control is 1, the valid bit (bit 31) in the VM-entry interruption-information field is 1, and the interruption type (bits 10:8) in that field has value 2 (indicating NMI).
  - If bit 4 (enclave interruption) is 1, bit 1 (blocking by MOV-SS) must be 0 and the processor must support for SGX by enumerating CPUID.(EAX=07H,ECX=0):EBX.SGX[bit 2] as 1.

NOTE

If the "virtual NMIs" VM-execution control is 0, there is no requirement that bit 3 be 0 if the valid bit in the VM-entry interruption-information field is 1 and the interruption type in that field has value 2.

1. As noted in Section 25.4.1, SS.DPL corresponds to the logical processor's current privilege level (CPL).

- Pending debug exceptions.
  - Bits 11:4, bit 13, bit 15, and bits 63:17 (bits 31:17 on processors that do not support Intel 64 architecture) must be 0.
  - The following checks are performed if any of the following holds: (1) the interruptibility-state field indicates blocking by STI (bit 0 in that field is 1); (2) the interruptibility-state field indicates blocking by MOV SS (bit 1 in that field is 1); or (3) the activity-state field indicates HLT:
    - Bit 14 (BS) must be 1 if the TF flag (bit 8) in the RFLAGS field is 1 and the BTF flag (bit 1) in the IA32_DEBUGCTL field is 0.
    - Bit 14 (BS) must be 0 if the TF flag (bit 8) in the RFLAGS field is 0 or the BTF flag (bit 1) in the IA32_DEBUGCTL field is 1.
  - The following checks are performed if bit 16 (RTM) is 1:
    - Bits 11:0, bits 15:13, and bits 63:17 (bits 31:17 on processors that do not support Intel 64 architecture) must be 0; bit 12 must be 1.
    - The processor must support for RTM by enumerating CPUID.(EAX=07H,ECX=0):EBX[bit 11] as 1.
    - The interruptibility-state field must not indicate blocking by MOV SS (bit 1 in that field must be 0).
- VMCS link pointer. The following checks apply if the field contains a value other than FFFFFFFF_FFFFFFFFH:
  - Bits 11:0 must be 0.
  - Bits beyond the processor's physical-address width must be 0.[1,2]
  - The 4 bytes located in memory referenced by the value of the field (as a physical address) must satisfy the following:
    - Bits 30:0 must contain the processor's VMCS revision identifier (see Section 25.2).[3]
    - Bit 31 must contain the setting of the "VMCS shadowing" VM-execution control.[4] This implies that the referenced VMCS is a shadow VMCS (see Section 25.10) if and only if the "VMCS shadowing" VM-execution control is 1.
  - If the processor is not in SMM or the "entry to SMM" VM-entry control is 1, the field must not contain the current VMCS pointer.
  - If the processor is in SMM and the "entry to SMM" VM-entry control is 0, the field must differ from the executive-VMCS pointer.

27.3.1.6 Checks on Guest Page-Directory-Pointer-Table Entries

If CR0.PG =1, CR4.PAE = 1, and IA32_EFER.LME = 0, the logical processor uses **PAE paging** (see Section 4.4 in the *Intel® 64 and IA-32 Architectures Software Developer's Manual, Volume 3A*).[5] When PAE paging is in use, the physical address in CR3 references a table of **page-directory-pointer-table entries** (PDPTEs). A MOV to CR3 when PAE paging is in use checks the validity of the PDPTEs.

A VM entry is to a guest that uses PAE paging if (1) bit 31 (corresponding to CR0.PG) is set in the CR0 field in the guest-state area; (2) bit 5 (corresponding to CR4.PAE) is set in the CR4 field; and (3) the "IA-32e mode guest" VM-entry control is 0. Such a VM entry checks the validity of the PDPTEs:

---

1. Software can determine a processor's physical-address width by executing CPUID with 80000008H in EAX. The physical-address width is returned in bits 7:0 of EAX.
2. If IA32_VMX_BASIC[48] is read as 1, this field must not set any bits in the range 63:32; see Appendix A.1.
3. Earlier versions of this manual specified that the VMCS revision identifier was a 32-bit field. For all processors produced prior to this change, bit 31 of the VMCS revision identifier was 0.
4. "VMCS shadowing" is a secondary processor-based VM-execution control. If bit 31 of the primary processor-based VM-execution controls is 0, VM entry functions as if the "VMCS shadowing" VM-execution control were 0. See Section 25.6.2.
5. On processors that support Intel 64 architecture, the physical-address extension may support more than 36 physical-address bits. Software can determine the number physical-address bits supported by executing CPUID with 80000008H in EAX. The physical-address width is returned in bits 7:0 of EAX.

- If the "enable EPT" VM-execution control is 0, VM entry checks the validity of the PDPTEs referenced by the CR3 field in the guest-state area if either (1) PAE paging was not in use before the VM entry; or (2) the value of CR3 is changing as a result of the VM entry. VM entry may check their validity even if neither (1) nor (2) hold.[1]
- If the "enable EPT" VM-execution control is 1, VM entry checks the validity of the PDPTE fields in the guest-state area (see Section 25.4.2).

A VM entry to a guest that does not use PAE paging does not check the validity of any PDPTEs.

A VM entry that checks the validity of the PDPTEs uses the same checks that are used when CR3 is loaded with MOV to CR3 when PAE paging is in use.[2] If MOV to CR3 would cause a general-protection exception due to the PDPTEs that would be loaded (e.g., because a reserved bit is set), the VM entry fails.

27.3.2 Loading Guest State

Processor state is updated on VM entries in the following ways:

- Some state is loaded from the guest-state area.
- Some state is determined by VM-entry controls.
- The page-directory pointers are loaded based on the values of certain control registers.

This loading may be performed in any order and in parallel with the checking of VMCS contents (see Section 27.3.1).

The loading of guest state is detailed in Section 27.3.2.1 to Section 27.3.2.4. These sections reference VMCS fields that correspond to processor state. Unless otherwise stated, these references are to fields in the guest-state area.

In addition to the state loading described in this section, VM entries may load MSRs from the VM-entry MSR-load area (see Section 27.4). This loading occurs only after the state loading described in this section and the checking of VMCS contents described in Section 27.3.1.

27.3.2.1 Loading Guest Control Registers, Debug Registers, and MSRs

The following items describe how guest control registers, debug registers, and MSRs are loaded on VM entry:

- CR0 is loaded from the CR0 field with the exception of the following bits, which are never modified on VM entry: ET (bit 4); reserved bits 15:6, 17, and 28:19; NW (bit 29) and CD (bit 30).[3] The values of these bits in the CR0 field are ignored.
- CR3 and CR4 are loaded from the CR3 field and the CR4 field, respectively.
- If the "load debug controls" VM-entry control is 1, DR7 is loaded from the DR7 field with the exception that bit 12 and bits 15:14 are always 0 and bit 10 is always 1. The values of these bits in the DR7 field are ignored.

  The first processors to support the virtual-machine extensions supported only the 1-setting of the "load debug controls" VM-entry control and thus always loaded DR7 from the DR7 field.
- The following describes how certain MSRs are loaded using fields in the guest-state area:
  - If the "load debug controls" VM-entry control is 1, the IA32_DEBUGCTL MSR is loaded from the IA32_DEBUGCTL field. The first processors to support the virtual-machine extensions supported only the 1-setting of this control and thus always loaded the IA32_DEBUGCTL MSR from the IA32_DEBUGCTL field.
  - The IA32_SYSENTER_CS MSR is loaded from the IA32_SYSENTER_CS field. Since this field has only 32 bits, bits 63:32 of the MSR are cleared to 0.

1. "Enable EPT" is a secondary processor-based VM-execution control. If bit 31 of the primary processor-based VM-execution controls is 0, VM entry functions as if the "enable EPT" VM-execution control were 0. See Section 25.6.2.
2. This implies that (1) bits 11:9 in each PDPTE are ignored; and (2) if bit 0 (present) is clear in one of the PDPTEs, bits 63:1 of that PDPTE are ignored.
3. Bits 15:6, bit 17, and bit 28:19 of CR0 and CR0.ET are unchanged by executions of MOV to CR0. Bits 15:6, bit 17, and bit 28:19 of CR0 are always 0 and CR0.ET is always 1.

— The IA32_SYSENTER_ESP and IA32_SYSENTER_EIP MSRs are loaded from the IA32_SYSENTER_ESP field and the IA32_SYSENTER_EIP field, respectively. On processors that do not support Intel 64 architecture, these fields have only 32 bits; bits 63:32 of the MSRs are cleared to 0.

— The following are performed on processors that support Intel 64 architecture:

  • The MSRs FS.base and GS.base are loaded from the base-address fields for FS and GS, respectively (see Section 27.3.2.2).

  • If the "load IA32_EFER" VM-entry control is 0, bits in the IA32_EFER MSR are modified as follows:

    — IA32_EFER.LMA is loaded with the setting of the "IA-32e mode guest" VM-entry control.

    — If CR0 is being loaded so that CR0.PG = 1, IA32_EFER.LME is also loaded with the setting of the "IA-32e mode guest" VM-entry control.[1] Otherwise, IA32_EFER.LME is unmodified.

  See below for the case in which the "load IA32_EFER" VM-entry control is 1

— If the "load IA32_PERF_GLOBAL_CTRL" VM-entry control is 1, the IA32_PERF_GLOBAL_CTRL MSR is loaded from the IA32_PERF_GLOBAL_CTRL field.

— If the "load IA32_PAT" VM-entry control is 1, the IA32_PAT MSR is loaded from the IA32_PAT field.

— If the "load IA32_EFER" VM-entry control is 1, the IA32_EFER MSR is loaded from the IA32_EFER field.

— If the "load IA32_BNDCFGS" VM-entry control is 1, the IA32_BNDCFGS MSR is loaded from the IA32_BNDCFGS field.

— If the "load IA32_RTIT_CTL" VM-entry control is 1, the IA32_RTIT_CTL MSR is loaded from the IA32_RTIT_CTL field.

— If the "load CET" VM-entry control is 1, the IA32_S_CET and IA32_INTERRUPT_SSP_TABLE_ADDR MSRs are loaded from the IA32_S_CET field and the IA32_INTERRUPT_SSP_TABLE_ADDR field, respectively. On processors that do not support Intel 64 architecture, these fields have only 32 bits; bits 63:32 of the MSRs are cleared to 0.

— If the "load guest IA32_LBR_CTL" VM-entry control is 1, the IA32_LBR_CTL MSR is loaded from the IA32_LBR_CTL guest state field.

— If the "load PKRS" VM-entry control is 1, the IA32_PKRS MSR is loaded from the IA32_PKRS field.

With the exception of FS.base and GS.base, any of these MSRs is subsequently overwritten if it appears in the VM-entry MSR-load area. See Section 27.4.

- The SMBASE register is unmodified by all VM entries except those that return from SMM.

27.3.2.2 Loading Guest Segment Registers and Descriptor-Table Registers

For each of CS, SS, DS, ES, FS, GS, TR, and LDTR, fields are loaded from the guest-state area as follows:

- The unusable bit is loaded from the access-rights field. This bit can never be set for TR (see Section 27.3.1.2). If it is set for one of the other registers, the following apply:

  — For each of CS, SS, DS, ES, FS, and GS, uses of the segment cause faults (general-protection exception or stack-fault exception) outside 64-bit mode, just as they would had the segment been loaded using a null selector. This bit does not cause accesses to fault in 64-bit mode.

  — If this bit is set for LDTR, uses of LDTR cause general-protection exceptions in all modes, just as they would had LDTR been loaded using a null selector.

  If this bit is clear for any of CS, SS, DS, ES, FS, GS, TR, and LDTR, a null selector value does not cause a fault (general-protection exception or stack-fault exception).

- TR. The selector, base, limit, and access-rights fields are loaded.

1. If the capability MSR IA32_VMX_CR0_FIXED0 reports that CR0.PG must be 1 in VMX operation, VM entry must be loading CR0 so that CR0.PG = 1 unless the "unrestricted guest" VM-execution control and bit 31 of the primary processor-based VM-execution controls are both 1.

- CS.
  - The following fields are always loaded: selector, base address, limit, and (from the access-rights field) the L, D, and G bits.
  - For the other fields, the unusable bit of the access-rights field is consulted:
    - If the unusable bit is 0, all of the access-rights field is loaded.
    - If the unusable bit is 1, the remainder of CS access rights are undefined after VM entry.
- SS, DS, ES, FS, GS, and LDTR.
  - The selector fields are loaded.
  - For the other fields, the unusable bit of the corresponding access-rights field is consulted:
    - If the unusable bit is 0, the base-address, limit, and access-rights fields are loaded.
    - If the unusable bit is 1, the base address, the segment limit, and the remainder of the access rights are undefined after VM entry with the following exceptions:
      - Bits 3:0 of the base address for SS are cleared to 0.
      - SS.DPL is always loaded from the SS access-rights field. This will be the current privilege level (CPL) after the VM entry completes.
      - SS.B is always set to 1.
      - The base addresses for FS and GS are loaded from the corresponding fields in the VMCS. On processors that support Intel 64 architecture, the values loaded for base addresses for FS and GS are also manifest in the FS.base and GS.base MSRs.
      - On processors that support Intel 64 architecture, the base address for LDTR is set to an undefined but canonical value.
      - On processors that support Intel 64 architecture, bits 63:32 of the base addresses for SS, DS, and ES are cleared to 0.

GDTR and IDTR are loaded using the base and limit fields.

27.3.2.3 Loading Guest RIP, RSP, RFLAGS, and SSP

RSP, RIP, and RFLAGS are loaded from the RSP field, the RIP field, and the RFLAGS field, respectively.

If the "load CET" VM-entry control is 1, SSP (shadow-stack pointer) is loaded from the SSP field.

The following items regard the upper 32 bits of these fields on VM entries that are not to 64-bit mode:

- Bits 63:32 of RSP are undefined outside 64-bit mode. Thus, a logical processor may ignore the contents of bits 63:32 of the RSP field on VM entries that are not to 64-bit mode.
- As noted in Section 27.3.1.4, bits 63:32 of the RIP and RFLAGS fields must be 0 on VM entries that are not to 64-bit mode. (The same is true for SSP for VM entries that are not to 64-bit mode when the "load CET" VM-entry control is 1.)

27.3.2.4 Loading Page-Directory-Pointer-Table Entries

As noted in Section 27.3.1.6, the logical processor uses PAE paging if CR0.PG = 1, CR4.PAE = 1, and IA32_EFER.LME = 0. A VM entry to a guest that uses PAE paging loads the PDPTEs into internal, non-architectural registers based on the setting of the "enable EPT" VM-execution control:

- If the control is 0, the PDPTEs are loaded from the page-directory-pointer table referenced by the physical address in the value of CR3 being loaded by the VM entry (see Section 27.3.2.1). The values loaded are treated as physical addresses in VMX non-root operation.
- If the control is 1, the PDPTEs are loaded from corresponding fields in the guest-state area (see Section 25.4.2). The values loaded are treated as guest-physical addresses in VMX non-root operation.

27.3.2.5 Updating Non-Register State

Section 29.4 describes how the VMX architecture controls how a logical processor manages information in the TLBs and paging-structure caches. The following items detail how VM entries invalidate cached mappings:

- If the "enable VPID" VM-execution control is 0, the logical processor invalidates linear mappings and combined mappings associated with VPID 0000H (for all PCIDs); combined mappings for VPID 0000H are invalidated for all EP4TA values (EP4TA is the value of bits 51:12 of EPTP).
- VM entries are not required to invalidate any guest-physical mappings, nor are they required to invalidate any linear mappings or combined mappings if the "enable VPID" VM-execution control is 1.

If the "virtual-interrupt delivery" VM-execution control is 1, VM entry loads the values of RVI and SVI from the guest interrupt-status field in the VMCS (see Section 25.4.2). After doing so, the logical processor first causes PPR virtualization (Section 30.1.3) and then evaluates pending virtual interrupts (Section 30.2.1).

If a virtual interrupt is recognized, it may be delivered in VMX non-root operation immediately after VM entry (including any specified event injection) completes; see Section 27.7.5. See Section 30.2.2 for details regarding the delivery of virtual interrupts.

27.3.3 Clearing Address-Range Monitoring

The Intel 64 and IA-32 architectures allow software to monitor a specified address range using the MONITOR and MWAIT instructions. See Section 9.10.4 in the *Intel® 64 and IA-32 Architectures Software Developer's Manual, Volume 3A*. VM entries clear any address-range monitoring that may be in effect.

27.4 LOADING MSRS

VM entries may load MSRs from the VM-entry MSR-load area (see Section 25.8.2). Specifically each entry in that area (up to the number specified in the VM-entry MSR-load count) is processed in order by loading the MSR indexed by bits 31:0 with the contents of bits 127:64 as they would be written by WRMSR.[1]

Processing of an entry fails in any of the following cases:

- The value of bits 31:0 is either C0000100H (the IA32_FS_BASE MSR) or C0000101 (the IA32_GS_BASE MSR).
- The value of bits 31:8 is 000008H, meaning that the indexed MSR is one that allows access to an APIC register when the local APIC is in x2APIC mode.
- The value of bits 31:0 indicates an MSR that can be written only in system-management mode (SMM) and the VM entry did not commence in SMM. (IA32_SMM_MONITOR_CTL is an MSR that can be written only in SMM.)
- The value of bits 31:0 indicates an MSR that cannot be loaded on VM entries for model-specific reasons. A processor may prevent loading of certain MSRs even if they can normally be written by WRMSR. Such model-specific behavior is documented in Chapter 2, "Model-Specific Registers (MSRs)" in the *Intel® 64 and IA-32 Architectures Software Developer's Manual, Volume 4*.
- Bits 63:32 are not all 0.
- An attempt to write bits 127:64 to the MSR indexed by bits 31:0 of the entry would cause a general-protection exception if executed via WRMSR with CPL = 0.[2]

The VM entry fails if processing fails for any entry. The logical processor responds to such failures by loading state from the host-state area, as it would for a VM exit. See Section 27.8.

If any MSR is being loaded in such a way that would architecturally require a TLB flush, the TLBs are updated so that, after VM entry, the logical processor will not use any translations that were cached before the transition.

---

1. Because attempts to modify the value of IA32_EFER.LMA by WRMSR are ignored, attempts to modify it using the VM-entry MSR-load area are also ignored.
2. If CR0.PG = 1, WRMSR to the IA32_EFER MSR causes a general-protection exception if it would modify the LME bit. If VM entry has established CR0.PG = 1, the IA32_EFER MSR should not be included in the VM-entry MSR-load area for the purpose of modifying the LME bit.

27.5 TRACE-ADDRESS PRE-TRANSLATION (TAPT)

When the "Intel PT uses guest physical addresses" VM-execution control is 1, the addresses used by Intel PT are treated as guest-physical addresses, and these are translated to physical addresses using EPT.

VM entry uses **trace-address pre-translation** (**TAPT**) to prevent buffered trace data from being lost due to an EPT violation; see Section 26.5.4.2. VM entry uses TAPT only if Intel PT will be enabled following VM entry (IA32_RTIT_CTL.TraceEn = 1) and only if the "Intel PT uses guest physical addresses" VM-execution control is 1

As noted in Section 26.5.4, TAPT may cause a VM exit due to an EPT violation, EPT misconfiguration, page-modification log-full event, or APIC access. If such a VM exit occurs as a result of TAPT during VM entry, the VM exit operates as if it had occurred in VMX non-root operation after the VM entry completed (in the guest context).

If TAPT during VM entry causes a VM exit, the VM entry does not perform event injection (Section 27.6), even if the valid bit in the VM-entry interruption-information field is 1. Such VM exits save the contents of VM-entry interruption-information and VM-entry exception error code fields into the IDT-vectoring information and IDT-vectoring error code fields, respectively.

27.6 EVENT INJECTION

If the valid bit in the VM-entry interruption-information field (see Section 25.8.3) is 1, VM entry causes an event to be delivered (or made pending) after all components of guest state have been loaded (including MSRs) and after the VM-execution control fields have been established.

- If the interruption type in the field is 0 (external interrupt), 2 (non-maskable interrupt); 3 (hardware exception), 4 (software interrupt), 5 (privileged software exception), or 6 (software exception), the event is delivered as described in Section 27.6.1.
- If the interruption type in the field is 7 (other event) and the vector field is 0, an MTF VM exit is pending after VM entry. See Section 27.6.2.

27.6.1 Vectored-Event Injection

VM entry delivers an injected vectored event within the guest context established by VM entry. This means that delivery occurs after all components of guest state have been loaded (including MSRs) and after the VM-execution control fields have been established.[1] The event is delivered using the vector in that field to select a descriptor in the IDT. Since event injection occurs after loading IDTR from the guest-state area, this is the guest IDT.

Section 27.6.1.1 provides details of vectored-event injection. In general, the event is delivered exactly as if it had been generated normally.

An exception is made if the following all hold: bit 25 (UINTR) is set to 1 in the guest CR4 field and the "IA-32e mode guest" VM-entry control is 1, and VM entry is modified if it is injecting an external interrupt whose vector is the value that UINV would have after VM entry. In this case, the logical processor then performs user-interrupt notification processing as specified in Section 7.5.2 instead of the process described in Section 27.6.1.1. (If the guest activity-state field indicated the HLT state, the logical processor enters the HLT state following user-interrupt notification processing.)

If event delivery (or user-interrupt notification processing; see above) encounters a nested exception (for example, a general-protection exception because the vector indicates a descriptor beyond the IDT limit), the exception bitmap is consulted using the vector of that exception:

- If the bit for the nested exception is 0, the nested exception is delivered normally. If the nested exception is benign, it is delivered through the IDT. If it is contributory or a page fault, a double fault may be generated, depending on the nature of the event whose delivery encountered the nested exception. See Chapter 6, "Interrupt 8—Double Fault Exception (#DF)" in *Intel® 64 and IA-32 Architectures Software Developer's Manual, Volume 3A*.[2]

1. This does not imply that injection of an exception or interrupt will cause a VM exit due to the settings of VM-execution control fields (such as the exception bitmap) that would cause a VM exit if the event had occurred in VMX non-root operation. In contrast, a nested exception encountered during event delivery may cause a VM exit; see Section 27.6.1.1.

- If the bit for the nested exception is 1, a VM exit occurs. Section 27.6.1.2 details cases in which event injection causes a VM exit.

27.6.1.1 Details of Vectored-Event Injection

The event-injection process is controlled by the contents of the VM-entry interruption information field (format given in Table 25-16), the VM-entry exception error-code field, and the VM-entry instruction-length field. The following items provide details of the process:

- The value pushed on the stack for RFLAGS is generally that which was loaded from the guest-state area. The value pushed for the RF flag is not modified based on the type of event being delivered. However, the pushed value of RFLAGS may be modified if a software interrupt is being injected into a guest that will be in virtual-8086 mode (see below). After RFLAGS is pushed on the stack, the value in the RFLAGS register is modified as is done normally when delivering an event through the IDT.
- The instruction pointer that is pushed on the stack depends on the type of event and whether nested exceptions occur during its delivery. The term **current guest RIP** refers to the value to be loaded from the guest-state area. The value pushed is determined as follows:[1]
  - If VM entry successfully injects (with no nested exception) an event with interruption type external interrupt, NMI, or hardware exception, the current guest RIP is pushed on the stack.
  - If VM entry successfully injects (with no nested exception) an event with interruption type software interrupt, privileged software exception, or software exception, the current guest RIP is incremented by the VM-entry instruction length before being pushed on the stack.
  - If VM entry encounters an exception while injecting an event and that exception does not cause a VM exit, the current guest RIP is pushed on the stack regardless of event type or VM-entry instruction length. If the encountered exception does cause a VM exit that saves RIP, the saved RIP is current guest RIP.
- If the deliver-error-code bit (bit 11) is set in the VM-entry interruption-information field, the contents of the VM-entry exception error-code field is pushed on the stack as an error code would be pushed during delivery of an exception.
- DR6, DR7, and the IA32_DEBUGCTL MSR are not modified by event injection, even if the event has vector 1 (normal deliveries of debug exceptions, which have vector 1, do update these registers).
- If VM entry is injecting a software interrupt and the guest will be in virtual-8086 mode (RFLAGS.VM = 1), no general-protection exception can occur due to RFLAGS.IOPL < 3. A VM monitor should check RFLAGS.IOPL before injecting such an event and, if desired, inject a general-protection exception instead of a software interrupt.
- If VM entry is injecting a software interrupt and the guest will be in virtual-8086 mode with virtual-8086 mode extensions (RFLAGS.VM = CR4.VME = 1), event delivery is subject to VME-based interrupt redirection based on the software interrupt redirection bitmap in the task-state segment (TSS) as follows:
  - If bit *n* in the bitmap is clear (where *n* is the number of the software interrupt), the interrupt is directed to an 8086 program interrupt handler: the processor uses a 16-bit interrupt-vector table (IVT) located at linear address zero. If the value of RFLAGS.IOPL is less than 3, the following modifications are made to the value of RFLAGS that is pushed on the stack: IOPL is set to 3, and IF is set to the value of VIF.
  - If bit *n* in the bitmap is set (where *n* is the number of the software interrupt), the interrupt is directed to a protected-mode interrupt handler. (In other words, the injection is treated as described in the next item.) In this case, the software interrupt does not invoke such a handler if RFLAGS.IOPL < 3 (a general-protection exception occurs instead). However, as noted above, RFLAGS.IOPL cannot cause an injected software interrupt to cause such a exception. Thus, in this case, the injection invokes a protected-mode interrupt handler independent of the value of RFLAGS.IOPL.

  Injection of events of other types are not subject to this redirection.

---

2. Hardware exceptions with the following unused vectors are considered benign: 15 and 21–31. A hardware exception with vector 20 is considered benign unless the processor supports the 1-setting of the "EPT-violation #VE" VM-execution control; in that case, it has the same severity as page faults.

1. While these items refer to RIP, the width of the value pushed (16 bits, 32 bits, or 64 bits) is determined normally.

- If VM entry is injecting a software interrupt (not redirected as described above) or software exception, privilege checking is performed on the IDT descriptor being accessed as would be the case for executions of INT *n*, INT3, or INTO (the descriptor's DPL cannot be less than CPL). There is no checking of RFLAGS.IOPL, even if the guest will be in virtual-8086 mode. Failure of this check may lead to a nested exception. Injection of an event with interruption type external interrupt, NMI, hardware exception, and privileged software exception, or with interruption type software interrupt and being redirected as described above, do not perform these checks.
- If VM entry is injecting a non-maskable interrupt (NMI) and the "virtual NMIs" VM-execution control is 1, virtual-NMI blocking is in effect after VM entry.
- The transition causes a last-branch record to be logged if the LBR bit is set in the IA32_DEBUGCTL MSR. This is true even for events such as debug exceptions, which normally clear the LBR bit before delivery.
- The last-exception record MSRs (LERs) may be updated based on the setting of the LBR bit in the IA32_DEBUGCTL MSR. Events such as debug exceptions, which normally clear the LBR bit before they are delivered, and therefore do not normally update the LERs, may do so as part of VM-entry event injection.
- If injection of an event encounters a nested exception, the value of the EXT bit (bit 0) in any error code for that nested exception is determined as follows:
  - If event being injected has interruption type external interrupt, NMI, hardware exception, or privileged software exception and encounters a nested exception (but does not produce a double fault), the error code for that exception sets the EXT bit.
  - If event being injected is a software interrupt or a software exception and encounters a nested exception, the error code for that exception clears the EXT bit.
  - If event delivery encounters a nested exception and delivery of that exception encounters another exception (but does not produce a double fault), the error code for that exception sets the EXT bit.
  - If a double fault is produced, the error code for the double fault is 0000H (the EXT bit is clear).

27.6.1.2 VM Exits During Event Injection

An event being injected never causes a VM exit directly regardless of the settings of the VM-execution controls. For example, setting the "NMI exiting" VM-execution control to 1 does not cause a VM exit due to injection of an NMI.

However, the event-delivery process may lead to a VM exit:

- If the vector in the VM-entry interruption-information field identifies a task gate in the IDT, the attempted task switch may cause a VM exit just as it would had the injected event occurred during normal execution in VMX non-root operation (see Section 26.4.2).
- If event delivery encounters a nested exception, a VM exit may occur depending on the contents of the exception bitmap (see Section 26.2).
- If event delivery generates a double-fault exception (due to a nested exception); the logical processor encounters another nested exception while attempting to call the double-fault handler; and that exception does not cause a VM exit due to the exception bitmap; then a VM exit occurs due to triple fault (see Section 26.2).
- If event delivery injects a double-fault exception and encounters a nested exception that does not cause a VM exit due to the exception bitmap, then a VM exit occurs due to triple fault (see Section 26.2).
- If the "virtualize APIC accesses" VM-execution control is 1 and event delivery generates an access to the APIC-access page, that access is treated as described in Section 30.4 and may cause a VM exit.[1]

If the event-delivery process does cause a VM exit, the processor state before the VM exit is determined just as it would be had the injected event occurred during normal execution in VMX non-root operation. If the injected event directly accesses a task gate that cause a VM exit or if the first nested exception encountered causes a VM exit, information about the injected event is saved in the IDT-vectoring information field (see Section 28.2.4).

The material in this section applies also if injection of an external interrupt results in user-interrupt notification processing instead of event delivery (see Section 27.6.1 earlier).

1. "Virtualize APIC accesses" is a secondary processor-based VM-execution control. If bit 31 of the primary processor-based VM-execution controls is 0, VM entry functions as if the "virtualize APIC accesses" VM-execution control were 0. See Section 25.6.2.

27.6.1.3 Event Injection for VM Entries to Real-Address Mode

If VM entry is loading CR0.PE with 0, any injected vectored event is delivered as would normally be done in real-address mode.[1] Specifically, VM entry uses the vector provided in the VM-entry interruption-information field to select a 4-byte entry from an interrupt-vector table at the linear address in IDTR.base. Further details are provided in Section 15.1.4 in Volume 3A of the *IA-32 Intel® Architecture Software Developer's Manual*.

Because bit 11 (deliver error code) in the VM-entry interruption-information field must be 0 if CR0.PE will be 0 after VM entry (see Section 27.2.1.3), vectored events injected with CR0.PE = 0 do not push an error code on the stack. This is consistent with event delivery in real-address mode.

If event delivery encounters a fault (due to a violation of IDTR.limit or of SS.limit), the fault is treated as if it had occurred during event delivery in VMX non-root operation. Such a fault may lead to a VM exit as discussed in Section 27.6.1.2.

27.6.2 Injection of Pending MTF VM Exits

If the interruption type in the VM-entry interruption-information field is 7 (other event) and the vector field is 0, VM entry causes an MTF VM exit to be pending on the instruction boundary following VM entry. This is the case even if the "monitor trap flag" VM-execution control is 0. See Section 26.5.2 for the treatment of pending MTF VM exits.

27.7 SPECIAL FEATURES OF VM ENTRY

This section details a variety of features of VM entry. It uses the following terminology: a VM entry is **vectoring** if the valid bit (bit 31) of the VM-entry interruption information field is 1 and the interruption type in the field is 0 (external interrupt), 2 (non-maskable interrupt); 3 (hardware exception), 4 (software interrupt), 5 (privileged software exception), or 6 (software exception).

27.7.1 Interruptibility State

The interruptibility-state field in the guest-state area (see Table 25-3) contains bits that control blocking by STI, blocking by MOV SS, and blocking by NMI. This field impacts event blocking after VM entry as follows:

- If the VM entry is vectoring, there is no blocking by STI or by MOV SS following the VM entry, regardless of the contents of the interruptibility-state field.
- If the VM entry is not vectoring, the following apply:
  - Events are blocked by STI if and only if bit 0 in the interruptibility-state field is 1. This blocking is cleared after the guest executes one instruction or incurs an exception (including a debug exception made pending by VM entry; see Section 27.7.3).
  - Events are blocked by MOV SS if and only if bit 1 in the interruptibility-state field is 1. This may affect the treatment of pending debug exceptions; see Section 27.7.3. This blocking is cleared after the guest executes one instruction or incurs an exception (including a debug exception made pending by VM entry).
- The blocking of non-maskable interrupts (NMIs) is determined as follows:
  - If the "virtual NMIs" VM-execution control is 0, NMIs are blocked if and only if bit 3 (blocking by NMI) in the interruptibility-state field is 1. If the "NMI exiting" VM-execution control is 0, execution of the IRET instruction removes this blocking (even if the instruction generates a fault). If the "NMI exiting" control is 1, IRET does not affect this blocking.
  - The following items describe the use of bit 3 (blocking by NMI) in the interruptibility-state field if the "virtual NMIs" VM-execution control is 1:

1. If the capability MSR IA32_VMX_CR0_FIXED0 reports that CR0.PE must be 1 in VMX operation, VM entry must be loading CR0.PE with 1 unless the "unrestricted guest" VM-execution control and bit 31 of the primary processor-based VM-execution controls are both 1.

- The bit's value does not affect the blocking of NMIs after VM entry. NMIs are not blocked in VMX non-root operation (except for ordinary blocking for other reasons, such as by the MOV SS instruction, the wait-for-SIPI state, etc.)
- The bit's value determines whether there is virtual-NMI blocking after VM entry. If the bit is 1, virtual-NMI blocking is in effect after VM entry. If the bit is 0, there is no virtual-NMI blocking after VM entry unless the VM entry is injecting an NMI (see Section 27.6.1.1). Execution of IRET removes virtual-NMI blocking (even if the instruction generates a fault).

If the "NMI exiting" VM-execution control is 0, the "virtual NMIs" control must be 0; see Section 27.2.1.1.

- Blocking of system-management interrupts (SMIs) is determined as follows:
  - If the VM entry was not executed in system-management mode (SMM), SMI blocking is unchanged by VM entry.
  - If the VM entry was executed in SMM, SMIs are blocked after VM entry if and only if the bit 2 in the interruptibility-state field is 1.

27.7.2 Activity State

The activity-state field in the guest-state area controls whether, after VM entry, the logical processor is active or in one of the inactive states identified in Section 25.4.2. The use of this field is determined as follows:

- If the VM entry is vectoring, the logical processor is in the active state after VM entry. While the consistency checks described in Section 27.3.1.5 on the activity-state field do apply in this case, the contents of the activity-state field do not determine the activity state after VM entry.
- If the VM entry is not vectoring, the logical processor ends VM entry in the activity state specified in the guest-state area. If VM entry ends with the logical processor in an inactive activity state, the VM entry generates any special bus cycle that is normally generated when that activity state is entered from the active state. If VM entry would end with the logical processor in the shutdown state and the logical processor is in SMX operation,[1] an Intel® TXT shutdown condition occurs. The error code used is 0000H, indicating "legacy shutdown." See *Intel® Trusted Execution Technology Preliminary Architecture Specification*.
- Some activity states unconditionally block certain events. The following blocking is in effect after any VM entry that puts the processor in the indicated state:
  - The active state blocks start-up IPIs (SIPIs). SIPIs that arrive while a logical processor is in the active state and in VMX non-root operation are discarded and do not cause VM exits.
  - The HLT state blocks start-up IPIs (SIPIs). SIPIs that arrive while a logical processor is in the HLT state and in VMX non-root operation are discarded and do not cause VM exits.
  - The shutdown state blocks external interrupts and SIPIs. External interrupts that arrive while a logical processor is in the shutdown state and in VMX non-root operation do not cause VM exits even if the "external-interrupt exiting" VM-execution control is 1. SIPIs that arrive while a logical processor is in the shutdown state and in VMX non-root operation are discarded and do not cause VM exits.
  - The wait-for-SIPI state blocks external interrupts, non-maskable interrupts (NMIs), INIT signals, and system-management interrupts (SMIs). Such events do not cause VM exits if they arrive while a logical processor is in the wait-for-SIPI state and in VMX non-root operation.

27.7.3 Delivery of Pending Debug Exceptions after VM Entry

The pending debug exceptions field in the guest-state area indicates whether there are debug exceptions that have not yet been delivered (see Section 25.4.2). This section describes how these are treated on VM entry.

There are no pending debug exceptions after VM entry if any of the following are true:

- The VM entry is vectoring with one of the following interruption types: external interrupt, non-maskable interrupt (NMI), hardware exception, or privileged software exception.

1. A logical processor is in SMX operation if GETSEC[SEXIT] has not been executed since the last execution of GETSEC[SENTER]. See Chapter 6, "Safer Mode Extensions Reference," in *Intel® 64 and IA-32 Architectures Software Developer's Manual, Volume 2B*.

- The interruptibility-state field does not indicate blocking by MOV SS and the VM entry is vectoring with either of the following interruption type: software interrupt or software exception.
- The VM entry is not vectoring and the activity-state field indicates either shutdown or wait-for-SIPI.

If none of the above hold, the pending debug exceptions field specifies the debug exceptions that are pending for the guest. There are **valid pending debug exceptions** if either the BS bit (bit 14) or the enable-breakpoint bit (bit 12) is 1. If there are valid pending debug exceptions, they are handled as follows:

- If the VM entry is not vectoring, the pending debug exceptions are treated as they would had they been encountered normally in guest execution:
  - If the logical processor is not blocking such exceptions (the interruptibility-state field indicates no blocking by MOV SS), a debug exception is delivered after VM entry (see below).
  - If the logical processor is blocking such exceptions (due to blocking by MOV SS), the pending debug exceptions are held pending or lost as would normally be the case.
- If the VM entry is vectoring (with interruption type software interrupt or software exception and with blocking by MOV SS), the following items apply:
  - For injection of a software interrupt or of a software exception with vector 3 (#BP) or vector 4 (#OF) — or a privileged software exception with vector 1 (#DB) — the pending debug exceptions are treated as they would had they been encountered normally in guest execution if the corresponding instruction (INT1, INT3, or INTO) were executed after a MOV SS that encountered a debug trap.
  - For injection of a software exception with a vector other than 3 and 4, the pending debug exceptions may be lost or they may be delivered after injection (see below).

If there are no valid pending debug exceptions (as defined above), no pending debug exceptions are delivered after VM entry.

If a pending debug exception is delivered after VM entry, it has the priority of "traps on the previous instruction" (see Section 6.9 in the *Intel® 64 and IA-32 Architectures Software Developer's Manual, Volume 3A*). Thus, INIT signals and system-management interrupts (SMIs) take priority of such an exception, as do VM exits induced by the TPR threshold (see Section 27.7.7) and pending MTF VM exits (see Section 27.7.8. The exception takes priority over any pending non-maskable interrupt (NMI) or external interrupt and also over VM exits due to the 1-settings of the "interrupt-window exiting" and "NMI-window exiting" VM-execution controls.

A pending debug exception delivered after VM entry causes a VM exit if the bit 1 (#DB) is 1 in the exception bitmap. If it does not cause a VM exit, it updates DR6 normally.

27.7.4 VMX-Preemption Timer

If the "activate VMX-preemption timer" VM-execution control is 1, VM entry starts the VMX-preemption timer with the unsigned value in the VMX-preemption timer-value field.

It is possible for the VMX-preemption timer to expire during VM entry (e.g., if the value in the VMX-preemption timer-value field is zero). If this happens (and if the VM entry was not to the wait-for-SIPI state), a VM exit occurs with its normal priority after any event injection and before execution of any instruction following VM entry. For example, any pending debug exceptions established by VM entry (see Section 27.7.3) take priority over a timer-induced VM exit. (The timer-induced VM exit will occur after delivery of the debug exception, unless that exception or its delivery causes a different VM exit.)

See Section 26.5.1 for details of the operation of the VMX-preemption timer in VMX non-root operation, including the blocking and priority of the VM exits that it causes.

27.7.5 Interrupt-Window Exiting and Virtual-Interrupt Delivery

If "interrupt-window exiting" VM-execution control is 1, an open interrupt window may cause a VM exit immediately after VM entry (see Section 26.2 for details). If the "interrupt-window exiting" VM-execution control is 0 but the "virtual-interrupt delivery" VM-execution control is 1, a virtual interrupt may be delivered immediately after VM entry (see Section 27.3.2.5 and Section 30.2.1).

The following items detail the treatment of these events:

- These events occur after any event injection specified for VM entry.
- Non-maskable interrupts (NMIs) and higher priority events take priority over these events. These events take priority over external interrupts and lower priority events.
- These events wake the logical processor if it just entered the HLT state because of a VM entry (see Section 27.7.2). They do not occur if the logical processor just entered the shutdown state or the wait-for-SIPI state.

27.7.6 NMI-Window Exiting

The "NMI-window exiting" VM-execution control may cause a VM exit to occur immediately after VM entry (see Section 26.2 for details).

The following items detail the treatment of these VM exits:

- These VM exits follow event injection if such injection is specified for VM entry.
- Debug-trap exceptions (see Section 27.7.3) and higher priority events take priority over VM exits caused by this control. VM exits caused by this control take priority over non-maskable interrupts (NMIs) and lower priority events.
- VM exits caused by this control wake the logical processor if it just entered either the HLT state or the shutdown state because of a VM entry (see Section 27.7.2). They do not occur if the logical processor just entered the wait-for-SIPI state.

27.7.7 VM Exits Induced by the TPR Threshold

If the "use TPR shadow" and "virtualize APIC accesses" VM-execution controls are both 1 and the "virtual-interrupt delivery" VM-execution control is 0, a VM exit occurs immediately after VM entry if the value of bits 3:0 of the TPR threshold VM-execution control field is greater than the value of bits 7:4 of VTPR (see Section 30.1.1).[1]

The following items detail the treatment of these VM exits:

- The VM exits are not blocked if RFLAGS.IF = 0 or by the setting of bits in the interruptibility-state field in guest-state area.
- The VM exits follow event injection if such injection is specified for VM entry.
- VM exits caused by this control take priority over system-management interrupts (SMIs), INIT signals, and lower priority events. They thus have priority over the VM exits described in Section 27.7.5, Section 27.7.6, and Section 27.7.8, as well as any interrupts or debug exceptions that may be pending at the time of VM entry.
- These VM exits wake the logical processor if it just entered the HLT state as part of a VM entry (see Section 27.7.2). They do not occur if the logical processor just entered the shutdown state or the wait-for-SIPI state.

  If such a VM exit is suppressed because the processor just entered the shutdown state, it occurs after the delivery of any event that cause the logical processor to leave the shutdown state while remaining in VMX non-root operation (e.g., due to an NMI that occurs while the "NMI-exiting" VM-execution control is 0).
- The basic exit reason is "TPR below threshold."

27.7.8 Pending MTF VM Exits

As noted in Section 27.6.2, VM entry may cause an MTF VM exit to be pending immediately after VM entry. The following items detail the treatment of these VM exits:

- System-management interrupts (SMIs), INIT signals, and higher priority events take priority over these VM exits. These VM exits take priority over debug-trap exceptions and lower priority events.
- These VM exits wake the logical processor if it just entered the HLT state because of a VM entry (see Section 27.7.2). They do not occur if the logical processor just entered the shutdown state or the wait-for-SIPI state.

1. "Virtualize APIC accesses" and "virtual-interrupt delivery" are secondary processor-based VM-execution controls. If bit 31 of the primary processor-based VM-execution controls is 0, VM entry functions as if these controls were 0. See Section 25.6.2.

27.7.9 VM Entries and Advanced Debugging Features

VM entries are not logged with last-branch records, do not produce branch-trace messages, and do not update the branch-trace store.

27.7.10 User-Interrupt Recognition After VM Entry

A VM entry results in recognition of a pending user interrupt if it completes with CR4.UINTR = IA32_EFER.LMA = 1 and with UIRR ≠ 0; otherwise, no pending user interrupt is recognized.

27.8 VM-ENTRY FAILURES DURING OR AFTER LOADING GUEST STATE

VM-entry failures due to the checks identified in Section 27.3.1 and failures during the MSR loading identified in Section 27.4 are treated differently from those that occur earlier in VM entry. In these cases, the following steps take place:

1. Information about the VM-entry failure is recorded in the VM-exit information fields:
   - Exit reason.
     - Bits 15:0 of this field contain the basic exit reason. It is loaded with a number indicating the general cause of the VM-entry failure. The following numbers are used:
       33. VM-entry failure due to invalid guest state. A VM entry failed one of the checks identified in Section 27.3.1.
       34. VM-entry failure due to MSR loading. A VM entry failed in an attempt to load MSRs (see Section 27.4).
       41. VM-entry failure due to machine-check event. A machine-check event occurred during VM entry (see Section 27.9).
     - Bit 31 is set to 1 to indicate a VM-entry failure.
     - The remainder of the field (bits 30:16) is cleared.
   - Exit qualification. This field is set based on the exit reason.
     - VM-entry failure due to invalid guest state. In most cases, the exit qualification is cleared to 0. The following non-zero values are used in the cases indicated:
       1. Not used.
       2. Failure was due to a problem loading the PDPTEs (see Section 27.3.1.6).
       3. Failure was due to an attempt to inject a non-maskable interrupt (NMI) into a guest that is blocking events through the STI blocking bit in the interruptibility-state field.
       4. Failure was due to an invalid VMCS link pointer (see Section 27.3.1.5).

       VM-entry checks on guest-state fields may be performed in any order. Thus, an indication by exit qualification of one cause does not imply that there are not also other errors. Different processors may give different exit qualifications for the same VMCS.
     - VM-entry failure due to MSR loading. The exit qualification is loaded to indicate which entry in the VM-entry MSR-load area caused the problem (1 for the first entry, 2 for the second, etc.).
   - All other VM-exit information fields are unmodified.
2. Processor state is loaded as would be done on a VM exit (see Section 28.5). If this results in [CR4.PAE & CR0.PG & ~IA32_EFER.LMA] = 1, page-directory-pointer-table entries (PDPTEs) may be checked and loaded (see Section 28.5.4).
3. The state of blocking by NMI is what it was before VM entry.
4. MSRs are loaded as specified in the VM-exit MSR-load area (see Section 28.6).

Although this process resembles that of a VM exit, many steps taken during a VM exit do not occur for these VM-entry failures:

- Most VM-exit information fields are not updated (see step 1 above).
- The valid bit in the VM-entry interruption-information field is not cleared.
- The guest-state area is not modified.
- No MSRs are saved into the VM-exit MSR-store area.

27.9 MACHINE-CHECK EVENTS DURING VM ENTRY

If a machine-check event occurs during a VM entry, one of the following occurs:

- The machine-check event is handled as if it occurred before the VM entry:
  - If CR4.MCE = 0, operation of the logical processor depends on whether the logical processor is in SMX operation:[1]
    - If the logical processor is in SMX operation, an Intel® TXT shutdown condition occurs. The error code used is 000CH, indicating "unrecoverable machine-check condition."
    - If the logical processor is outside SMX operation, it goes to the shutdown state.
  - If CR4.MCE = 1, a machine-check exception (#MC) is delivered through the IDT.
- The machine-check event is handled after VM entry completes:
  - If the VM entry ends with CR4.MCE = 0, operation of the logical processor depends on whether the logical processor is in SMX operation:
    - If the logical processor is in SMX operation, an Intel® TXT shutdown condition occurs with error code 000CH (unrecoverable machine-check condition).
    - If the logical processor is outside SMX operation, it goes to the shutdown state.
  - If the VM entry ends with CR4.MCE = 1, a machine-check exception (#MC) is generated:
    - If bit 18 (#MC) of the exception bitmap is 0, the exception is delivered through the guest IDT.
    - If bit 18 of the exception bitmap is 1, the exception causes a VM exit.
- A VM-entry failure occurs as described in Section 27.8. The basic exit reason is 41, for "VM-entry failure due to machine-check event."

The first option is not used if the machine-check event occurs after any guest state has been loaded. The second option is used only if VM entry is able to load all guest state.

1. A logical processor is in SMX operation if GETSEC[SEXIT] has not been executed since the last execution of GETSEC[SENTER]. A logical processor is outside SMX operation if GETSEC[SENTER] has not been executed or if GETSEC[SEXIT] was executed after the last execution of GETSEC[SENTER]. See Chapter 6, "Safer Mode Extensions Reference," in *Intel® 64 and IA-32 Architectures Software Developer's Manual, Volume 2B*.

CHAPTER 28
VM EXITS

VM exits occur in response to certain instructions and events in VMX non-root operation as detailed in Section 26.1 through Section 26.2. VM exits perform the following operations:

1. Information about the cause of the VM exit is recorded in the VM-exit information fields and VM-entry control fields are modified as described in Section 28.2.
2. Processor state is saved in the guest-state area (Section 28.3).
3. MSRs may be saved in the VM-exit MSR-store area (Section 28.4). This step is not performed for SMM VM exits that activate the dual-monitor treatment of SMIs and SMM.
4. The following may be performed in parallel and in any order (Section 28.5):
   — Processor state is loaded based in part on the host-state area and some VM-exit controls. This step is not performed for SMM VM exits that activate the dual-monitor treatment of SMIs and SMM. See Section 32.15.6 for information on how processor state is loaded by such VM exits.
   — Address-range monitoring is cleared.
5. MSRs may be loaded from the VM-exit MSR-load area (Section 28.6). This step is not performed for SMM VM exits that activate the dual-monitor treatment of SMIs and SMM.

VM exits are not logged with last-branch records, do not produce branch-trace messages, and do not update the branch-trace store.

Section 28.1 clarifies the nature of the architectural state before a VM exit begins. The steps described above are detailed in Section 28.2 through Section 28.6.

Section 32.15 describes the dual-monitor treatment of system-management interrupts (SMIs) and system-management mode (SMM). Under this treatment, ordinary transitions to SMM are replaced by VM exits to a separate SMM monitor. Called **SMM VM exits**, these are caused by the arrival of an SMI or the execution of VMCALL in VMX root operation. SMM VM exits differ from other VM exits in ways that are detailed in Section 32.15.2.

28.1 ARCHITECTURAL STATE BEFORE A VM EXIT

This section describes the architectural state that exists before a VM exit, especially for VM exits caused by events that would normally be delivered through the IDT. Note the following:

- An exception causes a VM exit **directly** if the bit corresponding to that exception is set in the exception bitmap. A non-maskable interrupt (NMI) causes a VM exit directly if the "NMI exiting" VM-execution control is 1. An external interrupt causes a VM exit directly if the "external-interrupt exiting" VM-execution control is 1. A start-up IPI (SIPI) that arrives while a logical processor is in the wait-for-SIPI activity state causes a VM exit directly. INIT signals that arrive while the processor is not in the wait-for-SIPI activity state cause VM exits directly.
- An exception, NMI, external interrupt, or software interrupt causes a VM exit **indirectly** if it does not do so directly but delivery of the event causes a nested exception, double fault, task switch, APIC access (see Section 30.4), EPT violation, EPT misconfiguration, page-modification log-full event (see Section 29.3.6), or SPP-related event (see Section 29.3.4) that causes a VM exit.
- An event **results** in a VM exit if it causes a VM exit (directly or indirectly).

The following bullets detail when architectural state is and is not updated in response to VM exits:

- If an event causes a VM exit directly, it does not update architectural state as it would have if it had it not caused the VM exit:
  — A debug exception does not update DR6, DR7, or IA32_DEBUGCTL. (Information about the nature of the debug exception is saved in the exit qualification field.)
  — A page fault does not update CR2. (The linear address causing the page fault is saved in the exit-qualification field.)

  - An NMI causes subsequent NMIs to be blocked, but only after the VM exit completes.
  - An external interrupt does not acknowledge the interrupt controller and the interrupt remains pending, unless the "acknowledge interrupt on exit" VM-exit control is 1. In such a case, the interrupt controller is acknowledged and the interrupt is no longer pending.
  - The flags L0 – L3 in DR7 (bit 0, bit 2, bit 4, and bit 6) are not cleared when a task switch causes a VM exit.
  - If a task switch causes a VM exit, none of the following are modified by the task switch: old task-state segment (TSS); new TSS; old TSS descriptor; new TSS descriptor; RFLAGS.NT[1]; or the TR register.
  - No last-exception record is made if the event that would do so directly causes a VM exit.
  - If a machine-check exception causes a VM exit directly, this does not prevent machine-check MSRs from being updated. These are updated by the machine-check event itself and not the resulting machine-check exception.
  - If the logical processor is in an inactive state (see Section 25.4.2) and not executing instructions, some events may be blocked but others may return the logical processor to the active state. Unblocked events may cause VM exits.[2] If an unblocked event causes a VM exit directly, a return to the active state occurs only after the VM exit completes.[3] The VM exit generates any special bus cycle that is normally generated when the active state is entered from that activity state.

    MTF VM exits (see Section 26.5.2 and Section 27.7.8) are not blocked in the HLT activity state. If an MTF VM exit occurs in the HLT activity state, the logical processor returns to the active state only after the VM exit completes. MTF VM exits are blocked the shutdown state and the wait-for-SIPI state.

- If an event causes a VM exit indirectly, the event does update architectural state:
  - A debug exception updates DR6, DR7, and the IA32_DEBUGCTL MSR. No debug exceptions are considered pending.
  - A page fault updates CR2.
  - An NMI causes subsequent NMIs to be blocked before the VM exit commences.
  - An external interrupt acknowledges the interrupt controller and the interrupt is no longer pending.
  - If the logical processor had been in an inactive state, it enters the active state and, before the VM exit commences, generates any special bus cycle that is normally generated when the active state is entered from that activity state.
  - There is no blocking by STI or by MOV SS when the VM exit commences.
  - Processor state that is normally updated as part of delivery through the IDT (CS, RIP, SS, RSP, RFLAGS) is not modified. However, the incomplete delivery of the event may write to the stack.
  - The treatment of last-exception records is implementation dependent:
    - Some processors make a last-exception record when beginning the delivery of an event through the IDT (before it can encounter a nested exception). Such processors perform this update even if the event encounters a nested exception that causes a VM exit (including the case where nested exceptions lead to a triple fault).
    - Other processors delay making a last-exception record until event delivery has reached some event handler successfully (perhaps after one or more nested exceptions). Such processors do not update the last-exception record if a VM exit or triple fault occurs before an event handler is reached.

---

1. This chapter uses the notation RAX, RIP, RSP, RFLAGS, etc. for processor registers because most processors that support VMX operation also support Intel 64 architecture. For processors that do not support Intel 64 architecture, this notation refers to the 32-bit forms of those registers (EAX, EIP, ESP, EFLAGS, etc.). In a few places, notation such as EAX is used to refer specifically to lower 32 bits of the indicated register.
2. If a VM exit takes the processor from an inactive state resulting from execution of a specific instruction (HLT or MWAIT), the value saved for RIP by that VM exit will reference the following instruction.
3. An exception is made if the logical processor had been inactive due to execution of MWAIT; in this case, it is considered to have become active before the VM exit.

- If the "virtual NMIs" VM-execution control is 1, VM entry injects an NMI, and delivery of the NMI causes a nested exception, double fault, task switch, EPT violation, EPT misconfiguration, page-modification log-full event, or SPP-related event, or APIC access that causes a VM exit, virtual-NMI blocking is in effect before the VM exit commences.
- If a VM exit results from a fault, EPT violation, EPT misconfiguration, page-modification log-full event, or SPP-related event that is encountered during execution of IRET and the "NMI exiting" VM-execution control is 0, any blocking by NMI is cleared before the VM exit commences. However, the previous state of blocking by NMI may be recorded in the exit qualification or in the VM-exit interruption-information field; see Section 28.2.3.
- If a VM exit results from a fault, EPT violation, EPT misconfiguration, page-modification log-full event, or SPP-related event that is encountered during execution of IRET and the "virtual NMIs" VM-execution control is 1, virtual-NMI blocking is cleared before the VM exit commences. However, the previous state of blocking by NMI may be recorded in the exit qualification or in the VM-exit interruption-information field; see Section 28.2.3.
- Suppose that a VM exit is caused directly by an x87 FPU Floating-Point Error (#MF) or by any of the following events if the event was unblocked due to (and given priority over) an x87 FPU Floating-Point Error: an INIT signal, an external interrupt, an NMI, an SMI; or a machine-check exception. In these cases, there is no blocking by STI or by MOV SS when the VM exit commences.
- Normally, a last-branch record may be made when an event is delivered through the IDT. However, if such an event results in a VM exit before delivery is complete, no last-branch record is made.
- If machine-check exception results in a VM exit, processor state is suspect and may result in suspect state being saved to the guest-state area. A VM monitor should consult the RIPV and EIPV bits in the IA32_MCG_STATUS MSR before resuming a guest that caused a VM exit resulting from a machine-check exception.
- If a VM exit results from a fault, APIC access (see Section 30.4), EPT violation, EPT misconfiguration, page-modification log-full event, or SPP-related event that is encountered while executing an instruction, data breakpoints due to that instruction may have been recognized and information about them may be saved in the pending debug exceptions field (unless the VM exit clears that field; see Section 28.3.4).
- The following VM exits are considered to happen after an instruction is executed:
  - VM exits resulting from debug traps (single-step, I/O breakpoints, and data breakpoints).
  - VM exits resulting from debug exceptions (data breakpoints) whose recognition was delayed by blocking by MOV SS.
  - VM exits resulting from some machine-check exceptions.
  - Trap-like VM exits due to execution of MOV to CR8 when the "CR8-load exiting" VM-execution control is 0 and the "use TPR shadow" VM-execution control is 1 (see Section 30.3). (Such VM exits can occur only from 64-bit mode and thus only on processors that support Intel 64 architecture.)
  - Trap-like VM exits due to execution of WRMSR when the "use MSR bitmaps" VM-execution control is 1; the value of ECX is in the range 800H–8FFH; and the bit corresponding to the ECX value in write bitmap for low MSRs is 0; and the "virtualize x2APIC mode" VM-execution control is 1. See Section 30.5.
  - VM exits caused by APIC-write emulation (see Section 30.4.3.2) that result from APIC accesses as part of instruction execution.

  For these VM exits, the instruction's modifications to architectural state complete before the VM exit occurs. Such modifications include those to the logical processor's interruptibility state (see Table 25-3). If there had been blocking by MOV SS, POP SS, or STI before the instruction executed, such blocking is no longer in effect.

A VM exit that occurs in enclave mode sets bit 27 of the exit-reason field and bit 4 of the guest interruptibility-state field. Before such a VM exit is delivered, an Asynchronous Enclave Exit (AEX) occurs (see Chapter 37, "Enclave Exiting Events"). An AEX modifies architectural state (Section 37.3). In particular, the processor establishes the following architectural state as indicated:

- The following bits in RFLAGS are cleared: CF, PF, AF, ZF, SF, OF, and RF.
- FS and GS are restored to the values they had prior to the most recent enclave entry.
- RIP is loaded with the AEP of interrupted enclave thread.
- RSP is loaded from the URSP field in the enclave's state-save area (SSA).

28.2 RECORDING VM-EXIT INFORMATION AND UPDATING VM-ENTRY CONTROL FIELDS

VM exits begin by recording information about the nature of and reason for the VM exit in the VM-exit information fields. Section 28.2.1 to Section 28.2.5 detail the use of these fields.

In addition to updating the VM-exit information fields, the valid bit (bit 31) is cleared in the VM-entry interruption-information field. If bit 5 of the IA32_VMX_MISC MSR (index 485H) is read as 1 (see Appendix A.6), the value of IA32_EFER.LMA is stored into the "IA-32e mode guest" VM-entry control.[1]

28.2.1 Basic VM-Exit Information

Section 25.9.1 defines the basic VM-exit information fields. The following items detail their use.

- **Exit reason.**
  - Bits 15:0 of this field contain the basic exit reason. It is loaded with a number indicating the general cause of the VM exit. Appendix C lists the numbers used and their meaning.
  - Bit 27 of this field is set to 1 if the VM exit occurred while the logical processor was in enclave mode.

    Such VM exits include those caused by interrupts, non-maskable interrupts, system-management interrupts, INIT signals, and exceptions occurring in enclave mode as well as exceptions encountered during the delivery of such events incident to enclave mode.

    A VM exit also sets this bit if it is incident to delivery of an event injected by VM entry and the guest interruptibility-state field indicates an enclave interruption (bit 4 of the field is 1).
  - The remainder of the field (bits 31:28 and bits 26:16) is cleared to 0 (certain SMM VM exits may set some of these bits; see Section 32.15.2.3).[2]
- **Exit qualification.** This field is saved for VM exits due to the following causes: debug exceptions; page-fault exceptions; start-up IPIs (SIPIs); system-management interrupts (SMIs) that arrive immediately after the execution of I/O instructions; task switches; INVEPT; INVLPG; INVPCID; INVVPID; LGDT; LIDT; LLDT; LTR; SGDT; SIDT; SLDT; STR; VMCLEAR; VMPTRLD; VMPTRST; VMREAD; VMWRITE; VMXON; WBINVD; WBNOINVD; XRSTORS; XSAVES; control-register accesses; MOV DR; I/O instructions; MWAIT; accesses to the APIC-access page (see Section 30.4); EPT violations (see Section 29.3.3.2); EOI virtualization (see Section 30.1.4); APIC-write emulation (see Section 30.4.3.3); page-modification log full (see Section 29.3.6); and SPP-related events (see Section 29.3.4). For all other VM exits, this field is cleared. The following items provide details:
  - For a debug exception, the exit qualification contains information about the debug exception. The information has the format given in Table 28-1.

Table 28-1. Exit Qualification for Debug Exceptions

Bit Position(s)	Contents
3:0	B3 – B0. When set, each of these bits indicates that the corresponding breakpoint condition was met. Any of these bits may be set even if its corresponding enabling bit in DR7 is not set.
12:4	Not currently defined.
13	BD. When set, this bit indicates that the cause of the debug exception is "debug register access detected."
14	BS. When set, this bit indicates that the cause of the debug exception is either the execution of a single instruction (if RFLAGS.TF = 1 and IA32_DEBUGCTL.BTF = 0) or a taken branch (if RFLAGS.TF = DEBUGCTL.BTF = 1).

1. Bit 5 of the IA32_VMX_MISC MSR is read as 1 on any logical processor that supports the 1-setting of the "unrestricted guest" VM-execution control.
2. Bit 31 of this field is set on certain VM-entry failures; see Section 27.8.

Table 28-1. Exit Qualification for Debug Exceptions (Contd.)

Bit Position(s)	Contents
15	Not currently defined.
16	RTM. When set, this bit indicates that a debug exception (#DB) or a breakpoint exception (#BP) occurred inside an RTM region while advanced debugging of RTM transactional regions was enabled (see Section 16.3.7, "RTM-Enabled Debugger Support," of the *Intel® 64 and IA-32 Architectures Software Developer's Manual, Volume 1*).[1]
63:17	Not currently defined. Bits 63:32 exist only on processors that support Intel 64 architecture.

NOTES:

1. In general, the format of this field matches that of DR6. However, DR6 **clears** bit 16 to indicate an RTM-related exception, while this field **sets** the bit to indicate that condition.

— For a page-fault exception, the exit qualification contains the linear address that caused the page fault. On processors that support Intel 64 architecture, bits 63:32 are cleared if the logical processor was not in 64-bit mode before the VM exit.

If the page-fault exception occurred during execution of an instruction in enclave mode (and not during delivery of an event incident to enclave mode), bits 11:0 of the exit qualification are cleared.

— For a start-up IPI (SIPI), the exit qualification contains the SIPI vector information in bits 7:0. Bits 63:8 of the exit qualification are cleared to 0.

— For a task switch, the exit qualification contains details about the task switch, encoded as shown in Table 28-2.

— For INVLPG, the exit qualification contains the linear-address operand of the instruction.

- On processors that support Intel 64 architecture, bits 63:32 are cleared if the logical processor was not in 64-bit mode before the VM exit.
- If the INVLPG source operand specifies an unusable segment, the linear address specified in the exit qualification will match the linear address that the INVLPG would have used if no VM exit occurred. This address is not architecturally defined and may be implementation-specific.

Table 28-2. Exit Qualification for Task Switches

Bit Position(s)	Contents
15:0	Selector of task-state segment (TSS) to which the guest attempted to switch
29:16	Not currently defined
31:30	Source of task switch initiation: 0: CALL instruction 1: IRET instruction 2: JMP instruction 3: Task gate in IDT
63:32	Not currently defined. These bits exist only on processors that support Intel 64 architecture.

— For INVEPT, INVPCID, INVVPID, LGDT, LIDT, LLDT, LTR, SGDT, SIDT, SLDT, STR, VMCLEAR, VMPTRLD, VMPTRST, VMREAD, VMWRITE, VMXON, XRSTORS, and XSAVES, the exit qualification receives the value of the instruction's displacement field, which is sign-extended to 64 bits if necessary (32 bits on processors that do not support Intel 64 architecture). If the instruction has no displacement (for example, has a register operand), zero is stored into the exit qualification.

On processors that support Intel 64 architecture, an exception is made for RIP-relative addressing (used only in 64-bit mode). Such addressing causes an instruction to use an address that is the sum of the

displacement field and the value of RIP that references the following instruction. In this case, the exit qualification is loaded with the sum of the displacement field and the appropriate RIP value.

In all cases, bits of this field beyond the instruction's address size are undefined. For example, suppose that the address-size field in the VM-exit instruction-information field (see Section 25.9.4 and Section 28.2.5) reports an *n*-bit address size. Then bits 63:*n* (bits 31:*n* on processors that do not support Intel 64 architecture) of the instruction displacement are undefined.

— For a control-register access, the exit qualification contains information about the access and has the format given in Table 28-3.

— For MOV DR, the exit qualification contains information about the instruction and has the format given in Table 28-4.

— For an I/O instruction, the exit qualification contains information about the instruction and has the format given in Table 28-5.

— For MWAIT, the exit qualification contains a value that indicates whether address-range monitoring hardware was armed. The exit qualification is set either to 0 (if address-range monitoring hardware is not armed) or to 1 (if address-range monitoring hardware is armed).

— WBINVD and WBNOINVD use the same basic exit reason (see Appendix C). For WBINVD, the exit qualification is 0, while for WBNOINVD it is 1.

— For an APIC-access VM exit resulting from a linear access or a guest-physical access to the APIC-access page (see Section 30.4), the exit qualification contains information about the access and has the format given in Table 28-6.[1]

If the access to the APIC-access page occurred during execution of an instruction in enclave mode (and not during delivery of an event incident to enclave mode), bits 11:0 of the exit qualification are cleared.

Such a VM exit that set bits 15:12 of the exit qualification to 0000b (data read during instruction execution) or 0001b (data write during instruction execution) set bit 12—which distinguishes data read from data write—to that which would have been stored in bit 1—W/R—of the page-fault error code had the access caused a page fault instead of an APIC-access VM exit. This implies the following:

- For an APIC-access VM exit caused by the CLFLUSH and CLFLUSHOPT instructions, the access type is "data read during instruction execution."
- For an APIC-access VM exit caused by the ENTER instruction, the access type is "data write during instruction execution."

Table 28-3. Exit Qualification for Control-Register Accesses

Bit Positions	Contents
3:0	Number of control register (0 for CLTS and LMSW). Bit 3 is always 0 on processors that do not support Intel 64 architecture as they do not support CR8.
5:4	Access type: 0 = MOV to CR 1 = MOV from CR 2 = CLTS 3 = LMSW
6	LMSW operand type: 0 = register 1 = memory For CLTS and MOV CR, cleared to 0

1. The exit qualification is undefined if the access was part of the logging of a branch record or a processor-event-based-sampling (PEBS) record to the DS save area. It is recommended that software configure the paging structures so that no address in the DS save area translates to an address on the APIC-access page.

Table 28-3. Exit Qualification for Control-Register Accesses (Contd.)

Bit Positions	Contents
7	Not currently defined
11:8	For MOV CR, the general-purpose register: 0 = RAX 1 = RCX 2 = RDX 3 = RBX 4 = RSP 5 = RBP 6 = RSI 7 = RDI 8–15 represent R8–R15, respectively (used only on processors that support Intel 64 architecture) For CLTS and LMSW, cleared to 0
15:12	Not currently defined
31:16	For LMSW, the LMSW source data For CLTS and MOV CR, cleared to 0
63:32	Not currently defined. These bits exist only on processors that support Intel 64 architecture.

- For an APIC-access VM exit caused by the MASKMOVQ instruction or the MASKMOVDQU instruction, the access type is "data write during instruction execution."
- For an APIC-access VM exit caused by the MONITOR instruction, the access type is "data read during instruction execution."
- For an APIC-access VM exit caused directly by an access to a linear address in the DS save area (BTS or PEBS), the access type is "linear access for monitoring."
- For an APIC-access VM exit caused by a guest-physical access performed for an access to the DS save area (e.g., to access a paging structure to translate a linear address), the access type is "guest-physical access for monitoring or trace."
- For an APIC-access VM exit caused by trace-address pre-translation (TAPT) when the "Intel PT uses guest physical addresses" VM-execution control is 1, the access type is "guest-physical access for monitoring or trace."

Such a VM exit stores 1 for bit 31 for IDT-vectoring information field (see Section 28.2.4) if and only if it sets bits 15:12 of the exit qualification to 0011b (linear access during event delivery) or 1010b (guest-physical access during event delivery).

See Section 30.4.4 for further discussion of these instructions and APIC-access VM exits.

For APIC-access VM exits resulting from physical accesses to the APIC-access page (see Section 30.4.6), the exit qualification is undefined.

— For an EPT violation, the exit qualification contains information about the access causing the EPT violation and has the format given in Table 28-7.

As noted in that table, the format and meaning of the exit qualification depends on the setting of the "mode-based execute control for EPT" VM-execution control and whether the processor supports advanced VM-exit information for EPT violations.[1]

1. Software can determine whether advanced VM-exit information for EPT violations is supported by consulting the VMX capability MSR IA32_VMX_EPT_VPID_CAP (see Appendix A.10).

An EPT violation that occurs during as a result of execution of a read-modify-write operation sets bit 1 (data write). Whether it also sets bit 0 (data read) is implementation-specific and, for a given implementation, may differ for different kinds of read-modify-write operations.

Table 28-4. Exit Qualification for MOV DR

Bit Position(s)	Contents
2:0	Number of debug register
3	Not currently defined
4	Direction of access (0 = MOV to DR; 1 = MOV from DR)
7:5	Not currently defined
11:8	General-purpose register: 0 = RAX 1 = RCX 2 = RDX 3 = RBX 4 = RSP 5 = RBP 6 = RSI 7 = RDI 8 –15 = R8 – R15, respectively
63:12	Not currently defined. Bits 63:32 exist only on processors that support Intel 64 architecture.

Table 28-5. Exit Qualification for I/O Instructions

Bit Position(s)	Contents
2:0	Size of access: 0 = 1-byte 1 = 2-byte 3 = 4-byte Other values not used
3	Direction of the attempted access (0 = OUT, 1 = IN)
4	String instruction (0 = not string; 1 = string)
5	REP prefixed (0 = not REP; 1 = REP)
6	Operand encoding (0 = DX, 1 = immediate)
15:7	Not currently defined
31:16	Port number (as specified in DX or in an immediate operand)
63:32	Not currently defined. These bits exist only on processors that support Intel 64 architecture.

Bit 12 reports "NMI unblocking due to IRET"; see Section 28.2.3.

Bit 16 is set for certain accesses that are asynchronous to instruction execution and not part of event delivery. These include trace-address pre-translation (TAPT) for Intel PT (see Section 26.5.4), accesses

Table 28-6. Exit Qualification for APIC-Access VM Exits from Linear Accesses and Guest-Physical Accesses

Bit Position(s)	Contents
11:0	▪ If the APIC-access VM exit is due to a linear access, the offset of access within the APIC page. ▪ Undefined if the APIC-access VM exit is due a guest-physical access
15:12	Access type: 0 = linear access for a data read during instruction execution 1 = linear access for a data write during instruction execution 2 = linear access for an instruction fetch 3 = linear access (read or write) during event delivery 4 = linear access for monitoring 10 = guest-physical access during event delivery 11 = guest-physical access for monitoring or trace 15 = guest-physical access for an instruction fetch or during instruction execution Other values not used
16	This bit is set for certain accesses that are asynchronous to instruction execution and not part of event delivery. These includes guest-physical accesses related to trace output by Intel PT (see Section 26.5.4), accesses related to PEBS on processors with the "EPT-friendly" enhancement (see Section 20.9.5), and accesses that occur during user-interrupt delivery (see Section 7.4.2).
63:17	Not currently defined. Bits 63:32 exist only on processors that support Intel 64 architecture.

related to PEBS on processors with the "EPT-friendly" enhancement (see Section 20.9.5), and accesses as part of user-interrupt delivery (see Section 7.4.2).

— For VM exits caused as part of EOI virtualization (Section 30.1.4), bits 7:0 of the exit qualification are set to vector of the virtual interrupt that was dismissed by the EOI virtualization. Bits above bit 7 are cleared.

— For APIC-write VM exits (Section 30.4.3.3), bits 11:0 of the exit qualification are set to the page offset of the write access that caused the VM exit.[1] Bits above bit 11 are cleared.

— For a VM exit due to a page-modification log-full event (Section 29.3.6), bit 12 of the exit qualification reports "NMI unblocking due to IRET." Bit 16 is set if the VM exit occurs during TAPT, EPT-friendly PEBS, or user-interrupt delivery. All other bits of the exit qualification are undefined.

— For a VM exit due to an SPP-related event (Section 29.3.4), bit 11 of the exit qualification indicates the type of event: 0 indicates an SPP misconfiguration and 1 indicates an SPP miss. Bit 12 of the exit qualification reports "NMI unblocking due to IRET." Bit 16 is set if the VM exit occurs during TAPT EPT-friendly PEBS, or user-interrupt delivery. All other bits of the exit qualification are undefined.

— If the "PASID translation" VM-execution control, PASID translation is performed for executions of the ENQCMD and ENQCMDS instructions (see Section 26.5.8). PASID translation may fail, resulting in a VM exit. Such a VM exit saves an exit qualification specified in the following items:

  • For ENQCMD, the exit qualification is IA32_PASID[19:0].

  • For ENQCMDS, the exit qualification contains the low 32 bits of the instruction's source operand (which had been read from memory prior to PASID translation).

• **Guest linear address.** For some VM exits, this field receives a linear address that pertains to the VM exit. The field is set for different VM exits as follows:

— VM exits due to attempts to execute LMSW with a memory operand. In these cases, this field receives the linear address of that operand. Bits 63:32 are cleared if the logical processor was not in 64-bit mode before the VM exit.

— VM exits due to attempts to execute INS or OUTS for which the relevant segment is usable (if the relevant segment is not usable, the value is undefined). (ES is always the relevant segment for INS; for OUTS, the

1. Execution of WRMSR with ECX = 83FH (self-IPI MSR) can lead to an APIC-write VM exit; the exit qualification for such an APIC-write VM exit is 3F0H.

relevant segment is DS unless overridden by an instruction prefix.) The linear address is the base address of relevant segment plus (E)DI (for INS) or (E)SI (for OUTS). Bits 63:32 are cleared if the logical processor was not in 64-bit mode before the VM exit.

Table 28-7. Exit Qualification for EPT Violations

Bit Position(s)	Contents
0	Set if the access causing the EPT violation was a data read.[1]
1	Set if the access causing the EPT violation was a data write.[1]
2	Set if the access causing the EPT violation was an instruction fetch.
3	The logical-AND of bit 0 in the EPT paging-structure entries used to translate the guest-physical address of the access causing the EPT violation (indicates whether the guest-physical address was readable).[2]
4	The logical-AND of bit 1 in the EPT paging-structure entries used to translate the guest-physical address of the access causing the EPT violation (indicates whether the guest-physical address was writeable).
5	The logical-AND of bit 2 in the EPT paging-structure entries used to translate the guest-physical address of the access causing the EPT violation. If the "mode-based execute control for EPT" VM-execution control is 0, this indicates whether the guest-physical address was executable. If that control is 1, this indicates whether the guest-physical address was executable for supervisor-mode linear addresses.
6	If the "mode-based execute control" VM-execution control is 0, the value of this bit is undefined. If that control is 1, this bit is the logical-AND of bit 10 in the EPT paging-structure entries used to translate the guest-physical address of the access causing the EPT violation. In this case, it indicates whether the guest-physical address was executable for user-mode linear addresses.
7	Set if the guest linear-address field is valid. The guest linear-address field is valid for all EPT violations except those resulting from an attempt to load the guest PDPTEs as part of the execution of the MOV CR instruction and those due to trace-address pre-translation (TAPT; Section 26.5.4).
8	If bit 7 is 1: ▪ Set if the access causing the EPT violation is to a guest-physical address that is the translation of a linear address. ▪ Clear if the access causing the EPT violation is to a paging-structure entry as part of a page walk or the update of an accessed or dirty bit. Reserved if bit 7 is 0 (cleared to 0).
9	If bit 7 is 1, bit 8 is 1, and the processor supports advanced VM-exit information for EPT violations,[3] this bit is 0 if the linear address is a supervisor-mode linear address and 1 if it is a user-mode linear address. (If CR0.PG = 0, the translation of every linear address is a user-mode linear address and thus this bit will be 1.) Otherwise, this bit is undefined.
10	If bit 7 is 1, bit 8 is 1, and the processor supports advanced VM-exit information for EPT violations,[3] this bit is 0 if paging translates the linear address to a read-only page and 1 if it translates to a read/write page. (If CR0.PG = 0, every linear address is read/write and thus this bit will be 1.) Otherwise, this bit is undefined.
11	If bit 7 is 1, bit 8 is 1, and the processor supports advanced VM-exit information for EPT violations,[3] this bit is 0 if paging translates the linear address to an executable page and 1 if it translates to an execute-disable page. (If CR0.PG = 0, CR4.PAE = 0, or IA32_EFER.NXE = 0, every linear address is executable and thus this bit will be 0.) Otherwise, this bit is undefined.
12	NMI unblocking due to IRET (see Section 28.2.3).
13	Set if the access causing the EPT violation was a shadow-stack access.

Table 28-7. Exit Qualification for EPT Violations (Contd.)

Bit Position(s)	Contents
14	If supervisor shadow-stack control is enabled (by setting bit 7 of EPTP), this bit is the same as bit 60 in the EPT paging-structure entry that maps the page of the guest-physical address of the access causing the EPT violation. Otherwise (or if translation of the guest-physical address terminates before reaching an EPT paging-structure entry that maps a page), this bit is undefined.
15	This bit is set if the EPT violation was caused as a result of guest-paging verification. See Section 29.3.3.2.
16	This bit is set if the access was asynchronous to instruction execution not the result of event delivery. The bit is set if the access is related to trace output by Intel PT (see Section 26.5.4), accesses related to PEBS on processors with the "EPT-friendly" enhancement (see Section 20.9.5), or to user-interrupt delivery (see Section 7.4.2). Otherwise, this bit is cleared.
63:17	Not currently defined. Bits 63:32 exist only on processors that support Intel 64 architecture.

NOTES:

1. If accessed and dirty flags for EPT are enabled, processor accesses to guest paging-structure entries are treated as writes with regard to EPT violations (see Section 29.3.3.2). If such an access causes an EPT violation, the processor sets both bit 0 and bit 1 of the exit qualification.
2. Bits 5:3 are cleared to 0 if any of EPT paging-structure entries used to translate the guest-physical address of the access causing the EPT violation is not present (see Section 29.3.2).
3. Software can determine whether advanced VM-exit information for EPT violations is supported by consulting the VMX capability MSR IA32_VMX_EPT_VPID_CAP (see Appendix A.10).

  — VM exits due to EPT violations that set bit 7 of the exit qualification (see Table 28-7; these are all EPT violations except those resulting from an attempt to load the PDPTEs as of execution of the MOV CR instruction and those due to TAPT). The linear address may translate to the guest-physical address whose access caused the EPT violation. Alternatively, translation of the linear address may reference a paging-structure entry whose access caused the EPT violation. Bits 63:32 are cleared if the logical processor was not in 64-bit mode before the VM exit.

    If the EPT violation occurred during execution of an instruction in enclave mode (and not during delivery of an event incident to enclave mode), bits 11:0 of this field are cleared.

  — VM exits due to SPP-related events.

  — For all other VM exits, the field is undefined.

- **Guest-physical address.** For a VM exit due to an EPT violation, an EPT misconfiguration, or an SPP-related event, this field receives the guest-physical address that caused the EPT violation or EPT misconfiguration. For all other VM exits, the field is undefined.

  If the EPT violation or EPT misconfiguration occurred during execution of an instruction in enclave mode (and not during delivery of an event incident to enclave mode), bits 11:0 of this field are cleared.

28.2.2 Information for VM Exits Due to Vectored Events

Section 25.9.2 defines fields containing information for VM exits due to the following events: exceptions (including those generated by the instructions INT1, INT3, INTO, BOUND, UD0, UD1, and UD2); external interrupts that occur while the "acknowledge interrupt on exit" VM-exit control is 1; and non-maskable interrupts (NMIs).[1] Such VM exits include those that occur on an attempt at a task switch that causes an exception before generating the VM exit due to the task switch that causes the VM exit.

The following items detail the use of these fields:

- **VM-exit interruption information** (format given in Table 25-18). The following items detail how this field is established for VM exits due to these events:

1. INT1 and INT3 refer to the instructions with opcodes F1 and CC, respectively, and not to INT *n* with value 1 or 3 for n.

— For an exception, bits 7:0 receive the exception vector (at most 31). For an NMI, bits 7:0 are set to 2. For an external interrupt, bits 7:0 receive the vector.

— Bits 10:8 are set to 0 (external interrupt), 2 (non-maskable interrupt), 3 (hardware exception), 5 (privileged software exception), or 6 (software exception). Hardware exceptions comprise all exceptions except the following:

  • Debug exceptions (#DB) generated by the INT1 instruction; these are privileged software exceptions. (Other debug exceptions are considered hardware exceptions, as are those caused by executions of INT1 in enclave mode.)

  • Breakpoint exceptions (#BP; generated by INT3) and overflow exceptions (#OF; generated by INTO); these are software exceptions. (A #BP that occurs in enclave mode is considered a hardware exception.)

  BOUND-range exceeded exceptions (#BR; generated by BOUND) and invalid opcode exceptions (#UD) generated by UD0, UD1, and UD2 are hardware exceptions.

— Bit 11 is set to 1 if the VM exit is caused by a hardware exception that would have delivered an error code on the stack. This bit is always 0 if the VM exit occurred while the logical processor was in real-address mode (CR0.PE=0).[1] If bit 11 is set to 1, the error code is placed in the VM-exit interruption error code (see below).

— Bit 12 reports "NMI unblocking due to IRET"; see Section 28.2.3. The value of this bit is undefined if the VM exit is due to a double fault (the interruption type is hardware exception and the vector is 8).

— Bits 30:13 are always set to 0.

— Bit 31 is always set to 1.

For other VM exits (including those due to external interrupts when the "acknowledge interrupt on exit" VM-exit control is 0), the field is marked invalid (by clearing bit 31) and the remainder of the field is undefined.

- VM-exit interruption error code.

  — For VM exits that set both bit 31 (valid) and bit 11 (error code valid) in the VM-exit interruption-information field, this field receives the error code that would have been pushed on the stack had the event causing the VM exit been delivered normally through the IDT. The EXT bit is set in this field exactly when it would be set normally. For exceptions that occur during the delivery of double fault (if the IDT-vectoring information field indicates a double fault), the EXT bit is set to 1, assuming that (1) that the exception would produce an error code normally (if not incident to double-fault delivery) and (2) that the error code uses the EXT bit (not for page faults, which use a different format).

  — For other VM exits, the value of this field is undefined.

28.2.3 Information About NMI Unblocking Due to IRET

A VM exit may occur during execution of the IRET instruction for reasons including the following: faults, EPT violations, page-modification log-full events, or SPP-related events.

An execution of IRET that commences while non-maskable interrupts (NMIs) are blocked will unblock NMIs even if a fault or VM exit occurs; the state saved by such a VM exit will indicate that NMIs were not blocked.

VM exits for the reasons enumerated above provide more information to software by saving a bit called "NMI unblocking due to IRET." This bit is defined if (1) either the "NMI exiting" VM-execution control is 0 or the "virtual NMIs" VM-execution control is 1; (2) the VM exit does not set the valid bit in the IDT-vectoring information field (see Section 28.2.4); and (3) the VM exit is not due to a double fault. In these cases, the bit is defined as follows:

- The bit is 1 if the VM exit resulted from a memory access as part of execution of the IRET instruction and one of the following holds:

  — The "virtual NMIs" VM-execution control is 0 and blocking by NMI (see Table 25-3) was in effect before execution of IRET.

1. If the capability MSR IA32_VMX_CR0_FIXED0 reports that CR0.PE must be 1 in VMX operation, a logical processor cannot be in real-address mode unless the "unrestricted guest" VM-execution control and bit 31 of the primary processor-based VM-execution controls are both 1.

— The "virtual NMIs" VM-execution control is 1 and virtual-NMI blocking was in effect before execution of IRET.

- The bit is 0 for all other relevant VM exits.

For VM exits due to faults, NMI unblocking due to IRET is saved in bit 12 of the VM-exit interruption-information field (Section 28.2.2). For VM exits due to EPT violations, page-modification log-full events, and SPP-related events, NMI unblocking due to IRET is saved in bit 12 of the exit qualification (Section 28.2.1).

(Executions of IRET may also incur VM exits due to APIC accesses and EPT misconfigurations. These VM exits do not report information about NMI unblocking due to IRET.)

28.2.4 Information for VM Exits During Event Delivery

Section 25.9.3 defined fields containing information for VM exits that occur while delivering an event through the IDT and as a result of any of the following cases:[1]

- A fault occurs during event delivery and causes a VM exit (because the bit associated with the fault is set to 1 in the exception bitmap).
- A task switch is invoked through a task gate in the IDT. The VM exit occurs due to the task switch only after the initial checks of the task switch pass (see Section 26.4.2).
- Event delivery causes an APIC-access VM exit (see Section 30.4).
- An EPT violation, EPT misconfiguration, page-modification log-full event, or SPP-related event that occurs during event delivery.
- Any of the above VM exits that occur during user-interrupt notification processing (see Section 7.5.2). Such VM exits will be treated as if they occurred during delivery of an external interrupt with the vector UINV.

These fields are used for VM exits that occur during delivery of events injected as part of VM entry (see Section 27.6.1.2).

A VM exit is not considered to occur during event delivery in any of the following circumstances:

- The original event causes the VM exit directly (for example, because the original event is a non-maskable interrupt (NMI) and the "NMI exiting" VM-execution control is 1).
- The original event results in a double-fault exception that causes the VM exit directly.
- The VM exit occurred as a result of fetching the first instruction of the handler invoked by the event delivery.
- The VM exit is caused by a triple fault.

The following items detail the use of these fields:

- IDT-vectoring information (format given in Table 25-19). The following items detail how this field is established for VM exits that occur during event delivery:
  - If the VM exit occurred during delivery of an exception, bits 7:0 receive the exception vector (at most 31). If the VM exit occurred during delivery of an NMI, bits 7:0 are set to 2. If the VM exit occurred during delivery of an external interrupt, bits 7:0 receive the vector.
  - Bits 10:8 are set to indicate the type of event that was being delivered when the VM exit occurred: 0 (external interrupt), 2 (non-maskable interrupt), 3 (hardware exception), 4 (software interrupt), 5 (privileged software interrupt), or 6 (software exception).

    Hardware exceptions comprise all exceptions except the following:[2]

    - Debug exceptions (#DB) generated by the INT1 instruction; these are privileged software exceptions. (Other debug exceptions are considered hardware exceptions, as are those caused by executions of INT1 in enclave mode.)

1. This includes the case in which a VM exit occurs while delivering a software interrupt (INT *n*) through the 16-bit IVT (interrupt vector table) that is used in virtual-8086 mode with virtual-machine extensions (if RFLAGS.VM = CR4.VME = 1).
2. In the following items, INT1 and INT3 refer to the instructions with opcodes F1 and CC, respectively, and not to INT *n* with value 1 or 3 for n.

  - Breakpoint exceptions (#BP; generated by INT3) and overflow exceptions (#OF; generated by INTO); these are software exceptions. (A #BP that occurs in enclave mode is considered a hardware exception.)

  BOUND-range exceeded exceptions (#BR; generated by BOUND) and invalid opcode exceptions (#UD) generated by UD0, UD1, and UD2 are hardware exceptions.

- Bit 11 is set to 1 if the VM exit occurred during delivery of a hardware exception that would have delivered an error code on the stack. This bit is always 0 if the VM exit occurred while the logical processor was in real-address mode (CR0.PE=0).[1] If bit 11 is set to 1, the error code is placed in the IDT-vectoring error code (see below).
- Bit 12 is undefined.
- Bits 30:13 are always set to 0.
- Bit 31 is always set to 1.

For other VM exits, the field is marked invalid (by clearing bit 31) and the remainder of the field is undefined.

- IDT-vectoring error code.
  - For VM exits that set both bit 31 (valid) and bit 11 (error code valid) in the IDT-vectoring information field, this field receives the error code that would have been pushed on the stack by the event that was being delivered through the IDT at the time of the VM exit. The EXT bit is set in this field when it would be set normally.
  - For other VM exits, the value of this field is undefined.

28.2.5 Information for VM Exits Due to Instruction Execution

Section 25.9.4 defined fields containing information for VM exits that occur due to instruction execution. (The VM-exit instruction length is also used for VM exits that occur during the delivery of a software interrupt or software exception.) The following items detail their use.

- **VM-exit instruction length.** This field is used in the following cases:
  - For fault-like VM exits due to attempts to execute one of the following instructions that cause VM exits unconditionally (see Section 26.1.2) or based on the settings of VM-execution controls (see Section 26.1.3): CLTS, CPUID, ENCLS, GETSEC, HLT, IN, INS, INVD, INVEPT, INVLPG, INVPCID, INVVPID, LGDT, LIDT, LLDT, LMSW, LOADIWKEY, LTR, MONITOR, MOV CR, MOV DR, MWAIT, OUT, OUTS, PAUSE, PCONFIG, RDMSR, RDPMC, RDRAND, RDSEED, RDTSC, RDTSCP, RSM, SGDT, SIDT, SLDT, STR, TPAUSE, UMWAIT, VMCALL, VMCLEAR, VMLAUNCH, VMPTRLD, VMPTRST, VMREAD, VMRESUME, VMWRITE, VMXOFF, VMXON, WBINVD, WBNOINVD, WRMSR, XRSTORS, XSETBV, and XSAVES.[2]
  - For VM exits due to software exceptions (those generated by executions of INT3 or INTO) or privileged software exceptions (those generated by executions of INT1).
  - For VM exits due to faults encountered during delivery of a software interrupt, privileged software exception, or software exception.
  - For VM exits due to attempts to effect a task switch via instruction execution. These are VM exits that produce an exit reason indicating task switch and either of the following:
    - An exit qualification indicating execution of CALL, IRET, or JMP instruction.
    - An exit qualification indicating a task gate in the IDT and an IDT-vectoring information field indicating that the task gate was encountered during delivery of a software interrupt, privileged software exception, or software exception.

1. If the capability MSR IA32_VMX_CR0_FIXED0 reports that CR0.PE must be 1 in VMX operation, a logical processor cannot be in real-address mode unless the "unrestricted guest" VM-execution control and bit 31 of the primary processor-based VM-execution controls are both 1.
2. This item applies only to fault-like VM exits. It does not apply to trap-like VM exits following executions of the MOV to CR8 instruction when the "use TPR shadow" VM-execution control is 1 or to those following executions of the WRMSR instruction when the "virtualize x2APIC mode" VM-execution control is 1.

— For APIC-access VM exits and for VM exits caused by EPT violations, page-modification log-full events, and SPP-related events encountered during delivery of a software interrupt, privileged software exception, or software exception.[1]

— For VM exits due executions of VMFUNC that fail because one of the following is true:

- EAX indicates a VM function that is not enabled (the bit at position EAX is 0 in the VM-function controls; see Section 26.5.6.2).
- EAX = 0 and either ECX ≥ 512 or the value of ECX selects an invalid tentative EPTP value (see Section 26.5.6.3).

In all the above cases, this field receives the length in bytes (1–15) of the instruction (including any instruction prefixes) whose execution led to the VM exit (see the next paragraph for one exception).

The cases of VM exits encountered during delivery of a software interrupt, privileged software exception, or software exception include those encountered during delivery of events injected as part of VM entry (see Section 27.6.1.2). If the original event was injected as part of VM entry, this field receives the value of the VM-entry instruction length.

All VM exits other than those listed in the above items leave this field undefined.

If the VM exit occurred in enclave mode, this field is cleared (none of the previous items apply).

Table 28-8. Format of the VM-Exit Instruction-Information Field as Used for INS and OUTS

Bit Position(s)	Content
6:0	Undefined.
9:7	Address size: 0: 16-bit 1: 32-bit 2: 64-bit (used only on processors that support Intel 64 architecture) Other values not used.
14:10	Undefined.
17:15	Segment register: 0: ES 1: CS 2: SS 3: DS 4: FS 5: GS Other values not used. Undefined for VM exits due to execution of INS.
31:18	Undefined.

- **VM-exit instruction information**. For VM exits due to attempts to execute INS, INVEPT, INVPCID, INVVPID, LIDT, LGDT, LLDT, LOADIWKEY, LTR, OUTS, RDRAND, RDSEED, SIDT, SGDT, SLDT, STR, VMCLEAR, VMPTRLD, VMPTRST, VMREAD, VMWRITE, VMXON, XRSTORS, or XSAVES, this field receives information about the instruction that caused the VM exit. The format of the field depends on the identity of the instruction causing the VM exit:

  — For VM exits due to attempts to execute INS or OUTS, the field has the format is given in Table 28-8.[2]

  — For VM exits due to attempts to execute INVEPT, INVPCID, or INVVPID, the field has the format is given in Table 28-9.

1. The VM-exit instruction-length field is not defined following APIC-access VM exits resulting from physical accesses (see Section 30.4.6) even if encountered during delivery of a software interrupt, privileged software exception, or software exception.
2. The format of the field was undefined for these VM exits on the first processors to support the virtual-machine extensions. Software can determine whether the format specified in Table 28-8 is used by consulting the VMX capability MSR IA32_VMX_BASIC (see Appendix A.1).

— For VM exits due to attempts to execute LIDT, LGDT, SIDT, or SGDT, the field has the format is given in Table 28-10.

— For VM exits due to attempts to execute LLDT, LTR, SLDT, or STR, the field has the format is given in Table 28-11.

— For VM exits due to attempts to execute RDRAND, RDSEED, TPAUSE, or UMWAIT, the field has the format is given in Table 28-12.

— For VM exits due to attempts to execute VMCLEAR, VMPTRLD, VMPTRST, VMXON, XRSTORS, or XSAVES, the field has the format is given in Table 28-13.

— For VM exits due to attempts to execute VMREAD or VMWRITE, the field has the format is given in Table 28-14.

— For VM exits due to attempts to execute LOADIWKEY, the field has the format is given in Table 28-15.

For all other VM exits, the field is undefined, unless the VM exit occurred in enclave mode, in which case the field is cleared.

- **I/O RCX, I/O RSI, I/O RDI, I/O RIP**. These fields are undefined except for SMM VM exits due to system-management interrupts (SMIs) that arrive immediately after retirement of I/O instructions. See Section 32.15.2.3. Note that, if the VM exit occurred in enclave mode, these fields are all cleared.

Table 28-9. Format of the VM-Exit Instruction-Information Field as Used for INVEPT, INVPCID, and INVVPID

Bit Position(s)	Content
1:0	Scaling: 0: no scaling 1: scale by 2 2: scale by 4 3: scale by 8 (used only on processors that support Intel 64 architecture) Undefined for instructions with no index register (bit 22 is set).
6:2	Undefined.
9:7	Address size: 0: 16-bit 1: 32-bit 2: 64-bit (used only on processors that support Intel 64 architecture) Other values not used.
10	Cleared to 0.
14:11	Undefined.
17:15	Segment register: 0: ES 1: CS 2: SS 3: DS 4: FS 5: GS Other values not used.

Table 28-9. Format of the VM-Exit Instruction-Information Field as Used for INVEPT, INVPCID, and INVVPID (Contd.)

Bit Position(s)	Content
21:18	IndexReg: 0 = RAX 1 = RCX 2 = RDX 3 = RBX 4 = RSP 5 = RBP 6 = RSI 7 = RDI 8–15 represent R8–R15, respectively (used only on processors that support Intel 64 architecture) Undefined for instructions with no index register (bit 22 is set).
22	IndexReg invalid (0 = valid; 1 = invalid)
26:23	BaseReg (encoded as IndexReg above) Undefined for memory instructions with no base register (bit 27 is set).
27	BaseReg invalid (0 = valid; 1 = invalid)
31:28	Reg2 (same encoding as IndexReg above)

Table 28-10. Format of the VM-Exit Instruction-Information Field as Used for LIDT, LGDT, SIDT, or SGDT

Bit Position(s)	Content
1:0	Scaling: 0: no scaling 1: scale by 2 2: scale by 4 3: scale by 8 (used only on processors that support Intel 64 architecture) Undefined for instructions with no index register (bit 22 is set).
6:2	Undefined.
9:7	Address size: 0: 16-bit 1: 32-bit 2: 64-bit (used only on processors that support Intel 64 architecture) Other values not used.
10	Cleared to 0.
11	Operand size: 0: 16-bit 1: 32-bit Undefined for VM exits from 64-bit mode.
14:12	Undefined.
17:15	Segment register: 0: ES 1: CS 2: SS 3: DS 4: FS 5: GS Other values not used.

Table 28-10. Format of the VM-Exit Instruction-Information Field as Used for LIDT, LGDT, SIDT, or SGDT (Contd.)

Bit Position(s)	Content
21:18	IndexReg: 0 = RAX 1 = RCX 2 = RDX 3 = RBX 4 = RSP 5 = RBP 6 = RSI 7 = RDI 8–15 represent R8–R15, respectively (used only on processors that support Intel 64 architecture) Undefined for instructions with no index register (bit 22 is set).
22	IndexReg invalid (0 = valid; 1 = invalid)
26:23	BaseReg (encoded as IndexReg above) Undefined for instructions with no base register (bit 27 is set).
27	BaseReg invalid (0 = valid; 1 = invalid)
29:28	Instruction identity: 0: SGDT 1: SIDT 2: LGDT 3: LIDT
31:30	Undefined.

Table 28-11. Format of the VM-Exit Instruction-Information Field as Used for LLDT, LTR, SLDT, and STR

Bit Position(s)	Content
1:0	Scaling: 0: no scaling 1: scale by 2 2: scale by 4 3: scale by 8 (used only on processors that support Intel 64 architecture) Undefined for register instructions (bit 10 is set) and for memory instructions with no index register (bit 10 is clear and bit 22 is set).
2	Undefined.
6:3	Reg1: 0 = RAX 1 = RCX 2 = RDX 3 = RBX 4 = RSP 5 = RBP 6 = RSI 7 = RDI 8–15 represent R8–R15, respectively (used only on processors that support Intel 64 architecture) Undefined for memory instructions (bit 10 is clear).
9:7	Address size: 0: 16-bit 1: 32-bit 2: 64-bit (used only on processors that support Intel 64 architecture) Other values not used. Undefined for register instructions (bit 10 is set).

Table 28-11. Format of the VM-Exit Instruction-Information Field as Used for LLDT, LTR, SLDT, and STR (Contd.)

Bit Position(s)	Content
10	Mem/Reg (0 = memory; 1 = register).
14:11	Undefined.
17:15	Segment register: 0: ES 1: CS 2: SS 3: DS 4: FS 5: GS Other values not used. Undefined for register instructions (bit 10 is set).
21:18	IndexReg (encoded as Reg1 above) Undefined for register instructions (bit 10 is set) and for memory instructions with no index register (bit 10 is clear and bit 22 is set).
22	IndexReg invalid (0 = valid; 1 = invalid) Undefined for register instructions (bit 10 is set).
26:23	BaseReg (encoded as Reg1 above) Undefined for register instructions (bit 10 is set) and for memory instructions with no base register (bit 10 is clear and bit 27 is set).
27	BaseReg invalid (0 = valid; 1 = invalid) Undefined for register instructions (bit 10 is set).
29:28	Instruction identity: 0: SLDT 1: STR 2: LLDT 3: LTR
31:30	Undefined.

Table 28-12. Format of the VM-Exit Instruction-Information Field as Used for RDRAND, RDSEED, TPAUSE, and UMWAIT

Bit Position(s)	Content
2:0	Undefined.
6:3	Operand register (destination for RDRAND and RDSEED; source for TPAUSE and UMWAIT): 0 = RAX 1 = RCX 2 = RDX 3 = RBX 4 = RSP 5 = RBP 6 = RSI 7 = RDI 8–15 represent R8–R15, respectively (used only on processors that support Intel 64 architecture)
10:7	Undefined.

Table 28-12. Format of the VM-Exit Instruction-Information Field as Used for RDRAND, RDSEED, TPAUSE, and UMWAIT (Contd.)

Bit Position(s)	Content
12:11	Operand size: 0: 16-bit 1: 32-bit 2: 64-bit The value 3 is not used.
31:13	Undefined.

Table 28-13. Format of the VM-Exit Instruction-Information Field as Used for VMCLEAR, VMPTRLD, VMPTRST, VMXON, XRSTORS, and XSAVES

Bit Position(s)	Content
1:0	Scaling: 0: no scaling 1: scale by 2 2: scale by 4 3: scale by 8 (used only on processors that support Intel 64 architecture) Undefined for instructions with no index register (bit 22 is set).
6:2	Undefined.
9:7	Address size: 0: 16-bit 1: 32-bit 2: 64-bit (used only on processors that support Intel 64 architecture) Other values not used.
10	Cleared to 0.
14:11	Undefined.
17:15	Segment register: 0: ES 1: CS 2: SS 3: DS 4: FS 5: GS Other values not used.
21:18	IndexReg: 0 = RAX 1 = RCX 2 = RDX 3 = RBX 4 = RSP 5 = RBP 6 = RSI 7 = RDI 8–15 represent R8–R15, respectively (used only on processors that support Intel 64 architecture) Undefined for instructions with no index register (bit 22 is set).
22	IndexReg invalid (0 = valid; 1 = invalid)
26:23	BaseReg (encoded as IndexReg above) Undefined for instructions with no base register (bit 27 is set).

Table 28-13. Format of the VM-Exit Instruction-Information Field as Used for VMCLEAR, VMPTRLD, VMPTRST, VMXON, XRSTORS, and XSAVES (Contd.)

Bit Position(s)	Content
27	BaseReg invalid (0 = valid; 1 = invalid)
31:28	Undefined.

Table 28-14. Format of the VM-Exit Instruction-Information Field as Used for VMREAD and VMWRITE

Bit Position(s)	Content
1:0	Scaling: 0: no scaling 1: scale by 2 2: scale by 4 3: scale by 8 (used only on processors that support Intel 64 architecture) Undefined for register instructions (bit 10 is set) and for memory instructions with no index register (bit 10 is clear and bit 22 is set).
2	Undefined.
6:3	Reg1: 0 = RAX 1 = RCX 2 = RDX 3 = RBX 4 = RSP 5 = RBP 6 = RSI 7 = RDI 8–15 represent R8–R15, respectively (used only on processors that support Intel 64 architecture) Undefined for memory instructions (bit 10 is clear).
9:7	Address size: 0: 16-bit 1: 32-bit 2: 64-bit (used only on processors that support Intel 64 architecture) Other values not used. Undefined for register instructions (bit 10 is set).
10	Mem/Reg (0 = memory; 1 = register).
14:11	Undefined.
17:15	Segment register: 0: ES 1: CS 2: SS 3: DS 4: FS 5: GS Other values not used. Undefined for register instructions (bit 10 is set).
21:18	IndexReg (encoded as Reg1 above) Undefined for register instructions (bit 10 is set) and for memory instructions with no index register (bit 10 is clear and bit 22 is set).
22	IndexReg invalid (0 = valid; 1 = invalid) Undefined for register instructions (bit 10 is set).

Table 28-14. Format of the VM-Exit Instruction-Information Field as Used for VMREAD and VMWRITE (Contd.)

Bit Position(s)	Content
26:23	BaseReg (encoded as Reg1 above) Undefined for register instructions (bit 10 is set) and for memory instructions with no base register (bit 10 is clear and bit 27 is set).
27	BaseReg invalid (0 = valid; 1 = invalid) Undefined for register instructions (bit 10 is set).
31:28	Reg2 (same encoding as Reg1 above)

Table 28-15. Format of the VM-Exit Instruction-Information Field as Used for LOADIWKEY

Bit Position(s)	Content
2:0	Undefined.
6:3	Reg1: identifies the first XMM register operand (XMM0–XMM15; values 8–15 are used only on processors that support Intel 64 architecture).
30:7	Undefined.
31:28	Reg2: identifies the second XMM register operand (see above).

28.3 SAVING GUEST STATE

VM exits save certain components of processor state into corresponding fields in the guest-state area of the VMCS (see Section 25.4). On processors that support Intel 64 architecture, the full value of each natural-width field (see Section 25.11.2) is saved regardless of the mode of the logical processor before and after the VM exit.

In general, the state saved is that which was in the logical processor at the time the VM exit commences. See Section 28.1 for a discussion of which architectural updates occur at that time.

Section 28.3.1 through Section 28.3.4 provide details for how various components of processor state are saved. These sections reference VMCS fields that correspond to processor state. Unless otherwise stated, these references are to fields in the guest-state area.

28.3.1 Saving Control Registers, Debug Registers, and MSRs

Contents of certain control registers, debug registers, and MSRs are saved as follows:

- The contents of CR0, CR3, CR4, and the IA32_SYSENTER_CS, IA32_SYSENTER_ESP, and IA32_SYSENTER_EIP MSRs are saved into the corresponding fields. Bits 63:32 of the IA32_SYSENTER_CS MSR are not saved. On processors that do not support Intel 64 architecture, bits 63:32 of the IA32_SYSENTER_ESP and IA32_SYSENTER_EIP MSRs are not saved.
- If the "save debug controls" VM-exit control is 1, the contents of DR7 and the IA32_DEBUGCTL MSR are saved into the corresponding fields. The first processors to support the virtual-machine extensions supported only the 1-setting of this control and thus always saved data into these fields.
- If the "save IA32_PAT" VM-exit control is 1, the contents of the IA32_PAT MSR are saved into the corresponding field.
- If the "save IA32_EFER" VM-exit control is 1, the contents of the IA32_EFER MSR are saved into the corresponding field.
- If the processor supports either the 1-setting of the "load IA32_BNDCFGS" VM-entry control or that of the "clear IA32_BNDCFGS" VM-exit control, the contents of the IA32_BNDCFGS MSR are saved into the corresponding field.

- If the processor supports either the 1-setting of the "load IA32_RTIT_CTL" VM-entry control or that of the "clear IA32_RTIT_CTL" VM-exit control, the contents of the IA32_RTIT_CTL MSR are saved into the corresponding field.
- If the processor supports the 1-setting of the "load CET" VM-entry control, the contents of the IA32_S_CET and IA32_INTERRUPT_SSP_TABLE_ADDR MSRs are saved into the corresponding fields. On processors that do not support Intel 64 architecture, bits 63:32 of these MSRs are not saved.
- If the processor supports either the 1-setting of the "load guest IA32_LBR_CTL" VM-entry control or that of the "clear IA32_LBR_CTL" VM-exit control, the contents of the IA32_LBR_CTL MSR are saved into the corresponding field.
- If the processor supports the 1-setting of the "load PKRS" VM-entry control, the contents of the IA32_PKRS MSR are saved into the corresponding field.
- If a processor supports user interrupts, every VM exit saves UINV into the guest UINV field in the VMCS (bits 15:8 of the field are cleared).
- If the "save IA32_PERF_GLOBAL_CTL" VM-exit control is 1, the contents of the IA32_PERF_GLOBAL_CTL MSR are saved into the corresponding field.
- The value of the SMBASE field is undefined after all VM exits except SMM VM exits. See Section 32.15.2.

28.3.2 Saving Segment Registers and Descriptor-Table Registers

For each segment register (CS, SS, DS, ES, FS, GS, LDTR, or TR), the values saved for the base-address, segment-limit, and access rights are based on whether the register was unusable (see Section 25.4.1) before the VM exit:

- If the register was unusable, the values saved into the following fields are undefined: (1) base address; (2) segment limit; and (3) bits 7:0 and bits 15:12 in the access-rights field. The following exceptions apply:
  - CS.
    - The base-address and segment-limit fields are saved.
    - The L, D, and G bits are saved in the access-rights field.
  - SS.
    - DPL is saved in the access-rights field.
    - On processors that support Intel 64 architecture, bits 63:32 of the value saved for the base address are always zero.
  - DS and ES. On processors that support Intel 64 architecture, bits 63:32 of the values saved for the base addresses are always zero.
  - FS and GS. The base-address field is saved.
  - LDTR. The value saved for the base address is always canonical.
- If the register was not unusable, the values saved into the following fields are those which were in the register before the VM exit: (1) base address; (2) segment limit; and (3) bits 7:0 and bits 15:12 in access rights.
- Bits 31:17 and 11:8 in the access-rights field are always cleared. Bit 16 is set to 1 if and only if the segment is unusable.

The contents of the GDTR and IDTR registers are saved into the corresponding base-address and limit fields.

28.3.3 Saving RIP, RSP, RFLAGS, and SSP

The contents of the RIP, RSP, RFLAGS, and SSP (shadow-stack pointer) registers are saved as follows:

- The value saved in the RIP field is determined by the nature and cause of the VM exit:
  - If the VM exit occurred in enclave mode, the value saved is the AEP of interrupted enclave thread (the remaining items do not apply).

  - If the VM exit occurs due to by an attempt to execute an instruction that causes VM exits unconditionally or that has been configured to cause a VM exit via the VM-execution controls, the value saved references that instruction.
  - If the VM exit is caused by an occurrence of an INIT signal, a start-up IPI (SIPI), or system-management interrupt (SMI), the value saved is that which was in RIP before the event occurred.
  - If the VM exit occurs due to the 1-setting of either the "interrupt-window exiting" VM-execution control or the "NMI-window exiting" VM-execution control, the value saved is that which would be in the register had the VM exit not occurred.
  - If the VM exit is due to an external interrupt, non-maskable interrupt (NMI), or hardware exception (as defined in Section 28.2.2), the value saved is the return pointer that would have been saved (either on the stack had the event been delivered through a trap or interrupt gate,[1] or into the old task-state segment had the event been delivered through a task gate).
  - If the VM exit is due to a triple fault, the value saved is the return pointer that would have been saved (either on the stack had the event been delivered through a trap or interrupt gate, or into the old task-state segment had the event been delivered through a task gate) had delivery of the double fault not encountered the nested exception that caused the triple fault.
  - If the VM exit is due to a software exception (due to an execution of INT3 or INTO) or a privileged software exception (due to an execution of INT1), the value saved references the INT3, INTO, or INT1 instruction that caused that exception.
  - Suppose that the VM exit is due to a task switch that was caused by execution of CALL, IRET, or JMP or by execution of a software interrupt (INT *n*), software exception (due to execution of INT3 or INTO), or privileged software exception (due to execution of INT1) that encountered a task gate in the IDT. The value saved references the instruction that caused the task switch (CALL, IRET, JMP, INT *n*, INT3, INTO, INT1).
  - Suppose that the VM exit is due to a task switch that was caused by a task gate in the IDT that was encountered for any reason except the direct access by a software interrupt or software exception. The value saved is that which would have been saved in the old task-state segment had the task switch completed normally.
  - If the VM exit is due to an execution of MOV to CR8 or WRMSR that reduced the value of bits 7:4 of VTPR (see Section 30.1.1) below that of TPR threshold VM-execution control field (see Section 30.1.2), the value saved references the instruction following the MOV to CR8 or WRMSR.
  - If the VM exit was caused by APIC-write emulation (see Section 30.4.3.2) that results from an APIC access as part of instruction execution, the value saved references the instruction following the one whose execution caused the APIC-write emulation.
- The contents of the RSP register are saved into the RSP field.
- With the exception of the resume flag (RF; bit 16), the contents of the RFLAGS register is saved into the RFLAGS field. RFLAGS.RF is saved as follows:
  - If the VM exit occurred in enclave mode, the value saved is 0 (the remaining items do not apply).
  - If the VM exit is caused directly by an event that would normally be delivered through the IDT, the value saved is that which would appear in the saved RFLAGS image (either that which would be saved on the stack had the event been delivered through a trap or interrupt gate[2] or into the old task-state segment had the event been delivered through a task gate) had the event been delivered through the IDT. See below for VM exits due to task switches caused by task gates in the IDT.
  - If the VM exit is caused by a triple fault, the value saved is that which the logical processor would have in RF in the RFLAGS register had the triple fault taken the logical processor to the shutdown state.
  - If the VM exit is caused by a task switch (including one caused by a task gate in the IDT), the value saved is that which would have been saved in the RFLAGS image in the old task-state segment (TSS) had the task switch completed normally without exception.

1. The reference here is to the full value of RIP before any truncation that would occur had the stack width been only 32 bits or 16 bits.
2. The reference here is to the full value of RFLAGS before any truncation that would occur had the stack width been only 32 bits or 16 bits.

— If the VM exit is caused by an attempt to execute an instruction that unconditionally causes VM exits or one that was configured to do with a VM-execution control, the value saved is 0.[1]

— For APIC-access VM exits and for VM exits caused by EPT violations, EPT misconfigurations, page-modification log-full events, or SPP-related events, the value saved depends on whether the VM exit occurred during delivery of an event through the IDT:

  • If the VM exit stored 0 for bit 31 for IDT-vectoring information field (because the VM exit did not occur during delivery of an event through the IDT; see Section 28.2.4), the value saved is 1.

  • If the VM exit stored 1 for bit 31 for IDT-vectoring information field (because the VM exit did occur during delivery of an event through the IDT), the value saved is the value that would have appeared in the saved RFLAGS image had the event been delivered through the IDT (see above).

— For all other VM exits, the value saved is the value RFLAGS.RF had before the VM exit occurred.

- If the processor supports the 1-setting of the "load CET" VM-entry control, the contents of the SSP register are saved into the SSP field.

28.3.4 Saving Non-Register State

Information corresponding to guest non-register state is saved as follows:

- The activity-state field is saved with the logical processor's activity state before the VM exit.[2] See Section 28.1 for details of how events leading to a VM exit may affect the activity state. If the VM exit occurred during user-interrupt notification processing (see Section 7.5.2) and the logical processor would have entered the HLT state following user-interrupt notification processing, the saved activity state is "HLT".
- The interruptibility-state field is saved to reflect the logical processor's interruptibility before the VM exit.

  — See Section 28.1 for details of how events leading to a VM exit may affect this state.

  — VM exits that end outside system-management mode (SMM) save bit 2 (blocking by SMI) as 0 regardless of the state of such blocking before the VM exit.

  — Bit 3 (blocking by NMI) is treated specially if the "virtual NMIs" VM-execution control is 1. In this case, the value saved for this field does not indicate the blocking of NMIs but rather the state of virtual-NMI blocking.

  — Bit 4 (enclave interruption) is set to 1 if the VM exit occurred while the logical processor was in enclave mode.

    Such VM exits includes those caused by interrupts, non-maskable interrupts, system-management interrupts, INIT signals, and exceptions occurring in enclave mode as well as exceptions encountered during the delivery of such events incident to enclave mode.

    A VM exit that is incident to delivery of an event injected by VM entry leaves this bit unmodified.
- The pending debug exceptions field is saved as clear for all VM exits except the following:

  — A VM exit caused by an INIT signal, a machine-check exception, or a system-management interrupt (SMI).

  — A VM exit with basic exit reason "TPR below threshold",[3] "virtualized EOI", "APIC write", or "monitor trap flag."

  — A VM exit due to trace-address pre-translation (TAPT; see Section 26.5.4) or due to accesses related to PEBS on processors with the "EPT-friendly" enhancement (see Section 20.9.5). Such VM exits can have basic exit reason "APIC access," "EPT violation," "EPT misconfiguration," "page-modification log full," or "SPP-related event." When due to TAPT or PEBS, these VM exits (with the exception of those due to EPT

1. This is true even if RFLAGS.RF was 1 before the instruction was executed. If, in response to such a VM exit, a VM monitor re-enters the guest to re-execute the instruction that caused the VM exit (for example, after clearing the VM-execution control that caused the VM exit), the instruction may encounter a code breakpoint that has already been processed. A VM monitor can avoid this by setting the guest value of RFLAGS.RF to 1 before resuming guest software.
2. If this activity state was an inactive state resulting from execution of a specific instruction (HLT or MWAIT), the value saved for RIP by that VM exit will reference the following instruction.
3. This item includes VM exits that occur as a result of certain VM entries (Section 27.7.7).

misconfigurations) set bit 16 of the exit qualification, indicating that they are asynchronous to instruction execution and not part of event delivery.

— VM exits that are not caused by debug exceptions and that occur while there is MOV-SS blocking of debug exceptions.

For VM exits that do not clear the field, the value saved is determined as follows:

— Each of bits 3:0 may be set if it corresponds to a matched breakpoint. This may be true even if the corresponding breakpoint is not enabled in DR7.

— Suppose that a VM exit is due to an INIT signal, a machine-check exception, or an SMI; or that a VM exit has basic exit reason "TPR below threshold" or "monitor trap flag." In this case, the value saved sets bits corresponding to the causes of any debug exceptions that were pending at the time of the VM exit.

If the VM exit occurs immediately after VM entry, the value saved may match that which was loaded on VM entry (see Section 27.7.3). Otherwise, the following items apply:

- Bit 12 (enabled breakpoint) is set to 1 in any of the following cases:
  — If there was at least one matched data or I/O breakpoint that was enabled in DR7.
  — If it had been set on VM entry, causing there to be valid pending debug exceptions (see Section 27.7.3) and the VM exit occurred before those exceptions were either delivered or lost.
  — If the XBEGIN instruction was executed immediately before the VM exit and advanced debugging of RTM transactional regions had been enabled (see Section 16.3.7, "RTM-Enabled Debugger Support," of *Intel® 64 and IA-32 Architectures Software Developer's Manual, Volume 1*). (This does not apply to VM exits with basic exit reason "monitor trap flag.")

  In other cases, bit 12 is cleared to 0.
- Bit 14 (BS) is set if RFLAGS.TF = 1 in either of the following cases:
  — IA32_DEBUGCTL.BTF = 0 and the cause of a pending debug exception was the execution of a single instruction.
  — IA32_DEBUGCTL.BTF = 1 and the cause of a pending debug exception was a taken branch.
- Bit 16 (RTM) is set if a debug exception (#DB) or a breakpoint exception (#BP) occurred inside an RTM region while advanced debugging of RTM transactional regions had been enabled. (This does not apply to VM exits with basic exit reason "monitor trap flag.")

— Suppose that a VM exit is due to another reason (but not a debug exception) and occurs while there is MOV-SS blocking of debug exceptions. In this case, the value saved sets bits corresponding to the causes of any debug exceptions that were pending at the time of the VM exit. If the VM exit occurs immediately after VM entry (no instructions were executed in VMX non-root operation), the value saved may match that which was loaded on VM entry (see Section 27.7.3). Otherwise, the following items apply:

- Bit 12 (enabled breakpoint) is set to 1 if there was at least one matched data or I/O breakpoint that was enabled in DR7. Bit 12 is also set if it had been set on VM entry, causing there to be valid pending debug exceptions (see Section 27.7.3) and the VM exit occurred before those exceptions were either delivered or lost. In other cases, bit 12 is cleared to 0.
- The setting of bit 14 (BS) is implementation-specific. However, it is not set if RFLAGS.TF = 0 or IA32_DEBUGCTL.BTF = 1.

— The reserved bits in the field are cleared.

- If the "save VMX-preemption timer value" VM-exit control is 1, the value of timer is saved into the VMX-preemption timer-value field. This is the value loaded from this field on VM entry as subsequently decremented (see Section 26.5.1). VM exits due to timer expiration save the value 0. Other VM exits may also save the value 0 if the timer expired during VM exit. (If the "save VMX-preemption timer value" VM-exit control is 0, VM exit does not modify the value of the VMX-preemption timer-value field.)
- If the logical processor supports the 1-setting of the "enable EPT" VM-execution control, values are saved into the four (4) PDPTE fields as follows:

  — If the "enable EPT" VM-execution control is 1 and the logical processor was using PAE paging at the time of the VM exit, the PDPTE values currently in use are saved:[1]

- The values saved into bits 11:9 of each of the fields is undefined.
- If the value saved into one of the fields has bit 0 (present) clear, the value saved into bits 63:1 of that field is undefined. That value need not correspond to the value that was loaded by VM entry or to any value that might have been loaded in VMX non-root operation.
- If the value saved into one of the fields has bit 0 (present) set, the value saved into bits 63:12 of the field is a guest-physical address.

— If the "enable EPT" VM-execution control is 0 or the logical processor was not using PAE paging at the time of the VM exit, the values saved are undefined.

28.4 SAVING MSRS

After processor state is saved to the guest-state area, values of MSRs may be stored into the VM-exit MSR-store area (see Section 25.7.2). Specifically each entry in that area (up to the number specified in the VM-exit MSR-store count) is processed in order by storing the value of the MSR indexed by bits 31:0 (as they would be read by RDMSR) into bits 127:64. Processing of an entry fails in either of the following cases:

- The value of bits 31:8 is 000008H, meaning that the indexed MSR is one that allows access to an APIC register when the local APIC is in x2APIC mode.
- The value of bits 31:0 indicates an MSR that can be read only in system-management mode (SMM) and the VM exit will not end in SMM. (IA32_SMBASE is an MSR that can be read only in SMM.)
- The value of bits 31:0 indicates an MSR that cannot be saved on VM exits for model-specific reasons. A processor may prevent certain MSRs (based on the value of bits 31:0) from being stored on VM exits, even if they can normally be read by RDMSR. Such model-specific behavior is documented in Chapter 2, "Model-Specific Registers (MSRs)" in the *Intel® 64 and IA-32 Architectures Software Developer's Manual, Volume 4*.
- Bits 63:32 of the entry are not all 0.
- An attempt to read the MSR indexed by bits 31:0 would cause a general-protection exception if executed via RDMSR with CPL = 0.

A VMX abort occurs if processing fails for any entry. See Section 28.7.

28.5 LOADING HOST STATE

Processor state is updated on VM exits in the following ways:

- Some state is loaded from or otherwise determined by the contents of the host-state area.
- Some state is determined by VM-exit controls.
- Some state is established in the same way on every VM exit.
- The page-directory pointers are loaded based on the values of certain control registers.

This loading may be performed in any order.

On processors that support Intel 64 architecture, the full values of each 64-bit field loaded (for example, the base address for GDTR) is loaded regardless of the mode of the logical processor before and after the VM exit.

The loading of host state is detailed in Section 28.5.1 to Section 28.5.5. These sections reference VMCS fields that correspond to processor state. Unless otherwise stated, these references are to fields in the host-state area.

A logical processor is in IA-32e mode after a VM exit only if the "host address-space size" VM-exit control is 1. If the logical processor was in IA-32e mode before the VM exit and this control is 0, a VMX abort occurs. See Section 28.7.

---

1. A logical processor uses PAE paging if CR0.PG = 1, CR4.PAE = 1 and IA32_EFER.LMA = 0. See Section 4.4 in the *Intel® 64 and IA-32 Architectures Software Developer's Manual, Volume 3A*. "Enable EPT" is a secondary processor-based VM-execution control. If bit 31 of the primary processor-based VM-execution controls is 0, VM exit functions as if the "enable EPT" VM-execution control were 0. See Section 25.6.2.

In addition to loading host state, VM exits clear address-range monitoring (Section 28.5.6).

After the state loading described in this section, VM exits may load MSRs from the VM-exit MSR-load area (see Section 28.6). This loading occurs only after the state loading described in this section.

28.5.1 Loading Host Control Registers, Debug Registers, MSRs

VM exits load new values for controls registers, debug registers, and some MSRs:

- CR0, CR3, and CR4 are loaded from the CR0 field, the CR3 field, and the CR4 field, respectively, with the following exceptions:
  - The following bits are not modified:
    - For CR0, ET, CD, NW; bits 63:32 (on processors that support Intel 64 architecture), 28:19, 17, and 15:6; and any bits that are fixed in VMX operation (see Section 24.8).[1]
    - For CR3, bits 63:52 and bits in the range 51:32 beyond the processor's physical-address width (they are cleared to 0).[2] (This item applies only to processors that support Intel 64 architecture.)
    - For CR4, any bits that are fixed in VMX operation (see Section 24.8).
  - CR4.PAE is set to 1 if the "host address-space size" VM-exit control is 1.
  - CR4.PCIDE is set to 0 if the "host address-space size" VM-exit control is 0.
- DR7 is set to 400H.
- If the "clear UINV" VM-exit control is 1, VM exit clears UINV.
- The following MSRs are established as follows:
  - The IA32_DEBUGCTL MSR is cleared to 00000000_00000000H.
  - The IA32_SYSENTER_CS MSR is loaded from the IA32_SYSENTER_CS field. Since that field has only 32 bits, bits 63:32 of the MSR are cleared to 0.
  - The IA32_SYSENTER_ESP and IA32_SYSENTER_EIP MSRs are loaded from the IA32_SYSENTER_ESP and IA32_SYSENTER_EIP fields, respectively.

    If the processor does not support the Intel 64 architecture, these fields have only 32 bits; bits 63:32 of the MSRs are cleared to 0.

    If the processor supports the Intel 64 architecture with N < 64 linear-address bits, each of bits 63:N is set to the value of bit N–1.[3]
  - The following steps are performed on processors that support Intel 64 architecture:
    - The MSRs FS.base and GS.base are loaded from the base-address fields for FS and GS, respectively (see Section 28.5.2).
    - The LMA and LME bits in the IA32_EFER MSR are each loaded with the setting of the "host address-space size" VM-exit control.
  - If the "load IA32_PERF_GLOBAL_CTRL" VM-exit control is 1, the IA32_PERF_GLOBAL_CTRL MSR is loaded from the IA32_PERF_GLOBAL_CTRL field. Bits that are reserved in that MSR are maintained with their reserved values.
  - If the "load IA32_PAT" VM-exit control is 1, the IA32_PAT MSR is loaded from the IA32_PAT field. Bits that are reserved in that MSR are maintained with their reserved values.

1. Bits 28:19, 17, and 15:6 of CR0 and CR0.ET are unchanged by executions of MOV to CR0. CR0.ET is always 1 and the other bits are always 0.
2. Software can determine a processor's physical-address width by executing CPUID with 80000008H in EAX. The physical-address width is returned in bits 7:0 of EAX.
3. Software can determine the number N by executing CPUID with 80000008H in EAX. The number of linear-address bits supported is returned in bits 15:8 of EAX.

— If the "load IA32_EFER" VM-exit control is 1, the IA32_EFER MSR is loaded from the IA32_EFER field. Bits that are reserved in that MSR are maintained with their reserved values.

— If the "clear IA32_BNDCFGS" VM-exit control is 1, the IA32_BNDCFGS MSR is cleared to 00000000_00000000H; otherwise, it is not modified.

— If the "clear IA32_RTIT_CTL" VM-exit control is 1, the IA32_RTIT_CTL MSR is cleared to 00000000_00000000H; otherwise, it is not modified.

— If the "load CET" VM-exit control is 1, the IA32_S_CET and IA32_INTERRUPT_SSP_TABLE_ADDR MSRs are loaded from the IA32_S_CET and IA32_INTERRUPT_SSP_TABLE_ADDR fields, respectively.

If the processor does not support the Intel 64 architecture, these fields have only 32 bits; bits 63:32 of the MSRs are cleared to 0.

If the processor supports the Intel 64 architecture with N < 64 linear-address bits, each of bits 63:N is set to the value of bit N–1.

— If the "load PKRS" VM-exit control is 1, the IA32_PKRS MSR is loaded from the IA32_PKRS field. Bits 63:32 of that MSR are maintained with zeroes.

With the exception of FS.base and GS.base, any of these MSRs is subsequently overwritten if it appears in the VM-exit MSR-load area. See Section 28.6.

28.5.2 Loading Host Segment and Descriptor-Table Registers

Each of the registers CS, SS, DS, ES, FS, GS, and TR is loaded as follows (see below for the treatment of LDTR):

- The selector is loaded from the selector field. The segment is unusable if its selector is loaded with zero. The checks specified Section 27.3.1.2 limit the selector values that may be loaded. In particular, CS and TR are never loaded with zero and are thus never unusable. SS can be loaded with zero only on processors that support Intel 64 architecture and only if the VM exit is to 64-bit mode (64-bit mode allows use of segments marked unusable).
- The base address is set as follows:
  — CS. Cleared to zero.
  — SS, DS, and ES. Undefined if the segment is unusable; otherwise, cleared to zero.
  — FS and GS. Undefined (but, on processors that support Intel 64 architecture, canonical) if the segment is unusable and the VM exit is not to 64-bit mode; otherwise, loaded from the base-address field.

  If the processor supports the Intel 64 architecture and the processor supports N < 64 linear-address bits, each of bits 63:N is set to the value of bit N–1.[1] The values loaded for base addresses for FS and GS are also manifest in the FS.base and GS.base MSRs.
  — TR. Loaded from the host-state area. If the processor supports the Intel 64 architecture and the processor supports N < 64 linear-address bits, each of bits 63:N is set to the value of bit N–1.
- The segment limit is set as follows:
  — CS. Set to FFFFFFFFH (corresponding to a descriptor limit of FFFFFH and a G-bit setting of 1).
  — SS, DS, ES, FS, and GS. Undefined if the segment is unusable; otherwise, set to FFFFFFFFH.
  — TR. Set to 00000067H.
- The type field and S bit are set as follows:
  — CS. Type set to 11 and S set to 1 (execute/read, accessed, non-conforming code segment).
  — SS, DS, ES, FS, and GS. Undefined if the segment is unusable; otherwise, type set to 3 and S set to 1 (read/write, accessed, expand-up data segment).
  — TR. Type set to 11 and S set to 0 (busy 32-bit task-state segment).
- The DPL is set as follows:

1. Software can determine the number N by executing CPUID with 80000008H in EAX. The number of linear-address bits supported is returned in bits 15:8 of EAX.

  - CS, SS, and TR. Set to 0. The current privilege level (CPL) will be 0 after the VM exit completes.
  - DS, ES, FS, and GS. Undefined if the segment is unusable; otherwise, set to 0.
- The P bit is set as follows:
  - CS, TR. Set to 1.
  - SS, DS, ES, FS, and GS. Undefined if the segment is unusable; otherwise, set to 1.
- On processors that support Intel 64 architecture, CS.L is loaded with the setting of the "host address-space size" VM-exit control. Because the value of this control is also loaded into IA32_EFER.LMA (see Section 28.5.1), no VM exit is ever to compatibility mode (which requires IA32_EFER.LMA = 1 and CS.L = 0).
- D/B.
  - CS. Loaded with the inverse of the setting of the "host address-space size" VM-exit control. For example, if that control is 0, indicating a 32-bit guest, CS.D/B is set to 1.
  - SS. Set to 1.
  - DS, ES, FS, and GS. Undefined if the segment is unusable; otherwise, set to 1.
  - TR. Set to 0.
- G.
  - CS. Set to 1.
  - SS, DS, ES, FS, and GS. Undefined if the segment is unusable; otherwise, set to 1.
  - TR. Set to 0.

The host-state area does not contain a selector field for LDTR. LDTR is established as follows on all VM exits: the selector is cleared to 0000H, the segment is marked unusable and is otherwise undefined (although the base address is always canonical).

The base addresses for GDTR and IDTR are loaded from the GDTR base-address field and the IDTR base-address field, respectively. If the processor supports the Intel 64 architecture and the processor supports N < 64 linear-address bits, each of bits 63:N of each base address is set to the value of bit N–1 of that base address. The GDTR and IDTR limits are each set to FFFFH.

28.5.3 Loading Host RIP, RSP, RFLAGS, and SSP

RIP and RSP are loaded from the RIP field and the RSP field, respectively. RFLAGS is cleared, except bit 1, which is always set.

If the "load CET" VM-exit control is 1, SSP (shadow-stack pointer) is loaded from the SSP field.

28.5.4 Checking and Loading Host Page-Directory-Pointer-Table Entries

If CR0.PG = 1, CR4.PAE = 1, and IA32_EFER.LMA = 0, the logical processor uses **PAE paging**. See Section 4.4 of the *Intel® 64 and IA-32 Architectures Software Developer's Manual, Volume 3A*.[1] When in PAE paging is in use, the physical address in CR3 references a table of **page-directory-pointer-table entries** (PDPTEs). A MOV to CR3 when PAE paging is in use checks the validity of the PDPTEs and, if they are valid, loads them into the processor (into internal, non-architectural registers).

A VM exit is to a VMM that uses PAE paging if (1) bit 5 (corresponding to CR4.PAE) is set in the CR4 field in the host-state area of the VMCS; and (2) the "host address-space size" VM-exit control is 0. Such a VM exit may check the validity of the PDPTEs referenced by the CR3 field in the host-state area of the VMCS. Such a VM exit must check their validity if either (1) PAE paging was not in use before the VM exit; or (2) the value of CR3 is changing as a result of the VM exit. A VM exit to a VMM that does not use PAE paging must not check the validity of the PDPTEs.

1. On processors that support Intel 64 architecture, the physical-address extension may support more than 36 physical-address bits. Software can determine a processor's physical-address width by executing CPUID with 80000008H in EAX. The physical-address width is returned in bits 7:0 of EAX.

A VM exit that checks the validity of the PDPTEs uses the same checks that are used when CR3 is loaded with MOV to CR3 when PAE paging is in use. If MOV to CR3 would cause a general-protection exception due to the PDPTEs that would be loaded (e.g., because a reserved bit is set), a VMX abort occurs (see Section 28.7). If a VM exit to a VMM that uses PAE does not cause a VMX abort, the PDPTEs are loaded into the processor as would MOV to CR3, using the value of CR3 being load by the VM exit.

28.5.5 Updating Non-Register State

VM exits affect the non-register state of a logical processor as follows:

- A logical processor is always in the active state after a VM exit.
- Event blocking is affected as follows:
  - — There is no blocking by STI or by MOV SS after a VM exit.
  - — VM exits caused directly by non-maskable interrupts (NMIs) cause blocking by NMI (see Table 25-3). Other VM exits do not affect blocking by NMI. (See Section 28.1 for the case in which an NMI causes a VM exit indirectly.)
- There are no pending debug exceptions after a VM exit.

Section 29.4 describes how the VMX architecture controls how a logical processor manages information in the TLBs and paging-structure caches. The following items detail how VM exits invalidate cached mappings:

- If the "enable VPID" VM-execution control is 0, the logical processor invalidates linear mappings and combined mappings associated with VPID 0000H (for all PCIDs); combined mappings for VPID 0000H are invalidated for all EP4TA values (EP4TA is the value of bits 51:12 of EPTP).
- VM exits are not required to invalidate any guest-physical mappings, nor are they required to invalidate any linear mappings or combined mappings if the "enable VPID" VM-execution control is 1.

28.5.6 Clearing Address-Range Monitoring

The Intel 64 and IA-32 architectures allow software to monitor a specified address range using the MONITOR and MWAIT instructions. See Section 9.10.4 in the *Intel® 64 and IA-32 Architectures Software Developer's Manual, Volume 3A*. VM exits clear any address-range monitoring that may be in effect.

28.6 LOADING MSRS

VM exits may load MSRs from the VM-exit MSR-load area (see Section 25.7.2). Specifically each entry in that area (up to the number specified in the VM-exit MSR-load count) is processed in order by loading the MSR indexed by bits 31:0 with the contents of bits 127:64 as they would be written by WRMSR.

Processing of an entry fails in any of the following cases:

- The value of bits 31:0 is either C0000100H (the IA32_FS_BASE MSR) or C0000101H (the IA32_GS_BASE MSR).
- The value of bits 31:8 is 000008H, meaning that the indexed MSR is one that allows access to an APIC register when the local APIC is in x2APIC mode.
- The value of bits 31:0 indicates an MSR that can be written only in system-management mode (SMM) and the VM exit will not end in SMM. (IA32_SMM_MONITOR_CTL is an MSR that can be written only in SMM.)
- The value of bits 31:0 indicates an MSR that cannot be loaded on VM exits for model-specific reasons. A processor may prevent loading of certain MSRs even if they can normally be written by WRMSR. Such model-specific behavior is documented in Chapter 2, "Model-Specific Registers (MSRs)" in the *Intel® 64 and IA-32 Architectures Software Developer's Manual, Volume 4*.
- Bits 63:32 are not all 0.
- An attempt to write bits 127:64 to the MSR indexed by bits 31:0 of the entry would cause a general-protection exception if executed via WRMSR with CPL = 0.[1]

If processing fails for any entry, a VMX abort occurs. See Section 28.7.

If any MSR is being loaded in such a way that would architecturally require a TLB flush, the TLBs are updated so that, after VM exit, the logical processor does not use any translations that were cached before the transition.

28.7 VMX ABORTS

A problem encountered during a VM exit leads to a **VMX abort**. A VMX abort takes a logical processor into a shut-down state as described below.

A VMX abort does not modify the VMCS data in the VMCS region of any active VMCS. The contents of these data are thus suspect after the VMX abort.

On a VMX abort, a logical processor saves a nonzero 32-bit VMX-abort indicator field at byte offset 4 in the VMCS region of the VMCS whose misconfiguration caused the failure (see Section 25.2). The following values are used:

1. There was a failure in saving guest MSRs (see Section 28.4).
2. Host checking of the page-directory-pointer-table entries (PDPTEs) failed (see Section 28.5.4).
3. The current VMCS has been corrupted (through writes to the corresponding VMCS region) in such a way that the logical processor cannot complete the VM exit properly.
4. There was a failure on loading host MSRs (see Section 28.6).
5. There was a machine-check event during VM exit (see Section 28.8).
6. The logical processor was in IA-32e mode before the VM exit and the "host address-space size" VM-exit control was 0 (see Section 28.5).

Some of these causes correspond to failures during the loading of state from the host-state area. Because the loading of such state may be done in any order (see Section 28.5) a VM exit that might lead to a VMX abort for multiple reasons (for example, the current VMCS may be corrupt and the host PDPTEs might not be properly configured). In such cases, the VMX-abort indicator could correspond to any one of those reasons.

A logical processor never reads the VMX-abort indicator in a VMCS region and writes it only with one of the non-zero values mentioned above. The VMX-abort indicator allows software on one logical processor to diagnose the VMX-abort on another. For this reason, it is recommended that software running in VMX root operation zero the VMX-abort indicator in the VMCS region of any VMCS that it uses.

After saving the VMX-abort indicator, operation of a logical processor experiencing a VMX abort depends on whether the logical processor is in SMX operation:[1]

- If the logical processor is in SMX operation, an Intel® TXT shutdown condition occurs. The error code used is 000DH, indicating "VMX abort." See *Intel® Trusted Execution Technology Measured Launched Environment Programming Guide*.
- If the logical processor is outside SMX operation, it issues a special bus cycle (to notify the chipset) and enters the **VMX-abort shutdown state**. RESET is the only event that wakes a logical processor from the VMX-abort shutdown state. The following events do not affect a logical processor in this state: machine-check events; INIT signals; external interrupts; non-maskable interrupts (NMIs); start-up IPIs (SIPIs); and system-management interrupts (SMIs).

1. Note the following about processors that support Intel 64 architecture. If CR0.PG = 1, WRMSR to the IA32_EFER MSR causes a general-protection exception if it would modify the LME bit. Since CR0.PG is always 1 in VMX operation, the IA32_EFER MSR should not be included in the VM-exit MSR-load area for the purpose of modifying the LME bit.

1. A logical processor is in SMX operation if GETSEC[SEXIT] has not been executed since the last execution of GETSEC[SENTER]. A logical processor is outside SMX operation if GETSEC[SENTER] has not been executed or if GETSEC[SEXIT] was executed after the last execution of GETSEC[SENTER]. See Chapter 6, "Safer Mode Extensions Reference," in *Intel® 64 and IA-32 Architectures Software Developer's Manual, Volume 2B*.

28.8 MACHINE-CHECK EVENTS DURING VM EXIT

If a machine-check event occurs during VM exit, one of the following occurs:

- The machine-check event is handled as if it occurred before the VM exit:
  - If CR4.MCE = 0, operation of the logical processor depends on whether the logical processor is in SMX operation:[1]
    - If the logical processor is in SMX operation, an Intel® TXT shutdown condition occurs. The error code used is 000CH, indicating "unrecoverable machine-check condition."
    - If the logical processor is outside SMX operation, it goes to the shutdown state.
  - If CR4.MCE = 1, a machine-check exception (#MC) is generated:
    - If bit 18 (#MC) of the exception bitmap is 0, the exception is delivered through the guest IDT.
    - If bit 18 of the exception bitmap is 1, the exception causes a VM exit.
- The machine-check event is handled after VM exit completes:
  - If the VM exit ends with CR4.MCE = 0, operation of the logical processor depends on whether the logical processor is in SMX operation:
    - If the logical processor is in SMX operation, an Intel® TXT shutdown condition occurs with error code 000CH (unrecoverable machine-check condition).
    - If the logical processor is outside SMX operation, it goes to the shutdown state.
  - If the VM exit ends with CR4.MCE = 1, a machine-check exception (#MC) is delivered through the host IDT.
- A VMX abort is generated (see Section 28.7). The logical processor blocks events as done normally in VMX abort. The VMX abort indicator is 5, for "machine-check event during VM exit."

The first option is not used if the machine-check event occurs after any host state has been loaded. The second option is used only if VM entry is able to load all host state.

28.9 USER-INTERRUPT RECOGNITION AFTER VM EXIT

A VM exit results in recognition of a pending user interrupt if it completes with CR4.UINTR = IA32_EFER.LMA = 1 and with UIRR ≠ 0; otherwise, no pending user interrupt is recognized.

1. A logical processor is in SMX operation if GETSEC[SEXIT] has not been executed since the last execution of GETSEC[SENTER]. A logical processor is outside SMX operation if GETSEC[SENTER] has not been executed or if GETSEC[SEXIT] was executed after the last execution of GETSEC[SENTER]. See Chapter 6, "Safer Mode Extensions Reference," in *Intel® 64 and IA-32 Architectures Software Developer's Manual, Volume 2B*.

CHAPTER 29
VMX SUPPORT FOR ADDRESS TRANSLATION

The architecture for VMX operation includes two features that support address translation: virtual-processor identifiers (VPIDs) and the extended page-table mechanism (EPT). VPIDs are a mechanism for managing translations of linear addresses. EPT defines a layer of address translation that augments the translation of linear addresses.

Section 29.1 details the architecture of VPIDs. Section 29.3 provides the details of EPT. Section 29.4 explains how a logical processor may cache information from the paging structures, how it may use that cached information, and how software can managed the cached information.

29.1 VIRTUAL PROCESSOR IDENTIFIERS (VPIDS)

The original architecture for VMX operation required VMX transitions to flush the TLBs and paging-structure caches. This ensured that translations cached for the old linear-address space would not be used after the transition.

Virtual-processor identifiers (**VPIDs**) introduce to VMX operation a facility by which a logical processor may cache information for multiple linear-address spaces. When VPIDs are used, VMX transitions may retain cached information and the logical processor switches to a different linear-address space.

Section 29.4 details the mechanisms by which a logical processor manages information cached for multiple address spaces. A logical processor may tag some cached information with a 16-bit VPID. This section specifies how the current VPID is determined at any point in time:

- The current VPID is 0000H in the following situations:
  - — Outside VMX operation. (This includes operation in system-management mode under the default treatment of SMIs and SMM with VMX operation; see Section 32.14.)
  - — In VMX root operation.
  - — In VMX non-root operation when the "enable VPID" VM-execution control is 0.
- If the logical processor is in VMX non-root operation and the "enable VPID" VM-execution control is 1, the current VPID is the value of the VPID VM-execution control field in the VMCS. (VM entry ensures that this value is never 0000H; see Section 27.2.1.1.)

VPIDs and PCIDs (see Section 4.10.1) can be used concurrently. When this is done, the processor associates cached information with both a VPID and a PCID. Such information is used only if the current VPID and PCID **both** match those associated with the cached information.

29.2 HYPERVISOR-MANAGED LINEAR-ADDRESS TRANSLATION (HLAT)

Hypervisor-managed linear-address translation (**HLAT**) is a feature that changes the way in which linear addresses are translated in VMX non-root operation. Instead of ordinary paging, translation uses a modified process called **HLAT paging**.

HLAT paging is used only if the "enable HLAT" VM-execution control is 1. HLAT paging is used only for the paging modes 4-level paging and 5-level paging. Because HLAT paging is a modification of ordinary paging, details of the feature are given in Section 4.5, which describes the operation of 4-level paging and 5-level paging.

29.3 THE EXTENDED PAGE TABLE MECHANISM (EPT)

The extended page-table mechanism (**EPT**) is a feature that can be used to support the virtualization of physical memory. When EPT is in use, certain addresses that would normally be treated as physical addresses (and used to access memory) are instead treated as **guest-physical addresses**. Guest-physical addresses are translated by traversing a set of **EPT paging structures** to produce physical addresses that are used to access memory.

- Section 29.3.1 gives an overview of EPT.
- Section 29.3.2 describes operation of EPT-based address translation.
- Section 29.3.3 discusses VM exits that may be caused by EPT.
- Section 29.3.7 describes interactions between EPT and memory typing.

29.3.1 EPT Overview

EPT is used when the "enable EPT" VM-execution control is 1.[1] It translates the guest-physical addresses used in VMX non-root operation and those used by VM entry for event injection.

The translation from guest-physical addresses to physical addresses is determined by a set of **EPT paging structures**. The EPT paging structures are similar to those used to translate linear addresses while the processor is in IA-32e mode. Section 29.3.2 gives the details of the EPT paging structures.

If CR0.PG = 1, linear addresses are translated through paging structures referenced through control register CR3.[2] While the "enable EPT" VM-execution control is 1, these are called **guest paging structures**. There are no guest paging structures if CR0.PG = 0.[3]

When the "enable EPT" VM-execution control is 1, the identity of **guest-physical addresses** depends on the value of CR0.PG:

- If CR0.PG = 0, each linear address is treated as a guest-physical address.
- If CR0.PG = 1, guest-physical addresses are those derived from the contents of control register CR3 and the guest paging structures. (This includes the values of the PDPTEs, which logical processors store in internal, non-architectural registers.) The latter includes (in page-table entries and in other paging-structure entries for which bit 7—PS—is 1) the addresses to which linear addresses are translated by the guest paging structures.

If CR0.PG = 1, the translation of a linear address to a physical address requires multiple translations of guest-physical addresses using EPT. Assume, for example, that CR4.PAE = CR4.PSE = 0. The translation of a 32-bit linear address then operates as follows:

- Bits 31:22 of the linear address select an entry in the guest page directory located at the guest-physical address in CR3. The guest-physical address of the guest page-directory entry (PDE) is translated through EPT to determine the guest PDE's physical address.
- Bits 21:12 of the linear address select an entry in the guest page table located at the guest-physical address in the guest PDE. The guest-physical address of the guest page-table entry (PTE) is translated through EPT to determine the guest PTE's physical address.
- Bits 11:0 of the linear address is the offset in the page frame located at the guest-physical address in the guest PTE. The guest-physical address determined by this offset is translated through EPT to determine the physical address to which the original linear address translates.

In addition to translating a guest-physical address to a physical address, EPT specifies the privileges that software is allowed when accessing the address. Attempts at disallowed accesses are called **EPT violations** and cause VM exits. See Section 29.3.3.

A processor uses EPT to translate guest-physical addresses only when those addresses are used to access memory. This principle implies the following:

- The MOV to CR3 instruction loads CR3 with a guest-physical address. Whether that address is translated through EPT depends on whether PAE paging is being used.[4]

---

1. "Enable EPT" is a secondary processor-based VM-execution control. If bit 31 of the primary processor-based VM-execution controls is 0, the logical processor operates as if the "enable EPT" VM-execution control were 0. See Section 25.6.2.
2. If HLAT paging is enabled, the processor uses the HLATP VMCS field instead of CR3. See Section 4.5.1. For simplicity, the remainder of this section refers only to CR3.
3. If the capability MSR IA32_VMX_CR0_FIXED0 reports that CR0.PG must be 1 in VMX operation, CR0.PG can be 0 in VMX non-root operation only if the "unrestricted guest" VM-execution control and bit 31 of the primary processor-based VM-execution controls are both 1.
4. A logical processor uses PAE paging if CR0.PG = 1, CR4.PAE = 1 and IA32_EFER.LMA = 0. See Section 4.4 in the *Intel® 64 and IA-32 Architectures Software Developer's Manual, Volume 3A*.

  - If PAE paging is not being used, the instruction does not use that address to access memory and does **not** cause it to be translated through EPT. (If CR0.PG = 1, the address will be translated through EPT on the next memory accessing using a linear address.)
  - If PAE paging is being used, the instruction loads the four (4) page-directory-pointer-table entries (PDPTEs) from that address and it **does** cause the address to be translated through EPT.
- Section 4.4.1 identifies executions of MOV to CR0 and MOV to CR4 that load the PDPTEs from the guest-physical address in CR3. Such executions cause that address to be translated through EPT.
- The PDPTEs contain guest-physical addresses. The instructions that load the PDPTEs (see above) do not use those addresses to access memory and do **not** cause them to be translated through EPT. The address in a PDPTE will be translated through EPT on the next memory accessing using a linear address that uses that PDPTE.

29.3.2 EPT Translation Mechanism

The EPT translation mechanism uses only bits 47:0 of each guest-physical address.[1] It uses a page-walk length of 4, meaning that at most 4 EPT paging-structure entries are accessed to translate a guest-physical address.[2]

These 48 bits are partitioned by the logical processor to traverse the EPT paging structures:

- A 4-KByte naturally aligned EPT PML4 table is located at the physical address specified in bits 51:12 of the extended-page-table pointer (EPTP), a VM-execution control field (see Table 25-9 in Section 25.6.11). An EPT PML4 table comprises 512 64-bit entries (EPT PML4Es). An EPT PML4E is selected using the physical address defined as follows:
  - Bits 63:52 are all 0.
  - Bits 51:12 are from the EPTP.
  - Bits 11:3 are bits 47:39 of the guest-physical address.
  - Bits 2:0 are all 0.

  Because an EPT PML4E is identified using bits 47:39 of the guest-physical address, it controls access to a 512-GByte region of the guest-physical-address space. The format of an EPT PML4E is given in Table 29-1.
- A 4-KByte naturally aligned EPT page-directory-pointer table is located at the physical address specified in bits 51:12 of the EPT PML4E. An EPT page-directory-pointer table comprises 512 64-bit entries (EPT PDPTEs). An EPT PDPTE is selected using the physical address defined as follows:
  - Bits 63:52 are all 0.
  - Bits 51:12 are from the EPT PML4E.
  - Bits 11:3 are bits 38:30 of the guest-physical address.
  - Bits 2:0 are all 0.

Because an EPT PDPTE is identified using bits 47:30 of the guest-physical address, it controls access to a 1-GByte region of the guest-physical-address space. Use of the EPT PDPTE depends on the value of bit 7 in that entry:[3]

- If bit 7 of the EPT PDPTE is 1, the EPT PDPTE maps a 1-GByte page. The final physical address is computed as follows:
  - Bits 63:52 are all 0.
  - Bits 51:30 are from the EPT PDPTE.

1. No processors supporting the Intel 64 architecture support more than 48 physical-address bits. Thus, no such processor can produce a guest-physical address with more than 48 bits. An attempt to use such an address causes a page fault. An attempt to load CR3 with such an address causes a general-protection fault. If PAE paging is being used, an attempt to load CR3 that would load a PDPTE with such an address causes a general-protection fault.
2. Future processors may include support for other EPT page-walk lengths. Software should read the VMX capability MSR IA32_VMX_EPT_VPID_CAP (see Appendix A.10) to determine what EPT page-walk lengths are supported.
3. Not all processors allow bit 7 of an EPT PDPTE to be set to 1. Software should read the VMX capability MSR IA32_VMX_EPT_VPID_CAP (see Appendix A.10) to determine whether this is allowed.

Table 29-1. Format of an EPT PML4 Entry (PML4E) that References an EPT Page-Directory-Pointer Table

Bit Position(s)	Contents
0	Read access; indicates whether reads are allowed from the 512-GByte region controlled by this entry
1	Write access; indicates whether writes are allowed to the 512-GByte region controlled by this entry
2	If the "mode-based execute control for EPT" VM-execution control is 0, execute access; indicates whether instruction fetches are allowed from the 512-GByte region controlled by this entry If that control is 1, execute access for supervisor-mode linear addresses; indicates whether instruction fetches are allowed from supervisor-mode linear addresses in the 512-GByte region controlled by this entry
7:3	Reserved (must be 0)
8	If bit 6 of EPTP is 1, accessed flag for EPT; indicates whether software has accessed the 512-GByte region controlled by this entry (see Section 29.3.5). Ignored if bit 6 of EPTP is 0
9	Ignored
10	Execute access for user-mode linear addresses. If the "mode-based execute control for EPT" VM-execution control is 1, indicates whether instruction fetches are allowed from user-mode linear addresses in the 512-GByte region controlled by this entry. If that control is 0, this bit is ignored.
11	Ignored
(N–1):12	Physical address of 4-KByte aligned EPT page-directory-pointer table referenced by this entry[1]
51:N	Reserved (must be 0)
63:52	Ignored

NOTES:

1. N is the physical-address width supported by the processor. Software can determine a processor's physical-address width by executing CPUID with 80000008H in EAX. The physical-address width is returned in bits 7:0 of EAX.

— Bits 29:0 are from the original guest-physical address.

The format of an EPT PDPTE that maps a 1-GByte page is given in Table 29-2.

- If bit 7 of the EPT PDPTE is 0, a 4-KByte naturally aligned EPT page directory is located at the physical address specified in bits 51:12 of the EPT PDPTE. The format of an EPT PDPTE that references an EPT page directory is given in Table 29-3.

Table 29-2. Format of an EPT Page-Directory-Pointer-Table Entry (PDPTE) that Maps a 1-GByte Page

Bit Position(s)	Contents
0	Read access; indicates whether reads are allowed from the 1-GByte page referenced by this entry
1	Write access; indicates whether writes are allowed to the 1-GByte page referenced by this entry
2	If the "mode-based execute control for EPT" VM-execution control is 0, execute access; indicates whether instruction fetches are allowed from the 1-GByte page controlled by this entry If that control is 1, execute access for supervisor-mode linear addresses; indicates whether instruction fetches are allowed from supervisor-mode linear addresses in the 1-GByte page controlled by this entry
5:3	EPT memory type for this 1-GByte page (see Section 29.3.7)
6	Ignore PAT memory type for this 1-GByte page (see Section 29.3.7)
7	Must be 1 (otherwise, this entry references an EPT page directory)
8	If bit 6 of EPTP is 1, accessed flag for EPT; indicates whether software has accessed the 1-GByte page referenced by this entry (see Section 29.3.5). Ignored if bit 6 of EPTP is 0
9	If bit 6 of EPTP is 1, dirty flag for EPT; indicates whether software has written to the 1-GByte page referenced by this entry (see Section 29.3.5). Ignored if bit 6 of EPTP is 0
10	Execute access for user-mode linear addresses. If the "mode-based execute control for EPT" VM-execution control is 1, indicates whether instruction fetches are allowed from user-mode linear addresses in the 1-GByte page controlled by this entry. If that control is 0, this bit is ignored.
11	Ignored
29:12	Reserved (must be 0)
(N–1):30	Physical address of the 1-GByte page referenced by this entry[1]
51:N	Reserved (must be 0)
56:52	Ignored
57	Verify guest paging. If the "guest-paging verification" VM-execution control is 1, indicates limits on the guest paging structures used to access the 1-GByte page controlled by this entry (see Section 29.3.3.2). If that control is 0, this bit is ignored.
58	Paging-write access. If the "EPT paging-write control" VM-execution control is 1, indicates that guest paging may update the 1-GByte page controlled by this entry (see Section 29.3.3.2). If that control is 0, this bit is ignored.
59	Ignored
60	Supervisor shadow stack. If bit 7 of EPTP is 1, indicates whether supervisor shadow stack accesses are allowed to guest-physical addresses in the 1-GByte page mapped by this entry (see Section 29.3.3.2). Ignored if bit 7 of EPTP is 0
62:61	Ignored
63	Suppress #VE. If the "EPT-violation #VE" VM-execution control is 1, EPT violations caused by accesses to this page are convertible to virtualization exceptions only if this bit is 0 (see Section 26.5.7.1). If "EPT-violation #VE" VM-execution control is 0, this bit is ignored.

NOTES:

1. N is the physical-address width supported by the logical processor.

Table 29-3. Format of an EPT Page-Directory-Pointer-Table Entry (PDPTE) that References an EPT Page Directory

Bit Position(s)	Contents
0	Read access; indicates whether reads are allowed from the 1-GByte region controlled by this entry
1	Write access; indicates whether writes are allowed to the 1-GByte region controlled by this entry
2	If the "mode-based execute control for EPT" VM-execution control is 0, execute access; indicates whether instruction fetches are allowed from the 1-GByte region controlled by this entry If that control is 1, execute access for supervisor-mode linear addresses; indicates whether instruction fetches are allowed from supervisor-mode linear addresses in the 1-GByte region controlled by this entry
7:3	Reserved (must be 0)
8	If bit 6 of EPTP is 1, accessed flag for EPT; indicates whether software has accessed the 1-GByte region controlled by this entry (see Section 29.3.5). Ignored if bit 6 of EPTP is 0
9	Ignored
10	Execute access for user-mode linear addresses. If the "mode-based execute control for EPT" VM-execution control is 1, indicates whether instruction fetches are allowed from user-mode linear addresses in the 1-GByte region controlled by this entry. If that control is 0, this bit is ignored.
11	Ignored
(N–1):12	Physical address of 4-KByte aligned EPT page directory referenced by this entry[1]
51:N	Reserved (must be 0)
63:52	Ignored

NOTES:

1. N is the physical-address width supported by the logical processor.

An EPT page-directory comprises 512 64-bit entries (PDEs). An EPT PDE is selected using the physical address defined as follows:

— Bits 63:52 are all 0.

— Bits 51:12 are from the EPT PDPTE.

— Bits 11:3 are bits 29:21 of the guest-physical address.

— Bits 2:0 are all 0.

Because an EPT PDE is identified using bits 47:21 of the guest-physical address, it controls access to a 2-MByte region of the guest-physical-address space. Use of the EPT PDE depends on the value of bit 7 in that entry:

- If bit 7 of the EPT PDE is 1, the EPT PDE maps a 2-MByte page. The final physical address is computed as follows:

  — Bits 63:52 are all 0.

  — Bits 51:21 are from the EPT PDE.

  — Bits 20:0 are from the original guest-physical address.

  The format of an EPT PDE that maps a 2-MByte page is given in Table 29-4.

- If bit 7 of the EPT PDE is 0, a 4-KByte naturally aligned EPT page table is located at the physical address specified in bits 51:12 of the EPT PDE. The format of an EPT PDE that references an EPT page table is given in Table 29-5.

  An EPT page table comprises 512 64-bit entries (PTEs). An EPT PTE is selected using a physical address defined as follows:

  — Bits 63:52 are all 0.

Table 29-4. Format of an EPT Page-Directory Entry (PDE) that Maps a 2-MByte Page

Bit Position(s)	Contents
0	Read access; indicates whether reads are allowed from the 2-MByte page referenced by this entry
1	Write access; indicates whether writes are allowed to the 2-MByte page referenced by this entry
2	If the "mode-based execute control for EPT" VM-execution control is 0, execute access; indicates whether instruction fetches are allowed from the 2-MByte page controlled by this entry If that control is 1, execute access for supervisor-mode linear addresses; indicates whether instruction fetches are allowed from supervisor-mode linear addresses in the 2-MByte page controlled by this entry
5:3	EPT memory type for this 2-MByte page (see Section 29.3.7)
6	Ignore PAT memory type for this 2-MByte page (see Section 29.3.7)
7	Must be 1 (otherwise, this entry references an EPT page table)
8	If bit 6 of EPTP is 1, accessed flag for EPT; indicates whether software has accessed the 2-MByte page referenced by this entry (see Section 29.3.5). Ignored if bit 6 of EPTP is 0
9	If bit 6 of EPTP is 1, dirty flag for EPT; indicates whether software has written to the 2-MByte page referenced by this entry (see Section 29.3.5). Ignored if bit 6 of EPTP is 0
10	Execute access for user-mode linear addresses. If the "mode-based execute control for EPT" VM-execution control is 1, indicates whether instruction fetches are allowed from user-mode linear addresses in the 2-MByte page controlled by this entry. If that control is 0, this bit is ignored.
11	Ignored
20:12	Reserved (must be 0)
(N–1):21	Physical address of the 2-MByte page referenced by this entry[1]
51:N	Reserved (must be 0)
56:52	Ignored
57	Verify guest paging. If the "guest-paging verification" VM-execution control is 1, indicates limits on the guest paging structures used to access the 2-MByte page controlled by this entry (see Section 29.3.3.2). If that control is 0, this bit is ignored.
58	Paging-write access. If the "EPT paging-write control" VM-execution control is 1, indicates that guest paging may update the 2-MByte page controlled by this entry (see Section 29.3.3.2). If that control is 0, this bit is ignored.
59	Ignored
60	Supervisor shadow stack. If bit 7 of EPTP is 1, indicates whether supervisor shadow stack accesses are allowed to guest-physical addresses in the 2-MByte page mapped by this entry (see Section 29.3.3.2). Ignored if bit 7 of EPTP is 0
62:61	Ignored
63	Suppress #VE. If the "EPT-violation #VE" VM-execution control is 1, EPT violations caused by accesses to this page are convertible to virtualization exceptions only if this bit is 0 (see Section 26.5.7.1). If "EPT-violation #VE" VM-execution control is 0, this bit is ignored.

NOTES:

1. N is the physical-address width supported by the logical processor.

— Bits 51:12 are from the EPT PDE.

  - Bits 11:3 are bits 20:12 of the guest-physical address.
  - Bits 2:0 are all 0.
- Because an EPT PTE is identified using bits 47:12 of the guest-physical address, every EPT PTE maps a 4-KByte page. The final physical address is computed as follows:
  - Bits 63:52 are all 0.
  - Bits 51:12 are from the EPT PTE.
  - Bits 11:0 are from the original guest-physical address.

  The format of an EPT PTE is given in Table 29-6.

An EPT paging-structure entry is **present** if any of bits 2:0 is 1; otherwise, the entry is **not present**. The processor ignores bits 62:3 and uses the entry neither to reference another EPT paging-structure entry nor to produce a physical address. A reference using a guest-physical address whose translation encounters an EPT paging-structure that is not present causes an EPT violation (see Section 29.3.3.2). (If the "EPT-violation #VE" VM-execution control is 1, the EPT violation is convertible to a virtualization exception only if bit 63 is 0; see Section 26.5.7.1. If the "EPT-violation #VE" VM-execution control is 0, this bit is ignored.)

Table 29-5. Format of an EPT Page-Directory Entry (PDE) that References an EPT Page Table

Bit Position(s)	Contents
0	Read access; indicates whether reads are allowed from the 2-MByte region controlled by this entry
1	Write access; indicates whether writes are allowed to the 2-MByte region controlled by this entry
2	If the "mode-based execute control for EPT" VM-execution control is 0, execute access; indicates whether instruction fetches are allowed from the 2-MByte region controlled by this entry If that control is 1, execute access for supervisor-mode linear addresses; indicates whether instruction fetches are allowed from supervisor-mode linear addresses in the 2-MByte region controlled by this entry
6:3	Reserved (must be 0)
7	Must be 0 (otherwise, this entry maps a 2-MByte page)
8	If bit 6 of EPTP is 1, accessed flag for EPT; indicates whether software has accessed the 2-MByte region controlled by this entry (see Section 29.3.5). Ignored if bit 6 of EPTP is 0
9	Ignored
10	Execute access for user-mode linear addresses. If the "mode-based execute control for EPT" VM-execution control is 1, indicates whether instruction fetches are allowed from user-mode linear addresses in the 2-MByte region controlled by this entry. If that control is 0, this bit is ignored.
11	Ignored
(N–1):12	Physical address of 4-KByte aligned EPT page table referenced by this entry[1]
51:N	Reserved (must be 0)
63:52	Ignored

NOTES:

1. N is the physical-address width supported by the logical processor.

NOTE

If the "mode-based execute control for EPT" VM-execution control is 1, an EPT paging-structure entry is present if any of bits 2:0 **or bit 10** is 1. If bits 2:0 are all 0 but bit 10 is 1, the entry is used normally to reference another EPT paging-structure entry or to produce a physical address.

The discussion above describes how the EPT paging structures reference each other and how the logical processor traverses those structures when translating a guest-physical address. It does not cover all details of the translation process. Additional details are provided as follows:

- Situations in which the translation process may lead to VM exits (sometimes before the process completes) are described in Section 29.3.3.
- Interactions between the EPT translation mechanism and memory typing are described in Section 29.3.7.

Figure 29-1 gives a summary of the formats of the EPTP and the EPT paging-structure entries. For the EPT paging structure entries, it identifies separately the format of entries that map pages, those that reference other EPT paging structures, and those that do neither because they are not present; bits 2:0 and bit 7 are highlighted because they determine how a paging-structure entry is used. (Figure 29-1 does not comprehend the fact that, if the "mode-based execute control for EPT" VM-execution control is 1, an entry is present if any of bits 2:0 or bit 10 is 1.)

29.3.3 EPT-Induced VM Exits

Accesses using guest-physical addresses may cause VM exits due to EPT misconfigurations, EPT violations, and page-modification log-full events. An **EPT misconfiguration** occurs when, in the course of translating a guest-physical address, the logical processor encounters an EPT paging-structure entry that contains an unsupported value (see Section 29.3.3.1). An **EPT violation** occurs when there is no EPT misconfiguration but the EPT paging-structure entries disallow an access using the guest-physical address (see Section 29.3.3.2). A **page-modification log-full event** occurs when the logical processor determines a need to create a page-modification log entry and the current log is full (see Section 29.3.6).

These events occur only due to an attempt to access memory with a guest-physical address. Loading CR3 with a guest-physical address with the MOV to CR3 instruction can cause neither an EPT configuration nor an EPT violation until that address is used to access a paging structure.[1]

If the "EPT-violation #VE" VM-execution control is 1, certain EPT violations may cause virtualization exceptions instead of VM exits. See Section 26.5.7.1.

29.3.3.1 EPT Misconfigurations

An EPT misconfiguration occurs if translation of a guest-physical address encounters an EPT paging-structure entry that meets any of the following conditions:

- Bit 0 of the entry is clear (indicating that data reads are not allowed) and any of the following hold:
  - Bit 1 is set (indicating that data writes are allowed).
  - The processor does not support execute-only translations and either of the following hold:
    - Bit 2 is set (indicating that instruction fetches are allowed).[2]
    - The "mode-based execute control for EPT" VM-execution control is 1 and bit 10 is set (indicating that instruction fetches are allowed from user-mode linear addresses).

    Software should read the VMX capability MSR IA32_VMX_EPT_VPID_CAP to determine whether execute-only translations are supported (see Appendix A.10).
  - The "EPT paging-write control" VM-execution control is 1, the entry maps a page, and bit 58 is set (indicating that paging writes are allowed).
- The entry is present (see Section 29.3.2) and of the following holds:

1. If the logical processor is using PAE paging—because CR0.PG = CR4.PAE = 1 and IA32_EFER.LMA = 0—the MOV to CR3 instruction loads the PDPTEs from memory using the guest-physical address being loaded into CR3. In this case, therefore, the MOV to CR3 instruction may cause an EPT misconfiguration, an EPT violation, or a page-modification log-full event.
2. If the "mode-based execute control for EPT" VM-execution control is 1, setting bit 2 indicates that instruction fetches are allowed from supervisor-mode linear addresses.

Table 29-6. Format of an EPT Page-Table Entry that Maps a 4-KByte Page

Bit Position(s)	Contents
0	Read access; indicates whether reads are allowed from the 4-KByte page referenced by this entry
1	Write access; indicates whether writes are allowed to the 4-KByte page referenced by this entry
2	If the "mode-based execute control for EPT" VM-execution control is 0, execute access; indicates whether instruction fetches are allowed from the 4-KByte page controlled by this entry If that control is 1, execute access for supervisor-mode linear addresses; indicates whether instruction fetches are allowed from supervisor-mode linear addresses in the 4-KByte page controlled by this entry
5:3	EPT memory type for this 4-KByte page (see Section 29.3.7)
6	Ignore PAT memory type for this 4-KByte page (see Section 29.3.7)
7	Ignored
8	If bit 6 of EPTP is 1, accessed flag for EPT; indicates whether software has accessed the 4-KByte page referenced by this entry (see Section 29.3.5). Ignored if bit 6 of EPTP is 0
9	If bit 6 of EPTP is 1, dirty flag for EPT; indicates whether software has written to the 4-KByte page referenced by this entry (see Section 29.3.5). Ignored if bit 6 of EPTP is 0
10	Execute access for user-mode linear addresses. If the "mode-based execute control for EPT" VM-execution control is 1, indicates whether instruction fetches are allowed from user-mode linear addresses in the 4-KByte page controlled by this entry. If that control is 0, this bit is ignored.
11	Ignored
(N–1):12	Physical address of the 4-KByte page referenced by this entry[1]
51:N	Reserved (must be 0)
56:52	Ignored
57	Verify guest paging. If the "guest-paging verification" VM-execution control is 1, indicates limits on the guest paging structures used to access the 4-KByte page controlled by this entry (see Section 29.3.3.2). If that control is 0, this bit is ignored.
58	Paging-write access. If the "EPT paging-write control" VM-execution control is 1, indicates that guest paging may update the 4-KByte page controlled by this entry (see Section 29.3.3.2). If that control is 0, this bit is ignored.
59	Ignored
60	Supervisor shadow stack. If bit 7 of EPTP is 1, indicates whether supervisor shadow stack accesses are allowed to guest-physical addresses in the 4-KByte page mapped by this entry (see Section 29.3.3.2). Ignored if bit 7 of EPTP is 0
61	Sub-page write permissions. If the "sub-page write permissions for EPT" VM-execution control is 1, writes to individual 128-byte regions of the 4-KByte page referenced by this entry may be allowed even if the page would normally not be writable (see Section 29.3.4). If "sub-page write permissions for EPT" VM-execution control is 0, this bit is ignored.
62	Ignored
63	Suppress #VE. If the "EPT-violation #VE" VM-execution control is 1, EPT violations caused by accesses to this page are convertible to virtualization exceptions only if this bit is 0 (see Section 26.5.7.1). If "EPT-violation #VE" VM-execution control is 0, this bit is ignored.

NOTES:

1. N is the physical-address width supported by the logical processor.

— A reserved bit is set. This includes the setting of a bit in the range 51:12 that is beyond the logical processor's physical-address width.[1] See Section 29.3.2 for details of which bits are reserved in which EPT paging-structure entries.

— The entry is the last one used to translate a guest physical address (either an EPT PDE with bit 7 set to 1 or an EPT PTE) and the value of bits 5:3 (EPT memory type) is 2, 3, or 7 (these values are reserved).

EPT misconfigurations result when an EPT paging-structure entry is configured with settings reserved for future functionality. Software developers should be aware that such settings may be used in the future and that an EPT paging-structure entry that causes an EPT misconfiguration on one processor might not do so in the future.

29.3.3.2 EPT Violations

An EPT violation may occur during an access using a guest-physical address whose translation does not cause an EPT misconfiguration. An EPT violation occurs in any of the following situations:

- Translation of the guest-physical address encounters an EPT paging-structure entry that is not present (see Section 29.3.2).

1. Software can determine a processor's physical-address width by executing CPUID with 80000008H in EAX. The physical-address width is returned in bits 7:0 of EAX.

- The access is a data read and, for any byte to be read, bit 0 (read access) was clear in any of the EPT paging-structure entries used to translate the guest-physical address of the byte. Reads by the logical processor of guest paging structures to translate a linear address are considered to be data reads.

63	62	61	60	59	58	57	56	55	54	53	52	51		M[1]	M-1			32	31	30	29	28	27	26	25	24	23	22	21	20	19	18	17	16	15	14	13	12	11	10	9	8	7	6	5	4	3	2	1	0	
Reserved															Address of EPT PML4 table																								Rsvd.				SSS[2]	A/D	EPT PWL-1			EPT PS MT			**EPTP[3]**
Ignored													Rsvd.		Address of EPT page-directory-pointer table																								Ign.	XU[4]	Ign.	A	Reserved					X[5]	W	R	**PML4E: present[6]**
SVE[7]	Ignored																																																		**PML4E: not present**
SVE	Ign.		SSS[8]	Ign.	PW[9]	VGP[10]	Ignored						Rsvd.		Physical address of 1GB page																								Ign.	XU	D	A	1	IPAT	EPT MT			X	W	R	**PDPTE: 1GB page**
Ignored													Rsvd.		Address of EPT page directory																								Ign.	XU	Ign.	A	0	Rsvd.				X	W	R	**PDPTE: page directory**
SVE	Ignored																																																		**PDTPE: not present**
SVE	Ign.		SSS	Ign.	PW	VGP	Ignored						Rsvd.		Physical address of 2MB page																								Ign.	XU	D	A	1	IPAT	EPT MT			X	W	R	**PDE: 2MB page**
Ignored													Rsvd.		Address of EPT page table																								Ign.	XU	Ign.	A	0	Rsvd.				X	W	R	**PDE: page table**
SVE	Ignored																																																		**PDE: not present**
SVE	Ign.	SPP[11]	SSS	Ign.	PW	VGP	Ignored						Rsvd.		Physical address of 4KB page																								Ign.	XU	D	A	Ign	IPAT	EPT MT			X	W	R	**PTE: 4KB page**
SVE	Ignored																																																		**PTE: not present**

Figure 29-1. Formats of EPTP and EPT Paging-Structure Entries

NOTES:

1. M is an abbreviation for MAXPHYADDR.
2. Supervisor shadow-stack control.
3. See Section 25.6.11 for details of the EPTP.
4. Execute access for user-mode linear addresses. If the "mode-based execute control for EPT" VM-execution control is 0, this bit is ignored.
5. Execute access. If the "mode-based execute control for EPT" VM-execution control is 1, this bit controls execute access for supervisor-mode linear addresses.
6. If the "mode-based execute control for EPT" VM-execution control is 1, an EPT paging-structure entry is present if any of bits 2:0 or bit 10 is 1. This table does not comprehend that fact.
7. Suppress #VE. If the "EPT-violation #VE" VM-execution control is 0, this bit is ignored.
8. Supervisor shadow-stack page. If bit 7 of the EPTP is 0, this bit is ignored.

9. Paging-write access. If the "EPT paging-write control" VM-execution control is 0, this bit is ignored.
10. Verify guest paging. If the "guest-paging verification" VM-execution control is 0, this bit is ignored.
11. Sub-page write permissions. If the "sub-page write permissions for EPT" VM-execution control is 0, this bit is ignored.

- The access is a data write and, for any byte to be written, bit 1 (write access) was clear in any of the EPT paging-structure entries used to translate the guest-physical address of the byte. Writes by the logical processor to guest paging structures to update accessed and dirty flags are considered to be data writes.

  If bit 6 of the EPT pointer (EPTP) is 1 (enabling accessed and dirty flags for EPT), processor accesses to guest paging-structure entries are treated as writes with regard to EPT violations. Thus, if bit 1 is clear in any of the EPT paging-structure entries used to translate the guest-physical address of a guest paging-structure entry, an attempt to use that entry to translate a linear address causes an EPT violation.

  (This does not apply to loads of the PDPTE registers by the MOV to CR instruction for PAE paging; see Section 4.4.1. Those loads of guest PDPTEs are treated as reads and do not cause EPT violations due to a guest-physical address not being writable.)

  Processor writes to guest paging structures to update accessed and dirty flags are called **paging writes**. (When accessed and dirty flags for EPT are enabled all processor accesses to guest paging structures are considered paging writes.) If the "EPT paging-write control" VM-execution control is 1, clearing the write-access bit in the EPT paging-structure entry that maps a page does not prevent a paging write if bit 58 (paging-write access) in that entry is 1. (EPT paging-structure entries that reference other EPT paging structures do not use bit 58, and it remains the case that they must set the write-access bit for paging writes to be allowed.)

  If the "sub-page write permissions for EPT" VM-execution control is 1, data writes to a guest-physical address that would cause an EPT violation (as indicated above) do not do so in certain situations. If the guest-physical address is mapped using a 4-KByte page and bit 61 (sub-page write permissions) of the EPT PTE used to map the page is 1, writes to certain 128-byte sub-pages may be allowed. See Section 29.3.4 for details.
- The access is an instruction fetch and the EPT paging structures prevent execute access to any of the bytes being fetched. Whether this occurs depends upon the setting of the "mode-based execute control for EPT" VM-execution control:
  - If the control is 0, an instruction fetch from a byte is prevented if bit 2 (execute access) was clear in any of the EPT paging-structure entries used to translate the guest-physical address of the byte.
  - If the control is 1, an instruction fetch from a byte is prevented in either of the following cases:
    - Paging maps the linear address of the byte as a supervisor-mode address and bit 2 (execute access for supervisor-mode linear addresses) was clear in any of the EPT paging-structure entries used to translate the guest-physical address of the byte.

      Paging maps a linear address as a supervisor-mode address if the U/S flag (bit 2) is 0 in at least one of the paging-structure entries controlling the translation of the linear address.
    - Paging maps the linear address of the byte as a user-mode address and bit 10 (execute access for user-mode linear addresses) was clear in any of the EPT paging-structure entries used to translate the guest-physical address of the byte.

      Paging maps a linear address as a user-mode address if the U/S flag is 1 in all of the paging-structure entries controlling the translation of the linear address. If paging is disabled (CR0.PG = 0), every linear address is a user-mode address.
- If supervisor shadow-stack control is enabled (by setting bit 7 of EPTP), the access is a supervisor shadow-stack access, and the EPT paging-structure entries used to translate the guest-physical address of the access disallow supervisor shadow-stack accesses. Such an access is disallowed if any of the following hold:
  - Bit 0 (read access) is clear in any EPT paging-structure entry used to translate the guest-physical address of the access.
  - Bit 1 (write access) is clear in any EPT paging-structure entry that references an EPT paging structure in the translation of the guest-physical address. (Clearing bit 1 in the EPT paging-structure entry that maps the page of the guest-physical address does not disallow shadow-stack reads and writes.)
  - Bit 60 (supervisor-shadow stack access) is clear in the EPT paging-structure entry that maps the page of the guest-physical address.

Supervisor shadow-stack control and the supervisor-shadow stack access bits in EPT paging-structure entries do not affect other accesses (including user shadow-stack accesses).

- If the "guest-paging verification" and "EPT paging-write control" VM-execution controls are both 1, **guest-paging verification** is performed for certain accesses related to translation of a linear address.

  Specifically, guest-paging verification may apply to an access using a guest-physical address to the guest paging-structure entry that maps a page for the linear address (see Chapter 4, "Paging"). It applies if bit 57 (verify guest paging) is set in the EPT paging-structure entry that maps a page for that guest-physical address.

  When guest-paging verification occurs, there is an EPT violation if bit 58 (paging-write access) is clear in the EPT paging-structure entry that was used to map a page for the guest-physical address of any guest paging-structure entry that was used during translation of the original linear address.[1]

  See Section 29.3.3.3 for details regarding the prioritization of such EPT violations relative to any page faults that may occur due to the original reference to the linear address being translated.

29.3.3.3 Prioritization of EPT Misconfigurations and EPT Violations

The translation of a linear address to a physical address requires one or more translations of guest-physical addresses using EPT (see Section 29.3.1). This section specifies the relative priority of EPT-induced VM exits with respect to each other and to other events that may be encountered when accessing memory using a linear address.

For an access to a guest-physical address, determination of whether an EPT misconfiguration or an EPT violation occurs is based on an iterative process:[2]

1. An EPT paging-structure entry is read (initially, this is an EPT PML4 entry):
   a. If the entry is not present (see Section 29.3.2), an EPT violation occurs.
   b. If the entry is present but its contents are not configured properly (see Section 29.3.3.1), an EPT misconfiguration occurs.
   c. If the entry is present and its contents are configured properly, operation depends on whether the entry references another EPT paging structure (whether it is an EPT PDE with bit 7 set to 1 or an EPT PTE):
      i) If the entry does reference another EPT paging structure, an entry from that structure is accessed; step 1 is executed for that other entry.
      ii) Otherwise, the entry is used to produce the ultimate physical address (the translation of the original guest-physical address); step 2 is executed.
2. Once the ultimate physical address is determined, the privileges determined by the EPT paging-structure entries are evaluated:
   a. If the access to the guest-physical address is not allowed by these privileges (see Section 29.3.3.2), an EPT violation occurs.
   b. If the access to the guest-physical address is allowed by these privileges, memory is accessed using the ultimate physical address.

If CR0.PG = 1, the translation of a linear address is also an iterative process, with the processor first accessing an entry in the guest paging structure referenced by the guest-physical address in CR3,[3] then accessing an entry in another guest paging structure referenced by the guest-physical address in the first guest paging-structure entry, etc. Each guest-physical address is itself translated using EPT and may cause an EPT-induced VM exit. The following items detail how page faults and EPT-induced VM exits are recognized during this iterative process:

1. An attempt is made to access a guest paging-structure entry with a guest-physical address (initially, the address in CR3.

---

1. When there is a restart of HLAT paging (see Section 4.5), the guest paging-structure entries used by HLAT paging (prior to the restart) are not relevant to guest-paging verification.
2. This is a simplification of the more detailed description given in Section 29.3.2.
3. If PAE paging is in use, the processor instead uses the guest-physical address in the appropriate PDPTE register. If HLAT paging is enabled, the processor instead uses the HLATP VMCS field. For simplicity, the remainder of this section refers only to CR3.

a. If the access fails because of an EPT misconfiguration or an EPT violation (see above), an EPT-induced VM exit occurs.

b. If the access does not cause an EPT-induced VM exit, the translation continues. If guest-paging verification is enabled (see Section 29.3.3.2), the processor notes whether the EPT paging-structure entry used to map a page for the guest-physical address set bit 58 (paging write). Then, bit 0 (the present flag) of the guest paging-structure entry is consulted:

   i) If the present flag is 0 or any reserved bit is set, a page fault occurs.

   ii) If the present flag is 1, no reserved bit is set, operation depends on whether the entry references another guest paging structure (whether it is a guest PDE with PS = 1 or a guest PTE):

   - If the entry does reference another guest paging structure, an entry from that structure is accessed; step 1 is executed for that other entry.
   - Otherwise, the entry is used to produce the ultimate guest-physical address (the translation of the original linear address); step 2 is executed.

2. Once the ultimate guest-physical address is determined, the privileges determined by the guest paging-structure entries are evaluated:

   a. If the access to the linear address is not allowed by these privileges (e.g., it was a write to a read-only page), a page fault occurs.

   b. If the access to the linear address is allowed by these privileges, an attempt is made to access memory at the ultimate guest-physical address:

      i) If the access fails because of an EPT misconfiguration or an EPT violation (see above), an EPT-induced VM exit occurs. It is at this point that guest-paging verification occurs (if enabled), using the paging-write bits that were noted at occurrences of step 1b above (see Section 29.3.3.2 for details of guest-paging verification).

      ii) If the access does not cause an EPT-induced VM exit, memory is accessed using the ultimate physical address (the translation, using EPT, of the ultimate guest-physical address).

If CR0.PG = 0, a linear address is treated as a guest-physical address and is translated using EPT (see above). This process, if it completes without an EPT violation or EPT misconfiguration, produces a physical address and determines the privileges allowed by the EPT paging-structure entries. If these privileges do not allow the access to the physical address (see Section 29.3.3.2), an EPT violation occurs. Otherwise, memory is accessed using the physical address.

29.3.4 Sub-Page Write Permissions

Section 29.3.3.2 explained how EPT enforces the access rights for guest-physical addresses using EPT violations. Since these access rights are determined using the EPT paging-structure entries that are used to translate a guest-physical address, their granularity is limited to that which is used to map pages (1-GByte, 2-MByte, or 4-KByte).

The **sub-page write-permission** feature allows the control of write accesses to guest-physical addresses to be controlled at finer granularity. Sub-page write permissions allow write accesses to be controlled at the granularity of naturally aligned 128-byte **sub-pages**. Specifically, the feature allows writes to selected sub-pages of 4-KByte page that would otherwise not be writable.

Sub-page write permissions are enabled setting the "sub-page write permissions for EPT" VM-execution control to 1. The remainder of this section describes changes to processor operation with this control setting.

Section 29.3.4.1 identifies the data accesses that are eligible for sub-page write permissions. Section 29.3.4.2 explains how the processor determines whether to allow such an access.

29.3.4.1 Write Accesses That Are Eligible for Sub-Page Write Permissions

A guest-physical address is eligible for sub-page write permissions if writes to it would be disallowed following Section 29.3.3.2: bit 1 (write access) is clear in any of the EPT paging-structure entries used to translate the guest-

physical address. Guest-physical addresses to which writes would be disallowed for other reasons (e.g., the translation encounters an EPT paging-structure entry that is not present) are not eligible for sub-page write permissions.

In addition, a guest-physical address is eligible for sub-page write permissions only if it is mapped using a 4-KByte page and bit 61 (sub-page write permissions) of the EPT PTE used to map the page is 1. (Guest-physical addresses mapped with larger pages are not eligible for sub-page write permissions.)

For some memory accesses, the processor ignores bit 61 in an EPT PTE used to map a 4-KByte page and does not apply sub-page write permissions to the access. (In such a case, the access causes an EPT violation when indicated by the conditions given in Section 29.3.3.2.) Sub-page write permissions never apply to the following accesses:

- A write access performed within a transactional region.
- A write access by an enclave to an address within the enclave's ELRANGE. (Sub-page write permissions may apply to write accesses by an enclaves to addresses outside its ELRANGE.)
- A write access to the enclave page cache (EPC) by an Intel SGX instruction.
- A write access to a guest paging structure to update an accessed or dirty flag.
- Processor accesses to guest paging-structure entries when accessed and dirty flags for EPT are enabled (such accesses are treated as writes with regard to EPT violations).

There are additional accesses to which sub-page write permissions might not be applied (behavior is model-specific). The following items enumerate examples:

- A write access that crosses two 4-KByte pages. In this case, sub-page permissions may be applied to neither or to only one of the pages. (There is no write to either page unless the write is allowed to both pages.)
- A write access by an instruction that performs multiple write accesses (sub-page write permissions are intended principally for basic instructions such as AND, MOV, OR, TEST, XCHG, and XOR).

If a guest-physical address is eligible for sub-page write permissions, the processor determines whether to allow write to the address using the process described in Section 29.3.4.2.

If a guest-physical address is eligible for sub-page write permissions and that address translates to an address on the APIC-access page (see Section 30.4), the processor may treat a write access to the address as if the "virtualize APIC accesses" VM-execution control were 0. For that reason, it is recommended that software not configure any guest-physical address that translates to an address on the APIC-access page to be eligible for sub-page write permissions.

29.3.4.2 Determining an Access's Sub-Page Write Permission

Sub-page write permissions control write accesses individually to each of the 32 128-byte sub-pages of a 4-KByte page. Bits 11:7 of guest-physical address identify the sub-page.

For each guest-physical address eligible for sub-page write permissions, there is a 64-bit **sub-page permission vector** (**SPP vector**). All addresses on a 4-KByte page use the same SPP vector. If an address's sub-page number (bits 11:7 of the address) is S, writes to address are allowed if and only if bit 2S of the sub-page permission is set to 1. (The bits at odd positions in a SPP vector are not used and must be zero.)

Each page's SPP vector is located in memory. For a write to a guest-physical address eligible for sub-page write permissions, the processor uses the following process to locate the address's SPP vector:

1. The SPPTP (sub-page-permission-table pointer) VM-execution control field contains the physical address of the 4-KByte root SPP table (SSPL4 table). Bits 47:39 of the guest-physical address identify a 64-bit entry in that table, called an SPPL4E.
2. A 4-KByte SPPL3 table is located at the physical address in the selected SPPL4E. Bits 38:30 of the guest-physical address identify a 64-bit entry in that table, called an SPPL3E.
3. A 4-KByte SPPL2 table is located at the physical address in the selected SPPL3E. Bits 29:21 of the guest-physical address identify a 64-bit entry in that table, called an SPPL2E.
4. A 4-KByte SPP-vector table (SSPL1 table) is located at the physical address in the selected SPPL2E. Bits 20:12 of the guest-physical address identify the 64-bit SPP vector for the address. As noted earlier, bit 2S of the sub-page permission vector determines whether the address may be written, where S is the value of address bits 11:7.

(The memory type used to access these tables is reported in bits 53:50 of the IA32_VMX_BASIC MSR. See Appendix A.1.)

A write access to multiple 128-byte sub-pages on a single 4-KByte page is allowed only if the indicated bit in the page's SPP vector for each of those sub-pages is set to 1. The following items apply to cases in which an access writes to two 4-KByte pages:

- If a write to either page would be disallowed according to Section 28.2.3.2, the access might be disallowed even if the guest-physical address of that page is eligible for sub-page write permissions. (This behavior is model-specific.)
- The access is allowed only if, for each page, either (1) a write to the page would be allowed following Section 28.2.3.2; or (2) both (a) the guest-physical address of that page is eligible for sub-page write permissions; and (b) the page's sub-page vector allows the write (as described above).

Bit 0 of each entry (SPPL4E, SPPL3E, or SPPL2E) is the entry's **valid** bit. If the process above accesses an entry in which this bit is 0, the process stops and the logical processor incurs an **SPP miss**.

In each entry (SPPL4E, SPPL4E, or SPPL2E), bits 11:1 are reserved, as are bits 63:N, where N is the processor's physical-address width. If the process above accesses an entry in which the valid bit is 1 and in which some reserved bit is set, the process stops and the logical processor incurs an **SPP misconfiguration**. Bits in an SPP vector in odd positions are also reserved; an SPP misconfiguration occurs also any of those bits are set in the final SPP vector.

SPP misses and SPP misconfigurations are called **SPP-related events** and cause VM exits.

29.3.5 Accessed and Dirty Flags for EPT

The Intel 64 architecture supports **accessed and dirty flags** in ordinary paging-structure entries (see Section 4.8). Some processors also support corresponding flags in EPT paging-structure entries. Software should read the VMX capability MSR IA32_VMX_EPT_VPID_CAP (see Appendix A.10) to determine whether the processor supports this feature.

Software can enable accessed and dirty flags for EPT using bit 6 of the extended-page-table pointer (EPTP), a VM-execution control field (see Table 25-9 in Section 25.6.11). If this bit is 1, the processor will set the accessed and dirty flags for EPT as described below. In addition, setting this flag causes processor accesses to guest paging-structure entries to be treated as writes (see below and Section 29.3.3.2).

For any EPT paging-structure entry that is used during guest-physical-address translation, bit 8 is the accessed flag. For a EPT paging-structure entry that maps a page (as opposed to referencing another EPT paging structure), bit 9 is the dirty flag.

Whenever the processor uses an EPT paging-structure entry as part of guest-physical-address translation, it sets the accessed flag in that entry (if it is not already set).

Whenever there is a write to a guest-physical address, the processor sets the dirty flag (if it is not already set) in the EPT paging-structure entry that identifies the final physical address for the guest-physical address (either an EPT PTE or an EPT paging-structure entry in which bit 7 is 1).

When accessed and dirty flags for EPT are enabled, processor accesses to guest paging-structure entries are treated as writes (see Section 29.3.3.2). Thus, such an access will cause the processor to set the dirty flag in the EPT paging-structure entry that identifies the final physical address of the guest paging-structure entry.

(This does not apply to loads of the PDPTE registers for PAE paging by the MOV to CR instruction; see Section 4.4.1. Those loads of guest PDPTEs are treated as reads and do not cause the processor to set the dirty flag in any EPT paging-structure entry.)

These flags are "sticky," meaning that, once set, the processor does not clear them; only software can clear them.

A processor may cache information from the EPT paging-structure entries in TLBs and paging-structure caches (see Section 29.4). This fact implies that, if software changes an accessed flag or a dirty flag from 1 to 0, the processor might not set the corresponding bit in memory on a subsequent access using an affected guest-physical address.

29.3.6 Page-Modification Logging

When accessed and dirty flags for EPT are enabled, software can track writes to guest-physical addresses using a feature called **page-modification logging**.

Software can enable page-modification logging by setting the "enable PML" VM-execution control (see Table 25-7 in Section 25.6.2). When this control is 1, the processor adds entries to the **page-modification log** as described below. The page-modification log is a 4-KByte region of memory located at the physical address in the PML address VM-execution control field. The page-modification log consists of 512 64-bit entries; the PML index VM-execution control field indicates the next entry to use.

Before allowing a guest-physical access, the processor may determine that it first needs to set an accessed or dirty flag for EPT (see Section 29.3.5). When this happens, the processor examines the PML index. If the PML index is not in the range 0–511, there is a **page-modification log-full event** and a VM exit occurs. In this case, the accessed or dirty flag is not set, and the guest-physical access that triggered the event does not occur.

If instead the PML index is in the range 0–511, the processor proceeds to update accessed or dirty flags for EPT as described in Section 29.3.5. If the processor updated a dirty flag for EPT (changing it from 0 to 1), it then operates as follows:

1. The guest-physical address of the access is written to the page-modification log. Specifically, the guest-physical address is written to physical address determined by adding 8 times the PML index to the PML address. Bits 11:0 of the value written are always 0 (the guest-physical address written is thus 4-KByte aligned).
2. The PML index is decremented by 1 (this may cause the value to transition from 0 to FFFFH).

Because the processor decrements the PML index with each log entry, the value may transition from 0 to FFFFH. At that point, no further logging will occur, as the processor will determine that the PML index is not in the range 0–511 and will generate a page-modification log-full event (see above).

29.3.7 EPT and Memory Typing

This section specifies how a logical processor determines the memory type use for a memory access while EPT is in use. (See Chapter 12, "Memory Cache Control" of *Intel® 64 and IA-32 Architectures Software Developer's Manual, Volume 3A* for details of memory typing in the Intel 64 architecture.) Section 29.3.7.1 explains how the memory type is determined for accesses to the EPT paging structures. Section 29.3.7.2 explains how the memory type is determined for an access using a guest-physical address that is translated using EPT.

29.3.7.1 Memory Type Used for Accessing EPT Paging Structures

This section explains how the memory type is determined for accesses to the EPT paging structures. The determination is based first on the value of bit 30 (cache disable—CD) in control register CR0:

- If CR0.CD = 0, the memory type used for any such reference is the EPT paging-structure memory type, which is specified in bits 2:0 of the extended-page-table pointer (EPTP), a VM-execution control field (see Section 25.6.11). A value of 0 indicates the uncacheable type (UC), while a value of 6 indicates the write-back type (WB). Other values are reserved.
- If CR0.CD = 1, the memory type used for any such reference is uncacheable (UC).

The MTRRs have no effect on the memory type used for an access to an EPT paging structure.

29.3.7.2 Memory Type Used for Translated Guest-Physical Addresses

The **effective memory type** of a memory access using a guest-physical address (an access that is translated using EPT) is the memory type that is used to access memory. The effective memory type is based on the value of bit 30 (cache disable—CD) in control register CR0; the **last** EPT paging-structure entry used to translate the guest-physical address (either an EPT PDE with bit 7 set to 1 or an EPT PTE); and the PAT memory type (see below):

- The **PAT memory type** depends on the value of CR0.PG:
  - If CR0.PG = 0, the PAT memory type is WB (writeback).[1]

  - If CR0.PG = 1, the PAT memory type is the memory type selected from the IA32_PAT MSR as specified in Section 12.12.3, "Selecting a Memory Type from the PAT".[1]
- The **EPT memory type** is specified in bits 5:3 of the last EPT paging-structure entry: 0 = UC; 1 = WC; 4 = WT; 5 = WP; and 6 = WB. Other values are reserved and cause EPT misconfigurations (see Section 29.3.3).
- If CR0.CD = 0, the effective memory type depends upon the value of bit 6 of the last EPT paging-structure entry:
  - If the value is 0, the effective memory type is the combination of the EPT memory type and the PAT memory type specified in Table 12-7 in Section 12.5.2.2, using the EPT memory type in place of the MTRR memory type.
  - If the value is 1, the memory type used for the access is the EPT memory type. The PAT memory type is ignored.
- If CR0.CD = 1, the effective memory type is UC.

The MTRRs have no effect on the memory type used for an access to a guest-physical address.

29.4 CACHING TRANSLATION INFORMATION

Processors supporting Intel® 64 and IA-32 architectures may accelerate the address-translation process by caching on the processor data from the structures in memory that control that process. Such caching is discussed in Section 4.10, "Caching Translation Information" in the *Intel® 64 and IA-32 Architectures Software Developer's Manual, Volume 3A.* The current section describes how this caching interacts with the VMX architecture.

The VPID and EPT features of the architecture for VMX operation augment this caching architecture. EPT defines the guest-physical address space and defines translations to that address space (from the linear-address space) and from that address space (to the physical-address space). Both features control the ways in which a logical processor may create and use information cached from the paging structures.

Section 29.4.1 describes the different kinds of information that may be cached. Section 29.4.2 specifies when such information may be cached and how it may be used. Section 29.4.3 details how software can invalidate cached information.

29.4.1 Information That May Be Cached

Section 4.10, "Caching Translation Information" in *Intel® 64 and IA-32 Architectures Software Developer's Manual, Volume 3A* identifies two kinds of translation-related information that may be cached by a logical processor: **translations**, which are mappings from linear page numbers to physical page frames, and **paging-structure caches**, which map the upper bits of a linear page number to information from the paging-structure entries used to translate linear addresses matching those upper bits.

The same kinds of information may be cached when VPIDs and EPT are in use. A logical processor may cache and use such information based on its function. Information with different functionality is identified as follows:

- **Linear mappings**.[2] There are two kinds:
  - Linear translations. Each of these is a mapping from a linear page number to the physical page frame to which it translates, along with information about access privileges and memory typing.

---

1. If the capability MSR IA32_VMX_CR0_FIXED0 reports that CR0.PG must be 1 in VMX operation, CR0.PG can be 0 in VMX non-root operation only if the "unrestricted guest" VM-execution control and bit 31 of the primary processor-based VM-execution controls are both 1.

1. Table 12-11 in Section 12.12.3, "Selecting a Memory Type from the PAT" illustrates how the PAT memory type is selected based on the values of the PAT, PCD, and PWT bits in a page-table entry (or page-directory entry with PS = 1). For accesses to a guest paging-structure entry X, the PAT memory type is selected from the table by using a value of 0 for the PAT bit with the values of PCD and PWT from the paging-structure entry Y that references X (or from CR3 if X is in the root paging structure). With PAE paging, the PAT memory type for accesses to the PDPTEs is WB.

2. Earlier versions of this manual used the term "VPID-tagged" to identify linear mappings.

— Linear paging-structure-cache entries. Each of these is a mapping from the upper portion of a linear address to the physical address of the paging structure used to translate the corresponding region of the linear-address space, along with information about access privileges. For example, bits 47:39 of a linear address would map to the address of the relevant page-directory-pointer table.

Linear mappings do not contain information from any EPT paging structure.

- **Guest-physical mappings**.[1] There are two kinds:
  - — Guest-physical translations. Each of these is a mapping from a guest-physical page number to the physical page frame to which it translates, along with information about access privileges and memory typing.
  - — Guest-physical paging-structure-cache entries. Each of these is a mapping from the upper portion of a guest-physical address to the physical address of the EPT paging structure used to translate the corresponding region of the guest-physical address space, along with information about access privileges.

  The information in guest-physical mappings about access privileges and memory typing is derived from EPT paging structures.
- **Combined mappings**.[2] There are two kinds:
  - — Combined translations. Each of these is a mapping from a linear page number to the physical page frame to which it translates, along with information about access privileges and memory typing.
  - — Combined paging-structure-cache entries. Each of these is a mapping from the upper portion of a linear address to the physical address of the paging structure used to translate the corresponding region of the linear-address space, along with information about access privileges.

  The information in combined mappings about access privileges and memory typing is derived from both guest paging structures and EPT paging structures.

Guest-physical mappings and combined mappings may also include SPP vectors and information about the data structures used to locate SPP vectors (see Section 29.3.4.2).

29.4.2 Creating and Using Cached Translation Information

The following items detail the creation of the mappings described in the previous section:[3]

- The following items describe the creation of mappings while EPT is not in use (including execution outside VMX non-root operation):
  - — Linear mappings may be created. They are derived from the paging structures referenced (directly or indirectly) by the current value of CR3 and are associated with the current VPID and the current PCID.
  - — No linear mappings are created with information derived from paging-structure entries that are not present (bit 0 is 0) or that set reserved bits. For example, if a PTE is not present, no linear mapping are created for any linear page number whose translation would use that PTE.
  - — No guest-physical or combined mappings are created while EPT is not in use.
- The following items describe the creation of mappings while EPT is in use:
  - — Guest-physical mappings may be created. They are derived from the EPT paging structures referenced (directly or indirectly) by bits 51:12 of the current EPTP. These 40 bits contain the address of the EPT-PML4-table. (the notation **EP4TA** refers to those 40 bits). Newly created guest-physical mappings are associated with the current EP4TA.
  - — Combined mappings may be created. They are derived from the EPT paging structures referenced (directly or indirectly) by the current EP4TA. If CR0.PG = 1, they are also derived from the paging structures referenced (directly or indirectly) by the current value of CR3. They are associated with the current VPID,

1. Earlier versions of this manual used the term "EPTP-tagged" to identify guest-physical mappings.
2. Earlier versions of this manual used the term "dual-tagged" to identify combined mappings.
3. This section associated cached information with the current VPID and PCID. If PCIDs are not supported or are not being used (e.g., because CR4.PCIDE = 0), all the information is implicitly associated with PCID 000H; see Section 4.10.1, "Process-Context Identifiers (PCIDs)," in *Intel® 64 and IA-32 Architectures Software Developer's Manual, Volume 3A*.

the current PCID, and the current EP4TA.[1] No combined paging-structure-cache entries are created if CR0.PG = 0.[2]

— No guest-physical mappings or combined mappings are created with information derived from EPT paging-structure entries that are not present (see Section 29.3.2) or that are misconfigured (see Section 29.3.3.1).

— No combined mappings are created with information derived from guest paging-structure entries that are not present or that set reserved bits.

— No linear mappings are created while EPT is in use.

The following items detail the use of the various mappings:

- If EPT is not in use (e.g., when outside VMX non-root operation), a logical processor may use cached mappings as follows:
  — For accesses using linear addresses, it may use linear mappings associated with the current VPID and the current PCID. It may also use global TLB entries (linear mappings) associated with the current VPID and any PCID.
  — No guest-physical or combined mappings are used while EPT is not in use.
- If EPT is in use, a logical processor may use cached mappings as follows:
  — For accesses using linear addresses, it may use combined mappings associated with the current VPID, the current PCID, and the current EP4TA. It may also use global TLB entries (combined mappings) associated with the current VPID, the current EP4TA, and any PCID.
  — For accesses using guest-physical addresses, it may use guest-physical mappings associated with the current EP4TA.
  — No linear mappings are used while EPT is in use.

29.4.3 Invalidating Cached Translation Information

Software modifications of paging structures (including EPT paging structures and the data structures used to locate SPP vectors) may result in inconsistencies between those structures and the mappings cached by a logical processor. Certain operations invalidate information cached by a logical processor and can be used to eliminate such inconsistencies.

29.4.3.1 Operations that Invalidate Cached Mappings

The following operations invalidate cached mappings as indicated:

- Operations that architecturally invalidate entries in the TLBs or paging-structure caches independent of VMX operation (e.g., the INVLPG and INVPCID instructions) invalidate linear mappings and combined mappings.[3] They are required to do so only for the current VPID (but, for combined mappings, all EP4TAs). Linear mappings for the current VPID are invalidated even if EPT is in use.[4] Combined mappings for the current VPID are invalidated even if EPT is not in use.[5]

---

1. At any given time, a logical processor may be caching combined mappings for a VPID and a PCID that are associated with different EP4TAs. Similarly, it may be caching combined mappings for an EP4TA that are associated with different VPIDs and PCIDs.
2. If the capability MSR IA32_VMX_CR0_FIXED0 reports that CR0.PG must be 1 in VMX operation, CR0.PG can be 0 in VMX non-root operation only if the "unrestricted guest" VM-execution control and bit 31 of the primary processor-based VM-execution controls are both 1.
3. See Section 4.10.4, "Invalidation of TLBs and Paging-Structure Caches," in the *Intel® 64 and IA-32 Architectures Software Developer's Manual, Volume 3A* for an enumeration of operations that architecturally invalidate entries in the TLBs and paging-structure caches independent of VMX operation.
4. While no linear mappings are created while EPT is in use, a logical processor may retain, while EPT is in use, linear mappings (for the same VPID as the current one) there were created earlier, when EPT was not in use.
5. While no combined mappings are created while EPT is not in use, a logical processor may retain, while EPT is in not use, combined mappings (for the same VPID as the current one) there were created earlier, when EPT was in use.

- An EPT violation invalidates any guest-physical mappings (associated with the current EP4TA) that would be used to translate the guest-physical address that caused the EPT violation. If that guest-physical address was the translation of a linear address, the EPT violation also invalidates any combined mappings for that linear address associated with the current PCID, the current VPID and the current EP4TA.
- If the "enable VPID" VM-execution control is 0, VM entries and VM exits invalidate linear mappings and combined mappings associated with VPID 0000H (for all PCIDs). Combined mappings for VPID 0000H are invalidated for all EP4TAs.
- Execution of the INVVPID instruction invalidates linear mappings and combined mappings. Invalidation is based on instruction operands, called the INVVPID type and the INVVPID descriptor. Four INVVPID types are currently defined:
  - **Individual-address.** If the INVVPID type is 0, the logical processor invalidates linear mappings and combined mappings associated with the VPID specified in the INVVPID descriptor and that would be used to translate the linear address specified in of the INVVPID descriptor. Linear mappings and combined mappings for that VPID and linear address are invalidated for all PCIDs and, for combined mappings, all EP4TAs. (The instruction may also invalidate mappings associated with other VPIDs and for other linear addresses.)
  - **Single-context.** If the INVVPID type is 1, the logical processor invalidates all linear mappings and combined mappings associated with the VPID specified in the INVVPID descriptor. Linear mappings and combined mappings for that VPID are invalidated for all PCIDs and, for combined mappings, all EP4TAs. (The instruction may also invalidate mappings associated with other VPIDs.)
  - **All-context.** If the INVVPID type is 2, the logical processor invalidates linear mappings and combined mappings associated with all VPIDs except VPID 0000H and with all PCIDs. (The instruction may also invalidate linear mappings with VPID 0000H.) Combined mappings are invalidated for all EP4TAs.
  - **Single-context-retaining-globals.** If the INVVPID type is 3, the logical processor invalidates linear mappings and combined mappings associated with the VPID specified in the INVVPID descriptor. Linear mappings and combined mappings for that VPID are invalidated for all PCIDs and, for combined mappings, all EP4TAs. The logical processor is **not** required to invalidate information that was used for **global** translations (although it may do so). See Section 4.10, "Caching Translation Information" for details regarding global translations. (The instruction may also invalidate mappings associated with other VPIDs.)

  See Chapter 31 for details of the INVVPID instruction. See Section 29.4.3.3 for guidelines regarding use of this instruction.
- Execution of the INVEPT instruction invalidates guest-physical mappings and combined mappings. Invalidation is based on instruction operands, called the INVEPT type and the INVEPT descriptor. Two INVEPT types are currently defined:
  - **Single-context.** If the INVEPT type is 1, the logical processor invalidates all guest-physical mappings and combined mappings associated with the EP4TA specified in the INVEPT descriptor. Combined mappings for that EP4TA are invalidated for all VPIDs and all PCIDs. (The instruction may invalidate mappings associated with other EP4TAs.)
  - **All-context.** If the INVEPT type is 2, the logical processor invalidates guest-physical mappings and combined mappings associated with all EP4TAs (and, for combined mappings, for all VPIDs and PCIDs).

  See Chapter 31 for details of the INVEPT instruction. See Section 29.4.3.4 for guidelines regarding use of this instruction.
- A power-up or a reset invalidates all linear mappings, guest-physical mappings, and combined mappings.

29.4.3.2 Operations that Need Not Invalidate Cached Mappings

The following items detail cases of operations that are not required to invalidate certain cached mappings:

- Operations that architecturally invalidate entries in the TLBs or paging-structure caches independent of VMX operation are not required to invalidate any guest-physical mappings.
- The INVVPID instruction is not required to invalidate any guest-physical mappings.
- The INVEPT instruction is not required to invalidate any linear mappings.

- VMX transitions are not required to invalidate any guest-physical mappings. If the "enable VPID" VM-execution control is 1, VMX transitions are not required to invalidate any linear mappings or combined mappings.
- The VMXOFF and VMXON instructions are not required to invalidate any linear mappings, guest-physical mappings, or combined mappings.

A logical processor may invalidate any cached mappings at any time. For this reason, the operations identified above may invalidate the indicated mappings despite the fact that doing so is not required.

29.4.3.3 Guidelines for Use of the INVVPID Instruction

The need for VMM software to use the INVVPID instruction depends on how that software is virtualizing memory.

If EPT is not in use, it is likely that the VMM is virtualizing the guest paging structures. Such a VMM may configure the VMCS so that all or some of the operations that invalidate entries the TLBs and the paging-structure caches (e.g., the INVLPG instruction) cause VM exits. If VMM software is emulating these operations, it may be necessary to use the INVVPID instruction to ensure that the logical processor's TLBs and the paging-structure caches are appropriately invalidated.

Requirements of when software should use the INVVPID instruction depend on the specific algorithm being used for page-table virtualization. The following items provide guidelines for software developers:

- Emulation of the INVLPG instruction may require execution of the INVVPID instruction as follows:
  - The INVVPID type is individual-address (0).
  - The VPID in the INVVPID descriptor is the one assigned to the virtual processor whose execution is being emulated.
  - The linear address in the INVVPID descriptor is that of the operand of the INVLPG instruction being emulated.
- Some instructions invalidate all entries in the TLBs and paging-structure caches—except for global translations. An example is the MOV to CR3 instruction. (See Section 4.10, "Caching Translation Information" in the *Intel® 64 and IA-32 Architectures Software Developer's Manual, Volume 3A* for details regarding global translations.) Emulation of such an instruction may require execution of the INVVPID instruction as follows:
  - The INVVPID type is single-context-retaining-globals (3).
  - The VPID in the INVVPID descriptor is the one assigned to the virtual processor whose execution is being emulated.
- Some instructions invalidate all entries in the TLBs and paging-structure caches—including for global translations. An example is the MOV to CR4 instruction if the value of value of bit 4 (page global enable—PGE) is changing. Emulation of such an instruction may require execution of the INVVPID instruction as follows:
  - The INVVPID type is single-context (1).
  - The VPID in the INVVPID descriptor is the one assigned to the virtual processor whose execution is being emulated.

If EPT is not in use, the logical processor associates all mappings it creates with the current VPID, and it will use such mappings to translate linear addresses. For that reason, a VMM should not use the same VPID for different non-EPT guests that use different page tables. Doing so may result in one guest using translations that pertain to the other.

If EPT is in use, the instructions enumerated above might not be configured to cause VM exits and the VMM might not be emulating them. In that case, executions of the instructions by guest software properly invalidate the required entries in the TLBs and paging-structure caches (see Section 29.4.3.1); execution of the INVVPID instruction is not required.

If EPT is in use, the logical processor associates all mappings it creates with the value of bits 51:12 of current EPTP. If a VMM uses different EPTP values for different guests, it may use the same VPID for those guests. Doing so cannot result in one guest using translations that pertain to the other.

The following guidelines apply more generally and are appropriate even if EPT is in use:

- As detailed in Section 30.4.5, an access to the APIC-access page might not cause an APIC-access VM exit if software does not properly invalidate information that may be cached from the paging structures. If, at one

time, the current VPID on a logical processor was a non-zero value X, it is recommended that software use the INVVPID instruction with the "single-context" INVVPID type and with VPID X in the INVVPID descriptor before a VM entry on the same logical processor that establishes VPID X and either (a) the "virtualize APIC accesses" VM-execution control was changed from 0 to 1; or (b) the value of the APIC-access address was changed.

- Software can use the INVVPID instruction with the "all-context" INVVPID type immediately after execution of the VMXON instruction or immediately prior to execution of the VMXOFF instruction. Either prevents potentially undesired retention of information cached from paging structures between separate uses of VMX operation.

29.4.3.4 Guidelines for Use of the INVEPT Instruction

The following items provide guidelines for use of the INVEPT instruction to invalidate information cached from the EPT paging structures.

- Software should use the INVEPT instruction with the "single-context" INVEPT type after making any of the following changes to an EPT paging-structure entry (the INVEPT descriptor should contain an EPTP value that references — directly or indirectly — the modified EPT paging structure):
  - Changing any of the privilege bits 2:0 from 1 to 0.[1]
  - Changing the physical address in bits 51:12.
  - Clearing bit 8 (the accessed flag) if accessed and dirty flags for EPT will be enabled.
  - For an EPT PDPTE or an EPT PDE, changing bit 7 (which determines whether the entry maps a page).
  - For the **last** EPT paging-structure entry used to translate a guest-physical address (an EPT PDPTE with bit 7 set to 1, an EPT PDE with bit 7 set to 1, or an EPT PTE), changing either bits 5:3 or bit 6. (These bits determine the effective memory type of accesses using that EPT paging-structure entry; see Section 29.3.7.)
  - For the **last** EPT paging-structure entry used to translate a guest-physical address (an EPT PDPTE with bit 7 set to 1, an EPT PDE with bit 7 set to 1, or an EPT PTE), clearing bit 9 (the dirty flag) if accessed and dirty flags for EPT will be enabled.
- Software should use the INVEPT instruction with the "single-context" INVEPT type before a VM entry with an EPTP value X such that X[6] = 1 (accessed and dirty flags for EPT are enabled) if the logical processor had earlier been in VMX non-root operation with an EPTP value Y such that Y[6] = 0 (accessed and dirty flags for EPT are not enabled) and Y[51:12] = X[51:12].
- Software may use the INVEPT instruction after modifying a present EPT paging-structure entry (see Section 29.3.2) to change any of the privilege bits 2:0 from 0 to 1.[2] Failure to do so may cause an EPT violation that would not otherwise occur. Because an EPT violation invalidates any mappings that would be used by the access that caused the EPT violation (see Section 29.4.3.1), an EPT violation will not recur if the original access is performed again, even if the INVEPT instruction is not executed.
- Because a logical processor does not cache any information derived from EPT paging-structure entries that are not present (see Section 29.3.2) or misconfigured (see Section 29.3.3.1), it is not necessary to execute INVEPT following modification of an EPT paging-structure entry that had been not present or misconfigured.
- As detailed in Section 30.4.5, an access to the APIC-access page might not cause an APIC-access VM exit if software does not properly invalidate information that may be cached from the EPT paging structures. If EPT was in use on a logical processor at one time with EPTP X, it is recommended that software use the INVEPT instruction with the "single-context" INVEPT type and with EPTP X in the INVEPT descriptor before a VM entry on the same logical processor that enables EPT with EPTP X and either (a) the "virtualize APIC accesses" VM-execution control was changed from 0 to 1; or (b) the value of the APIC-access address was changed.
- Software can use the INVEPT instruction with the "all-context" INVEPT type immediately after execution of the VMXON instruction or immediately prior to execution of the VMXOFF instruction. Either prevents potentially undesired retention of information cached from EPT paging structures between separate uses of VMX operation.

1. If the "mode-based execute control for EPT" VM-execution control is 1, software should use the INVEPT instruction after changing privilege bit 10 from 1 to 0.
2. If the "mode-based execute control for EPT" VM-execution control is 1, software may use the INVEPT instruction after modifying a present EPT paging-structure entry to change privilege bit 10 from 0 to 1.

In a system containing more than one logical processor, software must account for the fact that information from an EPT paging-structure entry may be cached on logical processors other than the one that modifies that entry. The process of propagating the changes to a paging-structure entry is commonly referred to as "TLB shootdown." A discussion of TLB shootdown appears in Section 4.10.5, "Propagation of Paging-Structure Changes to Multiple Processors," in the *Intel® 64 and IA-32 Architectures Software Developer's Manual, Volume 3A*.

CHAPTER 30
APIC VIRTUALIZATION AND VIRTUAL INTERRUPTS

The VMCS includes controls that enable the virtualization of interrupts and the Advanced Programmable Interrupt Controller (APIC).

When these controls are used, the processor will emulate many accesses to the APIC, track the state of the virtual APIC, and deliver virtual interrupts — all in VMX non-root operation with out a VM exit.[1]

The processor tracks the state of the virtual APIC using a virtual-APIC page identified by the virtual-machine monitor (VMM). Section 30.1 discusses the virtual-APIC page and how the processor uses it to track the state of the virtual APIC.

The following are the VM-execution controls relevant to APIC virtualization and virtual interrupts (see Section 25.6 for information about the locations of these controls):

- **Virtual-interrupt delivery.** This control enables the evaluation and delivery of pending virtual interrupts (Section 30.2). It also enables the emulation of writes (memory-mapped or MSR-based, as enabled) to the APIC registers that control interrupt prioritization.
- **Use TPR shadow.** This control enables emulation of accesses to the APIC's task-priority register (TPR) via CR8 (Section 30.3) and, if enabled, via the memory-mapped or MSR-based interfaces.
- **Virtualize APIC accesses.** This control enables virtualization of memory-mapped accesses to the APIC (Section 30.4) by causing VM exits on accesses to a VMM-specified APIC-access page. Some of the other controls, if set, may cause some of these accesses to be emulated rather than causing VM exits.
- **Virtualize x2APIC mode.** This control enables virtualization of MSR-based accesses to the APIC (Section 30.5).
- **APIC-register virtualization.** This control allows memory-mapped and MSR-based reads of most APIC registers (as enabled) by satisfying them from the virtual-APIC page. It directs memory-mapped writes to the APIC-access page to the virtual-APIC page, following them by VM exits for VMM emulation.
- **Process posted interrupts.** This control allows software to post virtual interrupts in a data structure and send a notification to another logical processor; upon receipt of the notification, the target processor will process the posted interrupts by copying them into the virtual-APIC page (Section 30.6).
- **IPI virtualization.** This control enables the virtualization of interprocessor interrupts (Section 30.1.6).

"Virtualize APIC accesses", "virtualize x2APIC mode", "virtual-interrupt delivery", and "APIC-register virtualization" are all secondary processor-based VM-execution controls; if bit 31 of the primary processor-based VM-execution controls is 0, the processor operates as if these controls were all 0. "IPI virtualization" is a tertiary processor-based VM-execution control; if bit 17 of the primary processor-based VM-execution controls is 0, the processor operates as if "IPI virtualization" were 0. See Section 25.6.2.

30.1 VIRTUAL APIC STATE

The **virtual-APIC page** is a 4-KByte region of memory that the processor uses to virtualize certain accesses to APIC registers and to manage virtual interrupts. The physical address of the virtual-APIC page is the **virtual-APIC address**, a 64-bit VM-execution control field in the VMCS (see Section 25.6.8).

Depending on the settings of certain VM-execution controls, the processor may virtualize certain fields on the virtual-APIC page with functionality analogous to that performed by the local APIC. Section 30.1.1 identifies and defines these fields. Section 30.1.2, Section 30.1.3, Section 30.1.4, and Section 30.1.5 detail the actions taken to virtualize updates to some of these fields.

With the exception of fields corresponding to virtualized APIC registers (defined in Section 30.1.1), software may modify the virtual-APIC page referenced by the current VMCS of a logical processor in VMX non-root operation. (This is an exception to the general requirement given in Section 25.11.4.)

1. In most cases, it is not necessary for a virtual-machine monitor (VMM) to inject virtual interrupts as part of VM entry.

30.1.1 Virtualized APIC Registers

Depending on the setting of certain VM-execution controls, a logical processor may virtualize certain accesses to APIC registers using the following fields on the virtual-APIC page:

- **Virtual task-priority register (VTPR)**: the 32-bit field located at offset 080H on the virtual-APIC page.
- **Virtual processor-priority register (VPPR)**: the 32-bit field located at offset 0A0H on the virtual-APIC page.
- **Virtual end-of-interrupt register (VEOI)**: the 32-bit field located at offset 0B0H on the virtual-APIC page.
- **Virtual interrupt-service register (VISR)**: the 256-bit value comprising eight non-contiguous 32-bit fields at offsets 100H, 110H, 120H, 130H, 140H, 150H, 160H, and 170H on the virtual-APIC page. Bit x of the VISR is at bit position (x & 1FH) at offset (100H | ((x & E0H) » 1)). The processor uses only the low 4 bytes of each of the 16-byte fields at offsets 100H, 110H, 120H, 130H, 140H, 150H, 160H, and 170H.
- **Virtual interrupt-request register (VIRR)**: the 256-bit value comprising eight non-contiguous 32-bit fields at offsets 200H, 210H, 220H, 230H, 240H, 250H, 260H, and 270H on the virtual-APIC page. Bit x of the VIRR is at bit position (x & 1FH) at offset (200H | ((x & E0H) » 1)). The processor uses only the low 4 bytes of each of the 16-Byte fields at offsets 200H, 210H, 220H, 230H, 240H, 250H, 260H, and 270H.
- **Virtual interrupt-command register (VICR_LO)**: the 32-bit field located at offset 300H on the virtual-APIC page.
- **Virtual interrupt-command register (VICR_HI)**: the 32-bit field located at offset 310H on the virtual-APIC page.

The VTPR field virtualizes the TPR whenever the "use TPR shadow" VM-execution control is 1. The other fields indicated above virtualize the corresponding APIC registers whenever the "virtual-interrupt delivery" VM-execution control is 1. (VICR_LO and VICR_HI also virtualize the ICR when the "IPI virtualization" VM-execution control is 1.)

30.1.2 TPR Virtualization

The processor performs **TPR virtualization** in response to the following operations: (1) virtualization of the MOV to CR8 instruction; (2) virtualization of a write to offset 080H on the APIC-access page; and (3) virtualization of the WRMSR instruction with ECX = 808H. See Section 30.3, Section 30.4.3, and Section 30.5 for details of when TPR virtualization is performed.

The following pseudocode details the behavior of TPR virtualization:

```
IF "virtual-interrupt delivery" is 0
    THEN
        IF VTPR[7:4] < TPR threshold (see Section 25.6.8)
            THEN cause VM exit due to TPR below threshold;
        FI;
    ELSE
        perform PPR virtualization (see Section 30.1.3);
        evaluate pending virtual interrupts (see Section 30.2.1);
FI;
```

Any VM exit caused by TPR virtualization is trap-like: the instruction causing TPR virtualization completes before the VM exit occurs (for example, the value of CS:RIP saved in the guest-state area of the VMCS references the next instruction).

30.1.3 PPR Virtualization

The processor performs **PPR virtualization** in response to the following operations: (1) VM entry; (2) TPR virtualization; and (3) EOI virtualization. See Section 27.3.2.5, Section 30.1.2, and Section 30.1.4 for details of when PPR virtualization is performed.

PPR virtualization uses the guest interrupt status (specifically, SVI; see Section 25.4.2) and VTPR. The following pseudocode details the behavior of PPR virtualization:

```
IF VTPR[7:4] ≥ SVI[7:4]
```

```
        THEN VPPR := VTPR & FFH;
        ELSE VPPR := SVI & F0H;
    FI;
```

PPR virtualization always clears bytes 3:1 of VPPR.

PPR virtualization is caused only by TPR virtualization, EOI virtualization, and VM entry. Delivery of a virtual interrupt also modifies VPPR, but in a different way (see Section 30.2.2). No other operations modify VPPR, even if they modify SVI, VISR, or VTPR.

30.1.4 EOI Virtualization

The processor performs **EOI virtualization** in response to the following operations: (1) virtualization of a write to offset 0B0H on the APIC-access page; and (2) virtualization of the WRMSR instruction with ECX = 80BH. See Section 30.4.3 and Section 30.5 for details of when EOI virtualization is performed. EOI virtualization occurs only if the "virtual-interrupt delivery" VM-execution control is 1.

EOI virtualization uses and updates the guest interrupt status (specifically, SVI; see Section 25.4.2). The following pseudocode details the behavior of EOI virtualization:

```
Vector := SVI;
VISR[Vector] := 0; (see Section 30.1.1 for definition of VISR)
IF any bits set in VISR
    THEN SVI := highest index of bit set in VISR
    ELSE SVI := 0;
FI;
perform PPR virtualiation (see Section 30.1.3);
IF EOI_exit_bitmap[Vector] = 1 (see Section 25.6.8 for definition of EOI_exit_bitmap)
    THEN cause EOI-induced VM exit with Vector as exit qualification;
    ELSE evaluate pending virtual interrupts; (see Section 30.2.1)
FI;
```

Any VM exit caused by EOI virtualization is trap-like: the instruction causing EOI virtualization completes before the VM exit occurs (for example, the value of CS:RIP saved in the guest-state area of the VMCS references the next instruction).

30.1.5 Self-IPI Virtualization

The processor performs **self-IPI virtualization** in response to the following operations: (1) virtualization of a write to offset 300H on the APIC-access page; and (2) virtualization of the WRMSR instruction with ECX = 83FH. See Section 30.4.3 and Section 30.5 for details of when self-IPI virtualization is performed. Self-IPI virtualization occurs only if the "virtual-interrupt delivery" VM-execution control is 1.

Each operation that leads to self-IPI virtualization provides an 8-bit vector (see Section 30.4.3 and Section 30.5). Self-IPI virtualization updates the guest interrupt status (specifically, RVI; see Section 25.4.2). The following pseudocode details the behavior of self-IPI virtualization:

```
VIRR[Vector] := 1; (see Section 30.1.1 for definition of VIRR)
RVI := max{RVI,Vector};
evaluate pending virtual interrupts; (see Section 30.2.1)
```

30.1.6 IPI Virtualization

The processor performs **IPI virtualization** in response to the following operations: (1) virtualization of a write to offset 300H on the APIC-access page (Section 30.4.3); (2) virtualization of the WRMSR instruction with ECX = 830H (Section 30.5); and (3) virtualization of some executions of SENDUIPI (Section 30.7). IPI virtualization occurs only if the "IPI virtualization" VM-execution control is 1.

Each operation that leads to IPI virtualization provides an 8-bit virtual vector V and a 32-bit virtual APIC ID T. IPI virtualization uses those values to initiate the indicated virtual IPI using the PID-pointer table. (Recall that the PID-pointer table address is a field in the VMCS, as is the last PID-pointer index.)

Specifically, the CPU uses the virtual APIC ID to select an entry from the PID-pointer table. It uses the address in that entry to locate a posted-interrupt descriptor (PID) and then posts a virtual interrupt with vector V in that PID. The following pseudocode details the behavior of self-IPI virtualization:

```
IF V < 16
    THEN APIC-write VM exit;                                    // illegal vector
ELSE IF T ≤ last PID-pointer index
    THEN
        PID_ADDR := 8 bytes at (PID-pointer table address + (T « 3));
        IF PID_ADDR sets bits beyond the processor's physical-address width OR
                PID_ADDR[5:0] ≠ 000001b                         // PID pointer not valid or reserved bits set
            THEN APIC-write VM exit;                            // See Section 30.4.3.3
            ELSE
                PIR := 32 bytes at PID_ADDR;                    // under lock
                PIR[V] := 1;
                store PIR at PID_ADDR;                          // release lock
                NotifyInfo := 8 bytes at PID_ADDR + 32;         // under lock
                IF NotifyInfo.ON = 0 AND NotifyInfo.SN = 0
                    THEN
                        NotifyInfo.ON := 1;
                        SendNotify := 1;
                    ELSE SendNotify := 0;
                FI;
                store NotifyInfo at PID_ADDR + 32;              // release lock
                IF SendNotify = 1
                    THEN send an IPI specified by NotifyInfo.NDST and NotifyInfo.NV;
                FI;
        FI;
    ELSE APIC-write VM exit;                                    // virtual APIC ID beyond end of tables
FI;
```

The sending of the notification IPI is indicated by fields in the selected PID: NDST (PID[319:288]) and NV (PID[279:272]):

- If the local APIC is in xAPIC mode, this is the IPI that would be generated by writing NDST[15:8] (PID[303:296]) to ICR_HI[31:24] (offset 310H from IA32_APIC_BASE) and then writing NV to ICR_LO (offset 300H from IA32_APIC_BASE).
- If the local APIC is in x2APIC mode, this is the IPI that would be generated by executing WRMSR with ECX = 830H (ICR), EAX = NV, and EDX = NDST.

If the pseudocode specifies an APIC-write VM exit, this VM exit occurs as if there had been a write access to page offset 300H on the APIC-access page (see Section 30.4.3.3).

30.2 EVALUATION AND DELIVERY OF VIRTUAL INTERRUPTS

If the "virtual-interrupt delivery" VM-execution control is 1, certain actions in VMX non-root operation or during VM entry cause the processor to evaluate and deliver virtual interrupts.

Evaluation of virtual interrupts is triggered by certain actions change the state of the virtual-APIC page and is described in Section 30.2.1. This evaluation may result in recognition of a virtual interrupt. Once a virtual interrupt is recognized, the processor may deliver it within VMX non-root operation without a VM exit. Virtual-interrupt delivery is described in Section 30.2.2.

30.2.1 Evaluation of Pending Virtual Interrupts

If the "virtual-interrupt delivery" VM-execution control is 1, certain actions cause a logical processor to **evaluate pending virtual interrupts**.

The following actions cause the evaluation of pending virtual interrupts: VM entry; TPR virtualization; EOI virtualization; self-IPI virtualization; and posted-interrupt processing. See Section 27.3.2.5, Section 30.1.2, Section

30.1.4, Section 30.1.5, and Section 30.6 for details of when evaluation of pending virtual interrupts is performed. No other operations cause the evaluation of pending virtual interrupts, even if they modify RVI or VPPR.

Evaluation of pending virtual interrupts uses the guest interrupt status (specifically, RVI; see Section 25.4.2). The following pseudocode details the evaluation of pending virtual interrupts:

```
IF "interrupt-window exiting" is 0 AND
RVI[7:4] > VPPR[7:4] (see Section 30.1.1 for definition of VPPR)
        THEN recognize a pending virtual interrupt;
    ELSE
        do not recognize a pending virtual interrupt;
FI;
```

Once recognized, a virtual interrupt may be delivered in VMX non-root operation; see Section 30.2.2.

Evaluation of pending virtual interrupts is caused only by VM entry, TPR virtualization, EOI virtualization, self-IPI virtualization, and posted-interrupt processing. No other operations do so, even if they modify RVI or VPPR. The logical processor ceases recognition of a pending virtual interrupt following the delivery of a virtual interrupt.

30.2.2 Virtual-Interrupt Delivery

If a virtual interrupt has been recognized (see Section 30.2.1), it is delivered at an instruction boundary when the following conditions all hold: (1) RFLAGS.IF = 1; (2) there is no blocking by STI; (3) there is no blocking by MOV SS or by POP SS; and (4) the "interrupt-window exiting" VM-execution control is 0.

Virtual-interrupt delivery has the same priority as that of VM exits due to the 1-setting of the "interrupt-window exiting" VM-execution control.[1] Thus, non-maskable interrupts (NMIs) and higher priority events take priority over delivery of a virtual interrupt; delivery of a virtual interrupt takes priority over external interrupts and lower priority events.

Virtual-interrupt delivery wakes a logical processor from the same inactive activity states as would an external interrupt. Specifically, it wakes a logical processor from the states entered using the HLT and MWAIT instructions. It does not wake a logical processor in the shutdown state or in the wait-for-SIPI state.

Virtual-interrupt delivery updates the guest interrupt status (both RVI and SVI; see Section 25.4.2) and delivers an event within VMX non-root operation without a VM exit. The following pseudocode details the behavior of virtual-interrupt delivery (see Section 30.1.1 for definition of VISR, VIRR, and VPPR):

```
Vector  := RVI;
VISR[Vector]  := 1;
SVI  := Vector;
VPPR  := Vector & F0H;
VIRR[Vector]  := 0;
IF any bits set in VIRR
    THEN RVI  := highest index of bit set in VIRR
    ELSE RVI  := 0;
FI;
cease recognition of any pending virtual interrupt;
IF transactional execution is in effect
    THEN abort transactional execution and transition to a non-transactional execution;
FI;
IF logical processor is in enclave mode
    THEN cause an Asynchronous Enclave Exit (AEX) (see Chapter 37, "Enclave Exiting Events")
FI;
IF CR4.UINTR = 1 AND IA32_EFER.LMA = 1 AND Vector = UINV
    THEN virtualize user-interrupt notification identification and processing (see Section 30.2.3)
    ELSE deliver interrupt with Vector through IDT;
```

1. A logical processor never recognizes or delivers a virtual interrupt if the "interrupt-window exiting" VM-execution control is 1. Because of this, the relative priority of virtual-interrupt delivery and VM exits due to the 1-setting of that control is not defined.

```
FI;
```

30.2.3 Virtualizing User-Interrupt Notifications

Section 7.5 describes the process of user-interrupt notification identification and processing. If the "virtual-interrupt delivery" VM-execution control is 1, this process is modified as described in the following paragraphs.

The virtualized form of user-interrupt notification identification begins as described in Section 30.2.2. Following this, instead of writing zero to the EOI register in the local APIC, the logical processor performs the initial steps of EOI virtualization:

```
VISR[V] := 0;
IF any bit is set in VISR
    THEN SVI := highest index of bit set in VISR
    ELSE SVI := 0;
FI;
perform PPR virtualization (Section 30.1.3);
```

Unlike EOI virtualization resulting from a guest write to the EOI register (as defined for virtual-interrupt delivery), the logical processor does not check the EOI-exit bitmap as part of this modified form of user-interrupt notification identification, and the corresponding VM exits cannot occur.

Following this modified form of user-interrupt notification identification, the logical processor then performs user-interrupt notification processing as specified in Section 7.5.2.

A logical processor is not interruptible during this modified form of user-interrupt notification identification or between it and any subsequent user-interrupt notification processing.

If the user-interrupt notification identification that precedes user-interrupt notification processing occurred while the logical processor was in the HLT state, the logical processor returns to the HLT state following user-interrupt notification processing.

30.3 VIRTUALIZING CR8-BASED TPR ACCESSES

In 64-bit mode, software can access the local APIC's task-priority register (TPR) through CR8. Specifically, software uses the MOV from CR8 and MOV to CR8 instructions (see Section 11.8.6, "Task Priority in IA-32e Mode"). This section describes how these accesses can be virtualized.

A virtual-machine monitor can virtualize these CR8-based APIC accesses by setting the "CR8-load exiting" and "CR8-store exiting" VM-execution controls, ensuring that the accesses cause VM exits (see Section 26.1.3). Alternatively, there are methods for virtualizing some CR8-based APIC accesses without VM exits.

Normally, an execution of MOV from CR8 or MOV to CR8 that does not fault or cause a VM exit accesses the APIC's TPR. However, such an execution are treated specially if the "use TPR shadow" VM-execution control is 1. The following items provide details:

- **MOV from CR8.** The instruction loads bits 3:0 of its destination operand with bits 7:4 of VTPR (see Section 30.1.1). Bits 63:4 of the destination operand are cleared.
- **MOV to CR8.** The instruction stores bits 3:0 of its source operand into bits 7:4 of VTPR; the remainder of VTPR (bits 3:0 and bits 31:8) are cleared. Following this, the processor performs TPR virtualization (see Section 30.1.2).

30.4 VIRTUALIZING MEMORY-MAPPED APIC ACCESSES

When the local APIC is in xAPIC mode, software accesses the local APIC's control registers using a memory-mapped interface. Specifically, software uses linear addresses that translate to physical addresses on page frame indicated by the base address in the IA32_APIC_BASE MSR (see Section 11.4.4, "Local APIC Status and Location"). This section describes how these accesses can be virtualized.

A virtual-machine monitor (VMM) can virtualize these memory-mapped APIC accesses by ensuring that any access to a linear address that would access the local APIC instead causes a VM exit. This could be done using paging or the extended page-table mechanism (EPT). Another way is by using the 1-setting of the "virtualize APIC accesses" VM-execution control.

If the "virtualize APIC accesses" VM-execution control is 1, the logical processor treats specially memory accesses using linear addresses that translate to physical addresses in the 4-KByte **APIC-access page**.[1,2] (The APIC-access page is identified by the **APIC-access address**, a field in the VMCS; see Section 25.6.8.)

In general, an access to the APIC-access page causes an **APIC-access VM exit**. APIC-access VM exits provide a VMM with information about the access causing the VM exit. Section 30.4.1 discusses the priority of APIC-access VM exits.

Certain VM-execution controls enable the processor to virtualize certain accesses to the APIC-access page without a VM exit. In general, this virtualization causes these accesses to be made to the virtual-APIC page instead of the APIC-access page.

NOTES

Unless stated otherwise, this section characterizes only linear accesses to the APIC-access page; an access to the APIC-access page is a linear access if (1) it results from a memory access using a linear address; and (2) the access's physical address is the translation of that linear address. Section 30.4.6 discusses accesses to the APIC-access page that are not linear accesses.

The distinction between the APIC-access page and the virtual-APIC page allows a VMM to share paging structures or EPT paging structures among the virtual processors of a virtual machine (the shared paging structures referencing the same APIC-access address, which appears in the VMCS of all the virtual processors) while giving each virtual processor its own virtual APIC (the VMCS of each virtual processor will have a unique virtual-APIC address).

Section 30.4.2 discusses when and how the processor may virtualize read accesses from the APIC-access page. Section 30.4.3 does the same for write accesses. When virtualizing a write to the APIC-access page, the processor typically takes actions in addition to passing the write through to the virtual-APIC page.

The discussion in those sections uses the concept of an **operation** within which these memory accesses may occur. For those discussions, an "operation" can be an iteration of a REP-prefixed string instruction, an execution of any other instruction, or delivery of an event through the IDT.

The 1-setting of the "virtualize APIC accesses" VM-execution control may also affect accesses to the APIC-access page that do not result directly from linear addresses. This is discussed in Section 30.4.6.

Special treatment may apply to Intel SGX instructions or if the logical processor is in enclave mode. See Section 39.5.3 for details.

30.4.1 Priority of APIC-Access VM Exits

The following items specify the priority of APIC-access VM exits relative to other events.

- The priority of an APIC-access VM exit due to a memory access is below that of any page fault or EPT violation that that access may incur. That is, an access does not cause an APIC-access VM exit if it would cause a page fault or an EPT violation.

---

1. Even when addresses are translated using EPT (see Section 29.3), the determination of whether an APIC-access VM exit occurs depends on an access's physical address, not its guest-physical address. Even when CR0.PG = 0, ordinary memory accesses by software use linear addresses; the fact that CR0.PG = 0 means only that the identity translation is used to convert linear addresses to physical (or guest-physical) addresses.
2. If EPT is enabled and there is write to a guest-physical address that translates to an address on the APIC-access page that is eligible for sub-page write permissions (see Section 29.3.4.1), the processor may treat the write as if the "virtualize APIC accesses" VM-execution control were 0 (and not apply the treatment specified in this section). For that reason, it is recommended that software not configure any guest-physical address that translates to an address on the APIC-access page to be eligible for sub-page write permissions.

- A memory access does not cause an APIC-access VM exit until after the accessed flags are set in the paging structures (including EPT paging structures, if enabled).
- A write access does not cause an APIC-access VM exit until after the dirty flags are set in the appropriate paging structure and EPT paging structure (if enabled).
- With respect to all other events, any APIC-access VM exit due to a memory access has the same priority as any page fault or EPT violation that the access could cause. (This item applies to other events that the access may generate as well as events that may be generated by other accesses by the same operation.)

These principles imply, among other things, that an APIC-access VM exit may occur during the execution of a repeated string instruction (including INS and OUTS). Suppose, for example, that the first *n* iterations (*n* may be 0) of such an instruction do not access the APIC-access page and that the next iteration does access that page. As a result, the first *n* iterations may complete and be followed by an APIC-access VM exit. The instruction pointer saved in the VMCS references the repeated string instruction and the values of the general-purpose registers reflect the completion of *n* iterations.

30.4.2 Virtualizing Reads from the APIC-Access Page

A read access from the APIC-access page causes an APIC-access VM exit if any of the following are true:

- The "use TPR shadow" VM-execution control is 0.
- The access is for an instruction fetch.
- The access is more than 32 bits in size.
- The access is part of an operation for which the processor has already virtualized a write to the APIC-access page.
- The access is not entirely contained within the low 4 bytes of a naturally aligned 16-byte region. That is, bits 3:2 of the access's address are 0, and the same is true of the address of the highest byte accessed.

If none of the above are true, whether a read access is virtualized depends on the setting of the "APIC-register virtualization" and "virtual-interrupt delivery" VM-execution controls:

- A read access is virtualized if its page offset is 080H (task priority) regardless of the settings of the "APIC-register virtualization" and "virtual-interrupt delivery" VM-execution controls.
- If the "virtual-interrupt delivery" VM-execution control is 1, a read access is virtualized if its page offset is 0B0H (end of interrupt) or 300H (interrupt command — low).
- If "APIC-register virtualization" is 1, a read access is virtualized if it is entirely within one the following ranges of offsets:
  - 020H–023H (local APIC ID);
  - 030H–033H (local APIC version);
  - 080H–083H (task priority);
  - 0B0H–0B3H (end of interrupt);
  - 0D0H–0D3H (logical destination);
  - 0E0H–0E3H (destination format);
  - 0F0H–0F3H (spurious-interrupt vector);
  - 100H–103H, 110H–113H, 120H–123H, 130H–133H, 140H–143H, 150H–153H, 160H–163H, or 170H–173H (in-service);
  - 180H–183H, 190H–193H, 1A0H–1A3H, 1B0H–1B3H, 1C0H–1C3H, 1D0H–1D3H, 1E0H–1E3H, or 1F0H–1F3H (trigger mode);
  - 200H–203H, 210H–213H, 220H–223H, 230H–233H, 240H–243H, 250H–253H, 260H–263H, or 270H–273H (interrupt request);
  - 280H–283H (error status);
  - 300H–303H or 310H–313H (interrupt command);

— 320H–323H, 330H–333H, 340H–343H, 350H–353H, 360H–363H, or 370H–373H (LVT entries);

— 380H–383H (initial count); or

— 3E0H–3E3H (divide configuration).

In all other cases, the access causes an APIC-access VM exit.

A read access from the APIC-access page that is virtualized returns data from the corresponding page offset on the virtual-APIC page.[1]

30.4.3 Virtualizing Writes to the APIC-Access Page

Whether a write access to the APIC-access page is virtualized depends on the settings of the VM-execution controls and the page offset of the access. Section 30.4.3.1 details when APIC-write virtualization occurs.

Unlike reads, writes to the local APIC have side effects; because of this, virtualization of writes to the APIC-access page may require emulation specific to the access's page offset (which identifies the APIC register being accessed). Section 30.4.3.2 describes this **APIC-write emulation**.

For some page offsets, it is necessary for software to complete the virtualization after a write completes. In these cases, the processor causes an **APIC-write VM exit** to invoke VMM software. Section 30.4.3.3 discusses APIC-write VM exits.

30.4.3.1 Determining Whether a Write Access is Virtualized

A write access to the APIC-access page causes an APIC-access VM exit if any of the following are true:

- The "use TPR shadow" VM-execution control is 0.
- The access is more than 32 bits in size.
- The access is part of an operation for which the processor has already virtualized a write (with a different page offset or a different size) to the APIC-access page.
- The access is not entirely contained within the low 4 bytes of a naturally aligned 16-byte region. That is, bits 3:2 of the access's address are 0, and the same is true of the address of the highest byte accessed.

If none of the above are true, whether a write access is virtualized depends on the settings of the "APIC-register virtualization", "virtual-interrupt delivery", and "IPI virtualization" VM-execution controls:

- A write access is virtualized if its page offset is 080H (task priority) regardless of the settings of the "APIC-register virtualization" and "virtual-interrupt delivery" VM-execution controls.
- If the "virtual-interrupt delivery" VM-execution control is 1, a write access is virtualized if its page offset is 0B0H (end of interrupt) or 300H (interrupt command — low).
- If the "IPI virtualization" VM-execution control is 1, a write access is virtualized if its page offset is 300H.
- If the "APIC-register virtualization" VM-execution control is 1, a write access is virtualized if it is entirely within one the following ranges of offsets:
  — 020H–023H (local APIC ID);
  — 080H–083H (task priority);
  — 0B0H–0B3H (end of interrupt);
  — 0D0H–0D3H (logical destination);
  — 0E0H–0E3H (destination format);
  — 0F0H–0F3H (spurious-interrupt vector);
  — 280H–283H (error status);
  — 300H–303H or 310H–313H (interrupt command);

1. The memory type used for accesses that read from the virtual-APIC page is reported in bits 53:50 of the IA32_VMX_BASIC MSR (see Appendix A.1).

— 320H–323H, 330H–333H, 340H–343H, 350H–353H, 360H–363H, or 370H–373H (LVT entries);

— 380H–383H (initial count); or

— 3E0H–3E3H (divide configuration).

In all other cases, the access causes an APIC-access VM exit.

The processor virtualizes a write access to the APIC-access page by writing data to the corresponding page offset on the virtual-APIC page.[1] Following this, the processor performs certain actions after completion of the operation of which the access was a part.[2] APIC-write emulation is described in Section 30.4.3.2.

30.4.3.2 APIC-Write Emulation

If the processor virtualizes a write access to the APIC-access page, it performs additional actions after completion of an operation of which the access was a part. These actions are called **APIC-write emulation**.

The details of APIC-write emulation depend upon the page offset of the virtualized write access:[3]

- 080H (task priority). The processor clears bytes 3:1 of VTPR and then causes TPR virtualization (Section 30.1.2).
- 0B0H (end of interrupt). If the "virtual-interrupt delivery" VM-execution control is 1, the processor clears VEOI and then causes EOI virtualization (Section 30.1.4); otherwise, the processor causes an APIC-write VM exit (Section 30.4.3.3).
- 300H (interrupt command — low). If the "virtual-interrupt delivery" VM-execution control is 1, the processor checks the value of VICR_LO to determine whether the following are all true:

  — Reserved bits (31:20, 17:16, 13) and bit 12 (delivery status) are all 0.

  — Bits 19:18 (destination shorthand) are 01B (self).

  — Bit 15 (trigger mode) is 0 (edge).

  — Bits 10:8 (delivery mode) are 000B (fixed).

  — Bits 7:4 (the upper half of the vector) are **not** 0000B.

  If all of the items above are true, the processor performs self-IPI virtualization using the 8-bit vector in byte 0 of VICR_LO (Section 30.1.5).

  If the "virtual-interrupt delivery" VM-execution control is 0, or if any of the items above are false, behavior depends on the setting of the "IPI virtualization" VM-execution control:

  — If the "IPI virtualization" VM-execution control is 1, the processor checks the value of VICR_LO to determine whether the following are all true:

    - Reserved bits (31:20, 17:16, 13) and bit 12 (delivery status) are all 0.
    - Bits 19:18 (destination shorthand) are 00B (no shorthand).
    - Bit 15 (trigger mode) is 0 (edge).
    - Bit 11 (destination mode) is 0 (physical).
    - Bits 10:8 (delivery mode) are 000B (fixed).

    If all of the items above are true, the processor performs IPI virtualization using the 8-bit vector in byte 0 of VICR_LO and the 8-bit APIC ID in VICR_HI[31:24] (Section 30.1.6); otherwise, the processor causes an APIC-write VM exit.

  — If the "IPI virtualization" VM-execution control is 0, the processor causes an APIC-write VM exit.

1. The memory type used for accesses that write to the virtual-APIC page is reported in bits 53:50 of the IA32_VMX_BASIC MSR (see Appendix A.1).
2. Recall that, for the purposes of this discussion, an operation is an iteration of a REP-prefixed string instruction, an execution of any other instruction, or delivery of an event through the IDT.
3. For any operation, there can be only one page offset for which a write access was virtualized. This is because a write access is not virtualized if the processor has already virtualized a write access for the same operation with a different page offset.

- 310H–313H (interrupt command — high). The processor clears bytes 2:0 of VICR_HI. No other virtualization or VM exit occurs.
- Any other page offset. The processor causes an APIC-write VM exit.

APIC-write emulation takes priority over system-management interrupts (SMIs), INIT signals, and lower priority events. APIC-write emulation is not blocked if RFLAGS.IF = 0 or by the MOV SS, POP SS, or STI instructions.

If an operation causes a fault after a write access to the APIC-access page and before APIC-write emulation, and that fault is delivered without a VM exit, APIC-write emulation occurs after the fault is delivered and before the fault handler can execute. If an operation causes a VM exit (perhaps due to a fault) after a write access to the APIC-access page and before APIC-write emulation, the APIC-write emulation does not occur.

30.4.3.3 APIC-Write VM Exits

In certain cases, VMM software must be invoked to complete the virtualization of a write access to the APIC-access page. In this case, APIC-write emulation causes an **APIC-write VM exit**. (Section 30.4.3.2 details the cases that causes APIC-write VM exits.)

APIC-write VM exits are invoked by APIC-write emulation, and APIC-write emulation occurs after an operation that performs a write access to the APIC-access page. Because of this, every APIC-write VM exit is trap-like: it occurs after completion of the operation containing the write access that caused the VM exit (for example, the value of CS:RIP saved in the guest-state area of the VMCS references the next instruction).

The basic exit reason for an APIC-write VM exit is "APIC write." The exit qualification is the page offset of the write access that led to the VM exit.

As noted in Section 30.5, execution of WRMSR with ECX = 83FH (self-IPI MSR) can lead to an APIC-write VM exit if the "virtual-interrupt delivery" VM-execution control is 1; the exit qualification for the APIC-write VM exit is 3F0H. As noted in Section 30.1.6 and in Section 30.7, IPI virtualization and execution of SENDUIPI may lead to APIC-write VM exits; these VM exits produce an exit qualification of 300H.

30.4.4 Instruction-Specific Considerations

Certain instructions that use linear address may cause page faults even though they do not use those addresses to access memory. The APIC-virtualization features may affect these instructions as well:

- **CLFLUSH, CLFLUSHOPT.** With regard to faulting, the processor operates as if each of these instructions reads from the linear address in its source operand. If that address translates to one on the APIC-access page, the instruction may cause an APIC-access VM exit. If it does not, it will flush the corresponding cache line on the virtual-APIC page instead of the APIC-access page.
- **ENTER.** With regard to faulting, the processor operates if ENTER writes to the byte referenced by the final value of the stack pointer (even though it does not if its size operand is non-zero). If that value translates to an address on the APIC-access page, the instruction may cause an APIC-access VM exit. If it does not, it will cause the APIC-write emulation appropriate to the address's page offset.
- **MASKMOVQ and MASKMOVDQU.** Even if the instruction's mask is zero, the processor may operate with regard to faulting as if MASKMOVQ or MASKMOVDQU writes to memory (the behavior is implementation-specific). In such a situation, an APIC-access VM exit may occur.
- **MONITOR.** With regard to faulting, the processor operates as if MONITOR reads from the effective address in RAX. If the resulting linear address translates to one on the APIC-access page, the instruction may cause an APIC-access VM exit.[1] If it does not, it will monitor the corresponding address on the virtual-APIC page instead of the APIC-access page.
- **PREFETCH.** An execution of the PREFETCH instruction that would result in an access to the APIC-access page does not cause an APIC-access VM exit. Such an access may prefetch data; if so, it is from the corresponding address on the virtual-APIC page.

1. This chapter uses the notation RAX, RIP, RSP, RFLAGS, etc. for processor registers because most processors that support VMX operation also support Intel 64 architecture. For IA-32 processors, this notation refers to the 32-bit forms of those registers (EAX, EIP, ESP, EFLAGS, etc.). In a few places, notation such as EAX is used to refer specifically to lower 32 bits of the indicated register.

Virtualization of accesses to the APIC-access page is principally intended for basic instructions such as AND, MOV, OR, TEST, XCHG, and XOR. Use of an instruction that normally operates on floating-point, SSE, AVX, or AVX-512 registers may cause an APIC-access VM exit unconditionally regardless of the page offset it accesses on the APIC-access page.

30.4.5 Issues Pertaining to Page Size and TLB Management

The 1-setting of the "virtualize APIC accesses" VM-execution is guaranteed to apply only if translations to the APIC-access address use a 4-KByte page. The following items provide details:

- If EPT is not in use, any linear address that translates to an address on the APIC-access page should use a 4-KByte page. Any access to a linear address that translates to the APIC-access page using a larger page may operate as if the "virtualize APIC accesses" VM-execution control were 0.
- If EPT is in use, any guest-physical address that translates to an address on the APIC-access page should use a 4-KByte page. Any access to a linear address that translates to a guest-physical address that in turn translates to the APIC-access page using a larger page may operate as if the "virtualize APIC accesses" VM-execution control were 0. (This is true also for guest-physical accesses to the APIC-access page; see Section 30.4.6.1.)

In addition, software should perform appropriate TLB invalidation when making changes that may affect APIC-virtualization. The specifics depend on whether VPIDs or EPT is being used:

- **VPIDs being used but EPT not being used.** Suppose that there is a VPID that has been used before and that software has since made either of the following changes: (1) set the "virtualize APIC accesses" VM-execution control when it had previously been 0; or (2) changed the paging structures so that some linear address translates to the APIC-access address when it previously did not. In that case, software should execute INVVPID (see "INVVPID— Invalidate Translations Based on VPID" in Section 31.3) before performing on the same logical processor and with the same VPID.[1]
- **EPT being used.** Suppose that there is an EPTP value that has been used before and that software has since made either of the following changes: (1) set the "virtualize APIC accesses" VM-execution control when it had previously been 0; or (2) changed the EPT paging structures so that some guest-physical address translates to the APIC-access address when it previously did not. In that case, software should execute INVEPT (see "INVEPT— Invalidate Translations Derived from EPT" in Section 31.3) before performing on the same logical processor and with the same EPTP value.[2]
- **Neither VPIDs nor EPT being used.** No invalidation is required.

Failure to perform the appropriate TLB invalidation may result in the logical processor operating as if the "virtualize APIC accesses" VM-execution control were 0 in responses to accesses to the affected address. (No invalidation is necessary if neither VPIDs nor EPT is being used.)

30.4.6 APIC Accesses Not Directly Resulting From Linear Addresses

Section 30.4 has described the treatment of accesses that use linear addresses that translate to addresses on the APIC-access page. This section considers memory accesses that do not result directly from linear addresses.

- An access is called a **guest-physical access** if (1) CR0.PG = 1;[3] (2) the "enable EPT" VM-execution control is 1;[4] (3) the access's physical address is the result of an EPT translation; and (4) either (a) the access was not generated by a linear address; or (b) the access's guest-physical address is not the translation of the access's linear address. Section 30.4.6.1 discusses the treatment of guest-physical accesses to the APIC-access page.

---

1. INVVPID should use either (1) the all-contexts INVVPID type; (2) the single-context INVVPID type with the VPID in the INVVPID descriptor; or (3) the individual-address INVVPID type with the linear address and the VPID in the INVVPID descriptor.
2. INVEPT should use either (1) the global INVEPT type; or (2) the single-context INVEPT type with the EPTP value in the INVEPT descriptor.
3. If the capability MSR IA32_VMX_CR0_FIXED0 reports that CR0.PG must be 1 in VMX operation, CR0.PG must be 1 unless the "unrestricted guest" VM-execution control and bit 31 of the primary processor-based VM-execution controls are both 1.
4. "Enable EPT" is a secondary processor-based VM-execution control. If bit 31 of the primary processor-based VM-execution controls is 0, VMX non-root operation functions as if the "enable EPT" VM-execution control were 0. See Section 25.6.2.

- An access is called a **physical access** if (1) either (a) the "enable EPT" VM-execution control is 0; or (b) the access's physical address is not the result of a translation through the EPT paging structures; and (2) either (a) the access is not generated by a linear address; or (b) the access's physical address is not the translation of its linear address. Section 30.4.6.2 discusses the treatment of physical accesses to the APIC-access page.

30.4.6.1 Guest-Physical Accesses to the APIC-Access Page

Guest-physical accesses include the following when guest-physical addresses are being translated using EPT:

- Reads from the guest paging structures when translating a linear address (such an access uses a guest-physical address that is not the translation of that linear address).
- Loads of the page-directory-pointer-table entries by MOV to CR when the logical processor is using (or that causes the logical processor to use) PAE paging (see Section 4.4).
- Updates to the accessed and dirty flags in the guest paging structures when using a linear address (such an access uses a guest-physical address that is not the translation of that linear address).
- Memory accesses by Intel Processor Trace when the "Intel PT uses guest physical addresses" VM-execution control is 1 (see Section 26.5.4).

Every guest-physical access using a guest-physical address that translates to an address on the APIC-access page causes an APIC-access VM exit. Such accesses are never virtualized regardless of the page offset.

The following items specify the priority relative to other events of APIC-access VM exits caused by guest-physical accesses to the APIC-access page.

- The priority of an APIC-access VM exit caused by a guest-physical access to memory is below that of any EPT violation that that access may incur. That is, a guest-physical access does not cause an APIC-access VM exit if it would cause an EPT violation.
- With respect to all other events, any APIC-access VM exit caused by a guest-physical access has the same priority as any EPT violation that the guest-physical access could cause.

30.4.6.2 Physical Accesses to the APIC-Access Page

Physical accesses include the following:

- If the "enable EPT" VM-execution control is 0:
  - Reads from the paging structures when translating a linear address.
  - Loads of the page-directory-pointer-table entries by MOV to CR when the logical processor is using (or that causes the logical processor to use) PAE paging (see Section 4.4).
  - Updates to the accessed and dirty flags in the paging structures.
- If the "enable EPT" VM-execution control is 1, accesses to the EPT paging structures (including updates to the accessed and dirty flags for EPT).
- Any of the following accesses made by the processor to support VMX non-root operation:
  - Accesses to the VMCS region.
  - Accesses to data structures referenced (directly or indirectly) by physical addresses in VM-execution control fields in the VMCS. These include the I/O bitmaps, the MSR bitmaps, and the virtual-APIC page.
- Accesses that effect transitions into and out of SMM.[1] These include the following:
  - Accesses to SMRAM during SMI delivery and during execution of RSM.
  - Accesses during SMM VM exits (including accesses to MSEG) and during VM entries that return from SMM.

A physical access to the APIC-access page may or may not cause an APIC-access VM exit. If it does not cause an APIC-access VM exit, it may access the APIC-access page or the virtual-APIC page. Physical write accesses to the APIC-access page may or may not cause APIC-write emulation or APIC-write VM exits.

1. Technically, these accesses do not occur in VMX non-root operation. They are included here for clarity.

The priority of an APIC-access VM exit caused by physical access is not defined relative to other events that the access may cause.

It is recommended that software not set the APIC-access address to any of the addresses used by physical memory accesses (identified above). For example, it should not set the APIC-access address to the physical address of any of the active paging structures if the "enable EPT" VM-execution control is 0.

30.5 VIRTUALIZING MSR-BASED APIC ACCESSES

When the local APIC is in x2APIC mode, software accesses the local APIC's control registers using the MSR interface. Specifically, software uses the RDMSR and WRMSR instructions, setting ECX (identifying the MSR being accessed) to values in the range 800H–8FFH (see Section 11.12, "Extended XAPIC (x2APIC)"). This section describes how these accesses can be virtualized.

A virtual-machine monitor can virtualize these MSR-based APIC accesses by configuring the MSR bitmaps (see Section 25.6.9) to ensure that the accesses cause VM exits (see Section 26.1.3). Alternatively, there are methods for virtualizing some MSR-based APIC accesses without VM exits.

Normally, an execution of RDMSR or WRMSR that does not fault or cause a VM exit accesses the MSR indicated in ECX. However, such an execution treats some values of ECX in the range 800H–8FFH specially if the "virtualize x2APIC mode" VM-execution control is 1. The following items provide details:

- **RDMSR.** The instruction's behavior depends on the setting of the "APIC-register virtualization" VM-execution control.
  - If the "APIC-register virtualization" VM-execution control is 0, behavior depends upon the value of ECX.
    - If ECX contains 808H (indicating the TPR MSR), the instruction reads the 8 bytes from offset 080H on the virtual-APIC page (VTPR and the 4 bytes above it) into EDX:EAX. This occurs even if the local APIC is not in x2APIC mode (no general-protection fault occurs because the local APIC is not x2APIC mode).
    - If ECX contains any other value in the range 800H–8FFH, the instruction operates normally. If the local APIC is in x2APIC mode and ECX indicates a readable APIC register, EDX and EAX are loaded with the value of that register. If the local APIC is not in x2APIC mode or ECX does not indicate a readable APIC register, a general-protection fault occurs.
  - If "APIC-register virtualization" is 1 and ECX contains a value in the range 800H–8FFH, the instruction reads the 8 bytes from offset X on the virtual-APIC page into EDX:EAX, where X = (ECX & FFH) « 4. This occurs even if the local APIC is not in x2APIC mode (no general-protection fault occurs because the local APIC is not in x2APIC mode).
- **WRMSR.** The instruction's behavior depends on the value of ECX and the setting of the "virtual-interrupt delivery" and "IPI virtualization" VM-execution controls.

  Special processing applies in the following cases: (1) ECX contains 808H (indicating the TPR MSR); (2) ECX contains 80BH (indicating the EOI MSR) and the "virtual-interrupt delivery" VM-execution control is 1; (3) ECX contains 83FH (indicating the self-IPI MSR) and the "virtual-interrupt delivery" VM-execution control is 1; and (4) ECX contains 830H (indicating the ICR MSR) and the "IPI virtualization" VM-execution control is 1.

  If special processing applies, no general-protection exception is produced due to the fact that the local APIC is in xAPIC mode. However, WRMSR does perform the normal reserved-bit checking:

  - If ECX contains 808H or 83FH, a general-protection fault occurs if either EDX or EAX[31:8] is non-zero.
  - If ECX contains 80BH, a general-protection fault occurs if either EDX or EAX is non-zero.
  - If ECX contains 830H, a general-protection fault occurs if any of bits 31:20, 17:16, or 13 of EAX is non-zero.

  If there is no fault, WRMSR stores EDX:EAX at offset X on the virtual-APIC page, where X = (ECX & FFH) « 4. Following this, the processor performs an operation depending on the value of ECX:

  - If ECX contains 808H, the processor performs TPR virtualization (see Section 30.1.2).
  - If ECX contains 80BH, the processor performs EOI virtualization (see Section 30.1.4).
  - If ECX contains 83FH, the processor then checks the value of EAX[7:4] and proceeds as follows:

- If the value is non-zero, the logical processor performs self-IPI virtualization with the 8-bit vector in EAX[7:0] (see Section 30.1.5).
- If the value is zero, the logical processor causes an APIC-write VM exit as if there had been a write access to page offset 3F0H on the APIC-access page (see Section 30.4.3.3).

— If ECX contains 830H, the processor then checks the value of VICR to determine whether the following are all true:

- Bits 19:18 (destination shorthand) are 00B (no shorthand).
- Bit 15 (trigger mode) is 0 (edge).
- Bit 12 (unused) is 0.
- Bit 11 (destination mode) is 0 (physical).
- Bits 10:8 (delivery mode) are 000B (fixed).

If all of the items above are true, the processor performs IPI virtualization using the 8-bit vector in byte 0 of VICR and the 32-bit APIC ID in VICR[63:32] (see Section 30.1.6). Otherwise, the logical processor causes an APIC-write VM exit (see Section 30.4.3.3).

If special processing does not apply, the instruction operates normally. If the local APIC is in x2APIC mode and ECX indicates a writable APIC register, the value in EDX:EAX is written to that register. If the local APIC is not in x2APIC mode or ECX does not indicate a writable APIC register, a general-protection fault occurs.

30.6 POSTED-INTERRUPT PROCESSING

Posted-interrupt processing is a feature by which a processor processes the virtual interrupts by recording them as pending on the virtual-APIC page.

Posted-interrupt processing is enabled by setting the "process posted interrupts" VM-execution control. The processing is performed in response to the arrival of an interrupt with the **posted-interrupt notification vector**. In response to such an interrupt, the processor processes virtual interrupts recorded in a data structure called a **posted-interrupt descriptor**. The posted-interrupt notification vector and the address of the posted-interrupt descriptor are fields in the VMCS; see Section 25.6.8.

If the "process posted interrupts" VM-execution control is 1, a logical processor uses a 64-byte posted-interrupt descriptor located at the posted-interrupt descriptor address. The posted-interrupt descriptor has the following format:

Table 30-1. Format of Posted-Interrupt Descriptor

Bit Position(s)	Name	Description
255:0	Posted-interrupt requests	One bit for each interrupt vector. There is a posted-interrupt request for a vector if the corresponding bit is 1.
256	Outstanding notification	If this bit is set, there is a notification outstanding for one or more posted interrupts in bits 255:0.
511:257	Reserved for software and other agents	These bits may be used by software and by other agents in the system (e.g., chipset). The processor does not modify these bits.

The notation **PIR** (posted-interrupt requests) refers to the 256 posted-interrupt bits in the posted-interrupt descriptor.

Use of the posted-interrupt descriptor differs from that of other data structures that are referenced by pointers in a VMCS. There is a general requirement that software ensure that each such data structure is modified only when no logical processor with a current VMCS that references it is in VMX non-root operation. That requirement does not apply to the posted-interrupt descriptor. There is a requirement, however, that such modifications be done using locked read-modify-write instructions.

If the "external-interrupt exiting" VM-execution control is 1, any unmasked external interrupt causes a VM exit (see Section 26.2). If the "process posted interrupts" VM-execution control is also 1, this behavior is changed and the processor handles an external interrupt as follows:[1]

1. The local APIC is acknowledged; this provides the processor core with an interrupt vector, called here the **physical vector**.
2. If the physical vector equals the posted-interrupt notification vector, the logical processor continues to the next step. Otherwise, a VM exit occurs as it would normally due to an external interrupt; the vector is saved in the VM-exit interruption-information field.
3. The processor clears the outstanding-notification bit in the posted-interrupt descriptor. This is done atomically so as to leave the remainder of the descriptor unmodified (e.g., with a locked AND operation).
4. The processor writes zero to the EOI register in the local APIC; this dismisses the interrupt with the posted-interrupt notification vector from the local APIC.
5. The logical processor performs a logical-OR of PIR into VIRR and clears PIR. No other agent can read or write a PIR bit (or group of bits) between the time it is read (to determine what to OR into VIRR) and when it is cleared.
6. The logical processor sets RVI to be the maximum of the old value of RVI and the highest index of all bits that were set in PIR; if no bit was set in PIR, RVI is left unmodified.
7. The logical processor evaluates pending virtual interrupts as described in Section 30.2.1.

The logical processor performs the steps above in an uninterruptible manner. If step #7 leads to recognition of a virtual interrupt, the processor may deliver that interrupt immediately.

Steps #1 to #7 above occur when the interrupt controller delivers an unmasked external interrupt to the CPU core. The following items consider certain cases of interrupt delivery:

- Interrupt delivery can occur between iterations of a REP-prefixed instruction (after at least one iteration has completed but before all iterations have completed). If this occurs, the following items characterize processor state after posted-interrupt processing completes and before guest execution resumes:
  - RIP references the REP-prefixed instruction;
  - RCX, RSI, and RDI are updated to reflect the iterations completed; and
  - RFLAGS.RF = 1.
- Interrupt delivery can occur when the logical processor is in the active, HLT, or MWAIT states. If the logical processor had been in the active or MWAIT state before the arrival of the interrupt, it is in the active state following completion of step #7; if it had been in the HLT state, it returns to the HLT state after step #7 (if a pending virtual interrupt was recognized, the logical processor may immediately wake from the HLT state).
- Interrupt delivery can occur while the logical processor is in enclave mode. If the logical processor had been in enclave mode before the arrival of the interrupt, an Asynchronous Enclave Exit (AEX) may occur before the steps #1 to #7 (see Chapter 37, "Enclave Exiting Events"). If no AEX occurs before step #1 and a VM exit occurs at step #2, an AEX occurs before the VM exit is delivered.

30.7 VIRTUALIZING SENDUIPI

The user-interrupt feature includes the SENDUIPI instruction that software operating with CPL = 3 can use to send user interrupts to another software thread ("user IPIs"). The SENDUIPI instruction has the following high-level operation:

```
read selected entry from user-interrupt target table;
use address in entry to read the referenced user posted-interrupt descriptor (UPID);
update certain fields in UPID;
if necessary, send ordinary IPI indicated in UPID's notification information;
```

1. VM entry ensures that the "process posted interrupts" VM-execution control is 1 only if the "external-interrupt exiting" VM-execution control is also 1. SeeSection 27.2.1.1.

The last step uses two fields in the UPID: an 8-bit notification vector (UPID.NV) and a 32-bit notification destination (an APIC ID, UPID.NDST). Outside of VMX non-root operation, the processor implements the last step as follows:

- If the local APIC is in xAPIC mode, it writes UPID.NDST[15:8] to ICR_HI[31:24] (offset 310H from IA32_APIC_BASE) and then writes UPID.NV to ICR_LO (offset 300H).
- If the local APIC is in x2APIC mode, it performs the control-register write that would be done by an execution of WRMSR with ECX = 310H (ICR), EAX = UPID.NV, and EDX = UPID.NDST.

In VMX non-root operation, implementation of the step depends on the settings of the "use TPR shadow," "virtualize APIC accesses," and "IPI virtualization" VM-execution controls:[1]

1. If the "use TPR shadow" VM-execution control is 0, the behavior is not modified: the logical processor sends the specified IPI by writing to the local APIC's ICR as specified above (based on the current mode of the local APIC).
2. If the "use TPR shadow" VM-execution control is 1 and the "virtualize APIC accesses" VM-execution control is 0, the logical processor virtualizes the sending of an x2APIC-mode IPI with the following steps:
   a. The 64-bit value Z is written to offset 300H on the virtual-APIC page (VICR), where Z[7:0] = UPID.NV (the 8-bit virtual vector), Z[63:32] = UPID.NDST (the 32-bit virtual APIC ID) and Z[31:8] = 000000H (indicating a physically addressed fixed-mode IPI).
   b. If the "IPI virtualization" VM-execution control is 1, IPI virtualization (Section 30.1.6) is performed using the vector UPID.NV and the 32-bit virtual APIC ID UPID.NDST.
3. If the "use TPR shadow" and "virtualize APIC accesses" VM-execution controls are both 1, the logical processor virtualizes the sending of an xAPIC-mode IPI by performing the following steps:
   a. The 32-bit value X is written to offset 310H on the virtual-APIC page (VICR_HI), where X[31:24] = UPID.NDST[15:8] (the 8-bit virtual APIC ID) and X[23:0] = 000000H.[2]
   b. The 32-bit value Y is written to offset 300H on the virtual-APIC page (VICR_LO), where Y[7:0] = UPID.NV (the 8-bit virtual vector) and Y[31:8] = 000000H (indicating a physically addressed fixed-mode IPI).
   c. If the "IPI virtualization" VM-execution control is 1, IPI virtualization is performed using the vector UPID.NV and the APIC ID UPID.NDST[15:8]. IPI virtualization will use only the 8-bit APIC ID from bits 15:8 of the UPID's destination field (the 8-bit value written earlier to bits 31:24 of VICR_HI).
4. If the "use TPR shadow" VM-execution control is 1 and the "IPI virtualization" VM-execution control is 0, an APIC-write VM exit occurs as if there had been a write access to page offset 300H on the APIC-access page (see Section 30.4.3.3).

1. The setting of the "virtualize x2APIC mode" VM-execution control does not affect this operation.
2. For xAPIC mode (which is virtualized if the "virtualize APIC accesses" VM-execution control is 1), the destination APIC ID is in byte 1 (**not** byte 0) of the UPID's 4-byte NDST field.

CHAPTER 31
VMX INSTRUCTION REFERENCE

NOTE

This chapter was previously located in the *Intel® 64 and IA-32 Architectures Software Developer's Manual, Volume 2B* as chapter 5.

31.1 OVERVIEW

This chapter describes the virtual-machine extensions (VMX) for the Intel 64 and IA-32 architectures. VMX is intended to support virtualization of processor hardware and a system software layer acting as a host to multiple guest software environments. The virtual-machine extensions (VMX) includes five instructions that manage the virtual-machine control structure (VMCS), four instructions that manage VMX operation, two TLB-management instructions, and two instructions for use by guest software. Additional details of VMX are described in Chapter 24 through Chapter 30.

The behavior of the VMCS-maintenance instructions is summarized below:

- **VMPTRLD —** This instruction takes a single 64-bit source operand that is in memory. It makes the referenced VMCS active and current, loading the current-VMCS pointer with this operand and establishes the current VMCS based on the contents of VMCS-data area in the referenced VMCS region. Because this makes the referenced VMCS active, a logical processor may start maintaining on the processor some of the VMCS data for the VMCS.
- **VMPTRST —** This instruction takes a single 64-bit destination operand that is in memory. The current-VMCS pointer is stored into the destination operand.
- **VMCLEAR —** This instruction takes a single 64-bit operand that is in memory. The instruction sets the launch state of the VMCS referenced by the operand to "clear", renders that VMCS inactive, and ensures that data for the VMCS have been written to the VMCS-data area in the referenced VMCS region. If the operand is the same as the current-VMCS pointer, that pointer is made invalid.
- **VMREAD —** This instruction reads a component from a VMCS (the encoding of that field is given in a register operand) and stores it into a destination operand that may be a register or in memory.
- **VMWRITE —** This instruction writes a component to a VMCS (the encoding of that field is given in a register operand) from a source operand that may be a register or in memory.

The behavior of the VMX management instructions is summarized below:

- **VMLAUNCH —** This instruction launches a virtual machine managed by the VMCS. A VM entry occurs, transferring control to the VM.
- **VMRESUME —** This instruction resumes a virtual machine managed by the VMCS. A VM entry occurs, transferring control to the VM.
- **VMXOFF —** This instruction causes the processor to leave VMX operation.
- **VMXON —** This instruction takes a single 64-bit source operand that is in memory. It causes a logical processor to enter VMX root operation and to use the memory referenced by the operand to support VMX operation.

The behavior of the VMX-specific TLB-management instructions is summarized below:

- **INVEPT —** This instruction invalidates entries in the TLBs and paging-structure caches that were derived from extended page tables (EPT).
- **INVVPID —** This instruction invalidates entries in the TLBs and paging-structure caches based on a Virtual-Processor Identifier (VPID).

None of the instructions above can be executed in compatibility mode; they generate invalid-opcode exceptions if executed in compatibility mode.

The behavior of the guest-available instructions is summarized below:

- **VMCALL —** This instruction allows software in VMX non-root operation to call the VMM for service. A VM exit occurs, transferring control to the VMM.

- **VMFUNC —** This instruction allows software in VMX non-root operation to invoke a VM function (processor functionality enabled and configured by software in VMX root operation) without a VM exit.

31.2 CONVENTIONS

The operation sections for the VMX instructions in Section 31.3 use the pseudo-function VMexit, which indicates that the logical processor performs a VM exit.

The operation sections also use the pseudo-functions VMsucceed, VMfail, VMfailInvalid, and VMfailValid. These pseudo-functions signal instruction success or failure by setting or clearing bits in RFLAGS and, in some cases, by writing the VM-instruction error field. The following pseudocode fragments detail these functions:

```
VMsucceed:
    CF := 0;
    PF := 0;
    AF := 0;
    ZF := 0;
    SF := 0;
    OF := 0;

VMfail(ErrorNumber):
    IF VMCS pointer is valid
        THEN VMfailValid(ErrorNumber);
        ELSE VMfailInvalid;
    FI;

VMfailInvalid:
    CF := 1;
    PF := 0;
    AF := 0;
    ZF := 0;
    SF := 0;
    OF := 0;

VMfailValid(ErrorNumber):// executed only if there is a current VMCS
    CF := 0;
    PF := 0;
    AF := 0;
    ZF := 1;
    SF := 0;
    OF := 0;
    Set the VM-instruction error field to ErrorNumber;
```

The different VM-instruction error numbers are enumerated in Section 31.4, "VM Instruction Error Numbers".

31.3 VMX INSTRUCTIONS

This section provides detailed descriptions of the VMX instructions.

INVEPT— Invalidate Translations Derived from EPT

Opcode/ Instruction	Op/En	Description
66 0F 38 80 INVEPT r64, m128	RM	Invalidates EPT-derived entries in the TLBs and paging-structure caches (in 64-bit mode).
66 0F 38 80 INVEPT r32, m128	RM	Invalidates EPT-derived entries in the TLBs and paging-structure caches (outside 64-bit mode).

Instruction Operand Encoding

Op/En	Operand 1	Operand 2	Operand 3	Operand 4
RM	ModRM:reg (r)	ModRM:r/m (r)	NA	NA

Description

Invalidates mappings in the translation lookaside buffers (TLBs) and paging-structure caches that were derived from extended page tables (EPT). (See Chapter 29, "VMX Support for Address Translation".) Invalidation is based on the **INVEPT type** specified in the register operand and the **INVEPT descriptor** specified in the memory operand.

Outside IA-32e mode, the register operand is always 32 bits, regardless of the value of CS.D; in 64-bit mode, the register operand has 64 bits (the instruction cannot be executed in compatibility mode).

The INVEPT types supported by a logical processors are reported in the IA32_VMX_EPT_VPID_CAP MSR (see Appendix A, "VMX Capability Reporting Facility"). There are two INVEPT types currently defined:

- Single-context invalidation. If the INVEPT type is 1, the logical processor invalidates all mappings associated with bits 51:12 of the EPT pointer (EPTP) specified in the INVEPT descriptor. It may invalidate other mappings as well.
- Global invalidation: If the INVEPT type is 2, the logical processor invalidates mappings associated with all EPTPs.

If an unsupported INVEPT type is specified, the instruction fails.

INVEPT invalidates all the specified mappings for the indicated EPTP(s) regardless of the VPID and PCID values with which those mappings may be associated.

The INVEPT descriptor comprises 128 bits and contains a 64-bit EPTP value in bits 63:0 (see Figure 31-1).

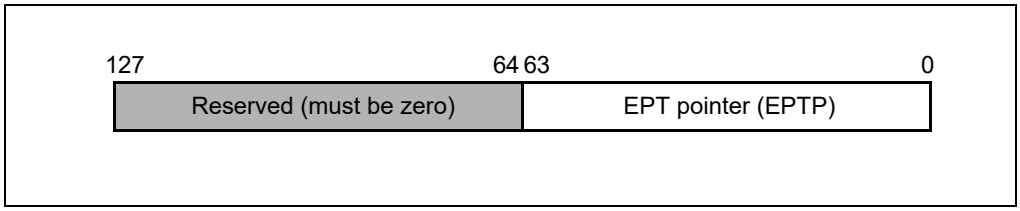

Figure 31-1. INVEPT Descriptor

Operation

```
IF (not in VMX operation) or (CR0.PE = 0) or (RFLAGS.VM = 1) or (IA32_EFER.LMA = 1 and CS.L = 0)
    THEN #UD;
ELSIF in VMX non-root operation
    THEN VM exit;
ELSIF CPL > 0
    THEN #GP(0);
    ELSE
```

```
        INVEPT_TYPE := value of register operand;
        IF IA32_VMX_EPT_VPID_CAP MSR indicates that processor does not support INVEPT_TYPE
            THEN VMfail(Invalid operand to INVEPT/INVVPID);
            ELSE    // INVEPT_TYPE must be 1 or 2
                INVEPT_DESC := value of memory operand;
                EPTP  := INVEPT_DESC[63:0];
                CASE INVEPT_TYPE OF
                    1:                  // single-context invalidation
                        IF VM entry with the "enable EPT" VM execution control set to 1
                        would fail due to the EPTP value
                            THEN VMfail(Invalid operand to INVEPT/INVVPID);
                            ELSE
                                Invalidate mappings associated with EPTP[51:12];
                                VMsucceed;
                        FI;
                        BREAK;
                    2:                  // global invalidation
                        Invalidate mappings associated with all EPTPs;
                        VMsucceed;
                        BREAK;
                ESAC;
        FI;
FI;
```

Flags Affected

See the operation section and Section 31.2.

Protected Mode Exceptions

#GP(0)	If the current privilege level is not 0.
	If the memory operand effective address is outside the CS, DS, ES, FS, or GS segment limit.
	If the DS, ES, FS, or GS register contains an unusable segment.
	If the source operand is located in an execute-only code segment.
#PF(fault-code)	If a page fault occurs in accessing the memory operand.
#SS(0)	If the memory operand effective address is outside the SS segment limit.
	If the SS register contains an unusable segment.
#UD	If not in VMX operation.
	If the logical processor does not support EPT (IA32_VMX_PROCBASED_CTLS2[33]=0).
	If the logical processor supports EPT (IA32_VMX_PROCBASED_CTLS2[33]=1) but does not support the INVEPT instruction (IA32_VMX_EPT_VPID_CAP[20]=0).

Real-Address Mode Exceptions

#UD	The INVEPT instruction is not recognized in real-address mode.

Virtual-8086 Mode Exceptions

#UD	The INVEPT instruction is not recognized in virtual-8086 mode.

Compatibility Mode Exceptions

#UD	The INVEPT instruction is not recognized in compatibility mode.

64-Bit Mode Exceptions

#GP(0)	If the current privilege level is not 0.
	If the memory operand is in the CS, DS, ES, FS, or GS segments and the memory address is in a non-canonical form.
#PF(fault-code)	If a page fault occurs in accessing the memory operand.
#SS(0)	If the memory operand is in the SS segment and the memory address is in a non-canonical form.
#UD	If not in VMX operation.
	If the logical processor does not support EPT (IA32_VMX_PROCBASED_CTLS2[33]=0).
	If the logical processor supports EPT (IA32_VMX_PROCBASED_CTLS2[33]=1) but does not support the INVEPT instruction (IA32_VMX_EPT_VPID_CAP[20]=0).

INVVPID— Invalidate Translations Based on VPID

Opcode/ Instruction	Op/En	Description
66 0F 38 81 INVVPID r64, m128	RM	Invalidates entries in the TLBs and paging-structure caches based on VPID (in 64-bit mode).
66 0F 38 81 INVVPID r32, m128	RM	Invalidates entries in the TLBs and paging-structure caches based on VPID (outside 64-bit mode).

Instruction Operand Encoding

Op/En	Operand 1	Operand 2	Operand 3	Operand 4
RM	ModRM:reg (r)	ModRM:r/m (r)	NA	NA

Description

Invalidates mappings in the translation lookaside buffers (TLBs) and paging-structure caches based on **virtual-processor identifier** (VPID). (See Chapter 29, "VMX Support for Address Translation".) Invalidation is based on the **INVVPID type** specified in the register operand and the **INVVPID descriptor** specified in the memory operand.

Outside IA-32e mode, the register operand is always 32 bits, regardless of the value of CS.D; in 64-bit mode, the register operand has 64 bits (the instruction cannot be executed in compatibility mode).

The INVVPID types supported by a logical processors are reported in the IA32_VMX_EPT_VPID_CAP MSR (see Appendix A, "VMX Capability Reporting Facility"). There are four INVVPID types currently defined:

- Individual-address invalidation: If the INVVPID type is 0, the logical processor invalidates mappings for the linear address and VPID specified in the INVVPID descriptor. In some cases, it may invalidate mappings for other linear addresses (or other VPIDs) as well.
- Single-context invalidation: If the INVVPID type is 1, the logical processor invalidates all mappings tagged with the VPID specified in the INVVPID descriptor. In some cases, it may invalidate mappings for other VPIDs as well.
- All-contexts invalidation: If the INVVPID type is 2, the logical processor invalidates all mappings tagged with all VPIDs except VPID 0000H. In some cases, it may invalidate translations with VPID 0000H as well.
- Single-context invalidation, retaining global translations: If the INVVPID type is 3, the logical processor invalidates all mappings tagged with the VPID specified in the INVVPID descriptor except global translations. In some cases, it may invalidate global translations (and mappings with other VPIDs) as well. See the "Caching Translation Information" section in Chapter 4 of the *IA-32 Intel Architecture Software Developer's Manual, Volumes 3A* for information about global translations.

If an unsupported INVVPID type is specified, the instruction fails.

INVVPID invalidates all the specified mappings for the indicated VPID(s) regardless of the EPTP and PCID values with which those mappings may be associated.

The INVVPID descriptor comprises 128 bits and consists of a VPID and a linear address as shown in Figure 31-2.

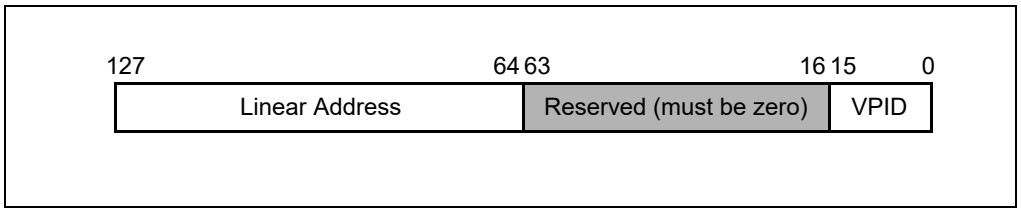

Figure 31-2. INVVPID Descriptor

Operation

```
IF (not in VMX operation) or (CR0.PE = 0) or (RFLAGS.VM = 1) or (IA32_EFER.LMA = 1 and CS.L = 0)
    THEN #UD;
ELSIF in VMX non-root operation
    THEN VM exit;
ELSIF CPL > 0
    THEN #GP(0);
    ELSE
        INVVPID_TYPE := value of register operand;
        IF IA32_VMX_EPT_VPID_CAP MSR indicates that processor does not support
        INVVPID_TYPE
            THEN VMfail(Invalid operand to INVEPT/INVVPID);
            ELSE            // INVVPID_TYPE must be in the range 0–3
                INVVPID_DESC := value of memory operand;
                IF INVVPID_DESC[63:16] ≠ 0
                    THEN VMfail(Invalid operand to INVEPT/INVVPID);
                    ELSE
                        CASE INVVPID_TYPE OF
                            0:                  // individual-address invalidation
                                VPID  := INVVPID_DESC[15:0];
                                IF VPID = 0
                                    THEN VMfail(Invalid operand to INVEPT/INVVPID);
                                    ELSE
                                        GL_ADDR  := INVVPID_DESC[127:64];
                                        IF (GL_ADDR is not in a canonical form)
                                            THEN
                                                VMfail(Invalid operand to INVEPT/INVVPID);
                                            ELSE
                                                Invalidate mappings for GL_ADDR tagged with VPID;
                                                VMsucceed;
                                        FI;
                                FI;
                                BREAK;
                            1:                  // single-context invalidation
                                VPID  := INVVPID_DESC[15:0];
                                IF VPID = 0
                                    THEN VMfail(Invalid operand to INVEPT/INVVPID);
                                    ELSE
                                        Invalidate all mappings tagged with VPID;
                                        VMsucceed;
                                FI;
                                BREAK;
                            2:                  // all-context invalidation
                                Invalidate all mappings tagged with all non-zero VPIDs;
                                VMsucceed;
                                BREAK;
                            3:                  // single-context invalidation retaining globals
                                VPID  := INVVPID_DESC[15:0];
                                IF VPID = 0
                                    THEN VMfail(Invalid operand to INVEPT/INVVPID);
                                    ELSE
                                        Invalidate all mappings tagged with VPID except global translations;
                                        VMsucceed;
```

```
                        FI;
                        BREAK;
                ESAC;
        FI;
    FI;
FI;
```

Flags Affected

See the operation section and Section 31.2.

Protected Mode Exceptions

#GP(0)	If the current privilege level is not 0.
	If the memory operand effective address is outside the CS, DS, ES, FS, or GS segment limit.
	If the DS, ES, FS, or GS register contains an unusable segment.
	If the source operand is located in an execute-only code segment.
#PF(fault-code)	If a page fault occurs in accessing the memory operand.
#SS(0)	If the memory operand effective address is outside the SS segment limit.
	If the SS register contains an unusable segment.
#UD	If not in VMX operation.
	If the logical processor does not support VPIDs (IA32_VMX_PROCBASED_CTLS2[37]=0).
	If the logical processor supports VPIDs (IA32_VMX_PROCBASED_CTLS2[37]=1) but does not support the INVVPID instruction (IA32_VMX_EPT_VPID_CAP[32]=0).

Real-Address Mode Exceptions

#UD	The INVVPID instruction is not recognized in real-address mode.

Virtual-8086 Mode Exceptions

#UD	The INVVPID instruction is not recognized in virtual-8086 mode.

Compatibility Mode Exceptions

#UD	The INVVPID instruction is not recognized in compatibility mode.

64-Bit Mode Exceptions

#GP(0)	If the current privilege level is not 0.
	If the memory operand is in the CS, DS, ES, FS, or GS segments and the memory address is in a non-canonical form.
#PF(fault-code)	If a page fault occurs in accessing the memory operand.
#SS(0)	If the memory destination operand is in the SS segment and the memory address is in a non-canonical form.
#UD	If not in VMX operation.
	If the logical processor does not support VPIDs (IA32_VMX_PROCBASED_CTLS2[37]=0).
	If the logical processor supports VPIDs (IA32_VMX_PROCBASED_CTLS2[37]=1) but does not support the INVVPID instruction (IA32_VMX_EPT_VPID_CAP[32]=0).

VMCALL—Call to VM Monitor

Opcode/ Instruction	Op/En	Description
0F 01 C1 VMCALL	ZO	Call to VM monitor by causing VM exit.

Instruction Operand Encoding

Op/En	Operand 1	Operand 2	Operand 3	Operand 4
ZO	NA	NA	NA	NA

Description

This instruction allows guest software can make a call for service into an underlying VM monitor. The details of the programming interface for such calls are VMM-specific; this instruction does nothing more than cause a VM exit, registering the appropriate exit reason.

Use of this instruction in VMX root operation invokes an SMM monitor (see Section 32.15.2). This invocation will activate the dual-monitor treatment of system-management interrupts (SMIs) and system-management mode (SMM) if it is not already active (see Section 32.15.6).

Operation

```
IF not in VMX operation
    THEN #UD;
ELSIF in VMX non-root operation
    THEN VM exit;
ELSIF (RFLAGS.VM = 1) or (IA32_EFER.LMA = 1 and CS.L = 0)
    THEN #UD;
ELSIF CPL > 0
    THEN #GP(0);
ELSIF in SMM or the logical processor does not support the dual-monitor treatment of SMIs and SMM or the valid bit in the
IA32_SMM_MONITOR_CTL MSR is clear
    THEN VMfail (VMCALL executed in VMX root operation);
ELSIF dual-monitor treatment of SMIs and SMM is active
    THEN perform an SMM VM exit (see Section 32.15.2);
ELSIF current-VMCS pointer is not valid
    THEN VMfailInvalid;
ELSIF launch state of current VMCS is not clear
    THEN VMfailValid(VMCALL with non-clear VMCS);
ELSIF VM-exit control fields are not valid (see Section 32.15.6.1)
    THEN VMfailValid (VMCALL with invalid VM-exit control fields);
ELSE
    enter SMM;
    read revision identifier in MSEG;
    IF revision identifier does not match that supported by processor
        THEN
            leave SMM;
            VMfailValid(VMCALL with incorrect MSEG revision identifier);
        ELSE
            read SMM-monitor features field in MSEG (see Section 32.15.6.1);
            IF features field is invalid
                THEN
                    leave SMM;
```

```
                    VMfailValid(VMCALL with invalid SMM-monitor features);
                ELSE activate dual-monitor treatment of SMIs and SMM (see Section 32.15.6);
            FI;
        FI;
FI;
```

Flags Affected

See the operation section and Section 31.2.

Protected Mode Exceptions

#GP(0)	If the current privilege level is not 0 and the logical processor is in VMX root operation.
#UD	If executed outside VMX operation.

Real-Address Mode Exceptions

#UD	If executed outside VMX operation.

Virtual-8086 Mode Exceptions

#UD	If executed outside VMX non-root operation.

Compatibility Mode Exceptions

#UD	If executed outside VMX non-root operation.

64-Bit Mode Exceptions

#UD	If executed outside VMX operation.

VMCLEAR—Clear Virtual-Machine Control Structure

Opcode/ Instruction	Op/En	Description
66 0F C7 /6 VMCLEAR m64	M	Copy VMCS data to VMCS region in memory.

Instruction Operand Encoding

Op/En	Operand 1	Operand 2	Operand 3	Operand 4
M	ModRM:r/m (r)	NA	NA	NA

Description

This instruction applies to the VMCS whose VMCS region resides at the physical address contained in the instruction operand. The instruction ensures that VMCS data for that VMCS (some of these data may be currently maintained on the processor) are copied to the VMCS region in memory. It also initializes parts of the VMCS region (for example, it sets the launch state of that VMCS to clear). See Chapter 25, "Virtual-Machine Control Structures".

The operand of this instruction is always 64 bits and is always in memory. If the operand is the current-VMCS pointer, then that pointer is made invalid (set to FFFFFFFF_FFFFFFFFH).

Note that the VMCLEAR instruction might not explicitly write any VMCS data to memory; the data may be already resident in memory before the VMCLEAR is executed.

Operation

```
IF (register operand) or (not in VMX operation) or (CR0.PE = 0) or (RFLAGS.VM = 1) or (IA32_EFER.LMA = 1 and CS.L = 0)
    THEN #UD;
ELSIF in VMX non-root operation
    THEN VM exit;
ELSIF CPL > 0
    THEN #GP(0);
    ELSE
        addr := contents of 64-bit in-memory operand;
        IF addr is not 4KB-aligned OR
        addr sets any bits beyond the physical-address width[1]
            THEN VMfail(VMCLEAR with invalid physical address);
        ELSIF addr = VMXON pointer
            THEN VMfail(VMCLEAR with VMXON pointer);
            ELSE
                ensure that data for VMCS referenced by the operand is in memory;
                initialize implementation-specific data in VMCS region;
                launch state of VMCS referenced by the operand := "clear"
                IF operand addr = current-VMCS pointer
                    THEN current-VMCS pointer := FFFFFFFF_FFFFFFFFH;
                FI;
                VMsucceed;
        FI;
FI;
```

Flags Affected

See the operation section and Section 31.2.

1. If IA32_VMX_BASIC[48] is read as 1, VMfail occurs if addr sets any bits in the range 63:32; see Appendix A.1.

Protected Mode Exceptions

#GP(0)	If the current privilege level is not 0.
	If the memory operand effective address is outside the CS, DS, ES, FS, or GS segment limit.
	If the DS, ES, FS, or GS register contains an unusable segment.
	If the operand is located in an execute-only code segment.
#PF(fault-code)	If a page fault occurs in accessing the memory operand.
#SS(0)	If the memory operand effective address is outside the SS segment limit.
	If the SS register contains an unusable segment.
#UD	If operand is a register.
	If not in VMX operation.

Real-Address Mode Exceptions

#UD	The VMCLEAR instruction is not recognized in real-address mode.

Virtual-8086 Mode Exceptions

#UD	The VMCLEAR instruction is not recognized in virtual-8086 mode.

Compatibility Mode Exceptions

#UD	The VMCLEAR instruction is not recognized in compatibility mode.

64-Bit Mode Exceptions

#GP(0)	If the current privilege level is not 0.
	If the source operand is in the CS, DS, ES, FS, or GS segments and the memory address is in a non-canonical form.
#PF(fault-code)	If a page fault occurs in accessing the memory operand.
#SS(0)	If the source operand is in the SS segment and the memory address is in a non-canonical form.
#UD	If operand is a register.
	If not in VMX operation.

VMFUNC—Invoke VM function

Opcode/ Instruction	Op/En	Description
NP 0F 01 D4 VMFUNC	ZO	Invoke VM function specified in EAX.

Instruction Operand Encoding

Op/En	Operand 1	Operand 2	Operand 3	Operand 4
ZO	NA	NA	NA	NA

Description

This instruction allows software in VMX non-root operation to invoke a VM function, which is processor functionality enabled and configured by software in VMX root operation. The value of EAX selects the specific VM function being invoked.

The behavior of each VM function (including any additional fault checking) is specified in Section 26.5.6, "VM Functions".

Operation

Perform functionality of the VM function specified in EAX;

Flags Affected

Depends on the VM function specified in EAX. See Section 26.5.6, "VM Functions".

Protected Mode Exceptions (not including those defined by specific VM functions)

#UD	If executed outside VMX non-root operation.
	If "enable VM functions" VM-execution control is 0.
	If EAX ≥ 64.

Real-Address Mode Exceptions

Same exceptions as in protected mode.

Virtual-8086 Exceptions

Same exceptions as in protected mode.

Compatibility Mode Exceptions

Same exceptions as in protected mode.

64-Bit Mode Exceptions

Same exceptions as in protected mode.

VMLAUNCH/VMRESUME—Launch/Resume Virtual Machine

Opcode/ Instruction	Op/En	Description
0F 01 C2 VMLAUNCH	ZO	Launch virtual machine managed by current VMCS.
0F 01 C3 VMRESUME	ZO	Resume virtual machine managed by current VMCS.

Instruction Operand Encoding

Op/En	Operand 1	Operand 2	Operand 3	Operand 4
ZO	NA	NA	NA	NA

Description

Effects a VM entry managed by the current VMCS.

- VMLAUNCH fails if the launch state of current VMCS is not "clear". If the instruction is successful, it sets the launch state to "launched."
- VMRESUME fails if the launch state of the current VMCS is not "launched."

If VM entry is attempted, the logical processor performs a series of consistency checks as detailed in Chapter 27, "VM Entries". Failure to pass checks on the VMX controls or on the host-state area passes control to the instruction following the VMLAUNCH or VMRESUME instruction. If these pass but checks on the guest-state area fail, the logical processor loads state from the host-state area of the VMCS, passing control to the instruction referenced by the RIP field in the host-state area.

VM entry is not allowed when events are blocked by MOV SS or POP SS. Neither VMLAUNCH nor VMRESUME should be used immediately after either MOV to SS or POP to SS.

Operation

```
IF (not in VMX operation) or (CR0.PE = 0) or (RFLAGS.VM = 1) or (IA32_EFER.LMA = 1 and CS.L = 0)
    THEN #UD;
ELSIF in VMX non-root operation
    THEN VMexit;
ELSIF CPL > 0
    THEN #GP(0);
ELSIF current-VMCS pointer is not valid
    THEN VMfailInvalid;
ELSIF events are being blocked by MOV SS
    THEN VMfailValid(VM entry with events blocked by MOV SS);
ELSIF (VMLAUNCH and launch state of current VMCS is not "clear")
    THEN VMfailValid(VMLAUNCH with non-clear VMCS);
ELSIF (VMRESUME and launch state of current VMCS is not "launched")
    THEN VMfailValid(VMRESUME with non-launched VMCS);
    ELSE
        Check settings of VMX controls and host-state area;
        IF invalid settings
            THEN VMfailValid(VM entry with invalid VMX-control field(s)) or
                    VMfailValid(VM entry with invalid host-state field(s)) or
                    VMfailValid(VM entry with invalid executive-VMCS pointer)) or
                    VMfailValid(VM entry with non-launched executive VMCS) or
                    VMfailValid(VM entry with executive-VMCS pointer not VMXON pointer) or
```

```
                VMfailValid(VM entry with invalid VM-execution control fields in executive
                VMCS)
                as appropriate;
        ELSE
            Attempt to load guest state and PDPTRs as appropriate;
            clear address-range monitoring;
            IF failure in checking guest state or PDPTRs
                THEN VM entry fails (see Section 27.8);
                ELSE
                    Attempt to load MSRs from VM-entry MSR-load area;
                    IF failure
                        THEN VM entry fails
                        (see Section 27.8);
                        ELSE
                            IF VMLAUNCH
                                THEN launch state of VMCS := "launched";
                            FI;
                            IF in SMM and "entry to SMM" VM-entry control is 0
                                THEN
                                    IF "deactivate dual-monitor treatment" VM-entry
                                    control is 0
                                        THEN SMM-transfer VMCS pointer :=
                                        current-VMCS pointer;
                                    FI;
                                    IF executive-VMCS pointer is VMXON pointer
                                        THEN current-VMCS pointer :=
                                        VMCS-link pointer;
                                        ELSE current-VMCS pointer :=
                                        executive-VMCS pointer;
                                    FI;
                                    leave SMM;
                            FI;
                            VM entry succeeds;
                    FI;
            FI;
    FI;
FI;
```

Further details of the operation of the VM-entry appear in Chapter 27.

Flags Affected

See the operation section and Section 31.2.

Protected Mode Exceptions

#GP(0)	If the current privilege level is not 0.
#UD	If executed outside VMX operation.

Real-Address Mode Exceptions

#UD	The VMLAUNCH and VMRESUME instructions are not recognized in real-address mode.

Virtual-8086 Mode Exceptions

#UD	The VMLAUNCH and VMRESUME instructions are not recognized in virtual-8086 mode.

Compatibility Mode Exceptions

#UD	The VMLAUNCH and VMRESUME instructions are not recognized in compatibility mode.

64-Bit Mode Exceptions

#GP(0)	If the current privilege level is not 0.
#UD	If executed outside VMX operation.

VMPTRLD—Load Pointer to Virtual-Machine Control Structure

Opcode/ Instruction	Op/En	Description
NP 0F C7 /6 VMPTRLD m64	M	Loads the current VMCS pointer from memory.

Instruction Operand Encoding

Op/En	Operand 1	Operand 2	Operand 3	Operand 4
M	ModRM:r/m (r)	NA	NA	NA

Description

Marks the current-VMCS pointer valid and loads it with the physical address in the instruction operand. The instruction fails if its operand is not properly aligned, sets unsupported physical-address bits, or is equal to the VMXON pointer. In addition, the instruction fails if the 32 bits in memory referenced by the operand do not match the VMCS revision identifier supported by this processor.[1]

The operand of this instruction is always 64 bits and is always in memory.

Operation

```
IF (register operand) or (not in VMX operation) or (CR0.PE = 0) or (RFLAGS.VM = 1) or (IA32_EFER.LMA = 1 and CS.L = 0)
    THEN #UD;
ELSIF in VMX non-root operation
    THEN VMexit;
ELSIF CPL > 0
    THEN #GP(0);
    ELSE
        addr := contents of 64-bit in-memory source operand;
        IF addr is not 4KB-aligned OR
        addr sets any bits beyond the physical-address width[2]
            THEN VMfail(VMPTRLD with invalid physical address);
        ELSIF addr = VMXON pointer
            THEN VMfail(VMPTRLD with VMXON pointer);
            ELSE
                rev := 32 bits located at physical address addr;
                IF rev[30:0] ≠ VMCS revision identifier supported by processor OR
                rev[31] = 1 AND processor does not support 1-setting of "VMCS shadowing"
                    THEN VMfail(VMPTRLD with incorrect VMCS revision identifier);
                    ELSE
                        current-VMCS pointer := addr;
                        VMsucceed;
                FI;
        FI;
FI;
```

Flags Affected

See the operation section and Section 31.2.

1. Software should consult the VMX capability MSR VMX_BASIC to discover the VMCS revision identifier supported by this processor (see Appendix A, "VMX Capability Reporting Facility").
2. If IA32_VMX_BASIC[48] is read as 1, VMfail occurs if addr sets any bits in the range 63:32; see Appendix A.1.

Protected Mode Exceptions

#GP(0)	If the current privilege level is not 0.
	If the memory source operand effective address is outside the CS, DS, ES, FS, or GS segment limit.
	If the DS, ES, FS, or GS register contains an unusable segment.
	If the source operand is located in an execute-only code segment.
#PF(fault-code)	If a page fault occurs in accessing the memory source operand.
#SS(0)	If the memory source operand effective address is outside the SS segment limit.
	If the SS register contains an unusable segment.
#UD	If operand is a register.
	If not in VMX operation.

Real-Address Mode Exceptions

#UD	The VMPTRLD instruction is not recognized in real-address mode.

Virtual-8086 Mode Exceptions

#UD	The VMPTRLD instruction is not recognized in virtual-8086 mode.

Compatibility Mode Exceptions

#UD	The VMPTRLD instruction is not recognized in compatibility mode.

64-Bit Mode Exceptions

#GP(0)	If the current privilege level is not 0.
	If the source operand is in the CS, DS, ES, FS, or GS segments and the memory address is in a non-canonical form.
#PF(fault-code)	If a page fault occurs in accessing the memory source operand.
#SS(0)	If the source operand is in the SS segment and the memory address is in a non-canonical form.
#UD	If operand is a register.
	If not in VMX operation.

VMPTRST—Store Pointer to Virtual-Machine Control Structure

Opcode/ Instruction	Op/En	Description
NP 0F C7 /7 VMPTRST m64	M	Stores the current VMCS pointer into memory.

Instruction Operand Encoding

Op/En	Operand 1	Operand 2	Operand 3	Operand 4
M	ModRM:r/m (w)	NA	NA	NA

Description

Stores the current-VMCS pointer into a specified memory address. The operand of this instruction is always 64 bits and is always in memory.

Operation

```
IF (register operand) or (not in VMX operation) or (CR0.PE = 0) or (RFLAGS.VM = 1) or (IA32_EFER.LMA = 1 and CS.L = 0)
    THEN #UD;
ELSIF in VMX non-root operation
    THEN VMexit;
ELSIF CPL > 0
    THEN #GP(0);
    ELSE
        64-bit in-memory destination operand  := current-VMCS pointer;
        VMsucceed;
FI;
```

Flags Affected

See the operation section and Section 31.2.

Protected Mode Exceptions

#GP(0)	If the current privilege level is not 0.
	If the memory destination operand effective address is outside the CS, DS, ES, FS, or GS segment limit.
	If the DS, ES, FS, or GS register contains an unusable segment.
	If the destination operand is located in a read-only data segment or any code segment.
#PF(fault-code)	If a page fault occurs in accessing the memory destination operand.
#SS(0)	If the memory destination operand effective address is outside the SS segment limit.
	If the SS register contains an unusable segment.
#UD	If operand is a register.
	If not in VMX operation.

Real-Address Mode Exceptions

#UD	The VMPTRST instruction is not recognized in real-address mode.

Virtual-8086 Mode Exceptions

#UD	The VMPTRST instruction is not recognized in virtual-8086 mode.

Compatibility Mode Exceptions

#UD	The VMPTRST instruction is not recognized in compatibility mode.

64-Bit Mode Exceptions

#GP(0)	If the current privilege level is not 0.
	If the destination operand is in the CS, DS, ES, FS, or GS segments and the memory address is in a non-canonical form.
#PF(fault-code)	If a page fault occurs in accessing the memory destination operand.
#SS(0)	If the destination operand is in the SS segment and the memory address is in a non-canonical form.
#UD	If operand is a register.
	If not in VMX operation.

VMREAD—Read Field from Virtual-Machine Control Structure

Opcode/ Instruction	Op/En	Description
NP 0F 78 VMREAD r/m64, r64	MR	Reads a specified VMCS field (in 64-bit mode).
NP 0F 78 VMREAD r/m32, r32	MR	Reads a specified VMCS field (outside 64-bit mode).

Instruction Operand Encoding

Op/En	Operand 1	Operand 2	Operand 3	Operand 4
MR	ModRM:r/m (w)	ModRM:reg (r)	NA	NA

Description

Reads a specified field from a VMCS and stores it into a specified destination operand (register or memory). In VMX root operation, the instruction reads from the current VMCS. If executed in VMX non-root operation, the instruction reads from the VMCS referenced by the VMCS link pointer field in the current VMCS.

The VMCS field is specified by the VMCS-field encoding contained in the register source operand. Outside IA-32e mode, the source operand has 32 bits, regardless of the value of CS.D. In 64-bit mode, the source operand has 64 bits.

The effective size of the destination operand, which may be a register or in memory, is always 32 bits outside IA-32e mode (the setting of CS.D is ignored with respect to operand size) and 64 bits in 64-bit mode. If the VMCS field specified by the source operand is shorter than this effective operand size, the high bits of the destination operand are cleared to 0. If the VMCS field is longer, then the high bits of the field are not read.

Note that any faults resulting from accessing a memory destination operand can occur only after determining, in the operation section below, that the relevant VMCS pointer is valid and that the specified VMCS field is supported.

Operation

```
IF (not in VMX operation) or (CR0.PE = 0) or (RFLAGS.VM = 1) or (IA32_EFER.LMA = 1 and CS.L = 0)
    THEN #UD;
ELSIF in VMX non-root operation AND ("VMCS shadowing" is 0 OR source operand sets bits in range 63:15 OR
VMREAD bit corresponding to bits 14:0 of source operand is 1)[1]
    THEN VMexit;
ELSIF CPL > 0
    THEN #GP(0);
ELSIF (in VMX root operation AND current-VMCS pointer is not valid) OR
(in VMX non-root operation AND VMCS link pointer is not valid)
    THEN VMfailInvalid;
ELSIF source operand does not correspond to any VMCS field
    THEN VMfailValid(VMREAD/VMWRITE from/to unsupported VMCS component);
    ELSE
        IF in VMX root operation
            THEN destination operand := contents of field indexed by source operand in current VMCS;
            ELSE destination operand := contents of field indexed by source operand in VMCS referenced by VMCS link pointer;
        FI;
        VMsucceed;
FI;
```

1. The VMREAD bit for a source operand is defined as follows. Let *x* be the value of bits 14:0 of the source operand and let *addr* be the VMREAD-bitmap address. The corresponding VMREAD bit is in bit position *x* & 7 of the byte at physical address *addr* | (x » 3).

Flags Affected

See the operation section and Section 31.2.

Protected Mode Exceptions

#GP(0)	If the current privilege level is not 0.
	If a memory destination operand effective address is outside the CS, DS, ES, FS, or GS segment limit.
	If the DS, ES, FS, or GS register contains an unusable segment.
	If the destination operand is located in a read-only data segment or any code segment.
#PF(fault-code)	If a page fault occurs in accessing a memory destination operand.
#SS(0)	If a memory destination operand effective address is outside the SS segment limit.
	If the SS register contains an unusable segment.
#UD	If not in VMX operation.

Real-Address Mode Exceptions

#UD	The VMREAD instruction is not recognized in real-address mode.

Virtual-8086 Mode Exceptions

#UD	The VMREAD instruction is not recognized in virtual-8086 mode.

Compatibility Mode Exceptions

#UD	The VMREAD instruction is not recognized in compatibility mode.

64-Bit Mode Exceptions

#GP(0)	If the current privilege level is not 0.
	If the memory destination operand is in the CS, DS, ES, FS, or GS segments and the memory address is in a non-canonical form.
#PF(fault-code)	If a page fault occurs in accessing a memory destination operand.
#SS(0)	If the memory destination operand is in the SS segment and the memory address is in a non-canonical form.
#UD	If not in VMX operation.

VMRESUME—Resume Virtual Machine

See VMLAUNCH/VMRESUME—Launch/Resume Virtual Machine.

VMWRITE—Write Field to Virtual-Machine Control Structure

Opcode/ Instruction	Op/En	Description
NP 0F 79 VMWRITE r64, r/m64	RM	Writes a specified VMCS field (in 64-bit mode).
NP 0F 79 VMWRITE r32, r/m32	RM	Writes a specified VMCS field (outside 64-bit mode).

Instruction Operand Encoding

Op/En	Operand 1	Operand 2	Operand 3	Operand 4
RM	ModRM:reg (r)	ModRM:r/m (r)	NA	NA

Description

Writes the contents of a primary source operand (register or memory) to a specified field in a VMCS. In VMX root operation, the instruction writes to the current VMCS. If executed in VMX non-root operation, the instruction writes to the VMCS referenced by the VMCS link pointer field in the current VMCS.

The VMCS field is specified by the VMCS-field encoding contained in the register secondary source operand. Outside IA-32e mode, the secondary source operand is always 32 bits, regardless of the value of CS.D. In 64-bit mode, the secondary source operand has 64 bits.

The effective size of the primary source operand, which may be a register or in memory, is always 32 bits outside IA-32e mode (the setting of CS.D is ignored with respect to operand size) and 64 bits in 64-bit mode. If the VMCS field specified by the secondary source operand is shorter than this effective operand size, the high bits of the primary source operand are ignored. If the VMCS field is longer, then the high bits of the field are cleared to 0.

Note that any faults resulting from accessing a memory source operand occur after determining, in the operation section below, that the relevant VMCS pointer is valid but before determining if the destination VMCS field is supported.

Operation

```
IF (not in VMX operation) or (CR0.PE = 0) or (RFLAGS.VM = 1) or (IA32_EFER.LMA = 1 and CS.L = 0)
    THEN #UD;
ELSIF in VMX non-root operation AND ("VMCS shadowing" is 0 OR secondary source operand sets bits in range 63:15 OR
VMWRITE bit corresponding to bits 14:0 of secondary source operand is 1)[1]
    THEN VMexit;
ELSIF CPL > 0
    THEN #GP(0);
ELSIF (in VMX root operation AND current-VMCS pointer is not valid) OR
(in VMX non-root operation AND VMCS-link pointer is not valid)
    THEN VMfailInvalid;
ELSIF secondary source operand does not correspond to any VMCS field
    THEN VMfailValid(VMREAD/VMWRITE from/to unsupported VMCS component);
ELSIF VMCS field indexed by secondary source operand is a VM-exit information field AND
processor does not support writing to such fields[2]
    THEN VMfailValid(VMWRITE to read-only VMCS component);
    ELSE
```

1. The VMWRITE bit for a secondary source operand is defined as follows. Let *x* be the value of bits 14:0 of the secondary source operand and let *addr* be the VMWRITE-bitmap address. The corresponding VMWRITE bit is in bit position *x* & 7 of the byte at physical address *addr* | (x » 3).
2. Software can discover whether these fields can be written by reading the VMX capability MSR IA32_VMX_MISC (see Appendix A.6).

```
        IF in VMX root operation
            THEN field indexed by secondary source operand in current VMCS := primary source operand;
            ELSE field indexed by secondary source operand in VMCS referenced by VMCS link pointer := primary source operand;
        FI;
        VMsucceed;
FI;
```

Flags Affected

See the operation section and Section 31.2.

Protected Mode Exceptions

#GP(0)	If the current privilege level is not 0.
	If a memory source operand effective address is outside the CS, DS, ES, FS, or GS segment limit.
	If the DS, ES, FS, or GS register contains an unusable segment.
	If the source operand is located in an execute-only code segment.
#PF(fault-code)	If a page fault occurs in accessing a memory source operand.
#SS(0)	If a memory source operand effective address is outside the SS segment limit.
	If the SS register contains an unusable segment.
#UD	If not in VMX operation.

Real-Address Mode Exceptions

#UD	The VMWRITE instruction is not recognized in real-address mode.

Virtual-8086 Mode Exceptions

#UD	The VMWRITE instruction is not recognized in virtual-8086 mode.

Compatibility Mode Exceptions

#UD	The VMWRITE instruction is not recognized in compatibility mode.

64-Bit Mode Exceptions

#GP(0)	If the current privilege level is not 0.
	If the memory source operand is in the CS, DS, ES, FS, or GS segments and the memory address is in a non-canonical form.
#PF(fault-code)	If a page fault occurs in accessing a memory source operand.
#SS(0)	If the memory source operand is in the SS segment and the memory address is in a non-canonical form.
#UD	If not in VMX operation.

VMXOFF—Leave VMX Operation

Opcode/ Instruction	Op/En	Description
0F 01 C4 VMXOFF	ZO	Leaves VMX operation.

Instruction Operand Encoding

Op/En	Operand 1	Operand 2	Operand 3	Operand 4
ZO	NA	NA	NA	NA

Description

Takes the logical processor out of VMX operation, unblocks INIT signals, conditionally re-enables A20M, and clears any address-range monitoring.[1]

Operation

```
IF (not in VMX operation) or (CR0.PE = 0) or (RFLAGS.VM = 1) or (IA32_EFER.LMA = 1 and CS.L = 0)
    THEN #UD;
ELSIF in VMX non-root operation
    THEN VMexit;
ELSIF CPL > 0
    THEN #GP(0);
ELSIF dual-monitor treatment of SMIs and SMM is active
    THEN VMfail(VMXOFF under dual-monitor treatment of SMIs and SMM);
    ELSE
        leave VMX operation;
        unblock INIT;
        IF IA32_SMM_MONITOR_CTL[2] = 0[2]
            THEN unblock SMIs;
        IF outside SMX operation[3]
            THEN unblock and enable A20M;
        FI;
        clear address-range monitoring;
        VMsucceed;
FI;
```

Flags Affected

See the operation section and Section 31.2.

Protected Mode Exceptions

#GP(0) If executed in VMX root operation with CPL > 0.

---

1. See the information on MONITOR/MWAIT in Chapter 9, "Multiple-Processor Management," of the *Intel® 64 and IA-32 Architectures Software Developer's Manual, Volume 3A*.
2. Setting IA32_SMM_MONITOR_CTL[bit 2] to 1 prevents VMXOFF from unblocking SMIs regardless of the value of the register's value bit (bit 0). Not all processors allow this bit to be set to 1. Software should consult the VMX capability MSR IA32_VMX_MISC (see Appendix A.6) to determine whether this is allowed.
3. A logical processor is outside SMX operation if GETSEC[SENTER] has not been executed or if GETSEC[SEXIT] was executed after the last execution of GETSEC[SENTER]. See Chapter 6, "Safer Mode Extensions Reference."

#UD	If executed outside VMX operation.

Real-Address Mode Exceptions

#UD	The VMXOFF instruction is not recognized in real-address mode.

Virtual-8086 Mode Exceptions

#UD	The VMXOFF instruction is not recognized in virtual-8086 mode.

Compatibility Mode Exceptions

#UD	The VMXOFF instruction is not recognized in compatibility mode.

64-Bit Mode Exceptions

#GP(0)	If executed in VMX root operation with CPL > 0.
#UD	If executed outside VMX operation.

VMXON—Enter VMX Operation

Opcode/ Instruction	Op/En	Description
F3 0F C7 /6 VMXON m64	M	Enter VMX root operation.

Instruction Operand Encoding

Op/En	Operand 1	Operand 2	Operand 3	Operand 4
M	ModRM:r/m (r)	NA	NA	NA

Description

Puts the logical processor in VMX operation with no current VMCS, blocks INIT signals, disables A20M, and clears any address-range monitoring established by the MONITOR instruction.[1]

The operand of this instruction is a 4KB-aligned physical address (the VMXON pointer) that references the VMXON region, which the logical processor may use to support VMX operation. This operand is always 64 bits and is always in memory.

Operation

```
IF (register operand) or (CR0.PE = 0) or (CR4.VMXE = 0) or (RFLAGS.VM = 1) or (IA32_EFER.LMA = 1 and CS.L = 0)
    THEN #UD;
ELSIF not in VMX operation
    THEN
        IF (CPL > 0) or (in A20M mode) or
        (the values of CR0 and CR4 are not supported in VMX operation; see Section 24.8) or
        (bit 0 (lock bit) of IA32_FEATURE_CONTROL MSR is clear) or
        (in SMX operation[2] and bit 1 of IA32_FEATURE_CONTROL MSR is clear) or
        (outside SMX operation and bit 2 of IA32_FEATURE_CONTROL MSR is clear)
            THEN #GP(0);
            ELSE
                addr := contents of 64-bit in-memory source operand;
                IF addr is not 4KB-aligned or
                addr sets any bits beyond the physical-address width[3]
                    THEN VMfailInvalid;
                    ELSE
                        rev := 32 bits located at physical address addr;
                        IF rev[30:0] ≠ VMCS revision identifier supported by processor OR rev[31] = 1
                            THEN VMfailInvalid;
                            ELSE
                                current-VMCS pointer := FFFFFFFF_FFFFFFFFH;
                                enter VMX operation;
                                block INIT signals;
                                block and disable A20M;
```

1. See the information on MONITOR/MWAIT in Chapter 9, "Multiple-Processor Management," of the *Intel® 64 and IA-32 Architectures Software Developer's Manual, Volume 3A*.
2. A logical processor is in SMX operation if GETSEC[SEXIT] has not been executed since the last execution of GETSEC[SENTER]. A logical processor is outside SMX operation if GETSEC[SENTER] has not been executed or if GETSEC[SEXIT] was executed after the last execution of GETSEC[SENTER]. See Chapter 6, "Safer Mode Extensions Reference."
3. If IA32_VMX_BASIC[48] is read as 1, VMfailInvalid occurs if addr sets any bits in the range 63:32; see Appendix A.1.

```
                                clear address-range monitoring;
                                IF the processor supports Intel PT but does not allow it to be used in VMX operation[1]
                                    THEN IA32_RTIT_CTL.TraceEn := 0;
                                FI;
                                VMsucceed;
                            FI;
                        FI;
                FI;
ELSIF in VMX non-root operation
    THEN VMexit;
ELSIF CPL > 0
    THEN #GP(0);
    ELSE VMfail("VMXON executed in VMX root operation");
FI;
```

Flags Affected

See the operation section and Section 31.2.

Protected Mode Exceptions

#GP(0)	If executed outside VMX operation with CPL>0 or with invalid CR0 or CR4 fixed bits.
	If executed in A20M mode.
	If the memory source operand effective address is outside the CS, DS, ES, FS, or GS segment limit.
	If the DS, ES, FS, or GS register contains an unusable segment.
	If the source operand is located in an execute-only code segment.
	If the value of the IA32_FEATURE_CONTROL MSR does not support entry to VMX operation in the current processor mode.
#PF(fault-code)	If a page fault occurs in accessing the memory source operand.
#SS(0)	If the memory source operand effective address is outside the SS segment limit.
	If the SS register contains an unusable segment.
#UD	If operand is a register.
	If executed with CR4.VMXE = 0.

Real-Address Mode Exceptions

#UD	The VMXON instruction is not recognized in real-address mode.

Virtual-8086 Mode Exceptions

#UD	The VMXON instruction is not recognized in virtual-8086 mode.

Compatibility Mode Exceptions

#UD	The VMXON instruction is not recognized in compatibility mode.

64-Bit Mode Exceptions

#GP(0)	If executed outside VMX operation with CPL > 0 or with invalid CR0 or CR4 fixed bits.
	If executed in A20M mode.
	If the source operand is in the CS, DS, ES, FS, or GS segments and the memory address is in a non-canonical form.

1. Software should read the VMX capability MSR IA32_VMX_MISC to determine whether the processor allows Intel PT to be used in VMX operation (see Appendix A.6).

	If the value of the IA32_FEATURE_CONTROL MSR does not support entry to VMX operation in the current processor mode.
#PF(fault-code)	If a page fault occurs in accessing the memory source operand.
#SS(0)	If the source operand is in the SS segment and the memory address is in a non-canonical form.
#UD	If operand is a register.
	If executed with CR4.VMXE = 0.

31.4 VM INSTRUCTION ERROR NUMBERS

For certain error conditions, the VM-instruction error field is loaded with an error number to indicate the source of the error. Table 31-1 lists VM-instruction error numbers.

Table 31-1. VM-Instruction Error Numbers

Error Number	Description
1	VMCALL executed in VMX root operation
2	VMCLEAR with invalid physical address
3	VMCLEAR with VMXON pointer
4	VMLAUNCH with non-clear VMCS
5	VMRESUME with non-launched VMCS
6	VMRESUME after VMXOFF (VMXOFF and VMXON between VMLAUNCH and VMRESUME)[a]
7	VM entry with invalid control field(s)[b,c]
8	VM entry with invalid host-state field(s)[b]
9	VMPTRLD with invalid physical address
10	VMPTRLD with VMXON pointer
11	VMPTRLD with incorrect VMCS revision identifier
12	VMREAD/VMWRITE from/to unsupported VMCS component
13	VMWRITE to read-only VMCS component
15	VMXON executed in VMX root operation
16	VM entry with invalid executive-VMCS pointer[b]
17	VM entry with non-launched executive VMCS[b]
18	VM entry with executive-VMCS pointer not VMXON pointer (when attempting to deactivate the dual-monitor treatment of SMIs and SMM)[b]
19	VMCALL with non-clear VMCS (when attempting to activate the dual-monitor treatment of SMIs and SMM)
20	VMCALL with invalid VM-exit control fields
22	VMCALL with incorrect MSEG revision identifier (when attempting to activate the dual-monitor treatment of SMIs and SMM)
23	VMXOFF under dual-monitor treatment of SMIs and SMM
24	VMCALL with invalid SMM-monitor features (when attempting to activate the dual-monitor treatment of SMIs and SMM)
25	VM entry with invalid VM-execution control fields in executive VMCS (when attempting to return from SMM)[b,c]
26	VM entry with events blocked by MOV SS.
28	Invalid operand to INVEPT/INVVPID.

NOTES:

a. Earlier versions of this manual described this error as "VMRESUME with a corrupted VMCS".

b. VM-entry checks on control fields and host-state fields may be performed in any order. Thus, an indication by error number of one cause does not imply that there are not also other errors. Different processors may give different error numbers for the same VMCS.

c. Error number 7 is not used for VM entries that return from SMM that fail due to invalid VM-execution control fields in the executive VMCS. Error number 25 is used for these cases.

CHAPTER 32
SYSTEM MANAGEMENT MODE

This chapter describes aspects of IA-64 and IA-32 architecture used in system management mode (SMM).

SMM provides an alternate operating environment that can be used to monitor and manage various system resources for more efficient energy usage, to control system hardware, and/or to run proprietary code. It was introduced into the IA-32 architecture in the Intel386 SL processor (a mobile specialized version of the Intel386 processor). It is also available in the Pentium M, Pentium 4, Intel Xeon, P6 family, and Pentium and Intel486 processors (beginning with the enhanced versions of the Intel486 SL and Intel486 processors).

32.1 SYSTEM MANAGEMENT MODE OVERVIEW

SMM is a special-purpose operating mode provided for handling system-wide functions like power management, system hardware control, or proprietary OEM-designed code. It is intended for use only by system firmware, not by applications software or general-purpose systems software. The main benefit of SMM is that it offers a distinct and easily isolated processor environment that operates transparently to the operating system or executive and software applications.

When SMM is invoked through a system management interrupt (SMI), the processor saves the current state of the processor (the processor's context), then switches to a separate operating environment defined by a new address space. The system management software executive (SMI handler) starts execution in that environment, and the critical code and data of the SMI handler reside in a physical memory region (SMRAM) within that address space. While in SMM, the processor executes SMI handler code to perform operations such as powering down unused disk drives or monitors, executing proprietary code, or placing the whole system in a suspended state. When the SMI handler has completed its operations, it executes a resume (RSM) instruction. This instruction causes the processor to reload the saved context of the processor, switch back to protected or real mode, and resume executing the interrupted application or operating-system program or task.

The following SMM mechanisms make it transparent to applications programs and operating systems:

- The only way to enter SMM is by means of an SMI.
- The processor executes SMM code in a separate address space that can be made inaccessible from the other operating modes.
- Upon entering SMM, the processor saves the context of the interrupted program or task.
- All interrupts normally handled by the operating system are disabled upon entry into SMM.
- The RSM instruction can be executed only in SMM.

Section 32.3 describes transitions into and out of SMM. The execution environment after entering SMM is in real-address mode with paging disabled (CR0.PE = CR0.PG = 0). In this initial execution environment, the SMI handler can address up to 4 GBytes of memory and can execute all I/O and system instructions. Section 32.5 describes in detail the initial SMM execution environment for an SMI handler and operation within that environment. The SMI handler may subsequently switch to other operating modes while remaining in SMM.

NOTES

Software developers should be aware that, even if a logical processor was using the physical-address extension (PAE) mechanism (introduced in the P6 family processors) or was in IA-32e mode before an SMI, this will not be the case after the SMI is delivered. This is because delivery of an SMI disables paging (see Table 32-4). (This does not apply if the dual-monitor treatment of SMIs and SMM is active; see Section 32.15.)

32.1.1 System Management Mode and VMX Operation

Traditionally, SMM services system management interrupts and then resumes program execution (back to the software stack consisting of executive and application software; see Section 32.2 through Section 32.13).

A virtual machine monitor (VMM) using VMX can act as a host to multiple virtual machines and each virtual machine can support its own software stack of executive and application software. On processors that support VMX, virtual-machine extensions may use system-management interrupts (SMIs) and system-management mode (SMM) in one of two ways:

- **Default treatment.** System firmware handles SMIs. The processor saves architectural states and critical states relevant to VMX operation upon entering SMM. When the firmware completes servicing SMIs, it uses RSM to resume VMX operation.
- **Dual-monitor treatment.** Two VM monitors collaborate to control the servicing of SMIs: one VMM operates outside of SMM to provide basic virtualization in support for guests; the other VMM operates inside SMM (while in VMX operation) to support system-management functions. The former is referred to as **executive monitor**, the latter **SMM-transfer monitor** (**STM**).[1]

The default treatment is described in Section 32.14, "Default Treatment of SMIs and SMM with VMX Operation and SMX Operation". Dual-monitor treatment of SMM is described in Section 32.15, "Dual-Monitor Treatment of SMIs and SMM".

32.2 SYSTEM MANAGEMENT INTERRUPT (SMI)

The only way to enter SMM is by signaling an SMI through the SMI# pin on the processor or through an SMI message received through the APIC bus. The SMI is a nonmaskable external interrupt that operates independently from the processor's interrupt- and exception-handling mechanism and the local APIC. The SMI takes precedence over an NMI and a maskable interrupt. SMM is non-reentrant; that is, the SMI is disabled while the processor is in SMM.

NOTES

In the Pentium 4, Intel Xeon, and P6 family processors, when a processor that is designated as an application processor during an MP initialization sequence is waiting for a startup IPI (SIPI), it is in a mode where SMIs are masked. However if a SMI is received while an application processor is in the wait for SIPI mode, the SMI will be pended. The processor then responds on receipt of a SIPI by immediately servicing the pended SMI and going into SMM before handling the SIPI.

An SMI may be blocked for one instruction following execution of STI, MOV to SS, or POP into SS.

32.3 SWITCHING BETWEEN SMM AND THE OTHER PROCESSOR OPERATING MODES

Figure 2-3 shows how the processor moves between SMM and the other processor operating modes (protected, real-address, and virtual-8086). Signaling an SMI while the processor is in real-address, protected, or virtual-8086 modes always causes the processor to switch to SMM. Upon execution of the RSM instruction, the processor always returns to the mode it was in when the SMI occurred.

32.3.1 Entering SMM

The processor always handles an SMI on an architecturally defined "interruptible" point in program execution (which is commonly at an IA-32 architecture instruction boundary). When the processor receives an SMI, it waits for all instructions to retire and for all stores to complete. The processor then saves its current context in SMRAM (see Section 32.4), enters SMM, and begins to execute the SMI handler.

1. The dual-monitor treatment may not be supported by all processors. Software should consult the VMX capability MSR IA32_VMX_BASIC (see Appendix A.1) to determine whether it is supported.

Upon entering SMM, the processor signals external hardware that SMI handling has begun. The signaling mechanism used is implementation dependent. For the P6 family processors, an SMI acknowledge transaction is generated on the system bus and the multiplexed status signal EXF4 is asserted each time a bus transaction is generated while the processor is in SMM. For the Pentium and Intel486 processors, the SMIACT# pin is asserted.

An SMI has a greater priority than debug exceptions and external interrupts. Thus, if an NMI, maskable hardware interrupt, or a debug exception occurs at an instruction boundary along with an SMI, only the SMI is handled. Subsequent SMI requests are not acknowledged while the processor is in SMM. The first SMI interrupt request that occurs while the processor is in SMM (that is, after SMM has been acknowledged to external hardware) is latched and serviced when the processor exits SMM with the RSM instruction. The processor will latch only one SMI while in SMM.

See Section 32.5 for a detailed description of the execution environment when in SMM.

32.3.2 Exiting From SMM

The only way to exit SMM is to execute the RSM instruction. The RSM instruction is only available to the SMI handler; if the processor is not in SMM, attempts to execute the RSM instruction result in an invalid-opcode exception (#UD) being generated.

The RSM instruction restores the processor's context by loading the state save image from SMRAM back into the processor's registers. The processor then returns an SMIACK transaction on the system bus and returns program control back to the interrupted program.

NOTE

On processors that support the shadow-stack feature, RSM loads the SSP register from the state save image in SMRAM (see Table 32-3). The value is made canonical by sign-extension before loading it into SSP.

Upon successful completion of the RSM instruction, the processor signals external hardware that SMM has been exited. For the P6 family processors, an SMI acknowledge transaction is generated on the system bus and the multiplexed status signal EXF4 is no longer generated on bus cycles. For the Pentium and Intel486 processors, the SMIACT# pin is deserted.

If the processor detects invalid state information saved in the SMRAM, it enters the shutdown state and generates a special bus cycle to indicate it has entered shutdown state. Shutdown happens only in the following situations:

- A reserved bit in control register CR4 is set to 1 on a write to CR4. This error should not happen unless SMI handler code modifies reserved areas of the SMRAM saved state map (see Section 32.4.1). CR4 is saved in the state map in a reserved location and cannot be read or modified in its saved state.
- An illegal combination of bits is written to control register CR0, in particular PG set to 1 and PE set to 0, or NW set to 1 and CD set to 0.
- CR4.PCIDE would be set to 1 and IA32_EFER.LMA to 0.
- (For the Pentium and Intel486 processors only.) If the address stored in the SMBASE register when an RSM instruction is executed is not aligned on a 32-KByte boundary. This restriction does not apply to the P6 family processors.
- CR4.CET would be set to 1 and CR0.WP to 0.

In the shutdown state, Intel processors stop executing instructions until a RESET#, INIT# or NMI# is asserted. While Pentium family processors recognize the SMI# signal in shutdown state, P6 family and Intel486 processors do not. Intel does not support using SMI# to recover from shutdown states for any processor family; the response of processors in this circumstance is not well defined. On Pentium 4 and later processors, shutdown will inhibit INTR and A20M but will not change any of the other inhibits. On these processors, NMIs will be inhibited if no action is taken in the SMI handler to uninhibit them (see Section 32.8).

If the processor is in the HALT state when the SMI is received, the processor handles the return from SMM slightly differently (see Section 32.10). Also, the SMBASE address can be changed on a return from SMM (see Section 32.11).

32.4 SMRAM

Upon entering SMM, the processor switches to a new address space. Because paging is disabled upon entering SMM, this initial address space maps all memory accesses to the low 4 GBytes of the processor's physical address space. The SMI handler's critical code and data reside in a memory region referred to as system-management RAM (SMRAM). The processor uses a pre-defined region within SMRAM to save the processor's pre-SMI context. SMRAM can also be used to store system management information (such as the system configuration and specific information about powered-down devices) and OEM-specific information.

The default SMRAM size is 64 KBytes beginning at a base physical address in physical memory called the SMBASE (see Figure 32-1). The SMBASE default value following a hardware reset is 30000H. The processor looks for the first instruction of the SMI handler at the address [SMBASE + 8000H]. It stores the processor's state in the area from [SMBASE + FE00H] to [SMBASE + FFFFH]. See Section 32.4.1 for a description of the mapping of the state save area.

The system logic is minimally required to decode the physical address range for the SMRAM from [SMBASE + 8000H] to [SMBASE + FFFFH]. A larger area can be decoded if needed. The size of this SMRAM can be between 32 KBytes and 4 GBytes.

The location of the SMRAM can be changed by changing the SMBASE value (see Section 32.11). It should be noted that all processors in a multiple-processor system are initialized with the same SMBASE value (30000H). Initialization software must sequentially place each processor in SMM and change its SMBASE so that it does not overlap those of other processors.

The actual physical location of the SMRAM can be in system memory or in a separate RAM memory. The processor generates an SMI acknowledge transaction (P6 family processors) or asserts the SMIACT# pin (Pentium and Intel486 processors) when the processor receives an SMI (see Section 32.3.1).

System logic can use the SMI acknowledge transaction or the assertion of the SMIACT# pin to decode accesses to the SMRAM and redirect them (if desired) to specific SMRAM memory. If a separate RAM memory is used for SMRAM, system logic should provide a programmable method of mapping the SMRAM into system memory space when the processor is not in SMM. This mechanism will enable start-up procedures to initialize the SMRAM space (that is, load the SMI handler) before executing the SMI handler during SMM.

32.4.1 SMRAM State Save Map

When an IA-32 processor that does not support Intel 64 architecture initially enters SMM, it writes its state to the state save area of the SMRAM. The state save area begins at [SMBASE + 8000H + 7FFFH] and extends down to [SMBASE + 8000H + 7E00H]. Table 32-1 shows the state save map. The offset in column 1 is relative to the SMBASE value plus 8000H. Reserved spaces should not be used by software.

Some of the registers in the SMRAM state save area (marked YES in column 3) may be read and changed by the SMI handler, with the changed values restored to the processor registers by the RSM instruction. Some register images are read-only, and must not be modified (modifying these registers will result in unpredictable behavior). An SMI handler should not rely on any values stored in an area that is marked as reserved.

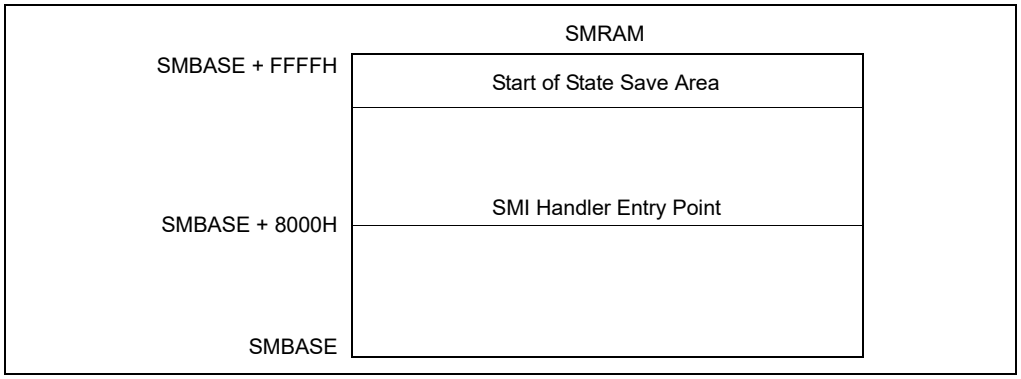

Figure 32-1. SMRAM Usage

Table 32-1. SMRAM State Save Map

Offset (Added to SMBASE + 8000H)	Register	Writable?
7FFCH	CR0	No
7FF8H	CR3	No
7FF4H	EFLAGS	Yes
7FF0H	EIP	Yes
7FECH	EDI	Yes
7FE8H	ESI	Yes
7FE4H	EBP	Yes
7FE0H	ESP	Yes
7FDCH	EBX	Yes
7FD8H	EDX	Yes
7FD4H	ECX	Yes
7FD0H	EAX	Yes
7FCCH	DR6	No
7FC8H	DR7	No
7FC4H	TR[1]	No
7FC0H	Reserved	No
7FBCH	GS[1]	No
7FB8H	FS[1]	No
7FB4H	DS[1]	No
7FB0H	SS[1]	No
7FACH	CS[1]	No
7FA8H	ES[1]	No
7FA4H	I/O State Field, see Section 32.7	No
7FA0H	I/O Memory Address Field, see Section 32.7	No
7F9FH-7F03H	Reserved	No
7F02H	Auto HALT Restart Field (Word)	Yes
7F00H	I/O Instruction Restart Field (Word)	Yes
7EFCH	SMM Revision Identifier Field (Doubleword)	No
7EF8H	SMBASE Field (Doubleword)	Yes
7EF7H - 7E00H	Reserved	No

NOTE:

1. The two most significant bytes are reserved.

The following registers are saved (but not readable) and restored upon exiting SMM:

- Control register CR4. (This register is cleared to all 0s when entering SMM).
- The hidden segment descriptor information stored in segment registers CS, DS, ES, FS, GS, and SS.

If an SMI request is issued for the purpose of powering down the processor, the values of all reserved locations in the SMM state save must be saved to nonvolatile memory.

The following state is not automatically saved and restored following an SMI and the RSM instruction, respectively:

- Debug registers DR0 through DR3.
- The x87 FPU registers.
- The MTRRs.
- Control register CR2.
- The model-specific registers (for the P6 family and Pentium processors) or test registers TR3 through TR7 (for the Pentium and Intel486 processors).
- The state of the trap controller.
- The machine-check architecture registers.
- The APIC internal interrupt state (ISR, IRR, etc.).
- The microcode update state.

If an SMI is used to power down the processor, a power-on reset will be required before returning to SMM, which will reset much of this state back to its default values. So an SMI handler that is going to trigger power down should first read these registers listed above directly, and save them (along with the rest of RAM) to nonvolatile storage. After the power-on reset, the continuation of the SMI handler should restore these values, along with the rest of the system's state. Anytime the SMI handler changes these registers in the processor, it must also save and restore them.

NOTES

A small subset of the MSRs (such as, the time-stamp counter and performance-monitoring counters) are not arbitrarily writable and therefore cannot be saved and restored. SMM-based power-down and restoration should only be performed with operating systems that do not use or rely on the values of these registers.

Operating system developers should be aware of this fact and ensure that their operating-system assisted power-down and restoration software is immune to unexpected changes in these register values.

32.4.1.1 SMRAM State Save Map and Intel 64 Architecture

When the processor initially enters SMM, it writes its state to the state save area of the SMRAM. The state save area on an Intel 64 processor at [SMBASE + 8000H + 7FFFH] and extends to [SMBASE + 8000H + 7C00H].

Support for Intel 64 architecture is reported by CPUID.80000001:EDX[29] = 1. The layout of the SMRAM state save map is shown in Table 32-3.

Additionally, the SMRAM state save map shown in Table 32-3 also applies to processors with the following CPUID signatures listed in Table 32-2, irrespective of the value in CPUID.80000001:EDX[29].

Table 32-2. Processor Signatures and 64-bit SMRAM State Save Map Format

DisplayFamily_DisplayModel	Processor Families/Processor Number Series
06_17H	Intel Xeon Processor 5200, 5400 series, Intel Core 2 Quad processor Q9xxx, Intel Core 2 Duo processors E8000, T9000,
06_0FH	Intel Xeon Processor 3000, 3200, 5100, 5300, 7300 series, Intel Core 2 Quad, Intel Core 2 Extreme, Intel Core 2 Duo processors, Intel Pentium dual-core processors
06_1CH	45 nm Intel Atom® processors

Table 32-3. SMRAM State Save Map for Intel 64 Architecture

Offset (Added to SMBASE + 8000H)	Register	Writable?
7FF8H	CR0	No
7FF0H	CR3	No
7FE8H	RFLAGS	Yes
7FE0H	IA32_EFER	Yes
7FD8H	RIP	Yes
7FD0H	DR6	No
7FC8H	DR7	No
7FC4H	TR SEL[1]	No
7FC0H	LDTR SEL[1]	No
7FBCH	GS SEL[1]	No
7FB8H	FS SEL[1]	No
7FB4H	DS SEL[1]	No
7FB0H	SS SEL[1]	No
7FACH	CS SEL[1]	No
7FA8H	ES SEL[1]	No
7FA4H	IO_MISC	No
7F9CH	IO_MEM_ADDR	No
7F94H	RDI	Yes
7F8CH	RSI	Yes
7F84H	RBP	Yes
7F7CH	RSP	Yes
7F74H	RBX	Yes
7F6CH	RDX	Yes
7F64H	RCX	Yes
7F5CH	RAX	Yes
7F54H	R8	Yes
7F4CH	R9	Yes
7F44H	R10	Yes
7F3CH	R11	Yes
7F34H	R12	Yes
7F2CH	R13	Yes
7F24H	R14	Yes
7F1CH	R15	Yes
7F1BH-7F04H	Reserved	No
7F02H	Auto HALT Restart Field (Word)	Yes
7F00H	I/O Instruction Restart Field (Word)	Yes
7EFCH	SMM Revision Identifier Field (Doubleword)	No
7EF8H	SMBASE Field (Doubleword)	Yes

Table 32-3. SMRAM State Save Map for Intel 64 Architecture (Contd.)

Offset (Added to SMBASE + 8000H)	Register	Writable?
7EF7H - 7EE4H	Reserved	No
7EE0H	Setting of "enable EPT" VM-execution control	No
7ED8H	Value of EPTP VM-execution control field	No
7ED7H - 7ECC0H	Reserved	No
7EC8H	SSP	Yes
7EC7H - 7EA0H	Reserved	No
7E9CH	LDT Base (lower 32 bits)	No
7E98H	Reserved	No
7E94H	IDT Base (lower 32 bits)	No
7E90H	Reserved	No
7E8CH	GDT Base (lower 32 bits)	No
7E8BH - 7E48H	Reserved	No
7E40H	CR4 (64 bits)	No
7E3FH - 7DF0H	Reserved	No
7DE8H	IO_RIP	Yes
7DE7H - 7DDCH	Reserved	No
7DD8H	IDT Base (Upper 32 bits)	No
7DD4H	LDT Base (Upper 32 bits)	No
7DD0H	GDT Base (Upper 32 bits)	No
7DCFH - 7C00H	Reserved	No

NOTE:

1. The two most significant bytes are reserved.

32.4.2 SMRAM Caching

An IA-32 processor does not automatically write back and invalidate its caches before entering SMM or before exiting SMM. Because of this behavior, care must be taken in the placement of the SMRAM in system memory and in the caching of the SMRAM to prevent cache incoherence when switching back and forth between SMM and protected mode operation. Any of the following three methods of locating the SMRAM in system memory will guarantee cache coherency.

- Place the SMRAM in a dedicated section of system memory that the operating system and applications are prevented from accessing. Here, the SMRAM can be designated as cacheable (WB, WT, or WC) for optimum processor performance, without risking cache incoherence when entering or exiting SMM.
- Place the SMRAM in a section of memory that overlaps an area used by the operating system (such as the video memory), but designate the SMRAM as uncacheable (UC). This method prevents cache access when in SMM to maintain cache coherency, but the use of uncacheable memory reduces the performance of SMM code.
- Place the SMRAM in a section of system memory that overlaps an area used by the operating system and/or application code, but explicitly flush (write back and invalidate) the caches upon entering and exiting SMM mode. This method maintains cache coherency, but incurs the overhead of two complete cache flushes.

For Pentium 4, Intel Xeon, and P6 family processors, a combination of the first two methods of locating the SMRAM is recommended. Here the SMRAM is split between an overlapping and a dedicated region of memory. Upon entering SMM, the SMRAM space that is accessed overlaps video memory (typically located in low memory). This SMRAM section is designated as UC memory. The initial SMM code then jumps to a second SMRAM section that is

located in a dedicated region of system memory (typically in high memory). This SMRAM section can be cached for optimum processor performance.

For systems that explicitly flush the caches upon entering SMM (the third method described above), the cache flush can be accomplished by asserting the FLUSH# pin at the same time as the request to enter SMM (generally initiated by asserting the SMI# pin). The priorities of the FLUSH# and SMI# pins are such that the FLUSH# is serviced first. To guarantee this behavior, the processor requires that the following constraints on the interaction of FLUSH# and SMI# be met. In a system where the FLUSH# and SMI# pins are synchronous and the set up and hold times are met, then the FLUSH# and SMI# pins may be asserted in the same clock. In asynchronous systems, the FLUSH# pin must be asserted at least one clock before the SMI# pin to guarantee that the FLUSH# pin is serviced first.

Upon leaving SMM (for systems that explicitly flush the caches), the WBINVD instruction should be executed prior to leaving SMM to flush the caches.

NOTES

In systems based on the Pentium processor that use the FLUSH# pin to write back and invalidate cache contents before entering SMM, the processor will prefetch at least one cache line in between when the Flush Acknowledge cycle is run and the subsequent recognition of SMI# and the assertion of SMIACT#.

It is the obligation of the system to ensure that these lines are not cached by returning KEN# inactive to the Pentium processor.

32.4.2.1 System Management Range Registers (SMRR)

SMI handler code and data stored by SMM code resides in SMRAM. The SMRR interface is an enhancement in Intel 64 architecture to limit cacheable reference of addresses in SMRAM to code running in SMM. The SMRR interface can be configured only by code running in SMM. Details of SMRR is described in Section 12.11.2.4.

32.5 SMI HANDLER EXECUTION ENVIRONMENT

Section 32.5.1 describes the initial execution environment for an SMI handler. An SMI handler may re-configure its execution environment to other supported operating modes. Section 32.5.2 discusses modifications an SMI handler can make to its execution environment. Section 32.5.3 discusses Control-flow Enforcement Technology (CET) interactions in the environment.

32.5.1 Initial SMM Execution Environment

After saving the current context of the processor, the processor initializes its core registers to the values shown in Table 32-4. Upon entering SMM, the PE and PG flags in control register CR0 are cleared, which places the processor in an environment similar to real-address mode. The differences between the SMM execution environment and the real-address mode execution environment are as follows:

- The addressable address space ranges from 0 to FFFFFFFFH (4 GBytes).
- The normal 64-KByte segment limit for real-address mode is increased to 4 GBytes.
- The default operand and address sizes are set to 16 bits, which restricts the addressable SMRAM address space to the 1-MByte real-address mode limit for native real-address-mode code. However, operand-size and address-size override prefixes can be used to access the address space beyond the 1-MByte.

Table 32-4. Processor Register Initialization in SMM

Register	Contents
General-purpose registers	Undefined
EFLAGS	00000002H
EIP	00008000H
CS selector	SMM Base shifted right 4 bits (default 3000H)

Table 32-4. Processor Register Initialization in SMM

CS base	SMM Base (default 30000H)
DS, ES, FS, GS, SS Selectors	0000H
DS, ES, FS, GS, SS Bases	000000000H
DS, ES, FS, GS, SS Limits	0FFFFFFFFH
CR0	PE, EM, TS, and PG flags set to 0; others unmodified
CR4	Cleared to zero
DR6	Undefined
DR7	00000400H

- Near jumps and calls can be made to anywhere in the 4-GByte address space if a 32-bit operand-size override prefix is used. Due to the real-address-mode style of base-address formation, a far call or jump cannot transfer control to a segment with a base address of more than 20 bits (1 MByte). However, since the segment limit in SMM is 4 GBytes, offsets into a segment that go beyond the 1-MByte limit are allowed when using 32-bit operand-size override prefixes. Any program control transfer that does not have a 32-bit operand-size override prefix truncates the EIP value to the 16 low-order bits.
- Data and the stack can be located anywhere in the 4-GByte address space, but can be accessed only with a 32-bit address-size override if they are located above 1 MByte. As with the code segment, the base address for a data or stack segment cannot be more than 20 bits.

The value in segment register CS is automatically set to the default of 30000H for the SMBASE shifted 4 bits to the right; that is, 3000H. The EIP register is set to 8000H. When the EIP value is added to shifted CS value (the SMBASE), the resulting linear address points to the first instruction of the SMI handler.

The other segment registers (DS, SS, ES, FS, and GS) are cleared to 0 and their segment limits are set to 4 GBytes. In this state, the SMRAM address space may be treated as a single flat 4-GByte linear address space. If a segment register is loaded with a 16-bit value, that value is then shifted left by 4 bits and loaded into the segment base (hidden part of the segment register). The limits and attributes are not modified.

Maskable hardware interrupts, exceptions, NMI interrupts, SMI interrupts, A20M interrupts, single-step traps, breakpoint traps, and INIT operations are inhibited when the processor enters SMM. Maskable hardware interrupts, exceptions, single-step traps, and breakpoint traps can be enabled in SMM if the SMM execution environment provides and initializes an interrupt table and the necessary interrupt and exception handlers (see Section 32.6).

32.5.2 SMI Handler Operating Mode Switching

Within SMM, an SMI handler may change the processor's operating mode (e.g., to enable PAE paging, enter 64-bit mode, etc.) after it has made proper preparation and initialization to do so. For example, if switching to 32-bit protected mode, the SMI handler should follow the guidelines provided in Chapter 10, “Processor Management and Initialization”. If the SMI handler does wish to change operating mode, it is responsible for executing the appropriate mode-transition code after each SMI.

It is recommended that the SMI handler make use of all means available to protect the integrity of its critical code and data. In particular, it should use the system-management range register (SMRR) interface if it is available (see Section 11.11.2.4). The SMRR interface can protect only the first 4 GBytes of the physical address space. The SMI handler should take that fact into account if it uses operating modes that allow access to physical addresses beyond that 4-GByte limit (e.g., PAE paging or 64-bit mode).

Execution of the RSM instruction restores the pre-SMI processor state from the SMRAM state-state map (see Section 32.4.1) into which it was stored when the processor entered SMM. (The SMBASE field in the SMRAM state-save map does not determine the state following RSM but rather the initial environment following the next entry to SMM.) Any required change to operating mode is performed by the RSM instruction; there is no need for the SMI handler to change modes explicitly prior to executing RSM.

32.5.3 Control-flow Enforcement Technology Interactions

On processors that support CET shadow stacks, when the processor enters SMM, the processor saves the SSP register to the SMRAM state save area (see Table 32-3) and clears CR4.CET to 0. Thus, the initial execution environment of the SMI handler has CET disabled and all of the CET state of the interrupted program is still in the machine. An SMM that uses CET is required to save the interrupted program's CET state and restore the CET state prior to exiting SMM.

32.6 EXCEPTIONS AND INTERRUPTS WITHIN SMM

When the processor enters SMM, all hardware interrupts are disabled in the following manner:

- The IF flag in the EFLAGS register is cleared, which inhibits maskable hardware interrupts from being generated.
- The TF flag in the EFLAGS register is cleared, which disables single-step traps.
- Debug register DR7 is cleared, which disables breakpoint traps. (This action prevents a debugger from accidentally breaking into an SMI handler if a debug breakpoint is set in normal address space that overlays code or data in SMRAM.)
- NMI, SMI, and A20M interrupts are blocked by internal SMM logic. (See Section 32.8 for more information about how NMIs are handled in SMM.)

Software-invoked interrupts and exceptions can still occur, and maskable hardware interrupts can be enabled by setting the IF flag. Intel recommends that SMM code be written in so that it does not invoke software interrupts (with the INT *n*, INTO, INT1, INT3, or BOUND instructions) or generate exceptions.

If the SMI handler requires interrupt and exception handling, an SMM interrupt table and the necessary exception and interrupt handlers must be created and initialized from within SMM. Until the interrupt table is correctly initialized (using the LIDT instruction), exceptions and software interrupts will result in unpredictable processor behavior.

The following restrictions apply when designing SMM interrupt and exception-handling facilities:

- The interrupt table should be located at linear address 0 and must contain real-address mode style interrupt vectors (4 bytes containing CS and IP).
- Due to the real-address mode style of base address formation, an interrupt or exception cannot transfer control to a segment with a base address of more that 20 bits.
- An interrupt or exception cannot transfer control to a segment offset of more than 16 bits (64 KBytes).
- When an exception or interrupt occurs, only the 16 least-significant bits of the return address (EIP) are pushed onto the stack. If the offset of the interrupted procedure is greater than 64 KBytes, it is not possible for the interrupt/exception handler to return control to that procedure. (One solution to this problem is for a handler to adjust the return address on the stack.)
- The SMBASE relocation feature affects the way the processor will return from an interrupt or exception generated while the SMI handler is executing. For example, if the SMBASE is relocated to above 1 MByte, but the exception handlers are below 1 MByte, a normal return to the SMI handler is not possible. One solution is to provide the exception handler with a mechanism for calculating a return address above 1 MByte from the 16-bit return address on the stack, then use a 32-bit far call to return to the interrupted procedure.
- If an SMI handler needs access to the debug trap facilities, it must ensure that an SMM accessible debug handler is available and save the current contents of debug registers DR0 through DR3 (for later restoration). Debug registers DR0 through DR3 and DR7 must then be initialized with the appropriate values.
- If an SMI handler needs access to the single-step mechanism, it must ensure that an SMM accessible single-step handler is available, and then set the TF flag in the EFLAGS register.
- If the SMI design requires the processor to respond to maskable hardware interrupts or software-generated interrupts while in SMM, it must ensure that SMM accessible interrupt handlers are available and then set the IF flag in the EFLAGS register (using the STI instruction). Software interrupts are not blocked upon entry to SMM, so they do not need to be enabled.

32.7 MANAGING SYNCHRONOUS AND ASYNCHRONOUS SYSTEM MANAGEMENT INTERRUPTS

When coding for a multiprocessor system or a system with Intel HT Technology, it was not always possible for an SMI handler to distinguish between a synchronous SMI (triggered during an I/O instruction) and an asynchronous SMI. To facilitate the discrimination of these two events, incremental state information has been added to the SMM state save map.

Processors that have an SMM revision ID of 30004H or higher have the incremental state information described below.

32.7.1 I/O State Implementation

Within the extended SMM state save map, a bit (IO_SMI) is provided that is set only when an SMI is either taken immediately after a *successful* I/O instruction or is taken after a *successful* iteration of a REP I/O instruction (the *successful* notion pertains to the processor point of view; not necessarily to the corresponding platform function). When set, the IO_SMI bit provides a strong indication that the corresponding SMI was synchronous. In this case, the SMM State Save Map also supplies the port address of the I/O operation. The IO_SMI bit and the I/O Port Address may be used in conjunction with the information logged by the platform to confirm that the SMI was indeed synchronous.

The IO_SMI bit by itself is a strong indication, not a guarantee, that the SMI is synchronous. This is because an asynchronous SMI might coincidentally be taken after an I/O instruction. In such a case, the IO_SMI bit would still be set in the SMM state save map.

Information characterizing the I/O instruction is saved in two locations in the SMM State Save Map (Table 32-5). The IO_SMI bit also serves as a valid bit for the rest of the I/O information fields. The contents of these I/O information fields are not defined when the IO_SMI bit is not set.

Table 32-5. I/O Instruction Information in the SMM State Save Map

State (SMM Rev. ID: 30004H or higher)	Format				
	31 16	15 8	7 4	3 1	0
I/O State Field SMRAM offset 7FA4	I/O Port	Reserved	I/O Type	I/O Length	IO_SMI
	31				0
I/O Memory Address Field SMRAM offset 7FA0	I/O Memory Address				

When IO_SMI is set, the other fields may be interpreted as follows:

- I/O length:
  - 001 – Byte
  - 010 – Word
  - 100 – Dword
- I/O instruction type (Table 32-6)

Table 32-6. I/O Instruction Type Encodings

Instruction	Encoding
IN Immediate	1001
IN DX	0001
OUT Immediate	1000

Table 32-6. I/O Instruction Type Encodings (Contd.)

Instruction	Encoding
OUT DX	0000
INS	0011
OUTS	0010
REP INS	0111
REP OUTS	0110

32.8 NMI HANDLING WHILE IN SMM

NMI interrupts are blocked upon entry to the SMI handler. If an NMI request occurs during the SMI handler, it is latched and serviced after the processor exits SMM. Only one NMI request will be latched during the SMI handler. If an NMI request is pending when the processor executes the RSM instruction, the NMI is serviced before the next instruction of the interrupted code sequence. This assumes that NMIs were not blocked before the SMI occurred. If NMIs were blocked before the SMI occurred, they are blocked after execution of RSM.

Although NMI requests are blocked when the processor enters SMM, they may be enabled through software by executing an IRET instruction. If the SMI handler requires the use of NMI interrupts, it should invoke a dummy interrupt service routine for the purpose of executing an IRET instruction. Once an IRET instruction is executed, NMI interrupt requests are serviced in the same "real mode" manner in which they are handled outside of SMM.

Also, for the Pentium processor, exceptions that invoke a trap or fault handler will enable NMI interrupts from inside of SMM. This behavior is implementation specific for the Pentium processor and is not part of the IA-32 architecture.

32.9 SMM REVISION IDENTIFIER

The SMM revision identifier field is used to indicate the version of SMM and the SMM extensions that are supported by the processor (see Figure 32-2). The SMM revision identifier is written during SMM entry and can be examined in SMRAM space at offset 7EFCH. The lower word of the SMM revision identifier refers to the version of the base SMM architecture.

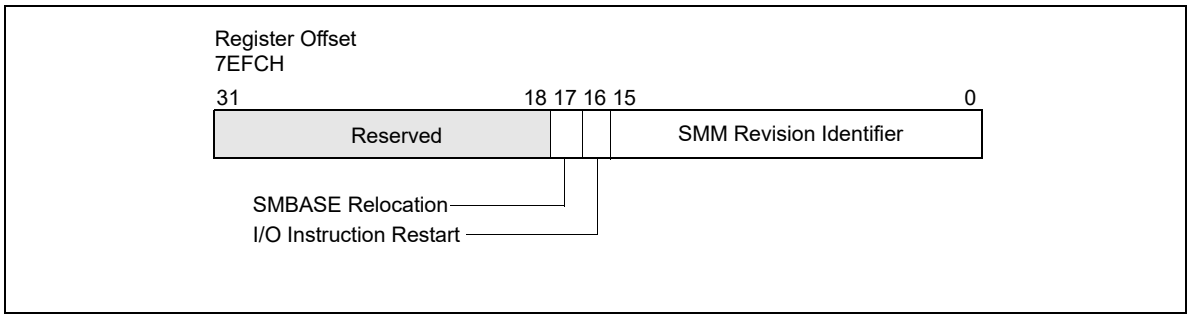

Figure 32-2. SMM Revision Identifier

The upper word of the SMM revision identifier refers to the extensions available. If the I/O instruction restart flag (bit 16) is set, the processor supports the I/O instruction restart (see Section 32.12); if the SMBASE relocation flag (bit 17) is set, SMRAM base address relocation is supported (see Section 32.11).

32.10 AUTO HALT RESTART

If the processor is in a HALT state (due to the prior execution of a HLT instruction) when it receives an SMI, the processor records the fact in the auto HALT restart flag in the saved processor state (see Figure 32-3). (This flag is located at offset 7F02H and bit 0 in the state save area of the SMRAM.)

If the processor sets the auto HALT restart flag upon entering SMM (indicating that the SMI occurred when the processor was in the HALT state), the SMI handler has two options:

- It can leave the auto HALT restart flag set, which instructs the RSM instruction to return program control to the HLT instruction. This option in effect causes the processor to re-enter the HALT state after handling the SMI. (This is the default operation.)
- It can clear the auto HALT restart flag, which instructs the RSM instruction to return program control to the instruction following the HLT instruction.

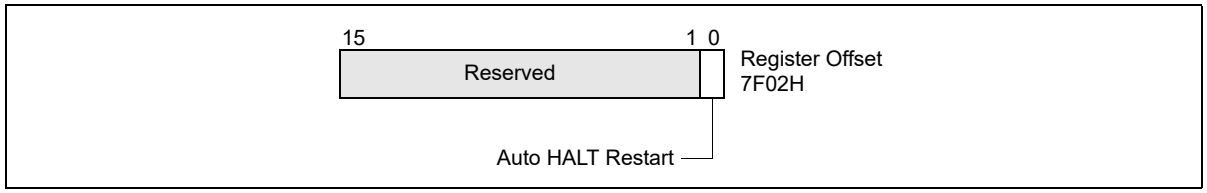

Figure 32-3. Auto HALT Restart Field

These options are summarized in Table 32-7. If the processor was not in a HALT state when the SMI was received (the auto HALT restart flag is cleared), setting the flag to 1 will cause unpredictable behavior when the RSM instruction is executed.

Table 32-7. Auto HALT Restart Flag Values

Value of Flag After Entry to SMM	Value of Flag When Exiting SMM	Action of Processor When Exiting SMM
0	0	Returns to next instruction in interrupted program or task.
0	1	Unpredictable.
1	0	Returns to next instruction after HLT instruction.
1	1	Returns to HALT state.

If the HLT instruction is restarted, the processor will generate a memory access to fetch the HLT instruction (if it is not in the internal cache), and execute a HLT bus transaction. This behavior results in multiple HLT bus transactions for the same HLT instruction.

32.10.1 Executing the HLT Instruction in SMM

The HLT instruction should not be executed during SMM, unless interrupts have been enabled by setting the IF flag in the EFLAGS register. If the processor is halted in SMM, the only event that can remove the processor from this state is a maskable hardware interrupt or a hardware reset.

32.11 SMBASE RELOCATION

The default base address for the SMRAM is 30000H. This value is contained in an internal processor register called the SMBASE register. The operating system or executive can relocate the SMRAM by setting the SMBASE field in the saved state map (at offset 7EF8H) to a new value (see Figure 32-4). The RSM instruction reloads the internal SMBASE register with the value in the SMBASE field each time it exits SMM. All subsequent SMI requests will use the new SMBASE value to find the starting address for the SMI handler (at SMBASE + 8000H) and the SMRAM state

save area (from SMBASE + FE00H to SMBASE + FFFFH). (The processor resets the value in its internal SMBASE register to 30000H on a RESET, but does not change it on an INIT.)

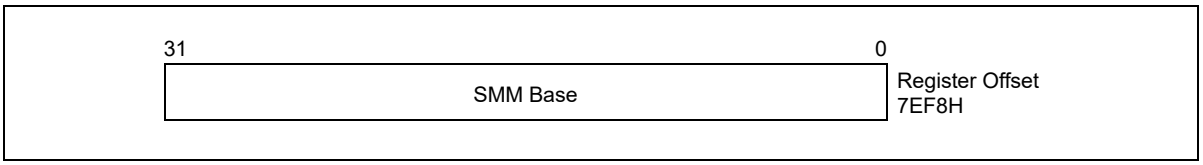

Figure 32-4. SMBASE Relocation Field

In multiple-processor systems, initialization software must adjust the SMBASE value for each processor so that the SMRAM state save areas for each processor do not overlap. (For Pentium and Intel486 processors, the SMBASE values must be aligned on a 32-KByte boundary or the processor will enter shutdown state during the execution of a RSM instruction.)

If the SMBASE relocation flag in the SMM revision identifier field is set, it indicates the ability to relocate the SMBASE (see Section 32.9).

32.12 I/O INSTRUCTION RESTART

If the I/O instruction restart flag in the SMM revision identifier field is set (see Section 32.9), the I/O instruction restart mechanism is present on the processor. This mechanism allows an interrupted I/O instruction to be re-executed upon returning from SMM mode. For example, if an I/O instruction is used to access a powered-down I/O device, a chipset supporting this device can intercept the access and respond by asserting SMI#. This action invokes the SMI handler to power-up the device. Upon returning from the SMI handler, the I/O instruction restart mechanism can be used to re-execute the I/O instruction that caused the SMI.

The I/O instruction restart field (at offset 7F00H in the SMM state-save area, see Figure 32-5) controls I/O instruction restart. When an RSM instruction is executed, if this field contains the value FFH, then the EIP register is modified to point to the I/O instruction that received the SMI request. The processor will then automatically re-execute the I/O instruction that the SMI trapped. (The processor saves the necessary machine state to ensure that re-execution of the instruction is handled coherently.)

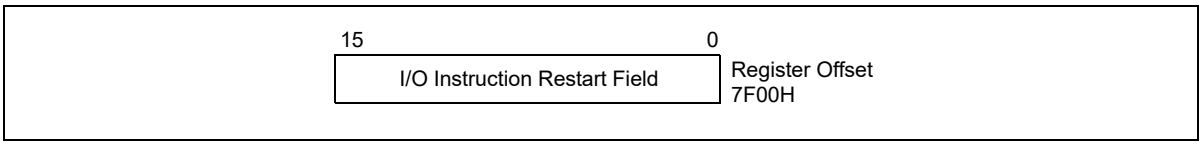

Figure 32-5. I/O Instruction Restart Field

If the I/O instruction restart field contains the value 00H when the RSM instruction is executed, then the processor begins program execution with the instruction following the I/O instruction. (When a repeat prefix is being used, the next instruction may be the next I/O instruction in the repeat loop.) Not re-executing the interrupted I/O instruction is the default behavior; the processor automatically initializes the I/O instruction restart field to 00H upon entering SMM. Table 32-8 summarizes the states of the I/O instruction restart field.

Table 32-8. I/O Instruction Restart Field Values

Value of Flag After Entry to SMM	Value of Flag When Exiting SMM	Action of Processor When Exiting SMM
00H	00H	Does not re-execute trapped I/O instruction.
00H	FFH	Re-executes trapped I/O instruction.

The I/O instruction restart mechanism does not indicate the cause of the SMI. It is the responsibility of the SMI handler to examine the state of the processor to determine the cause of the SMI and to determine if an I/O instruction was interrupted and should be restarted upon exiting SMM. If an SMI interrupt is signaled on a non-I/O instruction boundary, setting the I/O instruction restart field to FFH prior to executing the RSM instruction will likely result in a program error.

32.12.1 Back-to-Back SMI Interrupts When I/O Instruction Restart Is Being Used

If an SMI interrupt is signaled while the processor is servicing an SMI interrupt that occurred on an I/O instruction boundary, the processor will service the new SMI request before restarting the originally interrupted I/O instruction. If the I/O instruction restart field is set to FFH prior to returning from the second SMI handler, the EIP will point to an address different from the originally interrupted I/O instruction, which will likely lead to a program error. To avoid this situation, the SMI handler must be able to recognize the occurrence of back-to-back SMI interrupts when I/O instruction restart is being used and ensure that the handler sets the I/O instruction restart field to 00H prior to returning from the second invocation of the SMI handler.

32.13 SMM MULTIPLE-PROCESSOR CONSIDERATIONS

The following should be noted when designing multiple-processor systems:

- Any processor in a multiprocessor system can respond to an SMI.
- Each processor needs its own SMRAM space. This space can be in system memory or in a separate RAM.
- The SMRAMs for different processors can be overlapped in the same memory space. The only stipulation is that each processor needs its own state save area and its own dynamic data storage area. (Also, for the Pentium and Intel486 processors, the SMBASE address must be located on a 32-KByte boundary.) Code and static data can be shared among processors. Overlapping SMRAM spaces can be done more efficiently with the P6 family processors because they do not require that the SMBASE address be on a 32-KByte boundary.
- The SMI handler will need to initialize the SMBASE for each processor.
- Processors can respond to local SMIs through their SMI# pins or to SMIs received through the APIC interface. The APIC interface can distribute SMIs to different processors.
- Two or more processors can be executing in SMM at the same time.
- When operating Pentium processors in dual processing (DP) mode, the SMIACT# pin is driven only by the MRM processor and should be sampled with ADS#. For additional details, see Chapter 14 of the *Pentium Processor Family User's Manual, Volume 1*.

SMM is not re-entrant, because the SMRAM State Save Map is fixed relative to the SMBASE. If there is a need to support two or more processors in SMM mode at the same time then each processor should have dedicated SMRAM spaces. This can be done by using the SMBASE Relocation feature (see Section 32.11).

32.14 DEFAULT TREATMENT OF SMIS AND SMM WITH VMX OPERATION AND SMX OPERATION

Under the default treatment, the interactions of SMIs and SMM with VMX operation are few. This section details those interactions. It also explains how this treatment affects SMX operation.

32.14.1 Default Treatment of SMI Delivery

Ordinary SMI delivery saves processor state into SMRAM and then loads state based on architectural definitions. Under the default treatment, processors that support VMX operation perform SMI delivery as follows:

```
enter SMM;
save the following internal to the processor:
    CR4.VMXE
    an indication of whether the logical processor was in VMX operation (root or non-root)
IF the logical processor is in VMX operation
    THEN
        save current VMCS pointer internal to the processor;
        leave VMX operation;
        save VMX-critical state defined below;
FI;
IF the logical processor supports SMX operation
    THEN
        save internal to the logical processor an indication of whether the Intel® TXT private space is locked;
        IF the TXT private space is unlocked
            THEN lock the TXT private space;
        FI;
FI;
CR4.VMXE := 0;
perform ordinary SMI delivery:
    save processor state in SMRAM;
    set processor state to standard SMM values;[1]
    invalidate linear mappings and combined mappings associated with VPID 0000H (for all PCIDs); combined mappings for VPID 0000H
are invalidated for all EP4TA values (EP4TA is the value of bits 51:12 of EPTP; see Section 29.4);
```

The pseudocode above makes reference to the saving of **VMX-critical state**. This state consists of the following: (1) SS.DPL (the current privilege level); (2) RFLAGS.VM[2]; (3) the state of blocking by STI and by MOV SS (see Table 25-3 in Section 25.4.2); (4) the state of virtual-NMI blocking (only if the processor is in VMX non-root operation and the "virtual NMIs" VM-execution control is 1); and (5) an indication of whether an MTF VM exit is pending (see Section 26.5.2). These data may be saved internal to the processor or in the VMCS region of the current VMCS. Processors that do not support SMI recognition while there is blocking by STI or by MOV SS need not save the state of such blocking.

If the logical processor supports the 1-setting of the "enable EPT" VM-execution control and the logical processor was in VMX non-root operation at the time of an SMI, it saves the value of that control into bit 0 of the 32-bit field at offset SMBASE + 8000H + 7EE0H (SMBASE + FEE0H; see Table 32-3).[3] If the logical processor was not in VMX non-root operation at the time of the SMI, it saves 0 into that bit. If the logical processor saves 1 into that bit (it was in VMX non-root operation and the "enable EPT" VM-execution control was 1), it saves the value of the EPT pointer (EPTP) into the 64-bit field at offset SMBASE + 8000H + 7ED8H (SMBASE + FED8H).

Because SMI delivery causes a logical processor to leave VMX operation, all the controls associated with VMX non-root operation are disabled in SMM and thus cannot cause VM exits while the logical processor in SMM.

---

1. This causes the logical processor to block INIT signals, NMIs, and SMIs.
2. Section 32.14 and Section 32.15 use the notation RAX, RIP, RSP, RFLAGS, etc. for processor registers because most processors that support VMX operation also support Intel 64 architecture. For processors that do not support Intel 64 architecture, this notation refers to the 32-bit forms of these registers (EAX, EIP, ESP, EFLAGS, etc.). In a few places, notation such as EAX is used to refer specifically to the lower 32 bits of the register.
3. "Enable EPT" is a secondary processor-based VM-execution control. If bit 31 of the primary processor-based VM-execution controls is 0, SMI functions as the "enable EPT" VM-execution control were 0. See Section 25.6.2.

32.14.2 Default Treatment of RSM

Ordinary execution of RSM restores processor state from SMRAM. Under the default treatment, processors that support VMX operation perform RSM as follows:

```
IF VMXE = 1 in CR4 image in SMRAM
    THEN fail and enter shutdown state;
    ELSE
        restore state normally from SMRAM;
        invalidate linear mappings and combined mappings associated with all VPIDs and all PCIDs; combined mappings are invalidated
for all EP4TA values (EP4TA is the value of bits 51:12 of EPTP; see Section 29.4);
        IF the logical processor supports SMX operation andthe Intel® TXT private space was unlocked at the time of the last SMI (as
saved)
            THEN unlock the TXT private space;
        FI;
        CR4.VMXE := value stored internally;
        IF internal storage indicates that the logical processor
        had been in VMX operation (root or non-root)
            THEN
                enter VMX operation (root or non-root);
                restore VMX-critical state as defined in Section 32.14.1;
                set to their fixed values any bits in CR0 and CR4 whose values must be fixed in VMX operation (see Section 24.8);[1]
                IF RFLAGS.VM = 0 AND (in VMX root operation OR the "unrestricted guest" VM-execution control is 0)[2]
                    THEN
                        CS.RPL := SS.DPL;
                        SS.RPL := SS.DPL;
                FI;
                restore current VMCS pointer;
        FI;
        leave SMM;
        IF logical processor will be in VMX operation or in SMX operation after RSM
            THEN block A20M and leave A20M mode;
        FI;
FI;
```

RSM unblocks SMIs. It restores the state of blocking by NMI (see Table 25-3 in Section 25.4.2) as follows:

- If the RSM is not to VMX non-root operation or if the "virtual NMIs" VM-execution control will be 0, the state of NMI blocking is restored normally.
- If the RSM is to VMX non-root operation and the "virtual NMIs" VM-execution control will be 1, NMIs are not blocked after RSM. The state of virtual-NMI blocking is restored as part of VMX-critical state.

INIT signals are blocked after RSM if and only if the logical processor will be in VMX root operation.

If RSM returns a logical processor to VMX non-root operation, it re-establishes the controls associated with the current VMCS. If the "interrupt-window exiting" VM-execution control is 1, a VM exit occurs immediately after RSM if the enabling conditions apply. The same is true for the "NMI-window exiting" VM-execution control. Such VM exits occur with their normal priority. See Section 26.2.

If an MTF VM exit was pending at the time of the previous SMI, an MTF VM exit is pending on the instruction boundary following execution of RSM. The following items detail the treatment of MTF VM exits that may be pending following RSM:

---

1. If the RSM is to VMX non-root operation and both the "unrestricted guest" VM-execution control and bit 31 of the primary processor-based VM-execution controls will be 1, CR0.PE and CR0.PG retain the values that were loaded from SMRAM regardless of what is reported in the capability MSR IA32_VMX_CR0_FIXED0.
2. "Unrestricted guest" is a secondary processor-based VM-execution control. If bit 31 of the primary processor-based VM-execution controls is 0, VM entry functions as if the "unrestricted guest" VM-execution control were 0. See Section 25.6.2.

- System-management interrupts (SMIs), INIT signals, and higher priority events take priority over these MTF VM exits. These MTF VM exits take priority over debug-trap exceptions and lower priority events.
- These MTF VM exits wake the logical processor if RSM caused the logical processor to enter the HLT state (see Section 32.10). They do not occur if the logical processor just entered the shutdown state.

32.14.3 Protection of CR4.VMXE in SMM

Under the default treatment, CR4.VMXE is treated as a reserved bit while a logical processor is in SMM. Any attempt by software running in SMM to set this bit causes a general-protection exception. In addition, software cannot use VMX instructions or enter VMX operation while in SMM.

32.14.4 VMXOFF and SMI Unblocking

The VMXOFF instruction can be executed only with the default treatment (see Section 32.15.1) and only outside SMM. If SMIs are blocked when VMXOFF is executed, VMXOFF unblocks them unless IA32_SMM_MONITOR_CTL[bit 2] is 1 (see Section 32.15.5 for details regarding this MSR).[1] Section 32.15.7 identifies a case in which SMIs may be blocked when VMXOFF is executed.

Not all processors allow this bit to be set to 1. Software should consult the VMX capability MSR IA32_VMX_MISC (see Appendix A.6) to determine whether this is allowed.

32.15 DUAL-MONITOR TREATMENT OF SMIs AND SMM

Dual-monitor treatment is activated through the cooperation of the **executive monitor** (the VMM that operates outside of SMM to provide basic virtualization) and the **SMM-transfer monitor** (**STM**; the VMM that operates inside SMM—while in VMX operation—to support system-management functions). Control is transferred to the STM through VM exits; VM entries are used to return from SMM.

The dual-monitor treatment may not be supported by all processors. Software should consult the VMX capability MSR IA32_VMX_BASIC (see Appendix A.1) to determine whether it is supported.

32.15.1 Dual-Monitor Treatment Overview

The dual-monitor treatment uses an executive monitor and an SMM-transfer monitor (STM). Transitions from the executive monitor or its guests to the STM are called **SMM VM exits** and are discussed in Section 32.15.2. SMM VM exits are caused by SMIs as well as executions of VMCALL in VMX root operation. The latter allow the executive monitor to call the STM for service.

The STM runs in VMX root operation and uses VMX instructions to establish a VMCS and perform VM entries to its own guests. This is done all inside SMM (see Section 32.15.3). The STM returns from SMM, not by using the RSM instruction, but by using a VM entry that returns from SMM. Such VM entries are described in Section 32.15.4.

Initially, there is no STM and the default treatment (Section 32.14) is used. The dual-monitor treatment is not used until it is enabled and activated. The steps to do this are described in Section 32.15.5 and Section 32.15.6.

It is not possible to leave VMX operation under the dual-monitor treatment; VMXOFF will fail if executed. The dual-monitor treatment must be deactivated first. The STM deactivates dual-monitor treatment using a VM entry that returns from SMM with the "deactivate dual-monitor treatment" VM-entry control set to 1 (see Section 32.15.7).

The executive monitor configures any VMCS that it uses for VM exits to the executive monitor. SMM VM exits, which transfer control to the STM, use a different VMCS. Under the dual-monitor treatment, each logical processor uses a separate VMCS called the **SMM-transfer VMCS**. When the dual-monitor treatment is active, the logical processor maintains another VMCS pointer called the **SMM-transfer VMCS pointer**. The SMM-transfer VMCS pointer is established when the dual-monitor treatment is activated.

1. Setting IA32_SMM_MONITOR_CTL[bit 2] to 1 prevents VMXOFF from unblocking SMIs regardless of the value of the register's valid bit (bit 0).

32.15.2 SMM VM Exits

An SMM VM exit is a VM exit that begins outside SMM and that ends in SMM.

Unlike other VM exits, SMM VM exits can begin in VMX root operation. SMM VM exits result from the arrival of an SMI outside SMM or from execution of VMCALL in VMX root operation outside SMM. Execution of VMCALL in VMX root operation causes an SMM VM exit only if the valid bit is set in the IA32_SMM_MONITOR_CTL MSR (see Section 32.15.5).

Execution of VMCALL in VMX root operation causes an SMM VM exit even under the default treatment. This SMM VM exit activates the dual-monitor treatment (see Section 32.15.6).

Differences between SMM VM exits and other VM exits are detailed in Sections 32.15.2.1 through 32.15.2.5. Differences between SMM VM exits that activate the dual-monitor treatment and other SMM VM exits are described in Section 32.15.6.

32.15.2.1 Architectural State Before a VM Exit

System-management interrupts (SMIs) that cause SMM VM exits always do so directly. They do not save state to SMRAM as they do under the default treatment.

32.15.2.2 Updating the Current-VMCS and Executive-VMCS Pointers

SMM VM exits begin by performing the following steps:

1. The executive-VMCS pointer field in the SMM-transfer VMCS is loaded as follows:
   — If the SMM VM exit commenced in VMX non-root operation, it receives the current-VMCS pointer.
   — If the SMM VM exit commenced in VMX root operation, it receives the VMXON pointer.
2. The current-VMCS pointer is loaded with the value of the SMM-transfer VMCS pointer.

The last step ensures that the current VMCS is the SMM-transfer VMCS. VM-exit information is recorded in that VMCS, and VM-entry control fields in that VMCS are updated. State is saved into the guest-state area of that VMCS. The VM-exit controls and host-state area of that VMCS determine how the VM exit operates.

32.15.2.3 Recording VM-Exit Information

SMM VM exits differ from other VM exit with regard to the way they record VM-exit information. The differences follow.

- **Exit reason**.
  — Bits 15:0 of this field contain the basic exit reason. The field is loaded with the reason for the SMM VM exit: I/O SMI (an SMI arrived immediately after retirement of an I/O instruction), other SMI, or VMCALL. See Appendix C, “VMX Basic Exit Reasons”.
  — SMM VM exits are the only VM exits that may occur in VMX root operation. Because the SMM-transfer monitor may need to know whether it was invoked from VMX root or VMX non-root operation, this information is stored in bit 29 of the exit-reason field (see Table 25-17 in Section 25.9.1). The bit is set by SMM VM exits from VMX root operation.
  — If the SMM VM exit occurred in VMX non-root operation and an MTF VM exit was pending, bit 28 of the exit-reason field is set; otherwise, it is cleared.
  — Bits 27:16 and bits 31:30 are cleared.
- **Exit qualification.** For an SMM VM exit due an SMI that arrives immediately after the retirement of an I/O instruction, the exit qualification contains information about the I/O instruction that retired immediately before the SMI. It has the format given in Table 32-9.
- **Guest linear address.** This field is used for VM exits due to SMIs that arrive immediately after the retirement of an INS or OUTS instruction for which the relevant segment (ES for INS; DS for OUTS unless overridden by an instruction prefix) is usable. The field receives the value of the linear address generated by ES:(E)DI (for INS) or segment:(E)SI (for OUTS; the default segment is DS but can be overridden by a segment override

Table 32-9. Exit Qualification for SMIs That Arrive Immediately After the Retirement of an I/O Instruction

Bit Position(s)	Contents
2:0	Size of access: 0 = 1-byte 1 = 2-byte 3 = 4-byte Other values not used.
3	Direction of the attempted access (0 = OUT, 1 = IN)
4	String instruction (0 = not string; 1 = string)
5	REP prefixed (0 = not REP; 1 = REP)
6	Operand encoding (0 = DX, 1 = immediate)
15:7	Reserved (cleared to 0)
31:16	Port number (as specified in the I/O instruction)
63:32	Reserved (cleared to 0). These bits exist only on processors that support Intel 64 architecture.

prefix) at the time the instruction started. If the relevant segment is not usable, the value is undefined. On processors that support Intel 64 architecture, bits 63:32 are clear if the logical processor was not in 64-bit mode before the VM exit.

- **I/O RCX, I/O RSI, I/O RDI, and I/O RIP.** For an SMM VM exit due an SMI that arrives immediately after the retirement of an I/O instruction, these fields receive the values that were in RCX, RSI, RDI, and RIP, respectively, before the I/O instruction executed. Thus, the value saved for I/O RIP addresses the I/O instruction.

32.15.2.4 Saving Guest State

SMM VM exits save the contents of the SMBASE register into the corresponding field in the guest-state area.

The value of the VMX-preemption timer is saved into the corresponding field in the guest-state area if the "save VMX-preemption timer value" VM-exit control is 1. That field becomes undefined if, in addition, either the SMM VM exit is from VMX root operation or the SMM VM exit is from VMX non-root operation and the "activate VMX-preemption timer" VM-execution control is 0.

32.15.2.5 Updating State

If an SMM VM exit is from VMX non-root operation and the "Intel PT uses guest physical addresses" VM-execution control is 1, the IA32_RTIT_CTL MSR is cleared to 00000000_00000000H.[1] This is done even if the "clear IA32_RTIT_CTL" VM-exit control is 0.

SMM VM exits affect the non-register state of a logical processor as follows:

- SMM VM exits cause non-maskable interrupts (NMIs) to be blocked; they may be unblocked through execution of IRET or through a VM entry (depending on the value loaded for the interruptibility state and the setting of the "virtual NMIs" VM-execution control).
- SMM VM exits cause SMIs to be blocked; they may be unblocked by a VM entry that returns from SMM (see Section 32.15.4).

1. In this situation, the value of this MSR was saved earlier into the guest-state area. All VM exits save this MSR if the 1-setting of the "load IA32_RTIT_CTL" VM-entry control is supported (see Section 28.3.1), which must be the case if the "Intel PT uses guest physical addresses" VM-execution control is 1 (see Section 27.2.1.1).

SMM VM exits invalidate linear mappings and combined mappings associated with VPID 0000H for all PCIDs. Combined mappings for VPID 0000H are invalidated for all EP4TA values (EP4TA is the value of bits 51:12 of EPTP; see Section 29.4). (Ordinary VM exits are not required to perform such invalidation if the "enable VPID" VM-execution control is 1; see Section 28.5.5.)

32.15.3 Operation of the SMM-Transfer Monitor

Once invoked, the SMM-transfer monitor (STM) is in VMX root operation and can use VMX instructions to configure VMCSs and to cause VM entries to virtual machines supported by those structures. As noted in Section 32.15.1, the VMXOFF instruction cannot be used under the dual-monitor treatment and thus cannot be used by the STM.

The RSM instruction also cannot be used under the dual-monitor treatment. As noted in Section 26.1.3, it causes a VM exit if executed in SMM in VMX non-root operation. If executed in VMX root operation, it causes an invalid-opcode exception. The STM uses VM entries to return from SMM (see Section 32.15.4).

32.15.4 VM Entries that Return from SMM

The SMM-transfer monitor (STM) returns from SMM using a VM entry with the "entry to SMM" VM-entry control clear. VM entries that return from SMM reverse the effects of an SMM VM exit (see Section 32.15.2).

VM entries that return from SMM may differ from other VM entries in that they do not necessarily enter VMX non-root operation. If the executive-VMCS pointer field in the current VMCS contains the VMXON pointer, the logical processor remains in VMX root operation after VM entry.

For differences between VM entries that return from SMM and other VM entries see Sections 32.15.4.1 through 32.15.4.10.

32.15.4.1 Checks on the Executive-VMCS Pointer Field

VM entries that return from SMM perform the following checks on the executive-VMCS pointer field in the current VMCS:

- Bits 11:0 must be 0.
- The pointer must not set any bits beyond the processor's physical-address width.[1,2]
- The 32 bits located in memory referenced by the physical address in the pointer must contain the processor's VMCS revision identifier (see Section 25.2).

The checks above are performed before the checks described in Section 32.15.4.2 and before any of the following checks:

- 'If the "deactivate dual-monitor treatment" VM-entry control is 0 and the executive-VMCS pointer field does not contain the VMXON pointer, the launch state of the executive VMCS (the VMCS referenced by the executive-VMCS pointer field) must be launched (see Section 25.11.3).
- If the "deactivate dual-monitor treatment" VM-entry control is 1, the executive-VMCS pointer field must contain the VMXON pointer (see Section 32.15.7).[3]

32.15.4.2 Checks on VM-Execution Control Fields

VM entries that return from SMM differ from other VM entries with regard to the checks performed on the VM-execution control fields specified in Section 27.2.1.1. They do not apply the checks to the current VMCS. Instead, VM-entry behavior depends on whether the executive-VMCS pointer field contains the VMXON pointer:

---

1. Software can determine a processor's physical-address width by executing CPUID with 80000008H in EAX. The physical-address width is returned in bits 7:0 of EAX.
2. If IA32_VMX_BASIC[48] is read as 1, this pointer must not set any bits in the range 63:32; see Appendix A.1.
3. The STM can determine the VMXON pointer by reading the executive-VMCS pointer field in the current VMCS after the SMM VM exit that activates the dual-monitor treatment.

- If the executive-VMCS pointer field contains the VMXON pointer (the VM entry remains in VMX root operation), the checks are not performed at all.
- If the executive-VMCS pointer field does not contain the VMXON pointer (the VM entry enters VMX non-root operation), the checks are performed on the VM-execution control fields in the executive VMCS (the VMCS referenced by the executive-VMCS pointer field in the current VMCS). These checks are performed after checking the executive-VMCS pointer field itself (for proper alignment).

Other VM entries ensure that, if "activate VMX-preemption timer" VM-execution control is 0, the "save VMX-preemption timer value" VM-exit control is also 0. This check is not performed by VM entries that return from SMM.

32.15.4.3 Checks on VM-Entry Control Fields

VM entries that return from SMM differ from other VM entries with regard to the checks performed on the VM-entry control fields specified in Section 27.2.1.3.

Specifically, if the executive-VMCS pointer field contains the VMXON pointer (the VM entry remains in VMX root operation), the VM-entry interruption-information field must not indicate injection of a pending MTF VM exit (see Section 27.6.2). Specifically, the following cannot all be true for that field:

- the valid bit (bit 31) is 1
- the interruption type (bits 10:8) is 7 (other event); and
- the vector (bits 7:0) is 0 (pending MTF VM exit).

32.15.4.4 Checks on the Guest State Area

Section 27.3.1 specifies checks performed on fields in the guest-state area of the VMCS. Some of these checks are conditioned on the settings of certain VM-execution controls (e.g., "virtual NMIs" or "unrestricted guest"). VM entries that return from SMM modify these checks based on whether the executive-VMCS pointer field contains the VMXON pointer:[1]

- If the executive-VMCS pointer field contains the VMXON pointer (the VM entry remains in VMX root operation), the checks are performed as all relevant VM-execution controls were 0. (As a result, some checks may not be performed at all.)
- If the executive-VMCS pointer field does not contain the VMXON pointer (the VM entry enters VMX non-root operation), this check is performed based on the settings of the VM-execution controls in the executive VMCS (the VMCS referenced by the executive-VMCS pointer field in the current VMCS).

For VM entries that return from SMM, the activity-state field must not indicate the wait-for-SIPI state if the executive-VMCS pointer field contains the VMXON pointer (the VM entry is to VMX root operation).

32.15.4.5 Loading Guest State

VM entries that return from SMM load the SMBASE register from the SMBASE field.

VM entries that return from SMM invalidate linear mappings and combined mappings associated with all VPIDs. Combined mappings are invalidated for all EP4TA values (EP4TA is the value of bits 51:12 of EPTP; see Section 29.4). (Ordinary VM entries are required to perform such invalidation only for VPID 0000H and are not required to do even that if the "enable VPID" VM-execution control is 1; see Section 27.3.2.5.)

32.15.4.6 VMX-Preemption Timer

A VM entry that returns from SMM activates the VMX-preemption timer only if the executive-VMCS pointer field does not contain the VMXON pointer (the VM entry enters VMX non-root operation) and the "activate VMX-preemption timer" VM-execution control is 1 in the executive VMCS (the VMCS referenced by the executive-VMCS pointer field). In this case, VM entry starts the VMX-preemption timer with the value in the VMX-preemption timer-value field in the current VMCS.

1. The STM can determine the VMXON pointer by reading the executive-VMCS pointer field in the current VMCS after the SMM VM exit that activates the dual-monitor treatment.

32.15.4.7 Updating the Current-VMCS and SMM-Transfer VMCS Pointers

Successful VM entries (returning from SMM) load the SMM-transfer VMCS pointer with the current-VMCS pointer. Following this, they load the current-VMCS pointer from a field in the current VMCS:

- If the executive-VMCS pointer field contains the VMXON pointer (the VM entry remains in VMX root operation), the current-VMCS pointer is loaded from the VMCS-link pointer field.
- If the executive-VMCS pointer field does not contain the VMXON pointer (the VM entry enters VMX non-root operation), the current-VMCS pointer is loaded with the value of the executive-VMCS pointer field.

If the VM entry successfully enters VMX non-root operation, the VM-execution controls in effect after the VM entry are those from the new current VMCS. This includes any structures external to the VMCS referenced by VM-execution control fields.

The updating of these VMCS pointers occurs before event injection. Event injection is determined, however, by the VM-entry control fields in the VMCS that was current when the VM entry commenced.

32.15.4.8 VM Exits Induced by VM Entry

Section 27.6.1.2 describes how the event-delivery process invoked by event injection may lead to a VM exit. Section 27.7.3 to Section 27.7.7 describe other situations that may cause a VM exit to occur immediately after a VM entry.

Whether these VM exits occur is determined by the VM-execution control fields in the current VMCS. For VM entries that return from SMM, they can occur only if the executive-VMCS pointer field does not contain the VMXON pointer (the VM entry enters VMX non-root operation).

In this case, determination is based on the VM-execution control fields in the VMCS that is current after the VM entry. This is the VMCS referenced by the value of the executive-VMCS pointer field at the time of the VM entry (see Section 32.15.4.7). This VMCS also controls the delivery of such VM exits. Thus, VM exits induced by a VM entry returning from SMM are to the executive monitor and not to the STM.

32.15.4.9 SMI Blocking

VM entries that return from SMM determine the blocking of system-management interrupts (SMIs) as follows:

- If the "deactivate dual-monitor treatment" VM-entry control is 0, SMIs are blocked after VM entry if and only if the bit 2 in the interruptibility-state field is 1.
- If the "deactivate dual-monitor treatment" VM-entry control is 1, the blocking of SMIs depends on whether the logical processor is in SMX operation:[1]
  - — If the logical processor is in SMX operation, SMIs are blocked after VM entry.
  - — If the logical processor is outside SMX operation, SMIs are unblocked after VM entry.

VM entries that return from SMM and that do not deactivate the dual-monitor treatment may leave SMIs blocked. This feature exists to allow the STM to invoke functionality outside of SMM without unblocking SMIs.

32.15.4.10 Failures of VM Entries That Return from SMM

Section 27.8 describes the treatment of VM entries that fail during or after loading guest state. Such failures record information in the VM-exit information fields and load processor state as would be done on a VM exit. The VMCS used is the one that was current before the VM entry commenced. Control is thus transferred to the STM and the logical processor remains in SMM.

1. A logical processor is in SMX operation if GETSEC[SEXIT] has not been executed since the last execution of GETSEC[SENTER]. A logical processor is outside SMX operation if GETSEC[SENTER] has not been executed or if GETSEC[SEXIT] was executed after the last execution of GETSEC[SENTER]. See Chapter 7, "Safer Mode Extensions Reference," in the *Intel® 64 and IA-32 Architectures Software Developer's Manual, Volume 2D*.

32.15.5 Enabling the Dual-Monitor Treatment

Code and data for the SMM-transfer monitor (STM) reside in a region of SMRAM called the **monitor segment** (MSEG). Code running in SMM determines the location of MSEG and establishes its content. This code is also responsible for enabling the dual-monitor treatment.

SMM code enables the dual-monitor treatment and specifies the location of MSEG by writing to the IA32_SMM_MONITOR_CTL MSR (index 9BH). The MSR has the following format:

- Bit 0 is the register's valid bit. The STM may be invoked using VMCALL only if this bit is 1. Because VMCALL is used to activate the dual-monitor treatment (see Section 32.15.6), the dual-monitor treatment cannot be activated if the bit is 0. This bit is cleared when the logical processor is reset.
- Bit 1 is reserved.
- Bit 2 determines whether executions of VMXOFF unblock SMIs under the default treatment of SMIs and SMM. Executions of VMXOFF unblock SMIs unless bit 2 is 1 (the value of bit 0 is irrelevant). See Section 32.14.4.

  Certain leaf functions of the GETSEC instruction clear this bit (see Chapter 7, "Safer Mode Extensions Reference," in *Intel® 64 and IA-32 Architectures Software Developer's Manual, Volume 2D*).
- Bits 11:3 are reserved.
- Bits 31:12 contain a value that, when shifted left 12 bits, is the physical address of MSEG (the MSEG base address).
- Bits 63:32 are reserved.

The following items detail use of this MSR:

- The IA32_SMM_MONITOR_CTL MSR is supported only on processors that support the dual-monitor treatment.[1] On other processors, accesses to the MSR using RDMSR or WRMSR generate a general-protection fault (#GP(0)).
- A write to the IA32_SMM_MONITOR_CTL MSR using WRMSR generates a general-protection fault (#GP(0)) if executed outside of SMM or if an attempt is made to set any reserved bit. An attempt to write to the IA32_SMM_MONITOR_CTL MSR fails if made as part of a VM exit that does not end in SMM or part of a VM entry that does not begin in SMM.
- Reads from the IA32_SMM_MONITOR_CTL MSR using RDMSR are allowed any time RDMSR is allowed. The MSR may be read as part of any VM exit.
- The dual-monitor treatment can be activated only if the valid bit in the MSR is set to 1.

The 32 bytes located at the MSEG base address are called the **MSEG header**. The format of the MSEG header is given in Table 32-10 (each field is 32 bits).

Table 32-10. Format of MSEG Header

Byte Offset	Field
0	MSEG-header revision identifier
4	SMM-transfer monitor features
8	GDTR limit
12	GDTR base offset
16	CS selector
20	EIP offset
24	ESP offset
28	CR3 offset

1. Software should consult the VMX capability MSR IA32_VMX_BASIC (see Appendix A.1) to determine whether the dual-monitor treatment is supported.

To ensure proper behavior in VMX operation, software should maintain the MSEG header in writeback cacheable memory. Future implementations may allow or require a different memory type.[1] Software should consult the VMX capability MSR IA32_VMX_BASIC (see Appendix A.1).

SMM code should enable the dual-monitor treatment (by setting the valid bit in IA32_SMM_MONITOR_CTL MSR) only after establishing the content of the MSEG header as follows:

- Bytes 3:0 contain the **MSEG revision identifier**. Different processors may use different MSEG revision identifiers. These identifiers enable software to avoid using an MSEG header formatted for one processor on a processor that uses a different format. Software can discover the MSEG revision identifier that a processor uses by reading the VMX capability MSR IA32_VMX_MISC (see Appendix A.6).
- Bytes 7:4 contain the **SMM-transfer monitor features** field. Bits 31:1 of this field are reserved and must be zero. Bit 0 of the field is the **IA-32e mode SMM feature bit**. It indicates whether the logical processor will be in IA-32e mode after the STM is activated (see Section 32.15.6).
- Bytes 31:8 contain fields that determine how processor state is loaded when the STM is activated (see Section 32.15.6.5). SMM code should establish these fields so that activating of the STM invokes the STM's initialization code.

32.15.6 Activating the Dual-Monitor Treatment

The dual-monitor treatment may be enabled by SMM code as described in Section 32.15.5. The dual-monitor treatment is activated only if it is enabled and only by the executive monitor. The executive monitor activates the dual-monitor treatment by executing VMCALL in VMX root operation.

When VMCALL activates the dual-monitor treatment, it causes an SMM VM exit. Differences between this SMM VM exit and other SMM VM exits are discussed in Sections 32.15.6.1 through 32.15.6.6. See also "VMCALL—Call to VM Monitor" in Chapter 31.

32.15.6.1 Initial Checks

An execution of VMCALL attempts to activate the dual-monitor treatment if (1) the processor supports the dual-monitor treatment;[2] (2) the logical processor is in VMX root operation; (3) the logical processor is outside SMM and the valid bit is set in the IA32_SMM_MONITOR_CTL MSR; (4) the logical processor is not in virtual-8086 mode and not in compatibility mode; (5) CPL = 0; and (6) the dual-monitor treatment is not active.

Such an execution of VMCALL begins with some initial checks. These checks are performed before updating the current-VMCS pointer and the executive-VMCS pointer field (see Section 32.15.2.2).

The VMCS that manages SMM VM exit caused by this VMCALL is the current VMCS established by the executive monitor. The VMCALL performs the following checks on the current VMCS in the order indicated:

1. There must be a current VMCS pointer.
2. The launch state of the current VMCS must be clear.
3. Reserved bits in the VM-exit controls in the current VMCS must be set properly. Software may consult the VMX capability MSR IA32_VMX_EXIT_CTLS to determine the proper settings (see Appendix A.4).

If any of these checks fail, subsequent checks are skipped and VMCALL fails. If all these checks succeed, the logical processor uses the IA32_SMM_MONITOR_CTL MSR to determine the base address of MSEG. The following checks are performed in the order indicated:

1. The logical processor reads the 32 bits at the base of MSEG and compares them to the processor's MSEG revision identifier.

---

1. Alternatively, software may map the MSEG header with the UC memory type; this may be necessary, depending on how memory is organized. Doing so is strongly discouraged unless necessary as it will cause the performance of transitions using those structures to suffer significantly. In addition, the processor will continue to use the memory type reported in the VMX capability MSR IA32_VMX_BASIC with exceptions noted in Appendix A.1.
2. Software should consult the VMX capability MSR IA32_VMX_BASIC (see Appendix A.1) to determine whether the dual-monitor treatment is supported.

2. The logical processor reads the SMM-transfer monitor features field:
   — Bit 0 of the field is the IA-32e mode SMM feature bit, and it indicates whether the logical processor will be in IA-32e mode after the SMM-transfer monitor (STM) is activated.
     • If the VMCALL is executed on a processor that does not support Intel 64 architecture, the IA-32e mode SMM feature bit must be 0.
     • If the VMCALL is executed in 64-bit mode, the IA-32e mode SMM feature bit must be 1.
   — Bits 31:1 of this field are currently reserved and must be zero.

If any of these checks fail, subsequent checks are skipped and the VMCALL fails.

32.15.6.2 Updating the Current-VMCS and Executive-VMCS Pointers

Before performing the steps in Section 32.15.2.2, SMM VM exits that activate the dual-monitor treatment begin by loading the SMM-transfer VMCS pointer with the value of the current-VMCS pointer.

32.15.6.3 Saving Guest State

As noted in Section 32.15.2.4, SMM VM exits save the contents of the SMBASE register into the corresponding field in the guest-state area. While this is true also for SMM VM exits that activate the dual-monitor treatment, the VMCS used for those VM exits exists outside SMRAM.

The SMM-transfer monitor (STM) can also discover the current value of the SMBASE register by using the RDMSR instruction to read the IA32_SMBASE MSR (MSR address 9EH). The following items detail use of this MSR:

- The MSR is supported only if IA32_VMX_MISC[15] = 1 (see Appendix A.6).
- A write to the IA32_SMBASE MSR using WRMSR generates a general-protection fault (#GP(0)). An attempt to write to the IA32_SMBASE MSR fails if made as part of a VM exit or part of a VM entry.
- A read from the IA32_SMBASE MSR using RDMSR generates a general-protection fault (#GP(0)) if executed outside of SMM. An attempt to read from the IA32_SMBASE MSR fails if made as part of a VM exit that does not end in SMM.

32.15.6.4 Saving MSRs

The VM-exit MSR-store area is not used by SMM VM exits that activate the dual-monitor treatment. No MSRs are saved into that area.

32.15.6.5 Loading Host State

The VMCS that is current during an SMM VM exit that activates the dual-monitor treatment was established by the executive monitor. It does not contain the VM-exit controls and host state required to initialize the STM. For this reason, such SMM VM exits do not load processor state as described in Section 28.5. Instead, state is set to fixed values or loaded based on the content of the MSEG header (see Table 32-10):

- CR0 is set to as follows:
  — PG, NE, ET, MP, and PE are all set to 1.
  — CD and NW are left unchanged.
  — All other bits are cleared to 0.
- CR3 is set as follows:
  — Bits 63:32 are cleared on processors that support IA-32e mode.
  — Bits 31:12 are set to bits 31:12 of the sum of the MSEG base address and the CR3-offset field in the MSEG header.
  — Bits 11:5 and bits 2:0 are cleared (the corresponding bits in the CR3-offset field in the MSEG header are ignored).

  - Bits 4:3 are set to bits 4:3 of the CR3-offset field in the MSEG header.
- CR4 is set as follows:
  - MCE, PGE, CET, and PCIDE are cleared.
  - PAE is set to the value of the IA-32e mode SMM feature bit.
  - If the IA-32e mode SMM feature bit is clear, PSE is set to 1 if supported by the processor; if the bit is set, PSE is cleared.
  - All other bits are unchanged.
- DR7 is set to 400H.
- The IA32_DEBUGCTL MSR is cleared to 00000000_00000000H.
- The registers CS, SS, DS, ES, FS, and GS are loaded as follows:
  - All registers are usable.
  - CS.selector is loaded from the corresponding field in the MSEG header (the high 16 bits are ignored), with bits 2:0 cleared to 0. If the result is 0000H, CS.selector is set to 0008H.
  - The selectors for SS, DS, ES, FS, and GS are set to CS.selector+0008H. If the result is 0000H (if the CS selector was FFF8H), these selectors are instead set to 0008H.
  - The base addresses of all registers are cleared to zero.
  - The segment limits for all registers are set to FFFFFFFFH.
  - The AR bytes for the registers are set as follows:
    - CS.Type is set to 11 (execute/read, accessed, non-conforming code segment).
    - For SS, DS, ES, FS, and GS, the Type is set to 3 (read/write, accessed, expand-up data segment).
    - The S bits for all registers are set to 1.
    - The DPL for each register is set to 0.
    - The P bits for all registers are set to 1.
    - On processors that support Intel 64 architecture, CS.L is loaded with the value of the IA-32e mode SMM feature bit.
    - CS.D is loaded with the inverse of the value of the IA-32e mode SMM feature bit.
    - For each of SS, DS, ES, FS, and GS, the D/B bit is set to 1.
    - The G bits for all registers are set to 1.
- LDTR is unusable. The LDTR selector is cleared to 0000H, and the register is otherwise undefined (although the base address is always canonical)
- GDTR.base is set to the sum of the MSEG base address and the GDTR base-offset field in the MSEG header (bits 63:32 are always cleared on processors that support IA-32e mode). GDTR.limit is set to the corresponding field in the MSEG header (the high 16 bits are ignored).
- IDTR.base is unchanged. IDTR.limit is cleared to 0000H.
- RIP is set to the sum of the MSEG base address and the value of the RIP-offset field in the MSEG header (bits 63:32 are always cleared on logical processors that support IA-32e mode).
- RSP is set to the sum of the MSEG base address and the value of the RSP-offset field in the MSEG header (bits 63:32 are always cleared on logical processor that supports IA-32e mode).
- RFLAGS is cleared, except bit 1, which is always set.
- The logical processor is left in the active state.
- Event blocking after the SMM VM exit is as follows:
  - There is no blocking by STI or by MOV SS.
  - There is blocking by non-maskable interrupts (NMIs) and by SMIs.
- There are no pending debug exceptions after the SMM VM exit.

- For processors that support IA-32e mode, the IA32_EFER MSR is modified so that LME and LMA both contain the value of the IA-32e mode SMM feature bit.

If any of CR3[63:5], CR4.PAE, CR4.PSE, or IA32_EFER.LMA is changing, the TLBs are updated so that, after VM exit, the logical processor does not use translations that were cached before the transition. This is not necessary for changes that would not affect paging due to the settings of other bits (for example, changes to CR4.PSE if IA32_EFER.LMA was 1 before and after the transition).

32.15.6.6 Loading MSRs

The VM-exit MSR-load area is not used by SMM VM exits that activate the dual-monitor treatment. No MSRs are loaded from that area.

32.15.7 Deactivating the Dual-Monitor Treatment

The SMM-transfer monitor may deactivate the dual-monitor treatment and return the processor to default treatment of SMIs and SMM (see Section 32.14). It does this by executing a VM entry with the "deactivate dual-monitor treatment" VM-entry control set to 1.

As noted in Section 27.2.1.3 and Section 32.15.4.1, an attempt to deactivate the dual-monitor treatment fails in the following situations: (1) the processor is not in SMM; (2) the "entry to SMM" VM-entry control is 1; or (3) the executive-VMCS pointer does not contain the VMXON pointer (the VM entry is to VMX non-root operation).

As noted in Section 32.15.4.9, VM entries that deactivate the dual-monitor treatment ignore the SMI bit in the interruptibility-state field of the guest-state area. Instead, the blocking of SMIs following such a VM entry depends on whether the logical processor is in SMX operation:[1]

- If the logical processor is in SMX operation, SMIs are blocked after VM entry. SMIs may later be unblocked by the VMXOFF instruction (see Section 32.14.4) or by certain leaf functions of the GETSEC instruction (see Chapter 7, "Safer Mode Extensions Reference," in *Intel® 64 and IA-32 Architectures Software Developer's Manual, Volume 2D*).
- If the logical processor is outside SMX operation, SMIs are unblocked after VM entry.

32.16 SMI AND PROCESSOR EXTENDED STATE MANAGEMENT

On processors that support processor extended states using XSAVE/XRSTOR (see Chapter 13, "Managing State Using the XSAVE Feature Set" of the *Intel® 64 and IA-32 Architectures Software Developer's Manual, Volume 1*), the processor does not save any XSAVE/XRSTOR related state on an SMI. It is the responsibility of the SMI handler code to properly preserve the state information (including CR4.OSXSAVE, XCR0, and possibly processor extended states using XSAVE/XRSTOR). Therefore, the SMI handler must follow the rules described in Chapter 13, "Managing State Using the XSAVE Feature Set" of the *Intel® 64 and IA-32 Architectures Software Developer's Manual, Volume 1*.

32.17 MODEL-SPECIFIC SYSTEM MANAGEMENT ENHANCEMENT

This section describes enhancement of system management features that apply only to the 4th generation Intel Core processors. These features are model-specific. BIOS and SMM handler must use CPUID to enumerate DisplayFamily_DisplayModel signature when programming with these interfaces.

---

1. A logical processor is in SMX operation if GETSEC[SEXIT] has not been executed since the last execution of GETSEC[SENTER]. A logical processor is outside SMX operation if GETSEC[SENTER] has not been executed or if GETSEC[SEXIT] was executed after the last execution of GETSEC[SENTER]. See Chapter 6, "Safer Mode Extensions Reference," in *Intel® 64 and IA-32 Architectures Software Developer's Manual, Volume 2B*.

32.17.1 SMM Handler Code Access Control

The BIOS may choose to restrict the address ranges of code that SMM handler executes. When SMM handler code execution check is enabled, an attempt by the SMM handler to execute outside the ranges specified by SMRR (see Section 32.4.2.1) will cause the assertion of an unrecoverable machine check exception (MCE).

The interface to enable SMM handler code access check resides in a per-package scope model-specific register MSR_SMM_FEATURE_CONTROL at address 4E0H. An attempt to access MSR_SMM_FEATURE_CONTROL outside of SMM will cause a #GP. Writes to MSR_SMM_FEATURE_CONTROL is further protected by configuration interface of MSR_SMM_MCA_CAP at address 17DH.

Details of the interface of MSR_SMM_FEATURE_CONTROL and MSR_SMM_MCA_CAP are described in Table 2-29 in Chapter 2, "Model-Specific Registers (MSRs)" of the *Intel® 64 and IA-32 Architectures Software Developer's Manual, Volume 4*.

32.17.2 SMI Delivery Delay Reporting

Entry into the system management mode occurs at instruction boundary. In situations where a logical processor is executing an instruction involving a long flow of internal operations, servicing an SMI by that logical processor will be delayed. Delayed servicing of SMI of each logical processor due to executing long flows of internal operation in a physical processor can be queried via a package-scope register MSR_SMM_DELAYED at address 4E2H.

The interface to enable reporting of SMI delivery delay due to long internal flows resides in a per-package scope model-specific register MSR_SMM_DELAYED. An attempt to access MSR_SMM_DELAYED outside of SMM will cause a #GP. Availability to MSR_SMM_DELAYED is protected by configuration interface of MSR_SMM_MCA_CAP at address 17DH.

Details of the interface of MSR_SMM_DELAYED and MSR_SMM_MCA_CAP are described in Table 2-29 in Chapter 2, "Model-Specific Registers (MSRs)" of the *Intel® 64 and IA-32 Architectures Software Developer's Manual, Volume 4*.

32.17.3 Blocked SMI Reporting

A logical processor may have entered into a state and blocked from servicing other interrupts (including SMI). Logical processors in a physical processor that are blocked in serving SMI can be queried in a package-scope register MSR_SMM_BLOCKED at address 4E3H. An attempt to access MSR_SMM_BLOCKED outside of SMM will cause a #GP.

Details of the interface of MSR_SMM_BLOCKED is described in Table 2-29 in Chapter 2, "Model-Specific Registers (MSRs)" of the *Intel® 64 and IA-32 Architectures Software Developer's Manual, Volume 4*.

CHAPTER 33
INTEL® PROCESSOR TRACE

33.1 OVERVIEW

Intel® Processor Trace (**Intel PT**) is an extension of Intel® Architecture that captures information about software execution using dedicated hardware facilities that cause only minimal performance perturbation to the software being traced. This information is collected in **data packets**. The initial implementations of Intel PT offer **control flow tracing**, which generates a variety of packets to be processed by a software decoder. The packets include timing, program flow information (e.g., branch targets, branch taken/not taken indications) and program-induced mode related information (e.g., Intel TSX state transitions, CR3 changes). These packets may be buffered internally before being sent to the memory subsystem or other output mechanism available in the platform. Debug software can process the trace data and reconstruct the program flow.

Intel Processor Trace was first introduced in Intel® processors based on Broadwell microarchitecture and Intel Atom® processors based on Goldmont microarchitecture. Later generations include additional trace sources, including software trace instrumentation using PTWRITE, and Power Event tracing.

33.1.1 Features and Capabilities

Intel PT's control flow trace generates a variety of packets that, when combined with the binaries of a program by a post-processing tool, can be used to produce an exact execution trace. The packets record flow information such as instruction pointers (IP), indirect branch targets, and directions of conditional branches within contiguous code regions (basic blocks).

Intel PT can also be configured to log software-generated packets using PTWRITE, and packets describing processor power management events. Further, Precise Event-Based Sampling (PEBS) can be configured to log PEBS records in the Intel PT trace; see Section 20.5.5.2.

In addition, the packets record other contextual, timing, and bookkeeping information that enables both functional and performance debugging of applications. Intel PT has several control and filtering capabilities available to customize the tracing information collected and to append other processor state and timing information to enable debugging. For example, there are modes that allow packets to be filtered based on the current privilege level (CPL) or the value of CR3.

Configuration of the packet generation and filtering capabilities are programmed via a set of MSRs. The MSRs generally follow the naming convention of IA32_RTIT_*. The capability provided by these configuration MSRs are enumerated by CPUID, see Section 33.3. Details of the MSRs for configuring Intel PT are described in Section 33.2.8.

33.1.1.1 Packet Summary

After a tracing tool has enabled and configured the appropriate MSRs, the processor will collect and generate trace information in the following categories of packets (for more details on the packets, see Section 33.4):

- Packets about basic information on program execution; these include:
  - Packet Stream Boundary (PSB) packets: PSB packets act as 'heartbeats' that are generated at regular intervals (e.g., every 4K trace packet bytes). These packets allow the packet decoder to find the packet boundaries within the output data stream; a PSB packet should be the first packet that a decoder looks for when beginning to decode a trace.
  - Paging Information Packet (PIP): PIPs record modifications made to the CR3 register. This information, along with information from the operating system on the CR3 value of each process, allows the debugger to attribute linear addresses to their correct application source.
  - Time-Stamp Counter (TSC) packets: TSC packets aid in tracking wall-clock time, and contain some portion of the software-visible time-stamp counter.
  - Core Bus Ratio (CBR) packets: CBR packets contain the core:bus clock ratio.

  - Mini Time Counter (MTC) packets: MTC packets provide periodic indication of the passing of wall-clock time.
  - Cycle Count (CYC) packets: CYC packets provide indication of the number of processor core clock cycles that pass between packets.
  - Overflow (OVF) packets: OVF packets are sent when the processor experiences an internal buffer overflow, resulting in packets being dropped. This packet notifies the decoder of the loss and can help the decoder to respond to this situation.
- Packets about control flow information:
  - Taken Not-Taken (TNT) packets: TNT packets track the "direction" of direct conditional branches (taken or not taken).
  - Target IP (TIP) packets: TIP packets record the target IP of indirect branches, exceptions, interrupts, and other branches or events. These packets can contain the IP, although that IP value may be compressed by eliminating upper bytes that match the last IP. There are various types of TIP packets; they are covered in more detail in Section 33.4.2.2.
  - Flow Update Packets (FUP): FUPs provide the source IP addresses for asynchronous events (interrupt and exceptions), as well as other cases where the source address cannot be determined from the binary.
  - MODE packets: These packets provide the decoder with important processor execution information so that it can properly interpret the dis-assembled binary and trace log. MODE packets have a variety of formats that indicate details such as the execution mode (16-bit, 32-bit, or 64-bit).
- Packets inserted by software:
  - PTWRITE (PTW) packets: includes the value of the operand passed to the PTWRITE instruction (see "PTWRITE—Write Data to a Processor Trace Packet" in *Intel® 64 and IA-32 Architectures Software Developer's Manual, Volume 2B*).
- Packets about processor power management events:
  - MWAIT packets: Indicate successful completion of an MWAIT operation to a C-state deeper than C0.0.
  - Power State Entry (PWRE) packets: Indicate entry to a C-state deeper than C0.0.
  - Power State Exit (PWRX) packets: Indicate exit from a C-state deeper than C0.0, returning to C0.
  - Execution Stopped (EXSTOP) packets: Indicate that software execution has stopped, due to events such as P-state change, C-state change, or thermal throttling.
- Packets containing groups of processor state values:
  - Block Begin Packets (BBP): Indicate the type of state held in the following group.
  - Block Item Packets (BIP): Indicate the state values held in the group.
  - Block End Packets (BEP): Indicate the end of the current group.

33.2 INTEL® PROCESSOR TRACE OPERATIONAL MODEL

This section describes the overall Intel Processor Trace mechanism and the essential concepts relevant to how it operates.

33.2.1 Change of Flow Instruction (COFI) Tracing

A basic program block is a section of code where no jumps or branches occur. The instruction pointers (IPs) in this block of code need not be traced, as the processor will execute them from start to end without redirecting code flow. Instructions such as branches, and events such as exceptions or interrupts, can change the program flow. These instructions and events that change program flow are called Change of Flow Instructions (COFI). There are three categories of COFI:

- Direct transfer COFI.
- Indirect transfer COFI.
- Far transfer COFI.

The following subsections describe the COFI events that result in trace packet generation. Table 33-1 lists branch instruction by COFI types. For detailed description of specific instructions, see *Intel® 64 and IA-32 Architectures Software Developer's Manual*.

Table 33-1. COFI Type for Branch Instructions

COFI Type	Instructions
Conditional Branch	JA, JAE, JB, JBE, JC, JCXZ, JECXZ, JRCXZ, JE, JG, JGE, JL, JLE, JNA, JNAE, JNB, JNBE, JNC, JNE, JNG, JNGE, JNL, JNLE, JNO, JNP, JNS, JNZ, JO, JP, JPE, JPO, JS, JZ, LOOP, LOOPE, LOOPNE, LOOPNZ, LOOPZ
Unconditional Direct Branch	JMP (E9 xx, EB xx), CALL (E8 xx)
Indirect Branch	JMP (FF /4), CALL (FF /2), RET (C3, C2 xx)
Far Transfers	INT1, INT3, INT *n*, INTO, IRET, IRETD, IRETQ, JMP (EA xx, FF /5), CALL (9A xx, FF /3), RET (CB, CA xx), SYSCALL, SYSRET, SYSENTER, SYSEXIT, VMLAUNCH, VMRESUME

33.2.1.1 Direct Transfer COFI

Direct Transfer COFI are relative branches. This means that their target is an IP whose offset from the current IP is embedded in the instruction bytes. It is not necessary to indicate target of these instructions in the trace output since it can be obtained through the source disassembly. Conditional branches need to indicate only whether the branch is taken or not. Unconditional branches do not need any recording in the trace output. There are two sub-categories:

- **Conditional Branch (Jcc, J*CXZ) and LOOP**

  To track this type of instruction, the processor encodes a single bit (taken or not taken — TNT) to indicate the program flow after the instruction.

  Jcc, J*CXZ, and LOOP can be traced with TNT bits. To improve the trace packet output efficiency, the processor will compact several TNT bits into a single packet.

- **Unconditional Direct Jumps**

  There is no trace output required for direct unconditional jumps (like JMP near relative or CALL near relative) since they can be directly inferred from the application assembly. Direct unconditional jumps do not generate a TNT bit or a Target IP packet, though TIP.PGD and TIP.PGE packets can be generated by unconditional direct jumps that toggle Intel PT enables (see Section 33.2.6).

33.2.1.2 Indirect Transfer COFI

Indirect transfer instructions involve updating the IP from a register or memory location. Since the register or memory contents can vary at any time during execution, there is no way to know the target of the indirect transfer until the register or memory contents are read. As a result, the disassembled code is not sufficient to determine the target of this type of COFI. Therefore, tracing hardware must send out the destination IP in the trace packet for debug software to determine the target address of the COFI. Note that this IP may be a linear or effective address (see Section 33.3.1.1).

An indirect transfer instruction generates a Target IP Packet (TIP) that contains the target address of the branch. There are two sub-categories:

- **Near JMP Indirect and Near Call Indirect**

  As previously mentioned, the target of an indirect COFI resides in the contents of either a register or memory location. Therefore, the processor must generate a packet that includes this target address to allow the decoder to determine the program flow.

- **Near RET**

  When a CALL instruction executes, it pushes onto the stack the address of the next instruction following the CALL. Upon completion of the call procedure, the RET instruction is often used to pop the return address off of the call stack and redirect code flow back to the instruction following the CALL.

  A RET instruction simply transfers program flow to the address it popped off the stack. Because a called procedure may change the return address on the stack before executing the RET instruction, debug software

can be misled if it assumes that code flow will return to the instruction following the last CALL. Therefore, even for near RET, a Target IP Packet may be sent.

— **RET Compression**

A special case is applied if the target of the RET is consistent with what would be expected from tracking the CALL stack. If it is assured that the decoder has seen the corresponding CALL (with "corresponding" defined as the CALL with matching stack depth), and the RET target is the instruction after that CALL, the RET target may be "compressed". In this case, only a single TNT bit of "taken" is generated instead of a Target IP Packet. To ensure that the decoder will not be confused in cases of RET compression, only RETs that correspond to CALLs which have been seen since the last PSB packet may be compressed in a given logical processor. For details, see "Indirect Transfer Compression for Returns (RET)" in Section 33.4.2.2.

33.2.1.3 Far Transfer COFI

All operations that change the instruction pointer and are not near jumps are "far transfers". This includes exceptions, interrupts, traps, TSX aborts, and instructions that do far transfers.

All far transfers will produce a Target IP (TIP) packet, which provides the destination IP address. For those far transfers that cannot be inferred from the binary source (e.g., asynchronous events such as exceptions and interrupts), the TIP will be preceded by a Flow Update packet (FUP), which provides the source IP address at which the event was taken. Table 33-23 indicates exactly which IP will be included in the FUP generated by a far transfer.

33.2.2 Software Trace Instrumentation with PTWRITE

PTWRITE provides a mechanism by which software can instrument the Intel PT trace. PTWRITE is a ring3-accessible instruction that can be passed to a register or memory variable, see "PTWRITE—Write Data to a Processor Trace Packet" in *Intel® 64 and IA-32 Architectures Software Developer's Manual, Volume 2B* for details. The contents of that variable will be used as the payload for the PTW packet (see Table 33-40 "PTW Packet Definition"), inserted at the time of PTWRITE retirement, assuming PTWRITE is enabled and all other filtering conditions are met. Decode and analysis software will then be able to determine the meaning of the PTWRITE packet based on the IP of the associated PTWRITE instruction.

PTWRITE is enabled via IA32_RTIT_CTL.PTWEn[12] (see Table 33-6). Optionally, the user can use IA32_RTIT_CTL.FUPonPTW[5] to enable PTW packets to be followed by FUP packets containing the IP of the associated PTWRITE instruction. Support for PTWRITE is introduced in Intel Atom processors based on the Goldmont Plus microarchitecture.

33.2.3 Power Event Tracing

Power Event Trace is a capability that exposes core- and thread-level sleep state and power down transition information. When this capability is enabled, the trace will expose information about:

— Scenarios where software execution stops.
  - Due to sleep state entry, frequency change, or other powerdown.
  - Includes the IP, when in the tracing context.

— The requested and resolved hardware thread C-state.
  - Including indication of hardware autonomous C-state entry.

— The last and deepest core C-state achieved during a sleep session.

— The reason for C-state wake.

This information is in addition to the bus ratio (CBR) information provided by default after any powerdown, and the timing information (TSC, TMA, MTC, CYC) provided during or after a powerdown state.

Power Event Trace is enabled via IA32_RTIT_CTL.PwrEvtEn[4]. Support for Power Event Tracing is introduced in Intel Atom processors based on the Goldmont Plus microarchitecture.

33.2.4 Event Tracing

Event Trace is a capability that exposes details about the asynchronous events, when they are generated, and when their corresponding software event handler completes execution. These include:

- Interrupts, including NMI and SMI, including the interrupt vector when defined.
- Faults, exceptions including the fault vector.
  - Page faults additionally include the page fault address, when in context.
- Event handler returns, including IRET and RSM.
- VM exits and VM entries.[1]
  - VM exits include the values written to the "exit reason" and "exit qualification" VMCS fields.
- INIT and SIPI events.
- TSX aborts, including the abort status returned for the RTM instructions.
- Shutdown.

Additionally, it provides indication of the status of the Interrupt Flag (IF), to indicate when interrupts are masked.

Event Trace is enabled via IA32_RTIT_CTL.EventEn[31]. Event Trace information is conveyed in Control Flow Event (CFE) and Event Data (EVD) packets, as well as the legacy MODE.Exec packet. See Section 33.4.2 for packet details. Support for Event Trace is introduced in Intel® processors based on the Gracemont microarchitecture.

33.2.5 Trace Filtering

Intel Processor Trace provides filtering capabilities, by which the debug/profile tool can control what code is traced.

33.2.5.1 Filtering by Current Privilege Level (CPL)

Intel PT provides the ability to configure a logical processor to generate trace packets only when CPL = 0, when CPL > 0, or regardless of CPL.

CPL filtering ensures that no IPs or other architectural state information associated with the filtered CPL can be seen in the log. For example, if the processor is configured to trace only when CPL > 0, and software executes SYSCALL (changing the CPL to 0), the destination IP of the SYSCALL will be suppressed from the generated packet (see the discussion of TIP.PGD in Section 33.4.2.5).

It should be noted that CPL is always 0 in real-address mode and that CPL is always 3 in virtual-8086 mode. To trace code in these modes, filtering should be configured accordingly.

When software is executing in a non-enabled CPL, ContextEn is cleared. See Section 33.2.6.1 for details.

33.2.5.2 Filtering by CR3

Intel PT supports a CR3-filtering mechanism by which the generation of packets containing architectural states can be enabled or disabled based on the value of CR3. A debugger can use CR3 filtering to trace only a single application without context switching the state of the RTIT MSRs. For the reconstruction of traces from software with multiple threads, debug software may wish to context-switch for the state of the RTIT MSRs (if the operating system does not provide context-switch support) to separate the output for the different threads (see Section 33.3.5, "Context Switch Consideration").

To trace for only a single CR3 value, software can write that value to the IA32_RTIT_CR3_MATCH MSR, and set IA32_RTIT_CTL.CR3Filter. When CR3 value does not match IA32_RTIT_CR3_MATCH and IA32_RTIT_CTL.CR3Filter is 1, ContextEn is forced to 0, and packets containing architectural states will not be generated. Some other packets can be generated when ContextEn is 0; see Section 33.2.6.3 for details. When CR3 does match IA32_RTIT_CR3_MATCH (or when IA32_RTIT_CTL.CR3Filter is 0), CR3 filtering does not force ContextEn to 0 (although it could be 0 due to other filters or modes).

---

1. Logging of VMX transitions depends on VMCS configuration, see Section 33.5.1.

CR3 matches IA32_RTIT_CR3_MATCH if the two registers are identical for bits 63:12, or 63:5 when in PAE paging mode; the lower 5 bits of CR3 and IA32_RTIT_CR3_MATCH are ignored. CR3 filtering is independent of the value of CR0.PG.

When CR3 filtering is in use, PIP packets may still be seen in the log if the processor is configured to trace when CPL = 0 (IA32_RTIT_CTL.OS = 1). If not, no PIP packets will be seen.

33.2.5.3 Filtering by IP

Trace packet generation with configurable filtering by IP is supported if CPUID.(EAX=14H, ECX=0):EBX[bit 2] = 1. Intel PT can be configured to enable the generation of packets containing architectural states only when the processor is executing code within certain IP ranges. If the IP is outside of these ranges, generation of some packets is blocked.

IP filtering is enabled using the ADDRn_CFG fields in the IA32_RTIT_CTL MSR (Section 33.2.8.2), where the digit 'n' is a zero-based number that selects which address range is being configured. Each ADDRn_CFG field configures the use of the register pair IA32_RTIT_ADDRn_A and IA32_RTIT_ADDRn_B (Section 33.2.8.5). IA32_RTIT_ADDRn_A defines the base and IA32_RTIT_ADDRn_B specifies the limit of the range in which tracing is enabled. Thus each range, referred to as the ADDRn range, is defined by [IA32_RTIT_ADDRn_A, IA32_RTIT_ADDRn_B]. There can be multiple such ranges, software can query CPUID (Section 33.3.1) for the number of ranges supported on a processor.

Default behavior (ADDRn_CFG=0) defines no IP filter range, meaning FilterEn is always set. In this case code at any IP can be traced, though other filters, such as CR3 or CPL, could limit tracing. When ADDRn_CFG is set to enable IP filtering (see Section 33.3.1), tracing will commence when a taken branch or event is seen whose target address is in the ADDRn range.

While inside a tracing region and with FilterEn is set, leaving the tracing region may only be detected once a taken branch or event with a target outside the range is retired. If an ADDRn range is entered or exited by executing the next sequential instruction, rather than by a control flow transfer, FilterEn may not toggle immediately. See Section 33.2.6.5 for more details on FilterEn.

Note that these address range base and limit values are inclusive, such that the range includes the first and last instruction whose first instruction byte is in the ADDRn range.

Depending upon processor implementation, IP filtering may be based on linear or effective address. This can cause different behavior between implementations if CSbase is not equal to zero or in real mode. See Section 33.3.1.1 for details. Software can query CPUID to determine filters are based on linear or effective address (Section 33.3.1).

Note that some packets, such as MTC (Section 33.3.7) and other timing packets, do not depend on FilterEn. For details on which packets depend on FilterEn, and hence are impacted by IP filtering, see Section 33.4.1.

TraceStop

The ADDRn ranges can also be configured to cause tracing to be disabled upon entry to the specified region. This is intended for cases where unexpected code is executed, and the user wishes to immediately stop generating packets in order to avoid overwriting previously written packets.

The TraceStop mechanism works much the same way that IP filtering does, and uses the same address comparison logic. The TraceStop region base and limit values are programmed into one or more ADDRn ranges, but IA32_RTIT_CTL.ADDRn_CFG is configured with the TraceStop encoding. Like FilterEn, TraceStop is detected when a taken branch or event lands in a TraceStop region.

Further, TraceStop requires that TriggerEn=1 at the beginning of the branch/event, and ContextEn=1 upon completion of the branch/event. When this happens, the CPU will set IA32_RTIT_STATUS.Stopped, thereby clearing TriggerEn and hence disabling packet generation. This may generate a TIP.PGD packet with the target IP of the branch or event that entered the TraceStop region. Finally, a TraceStop packet will be inserted, to indicate that the condition was hit.

If a TraceStop condition is encountered during buffer overflow (Section 33.3.8), it will not be dropped, but will instead be signaled once the overflow has resolved.

Note that a TraceStop event does not guarantee that all internally buffered packets are flushed out of internal buffers. To ensure that this has occurred, the user should clear TraceEn.

To resume tracing after a TraceStop event, the user must first disable Intel PT by clearing IA32_RTIT_CTL.TraceEn before the IA32_RTIT_STATUS.Stopped bit can be cleared. At this point Intel PT can be reconfigured, and tracing resumed.

Note that the IA32_RTIT_STATUS.Stopped bit can also be set using the ToPA STOP bit. See Section 33.2.7.2.

IP Filtering Example

The following table gives an example of IP filtering behavior. Assume that IA32_RTIT_ADDRn_A = the IP of RangeBase, and that IA32_RTIT_ADDRn_B = the IP of RangeLimit, while IA32_RTIT_CTL.ADDRn_CFG = 0x1 (enable ADDRn range as a FilterEn range).

Table 33-2. IP Filtering Packet Example

Code Flow	Packets

`Bar:`
`  jmp RangeBase // jump into filter range`
`RangeBase:`
`  jcc Foo // not taken`
`  add eax, 1`
`Foo:`
`  jmp RangeLimit+1 // jump out of filter range`
`RangeLimit:`
`  nop`
`  jcc Bar`
	TIP.PGE(RangeBase)
	TNT(0)
	TIP.PGD(RangeLimit+1)

IP Filtering and TraceStop

It is possible for the user to configure IP filter range(s) and TraceStop range(s) that overlap. In this case, code executing in the non-overlapping portion of either range will behave as would be expected from that range. Code executing in the overlapping range will get TraceStop behavior.

33.2.6 Packet Generation Enable Controls

Intel Processor Trace includes a variety of controls that determine whether a packet is generated. In general, most packets are sent only if Packet Enable (**PacketEn**) is set. PacketEn is an internal state maintained in hardware in response to software configurable enable controls, PacketEn is not visible to software directly. The relationship of PacketEn to the software-visible controls in the configuration MSRs is described in this section.

33.2.6.1 Packet Enable (PacketEn)

When PacketEn is set, the processor is in the mode that Intel PT is monitoring. PacketEn is composed of other states according to this relationship:

```
PacketEn := TriggerEn AND ContextEn AND FilterEn AND BranchEn
```

These constituent controls are detailed in the following subsections.

PacketEn ultimately determines when the processor is tracing. When PacketEn is set, all control flow packets are enabled. When PacketEn is clear, no control flow packets are generated, though other packets (timing and bookkeeping packets) may still be sent. See Section 33.2.7 for details of PacketEn and packet generation.

Note that, on processors that do not support IP filtering (i.e., CPUID.(EAX=14H, ECX=0):EBX[bit 2] = 0), FilterEn is treated as always set.

33.2.6.2 Trigger Enable (TriggerEn)

Trigger Enable (**TriggerEn**) is the primary indicator that trace packet generation is active. TriggerEn is set when IA32_RTIT_CTL.TraceEn is set, and cleared by any of the following conditions:

- TraceEn is cleared by software.
- A TraceStop condition is encountered and IA32_RTIT_STATUS.Stopped is set.
- IA32_RTIT_STATUS.Error is set due to an operational error (see Section 33.3.10).

Software can discover the current TriggerEn value by reading the IA32_RTIT_STATUS.TriggerEn bit. When TriggerEn is clear, tracing is inactive and no packets are generated.

33.2.6.3 Context Enable (ContextEn)

Context Enable (**ContextEn**) indicates whether the processor is in the state or mode that software configured hardware to trace. For example, if execution with CPL = 0 code is not being traced (IA32_RTIT_CTL.OS = 0), then ContextEn will be 0 when the processor is in CPL0.

Software can discover the current ContextEn value by reading the IA32_RTIT_STATUS.ContextEn bit. ContextEn is defined as follows:

```
ContextEn = !((IA32_RTIT_CTL.OS = 0 AND CPL = 0) OR
(IA32_RTIT_CTL.USER = 0 AND CPL > 0) OR (IS_IN_A_PRODUCTION_ENCLAVE[1]) OR
(IA32_RTIT_CTL.CR3Filter = 1 AND IA32_RTIT_CR3_MATCH does not match CR3)
```

If the clearing of ContextEn causes PacketEn to be cleared, a Packet Generation Disable (TIP.PGD) packet is generated, but its IP payload is suppressed. If the setting of ContextEn causes PacketEn to be set, a Packet Generation Enable (TIP.PGE) packet is generated.

When ContextEn is 0, control flow packets (TNT, FUP, TIP.*, MODE.*) are not generated, and no Linear Instruction Pointers (LIPs) are exposed. However, some packets, such as MTC and PSB (see Section 33.4.2.16 and Section 33.4.2.17), may still be generated while ContextEn is 0. For details of which packets are generated only when ContextEn is set, see Section 33.4.1.

The processor does not update ContextEn when TriggerEn = 0.

The value of ContextEn will toggle only when TriggerEn = 1.

33.2.6.4 Branch Enable (BranchEn)

This value is based purely on the IA32_RTIT_CTL.BranchEn value. If **BranchEn** is not set, then relevant COFI packets (TNT, TIP*, FUP, MODE.*) are suppressed. Other packets related to timing (TSC, TMA, MTC, CYC), as well as PSB, will be generated normally regardless. Further, PIP and VMCS continue to be generated, as indicators of what software is running.

33.2.6.5 Filter Enable (FilterEn)

Filter Enable indicates that the Instruction Pointer (IP) is within the range of IPs that Intel PT is configured to watch. Software can get the state of Filter Enable by a RDMSR of IA32_RTIT_STATUS.FilterEn. For details on configuration and use of IP filtering, see Section 33.2.5.3.

On clearing of FilterEn that also clears PacketEn, a Packet Generation Disable (TIP.PGD) will be generated, but unlike the ContextEn case, the IP payload may not be suppressed. For direct, unconditional branches, as well as for indirect branches (including RETs), the PGD generated by leaving the tracing region and clearing FilterEn will contain the target IP. This means that IPs from outside the configured range can be exposed in the trace, as long as they are within context.

When FilterEn is 0, control flow packets are not generated (e.g., TNT, TIP). However, some packets, such as PIP, MTC, and PSB, may still be generated while FilterEn is clear. For details on packet enable dependencies, see Section 33.4.1.

---

1. Trace packets generation is disabled in a production enclave, see Section 33.2.9.5. See *Intel® Software Guard Extensions Programming Reference* about differences between a production enclave and a debug enclave.

After TraceEn is set, FilterEn is set to 1 at all times if there is no IP filter range configured by software (IA32_RTIT_CTL.ADDRn_CFG != 1, for all n), or if the processor does not support IP filtering (i.e., CPUID.(EAX=14H, ECX=0):EBX[bit 2] = 0). FilterEn will toggle only when TraceEn=1 and ContextEn=1, and when at least one range is configured for IP filtering.

33.2.7 Trace Output

Intel PT output should be viewed independently from trace content and filtering mechanisms. The options available for trace output can vary across processor generations and platforms.

Trace output is written out using one of the following output schemes, as configured by the ToPA and FabricEn bit fields of IA32_RTIT_CTL (see Section 33.2.8.2):

- A single, contiguous region of physical address space.
- A collection of variable-sized regions of physical memory. These regions are linked together by tables of pointers to those regions, referred to as Table of Physical Addresses (**ToPA**). The trace output stores bypass the caches and the TLBs, but are not serializing. This is intended to minimize the performance impact of the output.
- A platform-specific trace transport subsystem.

Regardless of the output scheme chosen, Intel PT stores bypass the processor caches by default. This ensures that they don't consume precious cache space, but they do not have the serializing aspects associated with un-cacheable (UC) stores. Software should avoid using MTRRs to mark any portion of the Intel PT output region as UC, as this may override the behavior described above and force Intel PT stores to UC, thereby incurring severe performance impact.

There is no guarantee that a packet will be written to memory or other trace endpoint after some fixed number of cycles after a packet-producing instruction executes. The only way to assure that all packets generated have reached their endpoint is to clear TraceEn and follow that with a store, fence, or serializing instruction; doing so ensures that all buffered packets are flushed out of the processor.

33.2.7.1 Single Range Output

When IA32_RTIT_CTL.ToPA and IA32_RTIT_CTL.FabricEn bits are clear, trace packet output is sent to a single, contiguous memory (or MMIO if DRAM is not available) range defined by a base address in IA32_RTIT_OUTPUT_BASE (Section 33.2.8.7) and mask value in IA32_RTIT_OUTPUT_MASK_PTRS (Section 33.2.8.8). The current write pointer in this range is also stored in IA32_RTIT_OUTPUT_MASK_PTRS. This output range is circular, meaning that when the writes wrap around the end of the buffer they begin again at the base address.

This output method is best suited for cases where Intel PT output is either:

- Configured to be directed to a sufficiently large contiguous region of DRAM.
- Configured to go to an MMIO debug port, in order to route Intel PT output to a platform-specific trace endpoint (e.g., JTAG). In this scenario, a specific range of addresses is written in a circular manner, and SoC will intercept these writes and direct them to the proper device. Repeated writes to the same address do not overwrite each other, but are accumulated by the debugger, and hence no data is lost by the circular nature of the buffer.

The processor will determine the address to which to write the next trace packet output byte as follows:

```
OutputBase[63:0] := IA32_RTIT_OUTPUT_BASE[63:0]

OutputMask[63:0] := ZeroExtend64(IA32_RTIT_OUTPUT_MASK_PTRS[31:0])

OutputOffset[63:0] := ZeroExtend64(IA32_RTIT_OUTPUT_MASK_PTRS[63:32])

trace_store_phys_addr := (OutputBase & ~OutputMask) + (OutputOffset & OutputMask)
```

Single-Range Output Errors

If the output base and mask are not properly configured by software, an operational error (see Section 33.3.10) will be signaled, and tracing disabled. Error scenarios with single-range output are:

- Mask value is non-contiguous.

  IA32_RTIT_OUTPUT_MASK_PTRS.MaskOrTablePointer value has a 0 in a less significant bit position than the most significant bit containing a 1.

- Base address and Mask are mis-aligned, and have overlapping bits set.

  IA32_RTIT_OUTPUT_BASE && IA32_RTIT_OUTPUT_MASK_PTRS[31:0] > 0.

- Illegal Output Offset

  IA32_RTIT_OUTPUT_MASK_PTRS.OutputOffset is greater than the mask value IA32_RTIT_OUTPUT_MASK_PTRS[31:0].

Also note that errors can be signaled due to trace packet output overlapping with restricted memory, see Section 33.2.7.4.

33.2.7.2 Table of Physical Addresses (ToPA)

When IA32_RTIT_CTL.ToPA is set and IA32_RTIT_CTL.FabricEn is clear, the ToPA output mechanism is utilized. The ToPA mechanism uses a linked list of tables; see Figure 33-1 for an illustrative example. Each entry in the table contains some attribute bits, a pointer to an output region, and the size of the region. The last entry in the table may hold a pointer to the next table. This pointer can either point to the top of the current table (for circular array) or to the base of another table. The table size is not fixed, since the link to the next table can exist at any entry.

The processor treats the various output regions referenced by the ToPA table(s) as a unified buffer. This means that a single packet may span the boundary between one output region and the next.

The ToPA mechanism is controlled by three values maintained by the processor:

- **proc_trace_table_base.**
  This is the physical address of the base of the current ToPA table. When tracing is enabled, the processor loads this value from the IA32_RTIT_OUTPUT_BASE MSR. While tracing is enabled, the processor updates the IA32_RTIT_OUTPUT_BASE MSR with changes to proc_trace_table_base, but these updates may not be synchronous to software execution. When tracing is disabled, the processor ensures that the MSR contains the latest value of proc_trace_table_base.

- **proc_trace_table_offset.**
  This indicates the entry of the current table that is currently in use. (This entry contains the address of the current output region.) When tracing is enabled, the processor loads the value from bits 31:7 (MaskOrTableOffset) of the IA32_RTIT_OUTPUT_MASK_PTRS into bits 27:3 of proc_trace_table_offset. While tracing is enabled, the processor updates IA32_RTIT_OUTPUT_MASK_PTRS.MaskOrTableOffset with changes to proc_trace_table_offset, but these updates may not be synchronous to software execution. When tracing is disabled, the processor ensures that the MSR contains the latest value of proc_trace_table_offset.

- **proc_trace_output_offset.**
  This a pointer into the current output region and indicates the location of the next write. When tracing is enabled, the processor loads this value from bits 63:32 (OutputOffset) of the IA32_RTIT_OUTPUT_MASK_PTRS. While tracing is enabled, the processor updates IA32_RTIT_OUTPUT_MASK_PTRS.OutputOffset with changes to proc_trace_output_offset, but these updates may not be synchronous to software execution. When tracing is disabled, the processor ensures that the MSR contains the latest value of proc_trace_output_offset.

Figure 33-1 provides an illustration (not to scale) of the table and associated pointers.

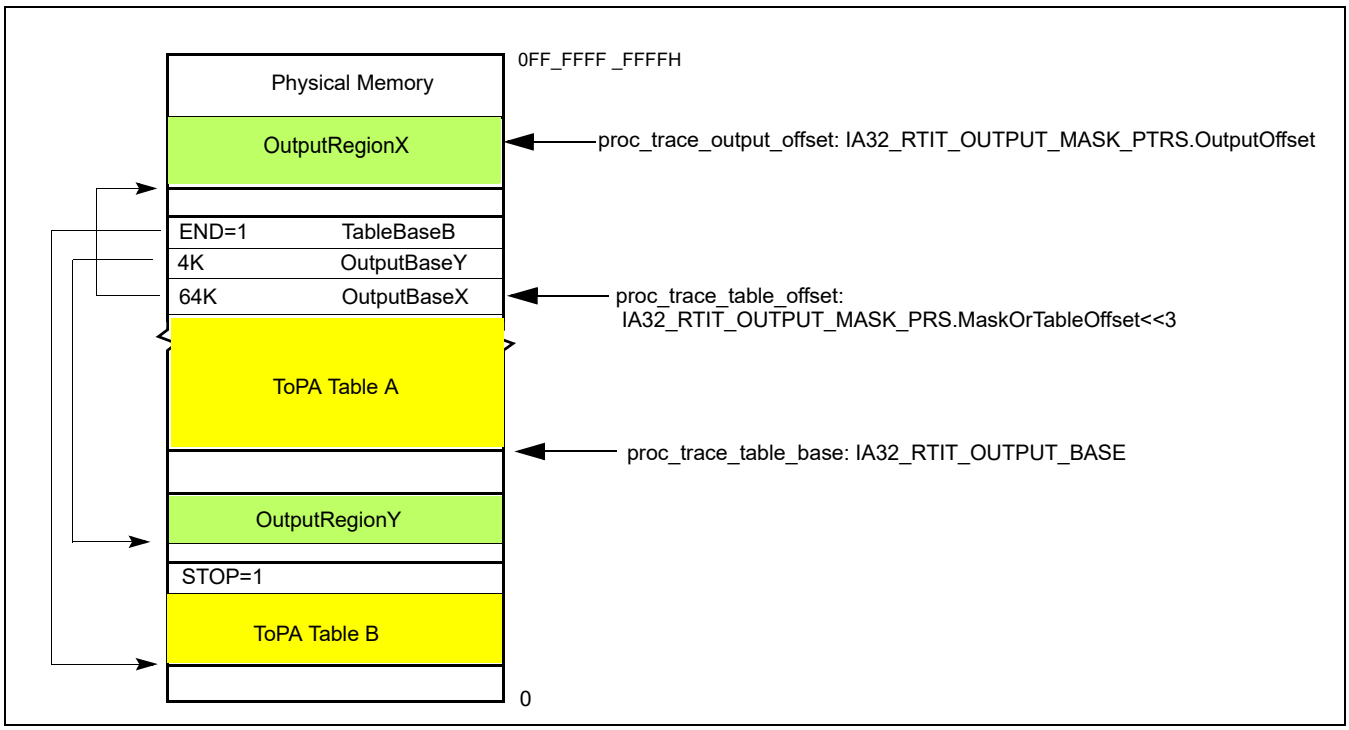

Figure 33-1. ToPA Memory Illustration

With the ToPA mechanism, the processor writes packets to the current output region (identified by proc_trace_table_base and the proc_trace_table_offset). The offset within that region to which the next byte will be written is identified by proc_trace_output_offset. When that region is filled with packet output (thus proc_trace_output_offset = RegionSize–1), proc_trace_table_offset is moved to the next ToPA entry, proc_trace_output_offset is set to 0, and packet writes begin filling the new output region specified by proc_trace_table_offset.

As packets are written out, each store derives its physical address as follows:

```
trace_store_phys_addr := Base address from current ToPA table entry +
proc_trace_output_offset
```

Eventually, the regions represented by all entries in the table may become full, and the final entry of the table is reached. An entry can be identified as the final entry because it has either the END or STOP attribute. The END attribute indicates that the address in the entry does not point to another output region, but rather to another ToPA table. The STOP attribute indicates that tracing will be disabled once the corresponding region is filled. See Table 33-3 and the section that follows for details on STOP.

When an END entry is reached, the processor loads proc_trace_table_base with the base address held in this END entry, thereby moving the current table pointer to this new table. The proc_trace_table_offset is reset to 0, as is the proc_trace_output_offset, and packet writes will resume at the base address indicated in the first entry.

If the table has no STOP or END entry, and trace-packet generation remains enabled, eventually the maximum table size will be reached (proc_trace_table_offset = 0FFFFFF8H). In this case, the proc_trace_table_offset and proc_trace_output_offset are reset to 0 (wrapping back to the beginning of the current table) once the last output region is filled.

It is important to note that processor updates to the IA32_RTIT_OUTPUT_BASE and IA32_RTIT_OUTPUT_MASK_PTRS MSRs are asynchronous to instruction execution. Thus, reads of these MSRs while Intel PT is enabled may return stale values. Like all IA32_RTIT_* MSRs, the values of these MSRs should not be trusted or saved unless trace packet generation is first disabled by clearing IA32_RTIT_CTL.TraceEn. This ensures that the output MSR values account for all packets generated to that point, after which the processor will cease updating the output MSR values until tracing resumes. [1]

The processor may cache internally any number of entries from the current table or from tables that it references (directly or indirectly). If tracing is enabled, the processor may ignore or delay detection of modifications to these tables. To ensure that table changes are detected by the processor in a predictable manner, software should clear TraceEn before modifying the current table (or tables that it references) and only then re-enable packet generation.

Single Output Region ToPA Implementation

The first processor generation to implement Intel PT supports only ToPA configurations with a single ToPA entry followed by an END entry that points back to the first entry (creating one circular output buffer). Such processors enumerate CPUID.(EAX=14H,ECX=0):ECX.MENTRY[bit 1] = 0 and CPUID.(EAX=14H,ECX=0):ECX.TOPAOUT[bit 0] = 1.

If CPUID.(EAX=14H,ECX=0):ECX.MENTRY[bit 1] = 0, ToPA tables can hold only one output entry, which must be followed by an END=1 entry which points back to the base of the table. Hence only one contiguous block can be used as output.

The lone output entry can have INT or STOP set, but nonetheless must be followed by an END entry as described above. Note that, if INT=1, the PMI will actually be delivered before the region is filled.

ToPA Table Entry Format

The format of ToPA table entries is shown in Figure 33-2. The size of the address field is determined by the processor's physical-address width (MAXPHYADDR) in bits, as reported in CPUID.80000008H:EAX[7:0].

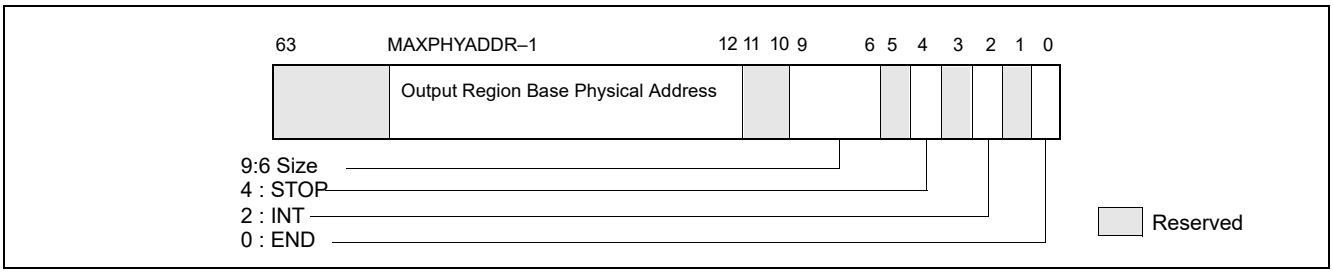

Figure 33-2. Layout of ToPA Table Entry

Table 33-3 describes the details of the ToPA table entry fields. If reserved bits are set to 1, an error is signaled.

Table 33-3. ToPA Table Entry Fields

ToPA Entry Field	Description
Output Region Base Physical Address	If END=0, this is the base physical address of the output region specified by this entry. Note that all regions must be aligned based on their size. Thus a 2M region must have bits 20:12 clear. If the region is not properly aligned, an operational error will be signaled when the entry is reached. If END=1, this is the 4K-aligned base physical address of the next ToPA table (which may be the base of the current table, or the first table in the linked list if a circular buffer is desired). If the processor supports only a single ToPA output region (see above), this address must be the value currently in the IA32_RTIT_OUTPUT_BASE MSR.

1. Although WRMSR is a serializing instruction, the execution of WRMSR that forces packet writes by clearing TraceEn does not itself cause these writes to be globally observed.

Table 33-3. ToPA Table Entry Fields (Contd.)

ToPA Entry Field	Description
Size	Indicates the size of the associated output region. Encodings are: 0: 4K, 1: 8K, 2: 16K, 3: 32K, 4: 64K, 5: 128K, 6: 256K, 7: 512K, 8: 1M, 9: 2M, 10: 4M, 11: 8M, 12: 16M, 13: 32M, 14: 64M, 15: 128M This field is ignored if END=1.
STOP	When the output region indicated by this entry is filled, software should disable packet generation. This will be accomplished by setting IA32_RTIT_STATUS.Stopped, which clears TriggerEn. This bit must be 0 if END=1; otherwise it is treated as reserved bit violation (see ToPA Errors).
INT	When the output region indicated by this entry is filled, signal Perfmon LVT interrupt. Note that if both INT and STOP are set in the same entry, the STOP will happen before the INT. Thus the interrupt handler should expect that the IA32_RTIT_STATUS.Stopped bit will be set, and will need to be reset before tracing can be resumed. This bit must be 0 if END=1; otherwise it is treated as reserved bit violation (see ToPA Errors).
END	If set, indicates that this is an END entry, and thus the address field points to a table base rather than an output region base. If END=1, INT and STOP must be set to 0; otherwise it is treated as reserved bit violation (see ToPA Errors). The Size field is ignored in this case. If the processor supports only a single ToPA output region (see above), END must be set in the second table entry.

ToPA STOP

Each ToPA entry has a STOP bit. If this bit is set, the processor will set the IA32_RTIT_STATUS.Stopped bit when the corresponding trace output region is filled. This will clear TriggerEn and thereby cease packet generation. See Section 33.2.8.4 for details on IA32_RTIT_STATUS.Stopped. This sequence is known as "ToPA Stop".

No TIP.PGD packet will be seen in the output when the ToPA stop occurs, since the disable happens only when the region is already full. When this occurs, output ceases after the last byte of the region is filled, which may mean that a packet is cut off in the middle. Any packets remaining in internal buffers are lost and cannot be recovered.

When ToPA stop occurs, the IA32_RTIT_OUTPUT_BASE MSR will hold the base address of the table whose entry had STOP=1. IA32_RTIT_OUTPUT_MASK_PTRS.MaskOrTableOffset will hold the index value for that entry, and the IA32_RTIT_OUTPUT_MASK_PTRS.OutputOffset should be set to the size of the region minus one.

Note that this means the offset pointer is pointing to the next byte after the end of the region, a configuration that would produce an operational error if the configuration remained when tracing is re-enabled with IA32_RTIT_STATUS.Stopped cleared.

ToPA PMI

Each ToPA entry has an INT bit. If this bit is set, the processor will signal a performance-monitoring interrupt (PMI) when the corresponding trace output region is filled. This interrupt is not precise, and it is thus likely that writes to the next region will occur by the time the interrupt is taken.

The following steps should be taken to configure this interrupt:

1. Enable PMI via the LVT Performance Monitor register (at MMIO offset 340H in xAPIC mode; via MSR 834H in x2APIC mode). See *Intel® 64 and IA-32 Architectures Software Developer's Manual, Volume 3B* for more details on this register. For ToPA PMI, set all fields to 0, save for the interrupt vector, which can be selected by software.
2. Set up an interrupt handler to service the interrupt vector that a ToPA PMI can raise.
3. Set the interrupt flag by executing STI.
4. Set the INT bit in the ToPA entry of interest and enable packet generation, using the ToPA output option. Thus, TraceEn=ToPA=1 in the IA32_RTIT_CTL MSR.

Once the INT region has been filled with packet output data, the interrupt will be signaled. This PMI can be distinguished from others by checking bit 55 (Trace_ToPA_PMI) of the IA32_PERF_GLOBAL_STATUS MSR (MSR 38EH). Once the ToPA PMI handler has serviced the relevant buffer, writing 1 to bit 55 of the MSR at 390H (IA32_GLOBAL_STATUS_RESET) clears IA32_PERF_GLOBAL_STATUS.Trace_ToPA_PMI.

Intel PT is not frozen on PMI, and thus the interrupt handler will be traced (though filtering can prevent this). The Freeze_Perfmon_on_PMI and Freeze_LBRs_on_PMI settings in IA32_DEBUGCTL will be applied on ToPA PMI just as on other PMIs, and hence Perfmon counters are frozen.

Assuming the PMI handler wishes to read any buffered packets for persistent output, or wishes to modify any Intel PT MSRs, software should first disable packet generation by clearing TraceEn. This ensures that all buffered packets are written to memory and avoids tracing of the PMI handler. The configuration MSRs can then be used to determine where tracing has stopped. If packet generation is disabled by the handler, it should then be manually re-enabled before the IRET if continued tracing is desired.

In rare cases, it may be possible to trigger a second ToPA PMI before the first is handled. This can happen if another ToPA region with INT=1 is filled before, or shortly after, the first PMI is taken, perhaps due to EFLAGS.IF being cleared for an extended period of time. This can manifest in two ways: either the second PMI is triggered before the first is taken, and hence only one PMI is taken, or the second is triggered after the first is taken, and thus will be taken when the handler for the first completes. Software can minimize the likelihood of the second case by clearing TraceEn at the beginning of the PMI handler. Further, it can detect such cases by then checking the Interrupt Request Register (IRR) for PMI pending, and checking the ToPA table base and off-set pointers (in IA32_RTIT_OUTPUT_BASE and IA32_RTIT_OUTPUT_MASK_PTRS) to see if multiple entries with INT=1 have been filled.

PMI Preservation

In some cases a ToPA PMI may be taken after completion of an XSAVES instruction that saves Intel PT state, and in such cases any modification of Intel PT MSRs within the PMI handler will not persist when the saved Intel PT context is later restored with XRSTORS. To account for such a scenario, the PMI Preservation feature has been added. Support for this feature is indicated by CPUID.(EAX=14H, ECX=0):EBX[bit 6].

When IA32_RTIT_CTL.InjectPsbPmiOnEnable[56] = 1, PMI preservation is enabled. When a ToPA region with INT=1 is filled, a PMI is pended and the new IA32_RTIT_STATUS.PendToPAPMI[7] is set to 1. If this bit is set when Intel PT is enabled, such that IA32_RTIT_CTL.TraceEn[0] transitions from 0 to 1, a ToPA PMI is pended. This behavior ensures that any ToPA PMI that is pended during XSAVES, and hence can't be properly handled, will be re-pended when the saved PT state is restored.

When this feature is enabled, the PMI handler should take the following actions:

1. Ignore ToPA PMIs that are taken when TraceEn = 0. This indicates that the PMI was pended during Intel PT disable, and the PendToPAPMI flag will ensure that the PMI is re-pended once Intel PT is re-enabled in the same context. For this reason, the PendToPAPMI bit should be left set to 1.
2. If TraceEn=1 and the PMI can be properly handled, clear the new PendTopaPMI bit. This will ensure that additional, spurious ToPA PMIs are not taken. It is required that PendToPAPMI is cleared before the PMI LVT mask is cleared in the APIC, and before any clearing of either LBRS_FROZEN or COUNTERS_FROZEN in IA32_PERF_GLOBAL_STATUS.

ToPA PMI and Single Output Region ToPA Implementation

A processor that supports only a single ToPA output region implementation (such that only one output region is supported; see above) will attempt to signal a ToPA PMI interrupt before the output wraps and overwrites the top of the buffer. To support this functionality, the PMI handler should disable packet generation as soon as possible.

Due to PMI skid, it is possible that, in rare cases, the wrap will have occurred before the PMI is delivered. Software can avoid this by setting the STOP bit in the ToPA entry (see Table 33-3); this will disable tracing once the region is filled, and no wrap will occur. This approach has the downside of disabling packet generation so that some of the instructions that led up to the PMI will not be traced. If the PMI skid is significant enough to cause the region to fill and tracing to be disabled, the PMI handler will need to clear the IA32_RTIT_STATUS.Stopped indication before tracing can resume.

ToPA PMI and XSAVES/XRSTORS State Handling

In some cases the ToPA PMI may be taken after completion of an XSAVES instruction that switches Intel PT state, and in such cases any modification of Intel PT MSRs within the PMI handler will not persist when the saved Intel PT context is later restored with XRSTORS. To account for such a scenario, it is recommended that the Intel PT output configuration be modified by altering the ToPA tables themselves, rather than the Intel PT output MSRs. On processors that support PMI preservation (CPUID.(EAX=14H, ECX=0):EBX[bit 6] = 1), setting IA32_RTIT_CTL.InjectPsbPmiOnEnable[56] = 1 will ensure that a PMI that is pending at the time PT is disabled will be recorded by setting IA32_RTIT_STATUS.PendTopaPMI[7] = 1. A PMI will then be pended when the saved PT context is later restored.

Table 33-4 depicts a recommended PMI handler algorithm for managing multi-region ToPA output and handling ToPA PMIs that may arrive between XSAVES and XRSTORS, if PMI preservation is not in use. This algorithm is flexible to allow software to choose between adding entries to the current ToPA table, adding a new ToPA table, or using the current ToPA table as a circular buffer. It assumes that the ToPA entry that triggers the PMI is not the last entry in the table, which is the recommended treatment.

Table 33-4. Algorithm to Manage Intel PT ToPA PMI and XSAVES/XRSTORS

Pseudo Code Flow

```
IF (IA32_PERF_GLOBAL_STATUS.ToPA)
    Save IA32_RTIT_CTL value;
    IF ( IA32_RTIT_CTL.TraceEN )
        Disable Intel PT by clearing TraceEn;
    FI;
    IF ( there is space available to grow the current ToPA table )
        Add one or more ToPA entries after the last entry in the ToPA table;
        Point new ToPA entry address field(s) to new output region base(s);
    ELSE
        Modify an upcoming ToPA entry in the current table to have END=1;
        IF (output should transition to a new ToPA table )
            Point the address of the "END=1" entry of the current table to the new table base;
        ELSE
            /* Continue to use the current ToPA table, make a circular. */
            Point the address of the "END=1"l entry to the base of the current table;
            Modify the ToPA entry address fields for filled output regions to point to new, unused output regions;
            /* Filled regions are those with index in the range of 0 to (IA32_RTIT_MASK_PTRS.MaskOrTableOffset -1). */
        FI;
      FI;
      Restore saved IA32_RTIT_CTL.value;
FI;
```

ToPA Errors

When a malformed ToPA entry is found, an **operational error** results (see Section 33.3.10). A malformed entry can be any of the following:

1. **ToPA entry reserved bit violation**.
   This describes cases where a bit marked as reserved in Section 33.2.7.2 above is set to 1.
2. **ToPA alignment violation**.
   This includes cases where illegal ToPA entry base address bits are set to 1:
   a. ToPA table base address is not 4KB-aligned. The table base can be from a WRMSR to IA32_RTIT_OUTPUT_BASE, or from a ToPA entry with END=1.
   b. ToPA entry base address is not aligned to the ToPA entry size (e.g., a 2MB region with base address[20:12] not equal to 0), for ToPA entries with END=0.
   c. ToPA entry base address sets upper physical address bits not supported by the processor.

3. **Illegal ToPA Output Offset**.
   IA32_RTIT_OUTPUT_MASK_PTRS.OutputOffset is greater than or equal to the size of the current ToPA output region size.
4. **ToPA rules violations**.
   These are similar to ToPA entry reserved bit violations; they are cases when a ToPA entry is encountered with illegal field combinations. They include the following:
   a. Setting the STOP or INT bit on an entry with END=1.
   b. Setting the END bit in entry 0 of a ToPA table.
   c. On processors that support only a single ToPA entry (see above), two additional illegal settings apply:
      i) ToPA table entry 1 with END=0.
      ii) ToPA table entry 1 with base address not matching the table base.

In all cases, the error will be logged by setting IA32_RTIT_STATUS.Error, thereby disabling tracing when the problematic ToPA entry is reached (when proc_trace_table_offset points to the entry containing the error). Any packet bytes that are internally buffered when the error is detected may be lost.

Note that operational errors may also be signaled due to attempts to access restricted memory. See Section 33.2.7.4 for details.

A tracing software have a range of flexibility using ToPA to manage the interaction of Intel PT with application buffers, see Section 33.4.2.26.

33.2.7.3 Trace Transport Subsystem

When IA32_RTIT_CTL.FabricEn is set, the IA32_RTIT_CTL.ToPA bit is ignored, and trace output is written to the trace transport subsystem. The endpoints of this transport are platform-specific, and details of configuration options should refer to the specific platform documentation. The FabricEn bit is available to be set if CPUID(EAX=14H,ECX=0):EBX[bit 3] = 1.

33.2.7.4 Restricted Memory Access

Packet output cannot be directed to any regions of memory that are restricted by the platform. In particular, all memory accesses on behalf of packet output are checked against the SMRR regions. If there is any overlap with these regions, trace data collection will not function properly. Exact processor behavior is implementation-dependent; Table 33-5 summarizes several scenarios.

Table 33-5. Behavior on Restricted Memory Access

Scenario	Description
ToPA output region overlaps with SMRR	Stores to the restricted memory region will be dropped, and that packet data will be lost. Any attempt to read from that restricted region will return all 1s. The processor also may signal an error (Section 33.3.10) and disable tracing when the output pointer reaches the restricted region. If packet generation remains enabled, then packet output may continue once stores are no longer directed to restricted memory (on wrap, or if the output region is larger than the restricted memory region).
ToPA table overlaps with SMRR	The processor will signal an error (Section 33.3.10) and disable tracing when the ToPA write pointer (IA32_RTIT_OUTPUT_BASE + proc_trace_table_offset) enters the restricted region.

It should also be noted that packet output should not be routed to the 4KB APIC MMIO region, as defined by the IA32_APIC_BASE MSR. For details about the APIC, refer to *Intel® 64 and IA-32 Architectures Software Developer's Manual, Volume 3A*. No error is signaled for this case.

Modifications to Restricted Memory Regions

It is recommended that software disable packet generation before modifying the SMRRs to change the scope of the SMRR regions. This is because the processor reserves the right to cache any number of ToPA table entries internally, after checking them against restricted memory ranges. Once cached, the entries will not be checked again, meaning one could potentially route packet output to a newly restricted region. Software can ensure that any cached entries are written to memory by clearing IA32_RTIT_CTL.TraceEn.

33.2.8 Enabling and Configuration MSRs

33.2.8.1 General Considerations

Trace packet generation is enabled and configured by a collection of model-specific registers (MSRs), which are detailed below. Some notes on the configuration MSR behavior:

- If Intel Processor Trace is not supported by the processor (see Section 33.3.1), RDMSR or WRMSR of the IA32_RTIT_* MSRs will cause #GP.
- A WRMSR to any of the IA32_RTIT_* configuration MSRs while packet generation is enabled (IA32_RTIT_CTL.TraceEn=1) will generate a #GP exception. Packet generation must be disabled before the configuration MSRs can be changed.

  Note: Software may write the same value back to IA32_RTIT_CTL without #GP, even if TraceEn=1.
- All configuration MSRs for Intel PT are duplicated per logical processor
- For each configuration MSR, any MSR write that attempts to change bits marked reserved, or utilize encodings marked reserved, will cause a #GP fault.
- All configuration MSRs for Intel PT are cleared on a warm or cold RESET.
  - If CPUID.(EAX=14H, ECX=0):EBX[bit 2] = 1, only the TraceEn bit is cleared on warm RESET; though this may have the impact of clearing other bits in IA32_RTIT_STATUS. Other MSR values of the trace configuration MSRs are preserved on warm RESET.
- The semantics of MSR writes to trace configuration MSRs in this chapter generally apply to explicit WRMSR to these registers, using VMexit or VM entry MSR load list to these MSRs, XRSTORS with requested feature bit map including XSAVE map component of state_8 (corresponding to IA32_XSS[bit 8]), and the write to IA32_RTIT_CTL.TraceEn by XSAVES (Section 33.3.5.2).

33.2.8.2 IA32_RTIT_CTL MSR

IA32_RTIT_CTL, at address 570H, is the primary enable and control MSR for trace packet generation. Bit positions are listed in Table 33-6.

Table 33-6. IA32_RTIT_CTL MSR

Position	Bit Name	At Reset	Bit Description
0	TraceEn	0	If 1, enables tracing; else tracing is disabled. When this bit transitions from 1 to 0, all buffered packets are flushed out of internal buffers. A further store, fence, or architecturally serializing instruction may be required to ensure that packet data can be observed at the trace endpoint. See Section 33.2.8.3 for details of enabling and disabling packet generation. Note that the processor will clear this bit on #SMI (Section 33.2.9.3) and warm reset. Other MSR bits of IA32_RTIT_CTL (and other trace configuration MSRs) are not impacted by these events.
1	CYCEn	0	0: Disables CYC Packet (see Section 33.4.2.14). 1: Enables CYC Packet. This bit is reserved if CPUID.(EAX=14H, ECX=0):EBX[bit 1] = 0.
2	OS	0	0: Packet generation is disabled when CPL = 0. 1: Packet generation may be enabled when CPL = 0.
3	User	0	0: Packet generation is disabled when CPL > 0. 1: Packet generation may be enabled when CPL > 0.
4	PwrEvtEn	0	0: Power Event Trace packets are disabled. 1: Power Event Trace packets are enabled (see Section 33.2.3, “Power Event Tracing”).

Table 33-6. IA32_RTIT_CTL MSR (Contd.)

Position	Bit Name	At Reset	Bit Description
5	FUPonPTW	0	0: PTW packets are not followed by FUPs. 1: PTW packets are followed by FUPs. This bit is reserved when CPUID.(EAX=14H, ECX=0):EBX[bit 4] ("PTWRITE Supported") is 0.
6	FabricEn	0	0: Trace output is directed to the memory subsystem, mechanism depends on IA32_RTIT_CTL.ToPA. 1: Trace output is directed to the trace transport subsystem, IA32_RTIT_CTL.ToPA is ignored. This bit is reserved if CPUID.(EAX=14H, ECX=0):ECX[bit 3] = 0.
7	CR3Filter	0	0: Disables CR3 filtering. 1: Enables CR3 filtering. This bit is reserved if CPUID.(EAX=14H, ECX=0):EBX[bit 0] ("CR3 Filtering Support") is 0.
8	ToPA	0	0: Single-range output scheme enabled if CPUID.(EAX=14H, ECX=0):ECX.SNGLRGNOUT[bit 2] = 1 and IA32_RTIT_CTL.FabricEn=0. 1: ToPA output scheme enabled (see Section 33.2.7.2) if CPUID.(EAX=14H, ECX=0):ECX.TOPA[bit 0] = 1, and IA32_RTIT_CTL.FabricEn=0. Note: WRMSR to IA32_RTIT_CTL that sets TraceEn but clears this bit and FabricEn would cause #GP, if CPUID.(EAX=14H, ECX=0):ECX.SNGLRGNOUT[bit 2] = 0. WRMSR to IA32_RTIT_CTL that sets this bit causes #GP, if CPUID.(EAX=14H, ECX=0):ECX.TOPA[bit 0] = 0.
9	MTCEn	0	0: Disables MTC Packet (see Section 33.4.2.16). 1: Enables MTC Packet. This bit is reserved if CPUID.(EAX=14H, ECX=0):EBX[bit 3] = 0.
10	TSCEn	0	0: Disable TSC packets. 1: Enable TSC packets (see Section 33.4.2.11).
11	DisRETC	0	0: Enable RET compression. 1: Disable RET compression (see Section 33.2.1.2).
12	PTWEn	0	0: PTWRITE packet generation disabled. 1: PTWRITE packet generation enabled (see Table 33-40 "PTW Packet Definition"). This bit is reserved when CPUID.(EAX=14H, ECX=0):EBX[bit 4] ("PTWRITE Supported") is 0.
13	BranchEn	0	0: Disable COFI-based packets. 1: Enable COFI-based packets: FUP, TIP, TIP.PGE, TIP.PGD, TNT, MODE.Exec, MODE.TSX. See Section 33.2.6.4 for details on BranchEn.
17:14	MTCFreq	0	Defines MTC packet Frequency, which is based on the core crystal clock, or Always Running Timer (ART). MTC will be sent each time the selected ART bit toggles. The following Encodings are defined: 0: ART(0), 1: ART(1), 2: ART(2), 3: ART(3), 4: ART(4), 5: ART(5), 6: ART(6), 7: ART(7), 8: ART(8), 9: ART(9), 10: ART(10), 11: ART(11), 12: ART(12), 13: ART(13), 14: ART(14), 15: ART(15) Software must use CPUID to query the supported encodings in the processor, see Section 33.3.1. Use of unsupported encodings will result in a #GP fault. This field is reserved if CPUID.(EAX=14H, ECX=0):EBX[bit 3] = 0.
18	Reserved	0	Must be 0.

Table 33-6. IA32_RTIT_CTL MSR (Contd.)

Position	Bit Name	At Reset	Bit Description
22:19	CycThresh	0	CYC packet threshold, see Section 33.3.6 for details. CYC packets will be sent with the first eligible packet after N cycles have passed since the last CYC packet. If CycThresh is 0 then N=0, otherwise N is defined as $2^{(CycThresh-1)}$. The following Encodings are defined: 0: 0, 1: 1, 2: 2, 3: 4, 4: 8, 5: 16, 6: 32, 7: 64, 8: 128, 9: 256, 10: 512, 11: 1024, 12: 2048, 13: 4096, 14: 8192, 15: 16384 Software must use CPUID to query the supported encodings in the processor, see Section 33.3.1. Use of unsupported encodings will result in a #GP fault. This field is reserved if CPUID.(EAX=14H, ECX=0):EBX[bit 1] = 0.
23	Reserved	0	Must be 0.
27:24	PSBFreq	0	Indicates the frequency of PSB packets. PSB packet frequency is based on the number of Intel PT packet bytes output, so this field allows the user to determine the increment of IA32_IA32_RTIT_STATUS.PacketByteCnt that should cause a PSB to be generated. Note that PSB insertion is not precise, but the average output bytes per PSB should approximate the SW selected period. The following Encodings are defined: 0: 2K, 1: 4K, 2: 8K, 3: 16K, 4: 32K, 5: 64K, 6: 128K, 7: 256K, 8: 512K, 9: 1M, 10: 2M, 11: 4M, 12: 8M, 13: 16M, 14: 32M, 15: 64M Software must use CPUID to query the supported encodings in the processor, see Section 33.3.1. Use of unsupported encodings will result in a #GP fault. This field is reserved if CPUID.(EAX=14H, ECX=0):EBX[bit 1] = 0.
30:28	Reserved	0	Must be 0.
31	EventEn	0	0: Event Trace packets are disabled. 1: Event Trace packets are enabled. This bit is reserved when CPUID.(EAX=14H, ECX=0):EBX[bit 7] ("Event Trace Supported") is 0.
35:32	ADDR0_CFG	0	Configures the base/limit register pair IA32_RTIT_ADDR0_A/B based on the following encodings: 0: ADDR0 range unused. 1: The [IA32_RTIT_ADDR0_A..IA32_RTIT_ADDR0_B] range defines a FilterEn range. FilterEn will only be set when the IP is within this range, though other FilterEn ranges can additionally be used. See Section 33.2.5.3 for details on IP filtering. 2: The [IA32_RTIT_ADDR0_A..IA32_RTIT_ADDR0_B] range defines a TraceStop range. TraceStop will be asserted if code branches into this range. See 4.2.8 for details on TraceStop. 3..15: Reserved (#GP). This field is reserved if CPUID.(EAX=14H, ECX=1):EBX.RANGECNT[2:0] < 1.
39:36	ADDR1_CFG	0	Configures the base/limit register pair IA32_RTIT_ADDR1_A/B based on the following encodings: 0: ADDR1 range unused. 1: The [IA32_RTIT_ADDR1_A..IA32_RTIT_ADDR1_B] range defines a FilterEn range. FilterEn will only be set when the IP is within this range, though other FilterEn ranges can additionally be used. See Section 33.2.5.3 for details on IP filtering. 2: The [IA32_RTIT_ADDR1_A..IA32_RTIT_ADDR1_B] range defines a TraceStop range. TraceStop will be asserted if code branches into this range. See Section 33.4.2.10 for details on TraceStop. 3..15: Reserved (#GP). This field is reserved if CPUID.(EAX=14H, ECX=1):EBX.RANGECNT[2:0] < 2.

Table 33-6. IA32_RTIT_CTL MSR (Contd.)

Position	Bit Name	At Reset	Bit Description
43:40	ADDR2_CFG	0	Configures the base/limit register pair IA32_RTIT_ADDR2_A/B based on the following encodings: 0: ADDR2 range unused. 1: The [IA32_RTIT_ADDR2_A..IA32_RTIT_ADDR2_B] range defines a FilterEn range. FilterEn will only be set when the IP is within this range, though other FilterEn ranges can additionally be used. See Section 33.2.5.3 for details on IP filtering. 2: The [IA32_RTIT_ADDR2_A..IA32_RTIT_ADDR2_B] range defines a TraceStop range. TraceStop will be asserted if code branches into this range. See Section 33.4.2.10 for details on TraceStop. 3..15: Reserved (#GP). This field is reserved if CPUID.(EAX=14H, ECX=1):EBX.RANGECNT[2:0] < 3.
47:44	ADDR3_CFG	0	Configures the base/limit register pair IA32_RTIT_ADDR3_A/B based on the following encodings: 0: ADDR3 range unused. 1: The [IA32_RTIT_ADDR3_A..IA32_RTIT_ADDR3_B] range defines a FilterEn range. FilterEn will only be set when the IP is within this range, though other FilterEn ranges can additionally be used. See Section 33.2.5.3 for details on IP filtering. 2: The [IA32_RTIT_ADDR3_A..IA32_RTIT_ADDR3_B] range defines a TraceStop range. TraceStop will be asserted if code branches into this range. See Section 33.4.2.10 for details on TraceStop. 3..15: Reserved (#GP). This field is reserved if CPUID.(EAX=14H, ECX=1):EBX.RANGECNT[2:0] < 4.
54:48	Reserved	0	Reserved only for future trace content enables, or address filtering configuration enables. Must be 0.
55	DisTNT	0	0: Include TNT packets in control flow trace. 1: Omit TNT packets from control flow trace. This bit is reserved when CPUID.(EAX=14H, ECX=0):EBX[bit 8] ("TNT Disable Supported") is 0. SeeSection 33.3.9 for details.
56	InjectPsbPmiOnEnable	0	1: Enables use of IA32_RTIT_STATUS bits PendPSB[6] and PendTopaPMI[7], see Section 33.2.8.4, "IA32_RTIT_STATUS MSR" for behavior of these bits. 0: IA32_RTIT_STATUS bits 6 and 7 are ignored. This field is reserved if CPUID.(EAX=14H, ECX=0):EBX[bit 6] = 0.
59:57	Reserved	0	Reserved only for future trace content enables, or address filtering configuration enables. Must be 0.
63:60	Reserved	0	Must be 0.

33.2.8.3 Enabling and Disabling Packet Generation with TraceEn

When TraceEn transitions from 0 to 1, Intel Processor Trace is enabled, and a series of packets may be generated. These packets help ensure that the decoder is aware of the state of the processor when the trace begins, and that it can keep track of any timing or state changes that may have occurred while packet generation was disabled. A full PSB+ (see Section 33.4.2.17) will be generated if IA32_RTIT_STATUS.PacketByteCnt=0, and may be generated in other cases as well. Otherwise, timing packets will be generated, including TSC, TMA, and CBR (see Section 33.4.1.1).

In addition to the packets discussed above, if and when PacketEn (Section 33.2.6.1) transitions from 0 to 1 (which may happen immediately, depending on filtering settings), a TIP.PGE packet (Section 33.4.2.3) will be generated.

When TraceEn is set, the processor may read ToPA entries from memory and cache them internally. For this reason, software should disable packet generation before making modifications to the ToPA tables (or changing the config-

uration of restricted memory regions). See Section 33.7 for more details of packets that may be generated with modifications to TraceEn.

Disabling Packet Generation

Clearing TraceEn causes any packet data buffered within the logical processor to be flushed out, after which the output MSRs (IA32_RTIT_OUTPUT_BASE and IA32_RTIT_OUTPUT_MASK_PTRS) will have stable values. When output is directed to memory, a store, fence, or architecturally serializing instruction may be required to ensure that the packet data is globally observed. No special packets are generated by disabling packet generation, though a TIP.PGD may result if PacketEn=1 at the time of disable.

Other Writes to IA32_RTIT_CTL

Any attempt to modify IA32_RTIT_CTL while TraceEn is set will result in a general-protection fault (#GP) unless the same write also clears TraceEn. However, writes to IA32_RTIT_CTL that do not modify any bits will not cause a #GP, even if TraceEn remains set.

33.2.8.4 IA32_RTIT_STATUS MSR

The IA32_RTIT_STATUS MSR is readable and writable by software, though some fields cannot be modified by software. See Table 33-7 for details. The WRMSR instruction ignores these bits in the source operand (attempts to modify these bits are ignored and do not cause WRMSR to fault).

This MSR can only be written when IA32_RTIT_CTL.TraceEn is 0; otherwise WRMSR causes a general-protection fault (#GP). The processor does not modify the value of this MSR while TraceEn is 0 (software can modify it with WRMSR).

Table 33-7. IA32_RTIT_STATUS MSR

Position	Bit Name	At Reset	Bit Description
0	FilterEn	0	This bit is written by the processor, and indicates that tracing is allowed for the current IP, see Section 33.2.6.5. Writes are ignored.
1	ContextEn	0	The processor sets this bit to indicate that tracing is allowed for the current context. See Section 33.2.6.3. Writes are ignored.
2	TriggerEn	0	The processor sets this bit to indicate that tracing is enabled. See Section 33.2.6.2. Writes are ignored.
3	Reserved	0	Must be 0.
4	Error	0	The processor sets this bit to indicate that an operational error has been encountered. When this bit is set, TriggerEn is cleared to 0 and packet generation is disabled. For details, see "ToPA Errors" in Section 33.2.7.2. When TraceEn is cleared, software can write this bit. Once it is set, only software can clear it. It is not recommended that software ever set this bit, except in cases where it is restoring a prior saved state.
5	Stopped	0	The processor sets this bit to indicate that a ToPA Stop condition has been encountered. When this bit is set, TriggerEn is cleared to 0 and packet generation is disabled. For details, see "ToPA STOP" in Section 33.2.7.2. When TraceEn is cleared, software can write this bit. Once it is set, only software can clear it. It is not recommended that software ever set this bit, except in cases where it is restoring a prior saved state.
6	PendPSB	0	If IA32_RTIT_CTL.InjectPsbPmiOnEnable[56] = 1, the processor sets this bit when the threshold for a PSB+ to be inserted has been reached. The processor will clear this bit when the PSB+ has been inserted into the trace. If PendPSB = 1 and InjectPsbPmiOnEnable = 1 when IA32_RTIT_CTL.TraceEn[0] transitions from 0 to 1, a PSB+ will be inserted into the trace. This field is reserved if CPUID.(EAX=14H, ECX=0):EBX[bit 6] = 0.

Table 33-7. IA32_RTIT_STATUS MSR

Position	Bit Name	At Reset	Bit Description
7	PendTopaPMI	0	If IA32_RTIT_CTL.InjectPsbPmiOnEnable[56] = 1, the processor sets this bit when the threshold for a ToPA PMI to be inserted has been reached. Software should clear this bit once the ToPA PMI has been handled, see "ToPA PMI" for details. If PendTopaPMI = 1 and InjectPsbPmiOnEnable = 1 when IA32_RTIT_CTL.TraceEn[0] transitions from 0 to 1, a PMI will be pended. This field is reserved if CPUID.(EAX=14H, ECX=0):EBX[bit 6] = 0.
31:8	Reserved	0	Must be 0.
48:32	PacketByteCnt	0	This field is written by the processor, and holds a count of packet bytes that have been sent out. The processor also uses this field to determine when the next PSB packet should be inserted. Note that the processor may clear or modify this field at any time while IA32_RTIT_CTL.TraceEn=1. It will have a stable value when IA32_RTIT_CTL.TraceEn=0. See Section 33.4.2.17 for details. This field is reserved when CPUID.(EAX=14H,ECX=0):EBX[bit 1] ("Configurable PSB and CycleAccurate Mode Supported") is 0.
63:49	Reserved	0	Must be 0.

33.2.8.5 IA32_RTIT_ADDRn_A and IA32_RTIT_ADDRn_B MSRs

The role of the IA32_RTIT_ADDRn_A/B register pairs, for each n, is determined by the corresponding ADDRn_CFG fields in IA32_RTIT_CTL (see Section 33.2.8.2). The number of these register pairs is enumerated by CPUID.(EAX=14H, ECX=1):EAX.RANGECNT[2:0].

- Processors that enumerate support for 1 range support:

  IA32_RTIT_ADDR0_A, IA32_RTIT_ADDR0_B
- Processors that enumerate support for 2 ranges support:

  IA32_RTIT_ADDR0_A, IA32_RTIT_ADDR0_B

  IA32_RTIT_ADDR1_A, IA32_RTIT_ADDR1_B
- Processors that enumerate support for 3 ranges support:

  IA32_RTIT_ADDR0_A, IA32_RTIT_ADDR0_B

  IA32_RTIT_ADDR1_A, IA32_RTIT_ADDR1_B

  IA32_RTIT_ADDR2_A, IA32_RTIT_ADDR2_B
- Processors that enumerate support for 4 ranges support:

  IA32_RTIT_ADDR0_A, IA32_RTIT_ADDR0_B

  IA32_RTIT_ADDR1_A, IA32_RTIT_ADDR1_B

  IA32_RTIT_ADDR2_A, IA32_RTIT_ADDR2_B

  IA32_RTIT_ADDR3_A, IA32_RTIT_ADDR3_B

Each register has a single 64-bit field that holds a linear address value. Writes must ensure that the address is in canonical form, otherwise a general-protection fault (#GP) fault will result.

Each MSR can be written only when IA32_RTIT_CTL.TraceEn is 0; otherwise WRMSR causes a general-protection fault (#GP).

33.2.8.6 IA32_RTIT_CR3_MATCH MSR

The IA32_RTIT_CR3_MATCH register is compared against CR3 when IA32_RTIT_CTL.CR3Filter is 1. Bits 63:5 hold the CR3 address value to match, bits 4:0 are reserved to 0. For more details on CR3 filtering and the treatment of this register, see Section 33.2.5.2.

This MSR is accessible if CPUID.(EAX=14H, ECX=0):EBX[bit 0], "CR3 Filtering Support", is 1. This MSR can be written only when IA32_RTIT_CTL.TraceEn is 0; otherwise WRMSR causes a general-protection fault (#GP).

IA32_RTIT_CR3_MATCH[4:0] are reserved and must be 0; an attempt to set those bits using WRMSR causes a #GP.

33.2.8.7 IA32_RTIT_OUTPUT_BASE MSR

This MSR is used to configure the trace output destination, when output is directed to memory (IA32_RTIT_CTL.FabricEn = 0). The size of the address field is determined by the maximum physical address width (MAXPHYADDR), as reported by CPUID.80000008H:EAX[7:0].

When the ToPA output scheme is used, the processor may update this MSR when packet generation is enabled, and those updates are asynchronous to instruction execution. Therefore, the values in this MSR should be considered unreliable unless packet generation is disabled (IA32_RTIT_CTL.TraceEn = 0).

Accesses to this MSR are supported only if Intel PT output to memory is supported, hence when either CPUID.(EAX=14H, ECX=0):ECX[bit 0] or CPUID.(EAX=14H, ECX=0):ECX[bit 2] are set. Otherwise WRMSR or RDMSR cause a general-protection fault (#GP). If supported, this MSR can be written only when IA32_RTIT_CTL.TraceEn is 0; otherwise WRMSR causes a general-protection fault (#GP).

Table 33-8. IA32_RTIT_OUTPUT_BASE MSR

Position	Bit Name	At Reset	Bit Description
6:0	Reserved	0	Must be 0.
MAXPHYADDR-1:7	BasePhysAddr	0	The base physical address. How this address is used depends on the value of IA32_RTIT_CTL.ToPA: 0: This is the base physical address of a single, contiguous physical output region. This could be mapped to DRAM or to MMIO, depending on the value. The base address should be aligned with the size of the region, such that none of the 1s in the mask value(Section 33.2.8.8) overlap with 1s in the base address. If the base is not aligned, an operational error will result (see Section 33.3.10). 1: The base physical address of the current ToPA table. The address must be 4K aligned. Writing an address in which bits 11:7 are non-zero will not cause a #GP, but an operational error will be signaled once TraceEn is set. See "ToPA Errors" in Section 33.2.7.2 as well as Section 33.3.10.
63:MAXPHYADDR	Reserved	0	Must be 0.

33.2.8.8 IA32_RTIT_OUTPUT_MASK_PTRS MSR

This MSR holds any mask or pointer values needed to indicate where the next byte of trace output should be written. The meaning of the values held in this MSR depend on whether the ToPA output mechanism is in use. See Section 33.2.7.2 for details.

The processor updates this MSR while when packet generation is enabled, and those updates are asynchronous to instruction execution. Therefore, the values in this MSR should be considered unreliable unless packet generation is disabled (IA32_RTIT_CTL.TraceEn = 0).

Accesses to this MSR are supported only if Intel PT output to memory is supported, hence when either CPUID.(EAX=14H, ECX=0):ECX[bit 0] or CPUID.(EAX=14H, ECX=0):ECX[bit 2] are set. Otherwise WRMSR or RDMSR cause a general-protection fault (#GP). If supported, this MSR can be written only when IA32_RTIT_CTL.TraceEn is 0; otherwise WRMSR causes a general-protection fault (#GP).

Table 33-9. IA32_RTIT_OUTPUT_MASK_PTRS MSR

Position	Bit Name	At Reset	Bit Description
6:0	LowerMask	7FH	Forced to 1, writes are ignored.
31:7	MaskOrTableOffset	0	The use of this field depends on the value of IA32_RTIT_CTL.ToPA: 0: This field holds bits 31:7 of the mask value for the single, contiguous physical output region. The size of this field indicates that regions can be of size 128B up to 4GB. This value (combined with the lower 7 bits, which are reserved to 1) will be ANDed with the OutputOffset field to determine the next write address. All 1s in this field should be consecutive and starting at bit 7, otherwise the region will not be contiguous, and an operational error (Section 33.3.10) will be signaled when TraceEn is set. 1: This field holds bits 27:3 of the offset pointer into the current ToPA table. This value can be added to the IA32_RTIT_OUTPUT_BASE value to produce a pointer to the current ToPA table entry, which itself is a pointer to the current output region. In this scenario, the lower 7 reserved bits are ignored. This field supports tables up to 256 MBytes in size.
63:32	OutputOffset	0	The use of this field depends on the value of IA32_RTIT_CTL.ToPA: 0: This is bits 31:0 of the offset pointer into the single, contiguous physical output region. This value will be added to the IA32_RTIT_OUTPUT_BASE value to form the physical address at which the next byte of packet output data will be written. This value must be less than or equal to the MaskOrTableOffset field, otherwise an operational error (Section 33.3.10) will be signaled when TraceEn is set. 1: This field holds bits 31:0 of the offset pointer into the current ToPA output region. This value will be added to the output region base field, found in the current ToPA table entry, to form the physical address at which the next byte of trace output data will be written. This value must be less than the ToPA entry size, otherwise an operational error (Section 33.3.10) will be signaled when TraceEn is set.

33.2.9 Interaction of Intel® Processor Trace and Other Processor Features

33.2.9.1 Intel® Transactional Synchronization Extensions (Intel® TSX)

The operation of Intel TSX is described in Chapter 14 of the *Intel® 64 and IA-32 Architectures Software Developer's Manual, Volume 1*. For tracing purpose, packet generation does not distinguish between hardware lock elision (HLE) and restricted transactional memory (RTM), but speculative execution does have impacts on the trace output. Specifically, packets are generated as instructions complete, even for instructions in a transactional region that is later aborted. For this reason, debugging software will need indication of the beginning and end of a transactional region; this will allow software to understand when instructions are part of a transactional region and whether that region has been committed.

To enable this, TSX information is included in a MODE packet leaf. The mode bits in the leaf are:

- **InTX**: Set to 1 on an TSX transaction begin, and cleared on transaction commit or abort.
- **TXAbort**: Set to 1 only when InTX transitions from 1 to 0 on an abort. Cleared otherwise.

If BranchEn=1, this MODE packet will be sent each time the transaction status changes. See Table 33-10 for details.

Table 33-10. TSX Packet Scenarios with BranchEn=1

TSX Event	Instruction	Packets
Transaction Begin	Either XBEGIN or XACQUIRE lock (the latter if executed transactionally)	MODE(TXAbort=0, InTX=1), FUP(CurrentIP)
Transaction Commit	Either XEND or XRELEASE lock, if transactional execution ends. This happens only on the outermost commit	MODE(TXAbort=0, InTX=0), FUP(CurrentIP)

Table 33-10. TSX Packet Scenarios with BranchEn=1

TSX Event	Instruction	Packets
Transaction Abort	XABORT or other transactional abort	MODE(TXAbort=1, InTX=0), FUP(CurrentIP), TIP(TargetIP)
Other	One of the following: ▪ Nested XBEGIN or XACQUIRE lock ▪ An outer XACQUIRE lock that doesn't begin a transaction (InTX not set) ▪ Non-outermost XEND or XRELEASE lock	None. No change to TSX mode bits for these cases.

The CurrentIP listed above is the IP of the associated instruction. The TargetIP is the IP of the next instruction to be executed; for HLE, this is the XACQUIRE lock; for RTM, this is the fallback handler.

Intel PT stores are non-transactional, and thus packet writes are not rolled back on TSX abort.

33.2.9.2 TSX and IP Filtering

A complication with tracking transactions is handling transactions that start or end outside of the tracing region. Transactions can't span across a change in ContextEn, because CPL changes and CR3 changes each cause aborts. But a transaction can start within the IP filter region and end outside it.

To assist the decoder handling this situation, MODE.TSX packets can be sent even if FilterEn=0, though there will be no FUP attached. Instead, they will merely serve to indicate to the decoder when transactions are active and when they are not. When tracing resumes (due to PacketEn=1), the last MODE.TSX preceding the TIP.PGE will indicate the current transaction status.

33.2.9.3 System Management Mode (SMM)

SMM code has special privileges that non-SMM code does not have. Intel Processor Trace can be used to trace SMM code, but special care is taken to ensure that SMM handler context is not exposed in any non-SMM trace collection. Additionally, packet output from tracing non-SMM code cannot be written into memory space that is either protected by SMRR or used by the SMM handler.

SMM is entered via a system management interrupt (SMI). SMI delivery saves the value of IA32_RTIT_CTL.TraceEn into SMRAM and then clears it, thereby disabling packet generation.

The saving and clearing of IA32_RTIT_CTL.TraceEn ensures two things:

1. All internally buffered packet data is flushed before entering SMM (see Section 33.2.8.2).
2. Packet generation ceases before entering SMM, so any tracing that was configured outside SMM does not continue into SMM. No SMM instruction pointers or other state will be exposed in the non-SMM trace.

When the RSM instruction is executed to return from SMM, the TraceEn value that was saved by SMI delivery is restored, allowing tracing to be resumed. As is done any time packet generation is enabled, ContextEn is re-evaluated, based on the values of CPL, CR3, etc., established by RSM.

Like other interrupts, delivery of an SMI produces a FUP containing the IP of the next instruction to execute. By toggling TraceEn, SMI and RSM can produce TIP.PGD and TIP.PGE packets, respectively, indicating that tracing was disabled or re-enabled. See Table 33.7 for more information about packets entering and leaving SMM.

Although #SMI and RSM change CR3, PIP packets are not generated in these cases. With #SMI tracing is disabled before the CR3 change; with RSM TraceEn is restored after CR3 is written.

TraceEn must be cleared before executing RSM, otherwise it will cause a shutdown. Further, on processors that restrict use of Intel PT with LBRs (see Section 33.3.1.2), any RSM that results in enabling of both will cause a shutdown.

Intel PT can support tracing of System Transfer Monitor operating in SMM, see Section 33.6.

33.2.9.4 Virtual-Machine Extensions (VMX)

Initial implementations of Intel Processor Trace do not support tracing in VMX operation. Such processors indicate this by returning 0 for IA32_VMX_MISC[bit 14]. On these processors, execution of the VMXON instruction clears IA32_RTIT_CTL.TraceEn and any attempt to write IA32_RTIT_CTL in VMX operation causes a general-protection exception (#GP).

Processors that support Intel Processor Trace in VMX operation return 1 for IA32_VMX_MISC[bit 14]. Details of tracing in VMX operation are described in Section 33.4.2.26.

33.2.9.5 Intel® Software Guard Extensions (Intel® SGX)

Intel SGX provides an application with the ability to instantiate a protective container (an enclave) with confidentiality and integrity (see the *Intel® 64 and IA-32 Architectures Software Developer's Manual, Volume 3D*). On a processor with both Intel PT and Intel SGX enabled, when executing code within a production enclave, no control flow packets are produced by Intel PT. An enclave entry will clear ContextEn, thereby blocking control flow packet generation. A TIP.PGD packet will be generated if PacketEn=1 at the time of the entry.

Upon enclave exit, ContextEn will no longer be forced to 0. If other enables are set at the time, a TIP.PGE may be generated to indicate that tracing is resumed.

During the enclave execution, Intel PT remains enabled, and periodic or timing packets such as PSB, TSC, MTC, or CBR can still be generated. No IPs or other architectural state will be exposed.

For packet generation examples on enclave entry or exit, see Section 33.7.

Debug Enclaves

Intel SGX allows an enclave to be configured with relaxed protection of confidentiality for debug purposes, see the *Intel® 64 and IA-32 Architectures Software Developer's Manual, Volume 3D*. In a debug enclave, Intel PT continues to function normally. Specifically, ContextEn is not impacted by an enclave entry or exit. Hence, the generation of ContextEn-dependent packets within a debug enclave is allowed.

33.2.9.6 SENTER/ENTERACCS and ACM

GETSEC[SENTER] and GETSEC[ENTERACCS] instructions clear TraceEn, and it is not restored when those instruction complete. SENTER also causes TraceEn to be cleared on other logical processors when they rendezvous and enter the SENTER sleep state. In these two cases, the disabling of packet generation is not guaranteed to flush internally buffered packets. Some packets may be dropped.

When executing an authenticated code module (ACM), packet generation is silently disabled during ACRAM setup. TraceEn will be cleared, but no TIP.PGD packet is generated. After completion of the module, the TraceEn value will be restored. There will be no TIP.PGE packet, but timing packets, like TSC and CBR, may be produced.

33.2.9.7 Intel® Memory Protection Extensions (Intel® MPX)

Bounds exceptions (#BR) caused by Intel MPX are treated like other exceptions, producing FUP and TIP packets that indicate the source and destination IPs.

33.3 CONFIGURATION AND PROGRAMMING GUIDELINE

33.3.1 Detection of Intel Processor Trace and Capability Enumeration

Processor support for Intel Processor Trace is indicated by CPUID.(EAX=07H,ECX=0H):EBX[bit 25] = 1. CPUID function 14H is dedicated to enumerate the resource and capability of processors that report CPUID.(EAX=07H,ECX=0H):EBX[bit 25] = 1. Different processor generations may have architecturally-defined variation in capabilities. Table 33-11 describes details of the enumerable capabilities that software must use across generations of processors that support Intel Processor Trace.

Table 33-11. CPUID Leaf 14H Enumeration of Intel Processor Trace Capabilities

CPUID.(EAX=14H,ECX=0)		Name	Description Behavior
Register	Bits		
EAX	31:0	Maximum valid sub-leaf Index	Specifies the index of the maximum valid sub-leaf for this CPUID leaf.
EBX	0	CR3 Filtering Support	1: Indicates that IA32_RTIT_CTL.CR3Filter can be set to 1, and that IA32_RTIT_CR3_MATCH MSR can be accessed. See Section 33.2.8. 0: Indicates that writes that set IA32_RTIT_CTL.CR3Filter to 1, or any access to IA32_RTIT_CR3_MATCH, will generate a #GP exception.
	1	Configurable PSB and Cycle-Accurate Mode Supported	1: (a) IA32_RTIT_CTL.PSBFreq can be set to a non-zero value, in order to select the preferred PSB frequency (see below for allowed values). (b) IA32_RTIT_STATUS.PacketByteCnt can be set to a non-zero value, and will be incremented by the processor when tracing to indicate progress towards the next PSB. If trace packet generation is enabled by setting TraceEn, a PSB will only be generated if PacketByteCnt=0. (c) IA32_RTIT_CTL.CYCEn can be set to 1 to enable Cycle-Accurate Mode. See Section 33.2.8. 0: (a) Any attempt to write a non-zero value to IA32_RTIT_CTL.PSBFreq or IA32_RTIT_STATUS.PacketByteCnt will generate a #GP exception. (b) If trace packet generation is enabled by setting TraceEn, a PSB is always generated. (c) Any attempt to write a non-zero value to IA32_RTIT_CTL.CYCEn or IA32_RTIT_CTL.CycThresh will generate a #GP exception.
	2	IP Filtering and TraceStop supported, and Preserve Intel PT MSRs across warm reset	1: (a) IA32_RTIT_CTL provides at one or more ADDRn_CFG field to configure the corresponding address range MSRs for IP Filtering or IP TraceStop. Each ADDRn_CFG field accepts a value in the range of 0:2 inclusive. The number of ADDRn_CFG fields is reported by CPUID.(EAX=14H, ECX=1):EAX.RANGECNT[2:0]. (b) At least one register pair IA32_RTIT_ADDRn_A and IA32_RTIT_ADDRn_B are provided to configure address ranges for IP filtering or IP TraceStop. (c) On warm reset, all Intel PT MSRs will retain their pre-reset values, though IA32_RTIT_CTL.TraceEn will be cleared. The Intel PT MSRs are listed in Section 33.2.8. 0: (a) An Attempt to write IA32_RTIT_CTL.ADDRn_CFG with non-zero encoding values will cause #GP. (b) Any access to IA32_RTIT_ADDRn_A and IA32_RTIT_ADDRn_B, will generate a #GP exception. (c) On warm reset, all Intel PT MSRs will be cleared.
	3	MTC Supported	1: IA32_RTIT_CTL.MTCEn can be set to 1, and MTC packets will be generated. See Section 33.2.8. 0: An attempt to set IA32_RTIT_CTL.MTCEn or IA32_RTIT_CTL.MTCFreq to a non-zero value will generate a #GP exception.
	4	PTWRITE Supported	1: Writes can set IA32_RTIT_CTL[12] (PTWEn) and IA32_RTIT_CTL[5] (FUPonPTW), and PTWRITE can generate packets. 0: Writes that set IA32_RTIT_CTL[12] or IA32_RTIT_CTL[5] will generate a #GP exception, and PTWRITE will #UD fault.
	5	Power Event Trace Supported	1: Writes can set IA32_RTIT_CTL[4] (PwrEvtEn), enabling Power Event Trace packet generation. 0: Writes that set IA32_RTIT_CTL[4] will generate a #GP exception.

Table 33-11. CPUID Leaf 14H Enumeration of Intel Processor Trace Capabilities (Contd.)

CPUID.(EAX=14H,ECX=0)		Name	Description Behavior
Register	Bits		
	6	PSB and PMI Preservation Supported	1: Writes can set IA32_RTIT_CTL[56] (InjectPsbPmiOnEnable), enabling the processor to set IA32_RTIT_STATUS[7] (PendTopaPMI) and/or IA32_RTIT_STATUS[6] (PendPSB) in order to preserve ToPA PMIs and/or PSBs otherwise lost due to Intel PT disable. Writes can also set PendToPAPMI and PendPSB. 0: Writes that set IA32_RTIT_CTL[56], IA32_RTIT_STATUS[7], or IA32_RTIT_STATUS[6] will generate a #GP exception.
	7	Event Trace Supported	1: Writes can set IA32_RTIT_CTL[31] (EventEn), enabling Event Trace packet generation. 0: Writes that set IA32_RTIT_CTL[31] will generate a #GP exception.
	8	TNT Disable Supported	1: Writes can set IA32_RTIT_CTL[55] (DisTNT), disabling TNT packet generation. 0: Writes that set IA32_RTIT_CTL[55] will generate a #GP exception.
	31:9	Reserved	
ECX	0	ToPA Output Supported	1: Tracing can be enabled with IA32_RTIT_CTL.ToPA = 1, hence utilizing the ToPA output scheme (Section 33.2.7.2) IA32_RTIT_OUTPUT_BASE and IA32_RTIT_OUTPUT_MASK_PTRS MSRs can be accessed. 0: Unless CPUID.(EAX=14H, ECX=0):ECX.SNGLRNGOUT[bit 2] = 1. writes to IA32_RTIT_OUTPUT_BASE or IA32_RTIT_OUTPUT_MASK_PTRS. MSRs will generate a #GP exception.
	1	ToPA Tables Allow Multiple Output Entries	1: ToPA tables can hold any number of output entries, up to the maximum allowed by the MaskOrTableOffset field of IA32_RTIT_OUTPUT_MASK_PTRS. 0: ToPA tables can hold only one output entry, which must be followed by an END=1 entry which points back to the base of the table. Further, ToPA PMIs will be delivered before the region is filled. See ToPA PMI in Section 33.2.7.2. If there is more than one output entry before the END entry, or if the END entry has the wrong base address, an operational error will be signaled (see "ToPA Errors" in Section 33.2.7.2).
	2	Single-Range Output Supported	1: Enabling tracing (TraceEn=1) with IA32_RTIT_CTL.ToPA=0 is supported. 0: Unless CPUID.(EAX=14H, ECX=0):ECX.TOPAOUT[bit 0] = 1. writes to IA32_RTIT_OUTPUT_BASE or IA32_RTIT_OUTPUT_MASK_PTRS. MSRs will generate a #GP exception.
	3	Output to Trace Transport Subsystem Supported	1: Setting IA32_RTIT_CTL.FabricEn to 1 is supported. 0: IA32_RTIT_CTL.FabricEn is reserved. Write 1 to IA32_RTIT_CTL.FabricEn will generate a #GP exception.
	30:4	Reserved	
	31	IP Payloads are LIP	1: Generated packets which contain IP payloads have LIP values, which include the CS base component. 0: Generated packets which contain IP payloads have RIP values, which are the offset from CS base.
EDX	31:0	Reserved	

If CPUID.(EAX=14H, ECX=0):EAX reports a non-zero value, additional capabilities of Intel Processor Trace are described in the sub-leaves of CPUID leaf 14H.

Table 33-12. CPUID Leaf 14H, sub-leaf 1H Enumeration of Intel Processor Trace Capabilities

CPUID.(EAX=14H,ECX=1)		Name	Description Behavior
Register	Bits		
EAX	2:0	Number of Address Ranges	A non-zero value specifies the number ADDRn_CFG field supported in IA32_RTIT_CTL and the number of register pair IA32_RTIT_ADDRn_A/IA32_RTIT_ADDRn_B supported for IP filtering and IP TraceStop. **NOTE:** Currently, no processors support more than 4 address ranges.
	15:3	Reserved	
	31:16	Bitmap of supported MTC Period Encodings	The non-zero bits indicate the map of supported encoding values for the IA32_RTIT_CTL.MTCFreq field. This applies only if CPUID.(EAX=14H, ECX=0):EBX[bit 3] = 1 (MTC Packet generation is supported), otherwise the MTCFreq field is reserved to 0. Each bit position in this field represents 1 encoding value in the 4-bit MTCFreq field (ie, bit 0 is associated with encoding value 0). For each bit: 1: MTCFreq can be assigned the associated encoding value. 0: MTCFreq cannot be assigned to the associated encoding value. A write to IA32_RTIT_CTLMTCFreq with unsupported encoding will cause #GP fault.
EBX	15:0	Bitmap of supported Cycle Threshold values	The non-zero bits indicate the map of supported encoding values for the IA32_RTIT_CTL.CycThresh field. This applies only if CPUID.(EAX=14H, ECX=0):EBX[bit 1] = 1 (Cycle-Accurate Mode is Supported), otherwise the CycThresh field is reserved to 0. See Section 33.2.8. Each bit position in this field represents 1 encoding value in the 4-bit CycThresh field (ie, bit 0 is associated with encoding value 0). For each bit: 1: CycThresh can be assigned the associated encoding value. 0: CycThresh cannot be assigned to the associated encoding value. A write to CycThresh with unsupported encoding will cause #GP fault.
	31:16	Bitmap of supported Configurable PSB Frequency encoding	The non-zero bits indicate the map of supported encoding values for the IA32_RTIT_CTL.PSBFreq field. This applies only if CPUID.(EAX=14H, ECX=0):EBX[bit 1] = 1 (Configurable PSB is supported), otherwise the PSBFreq field is reserved to 0. See Section 33.2.8. Each bit position in this field represents 1 encoding value in the 4-bit PSBFreq field (ie, bit 0 is associated with encoding value 0). For each bit: 1: PSBFreq can be assigned the associated encoding value. 0: PSBFreq cannot be assigned to the associated encoding value. A write to PSBFreq with unsupported encoding will cause #GP fault.
ECX	31:0	Reserved	
EDX	31:0	Reserved	

33.3.1.1 Packet Decoding of RIP versus LIP

FUP, TIP, TIP.PGE, and TIP.PGE packets can contain an instruction pointer (IP) payload. On some processor generations, this payload will be an effective address (RIP), while on others this will be a linear address (LIP). In the former case, the payload is the offset from the current CS base address, while in the latter it is the sum of the offset and the CS base address (Note that in real mode, the CS base address is the value of CS<<4, while in protected mode the CS base address is the base linear address of the segment indicated by the CS register.). Which IP type is in use is indicated by enumeration (see CPUID.(EAX=14H, ECX=0):ECX.LIP[bit 31] in Table 33-11).

For software that executes while the CS base address is 0 (including all software executing in 64-bit mode), the difference is indistinguishable. A trace decoder must account for cases where the CS base address is not 0 and the resolved LIP will not be evident in a trace generated on a CPU that enumerates use of RIP. This is likely to cause problems when attempting to link the trace with the associated binaries.

Note that IP comparison logic, for IP filtering and TraceStop range calculation, is based on the same IP type as these IP packets. For processors that output RIP, the IP comparison mechanism is also based on RIP, and hence on those processors RIP values should be written to IA32_RTIT_ADDRn_[AB] MSRs. This can produce differing behavior if the same trace configuration setting is run on processors reporting different IP types, i.e., CPUID.(EAX=14H, ECX=0):ECX.LIP[bit 31]. Care should be taken to check CPUID when configuring IP filters.

33.3.1.2 Model Specific Capability Restrictions

Some processor generations impose restrictions that prevent use of LBRs/BTS/BTM/LERs when software has enabled tracing with Intel Processor Trace. On these processors, when TraceEn is set, updates of LBR, BTS, BTM, LERs are suspended but the states of the corresponding IA32_DEBUGCTL control fields remained unchanged as if it were still enabled. When TraceEn is cleared, the LBR array is reset, and LBR/BTS/BTM/LERs updates will resume. Further, reads of these registers will return 0, and writes will be dropped.

The list of MSRs whose updates/accesses are restricted follows.

- MSR_LASTBRANCH_x_TO_IP, MSR_LASTBRANCH_x_FROM_IP, MSR_LBR_INFO_x, MSR_LASTBRANCH_TOS
- MSR_LER_FROM_LIP, MSR_LER_TO_LIP
- MSR_LBR_SELECT

For processors with CPUID DisplayFamily_DisplayModel signatures of 06_3DH, 06_47H, 06_4EH, 06_4FH, 06_56H, and 06_5EH, the use of Intel PT and LBRs are mutually exclusive.

33.3.2 Enabling and Configuration of Trace Packet Generation

To configure trace packets, enable packet generation, and capture packets, software starts with using CPUID instruction to detect its feature flag, CPUID.(EAX=07H,ECX=0H):EBX[bit 25] = 1; followed by enumerating the capabilities described in Section 33.3.1.

Based on the capability queried from Section 33.3.1, software must configure a number of model-specific registers. This section describes programming considerations related to those MSRs.

33.3.2.1 Enabling Packet Generation

When configuring and enabling packet generation, the IA32_RTIT_CTL MSR should be written after any other Intel PT MSRs have been written, since writes to the other configuration MSRs cause a general-protection fault (#GP) if TraceEn = 1. If a prior trace collection context is not being restored, then software should first clear IA32_RTIT_STATUS. This is important since the Stopped, and Error fields are writable; clearing the MSR clears any values that may have persisted from prior trace packet collection contexts. See Section 33.2.8.2 for details of packets generated by setting TraceEn to 1.

If setting TraceEn to 1 causes an operational error (see Section 33.3.10), there may be a delay after the WRMSR completes before the error is signaled in the IA32_RTIT_STATUS MSR.

While packet generation is enabled, the values of some configuration MSRs (e.g., IA32_RTIT_STATUS and IA32_RTIT_OUTPUT_*) are transient, and reads may return values that are out of date. Only after packet generation is disabled (by clearing TraceEn) do reads of these MSRs return reliable values.

33.3.2.2 Disabling Packet Generation

After disabling packet generation by clearing IA32_RTIT_CTL, it is advisable to read the IA32_RTIT_STATUS MSR (Section 33.2.8.4):

- If the Error bit is set, an operational error was encountered, and the trace is most likely compromised. Software should check the source of the error (by examining the output MSR values), correct the source of the problem, and then attempt to gather the trace again. For details on operational errors, see Section 33.3.10. Software should clear IA32_RTIT_STATUS.Error before re-enabling packet generation.
- If the Stopped bit is set, software execution encountered an IP TraceStop (see Section 33.2.5.3) or the ToPA Stop condition (see "ToPA STOP" in Section 33.2.7.2) before packet generation was disabled.

33.3.3 Flushing Trace Output

Packets are first buffered internally and then written out asynchronously. To collect packet output for post-processing, a collector needs first to ensure that all packet data has been flushed from internal buffers. Software can ensure this by stopping packet generation by clearing IA32_RTIT_CTL.TraceEn (see "Disabling Packet Generation" in Section 33.2.8.2).

When software clears IA32_RTIT_CTL.TraceEn to flush out internally buffered packets, the logical processor issues an SFENCE operation which ensures that WC trace output stores will be ordered with respect to the next store, or serializing operation. A subsequent read from the same logical processor will see the flushed trace data, while a read from another logical processor should be preceded by a store, fence, or architecturally serializing operation on the tracing logical processor.

When the flush operations complete, the IA32_RTIT_OUTPUT_* MSR values indicate where the trace ended. While TraceEn is set, these MSRs may hold stale values. Further, if a ToPA region with INT=1 is filled, meaning a ToPA PMI has been triggered, IA32_PERF_GLOBAL_STATUS.Trace_ToPA_PMI[55] will be set by the time the flush completes.

33.3.4 Warm Reset

The MSRs software uses to program Intel Processor Trace are cleared after a power-on RESET (or cold RESET). On a warm RESET, the contents of those MSRs can retain their values from before the warm RESET with the exception that IA32_RTIT_CTL.TraceEn will be cleared (which may have the side effect of clearing some bits in IA32_RTIT_STATUS).

33.3.5 Context Switch Consideration

To facilitate construction of instruction execution traces at the granularity of a software process or thread context, software can save and restore the states of the trace configuration MSRs across the process or thread context switch boundary. The principle is the same as saving and restoring the typical architectural processor states across context switches.

33.3.5.1 Manual Trace Configuration Context Switch

The configuration can be saved and restored through a sequence of instructions of RDMSR, management of MSR content and WRMSR. To stop tracing and to ensure that all configuration MSRs contain stable values, software must clear IA32_RTIT_CTL.TraceEn before reading any other trace configuration MSRs. The recommended method for saving trace configuration context manually follows:

1. RDMSR IA32_RTIT_CTL, save value to memory
2. WRMSR IA32_RTIT_CTL with saved value from RDMSR above and TraceEn cleared
3. RDMSR all other configuration MSRs whose values had changed from previous saved value, save changed values to memory

When restoring the trace configuration context, IA32_RTIT_CTL should be restored last:

1. Read saved configuration MSR values, aside from IA32_RTIT_CTL, from memory, and restore them with WRMSR
2. Read saved IA32_RTIT_CTL value from memory, and restore with WRMSR.

33.3.5.2 Trace Configuration Context Switch Using XSAVES/XRSTORS

On processors whose XSAVE feature set supports XSAVES and XRSTORS, the Trace configuration state can be saved using XSAVES and restored by XRSTORS, in conjunction with the bit field associated with supervisory state component in IA32_XSS. See Chapter 13, "Managing State Using the XSAVE Feature Set" of *Intel® 64 and IA-32 Architectures Software Developer's Manual, Volume 1*.

33.3.6 Cycle-Accurate Mode

Intel PT can be run in a cycle-accurate mode which enables CYC packets (see Section 33.4.2.14) that provide low-level information in the processor core clock domain. This cycle counter data in CYC packets can be used to compute IPC (Instructions Per Cycle), or to track wall-clock time on a fine-grain level.

To enable cycle-accurate mode packet generation, software should set IA32_RTIT_CTL.CYCEn=1. It is recommended that software also set TSCEn=1 anytime cycle-accurate mode is in use. With this, all CYC-eligible packets will be preceded by a CYC packet, the payload of which indicates the number of core clock cycles since the last CYC packet. In cases where multiple CYC-eligible packets are generated in a single cycle, only a single CYC will be generated before the CYC-eligible packets, otherwise each CYC-eligible packet will be preceded by its own CYC. The CYC-eligible packets are:

- TNT, TIP, TIP.PGE, TIP.PGD, MODE.EXEC, MODE.TSX, PIP, VMCS, OVF, MTC, TSC, PTWRITE, EXSTOP

TSC packets are generated when there is insufficient information to reconstruct wall-clock time, due to tracing being disabled (TriggerEn=0), or power down scenarios like a transition to a deep-sleep MWAIT C-state. In this case, the CYC that is generated along with the TSC will indicate the number of cycles actively tracing (those powered up, with TriggerEn=1) executed between the last CYC packet and the TSC packet. And hence the amount of time spent while tracing is inactive can be inferred from the difference in time between that expected based on the CYC value, and the actual time indicated by the TSC.

Additional CYC packets may be sent stand-alone, so that the processor can ensure that the decoder is aware of the number of cycles that have passed before the internal hardware counter wraps, or is reset due to other micro-architectural condition. There is no guarantee at what intervals these standalone CYC packets will be sent, except that they will be sent before the wrap occurs. An illustration is given below.

Example 33-1. An Illustrative CYC Packet Example

Time (cycles)	Instruction Snapshot	Generated Packets	Comment
x	call %eax	CYC(?), TIP	?Elapsed cycles from the previous CYC unknown
x + 2	call %ebx	CYC(2), TIP	1 byte CYC packet; 2 cycles elapsed from the previous CYC
x + 8	jnz Foo (not taken)	CYC(6)	1 byte CYC packet
x + 9	ret (compressed)		
x + 12	jnz Bar (taken)		
x + 16	ret (uncompressed)	TNT, CYC(8), TIP	1 byte CYC packet
x + 4111		CYC(4095)	2 byte CYC packet
x + 12305		CYC(8194)	3 byte CYC packet
x + 16332	mov cr3, %ebx	CYC(4027), PIP	2 byte CYC packet

33.3.6.1 Cycle Counter

The cycle counter is implemented in hardware (independent of the time stamp counter or performance monitoring counters), and is a simple incrementing counter that does not saturate, but rather wraps. The size of the counter is implementation specific.

The cycle counter is reset to zero any time that TriggerEn is cleared, and when a CYC packet is sent. The cycle counter will continue to count when ContextEn or FilterEn are cleared, and cycle packets will still be generated. It will not count during sleep states that result in Intel PT logic being powered-down, but will count up to the point where clocks are disabled, and resume counting once they are re-enabled.

33.3.6.2 Cycle Packet Semantics

Cycle-accurate mode adheres to the following protocol:

- All packets that precede a CYC packet represent instructions or events that took place before the CYC time.
- All packets that follow a CYC packet represent instructions or events that took place at the same time as, or after, the CYC time.
- The CYC-eligible packet that immediately follows a CYC packet represents an instruction or event that took place at the same time as the CYC time.

These items above give the decoder a means to apply CYC packets to a specific instruction in the assembly stream. Most packets represent a single instruction or event, and hence the CYC packet that precedes each of those packets represents the retirement time of that instruction or event. In the case of TNT packets, up to 6 conditional branches and/or compressed RETs may be contained in the packet. In this case, the preceding CYC packet provides the retirement time of the first branch in the packet. It is possible that multiple branches retired in the same cycle as that first branch in the TNT, but the protocol will not make that obvious. Also note that a MTC packet could be generated in the same cycle as the first JCC in the TNT packet. In this case, the CYC would precede both the MTC and the TNT, and apply to both.

Note that there are times when the cycle counter will stop counting, though cycle-accurate mode is enabled. After any such scenario, a CYC packet followed by TSC packet will be sent. See Section 33.8.3.2 to understand how to interpret the payload values

Multi-packet Instructions or Events

Some operations, such as interrupts or task switches, generate multiple packets. In these cases, multiple CYC packets may be sent for the operation, preceding each CYC-eligible packet in the operation. An example, using a task switch on a software interrupt, is shown below.

Example 33-2. An Example of CYC in the Presence of Multi-Packet Operations

Time (cycles)	Instruction Snapshot	Generated Packets
x	jnz Foo (not taken)	CYC(?),
x + 2	ret (compressed)	
x + 8	jnz Bar (taken)	
x + 9	jmp %eax	TNT, CYC(9), TIP
x + 12	jnz Bar (not taken)	CYC(3)
x + 32	int3 (task gate)	TNT, FUP, CYC(10), PIP, CYC(20), MODE.Exec, TIP

33.3.6.3 Cycle Thresholds

Software can opt to reduce the frequency of cycle packets, a trade-off to save bandwidth and intrusion at the expense of precision. This is done by utilizing a cycle threshold (see Section 33.2.8.2).

IA32_RTIT_CTL.CycThresh indicates to the processor the minimum number of cycles that must pass before the next CYC packet should be sent. If this value is 0, no threshold is used, and CYC packets can be sent every cycle in which a CYC-eligible packet is generated. If this value is greater than 0, the hardware will wait until the associated

number of cycles have passed since the last CYC packet before sending another. CPUID provides the threshold options for CycThresh, see Section 33.3.1.

Note that the cycle threshold does not dictate how frequently a CYC packet will be posted, it merely assigns the maximum frequency. If the cycle threshold is 16, a CYC packet can be posted no more frequently than every 16 cycles. However, once that threshold of 16 cycles has passed, it still requires a new CYC-eligible packet to be generated before a CYC will be inserted. Table 33-13 illustrates the threshold behavior.

Table 33-13. An Illustrative CYC Packet Example

Time (cycles)	Instruction Snapshot	Threshold			
		0	16	32	64
x	jmp %eax	CYC, TIP	CYC, TIP	CYC, TIP	CYC, TIP
x + 9	call %ebx	CYC, TIP	TIP	TIP	TIP
x + 15	call %ecx	CYC, TIP	TIP	TIP	TIP
x + 30	jmp %edx	CYC, TIP	CYC, TIP	TIP	TIP
x + 38	mov cr3, %eax	CYC, PIP	PIP	CYC, PIP	PIP
x + 46	jmp [%eax]	CYC, TIP	CYC, TIP	TIP	TIP
x + 64	call %edx	CYC, TIP	CYC, TIP	TIP	CYC,TIP
x + 71	jmp %edx	CYC, TIP	TIP	CYC,TIP	TIP

33.3.7 Decoder Synchronization (PSB+)

The PSB packet (Section 33.4.2.17) serves as a synchronization point for a trace-packet decoder. It is a pattern in the trace log for which the decoder can quickly scan to align packet boundaries. No legal packet combination can result in such a byte sequence. As such, it serves as the starting point for packet decode. To decode a trace log properly, the decoder needs more than simply to be aligned: it needs to know some state and potentially some timing information as well. The decoder should never need to retain any information (e.g., LastIP, call stack, compound packet event) across a PSB; all compound packet events will be completed before a PSB, and any compression state will be reset.

When a PSB packet is generated, it is followed by a PSBEND packet (Section 33.4.2.18). One or more packets may be generated in between those two packets, and these inform the decoder of the current state of the processor. These packets, known collectively as PSB+, should be interpreted as "status only", since they do not imply any change of state at the time of the PSB, nor are they associated directly with any instruction or event. Thus, the normal binding and ordering rules that apply to these packets outside of PSB+ can be ignored when these packets are between a PSB and PSBEND. They inform the decoder of the state of the processor at the time of the PSB.

PSB+ can include:

- Timestamp (TSC), if IA32_RTIT_CTL.TSCEn=1.
- Timestamp-MTC Align (TMA), if IA32_RTIT_CTL.TSCEn=1 && IA32_RTIT_CTL.MTCEn=1.
- Paging Information Packet (PIP), if ContextEn=1 and IA32_RTIT_CTL.OS=1. The non-root bit (NR) is set if the logical processor is in VMX non-root operation and the "conceal VMX from PT" VM-execution control is 0.
- VMCS packet, if either the logical is in VMX root operation or the logical processor is in VMX non-root operation and the "conceal VMX from PT" VM-execution control is 0.
- Core Bus Ratio (CBR).
- MODE.TSX, if ContextEn=1 and BranchEn = 1.
- MODE.Exec, if PacketEn=1.
- Flow Update Packet (FUP), if PacketEn=1.

PSB is generated only when TriggerEn=1; hence PSB+ has the same dependencies. The ordering of packets within PSB+ is not fixed. Timing packets such as CYC and MTC may be generated between PSB and PSBEND, and their meanings are the same as outside PSB+.

A PSB+ can be lost in some scenarios. If IA32_RTIT_STATUS.TriggerEn is cleared just as the PSB threshold is reached, e.g., due to TraceEn being cleared, the PSB+ may not be generated. On processors that support PSB preservation (CPUID.(EAX=14H, ECX=0):EBX[bit 6] = 1), setting IA32_RTIT_CTL.InjectPsbPmiOnEnable[56] = 1 will ensure that a PSB+ that is pending at the time PT is disabled will be recorded by setting IA32_RTIT_STATUS.PendPSB[6] = 1. A PSB will be inserted, and PendPSB cleared, when PT is later re-enabled while PendPSB = 1.

Note that an overflow can occur during PSB+, and this could cause the PSBEND packet to be lost. For this reason, the OVF packet should also be viewed as terminating PSB+. If IA32_RTIT_STATUS.TriggerEn is cleared just as the PSB threshold is reached, the PSB+ may not be generated. TriggerEn can be cleared by a WRMSR that clears IA32_RTIT_CTL.TraceEn, a VM exit that clears IA32_RTIT_CTL.TraceEn, an #SMI, or any time that either IA32_RTIT_STATUS.Stopped is set (e.g., by a TraceStop or ToPA stop condition) or IA32_RTIT_STATUS.Error is set (e.g., by an Intel PT output error). On processors that support PSB preservation (CPUID.(EAX=14H, ECX=0):EBX[bit 6] = 1), setting IA32_RTIT_CTL.InjectPsbPmiOnEnable[56] = 1 will ensure that a PSB+ that is pending at the time PT is disabled will be recorded by setting IA32_RTIT_STATUS.PendPSB[6] = 1. A PSB will then be pended when the saved PT context is later restored.

33.3.8 Internal Buffer Overflow

In the rare circumstances when new packets need to be generated but the processor's dedicated internal buffers are all full, an "internal buffer overflow" occurs. On such an overflow packet generation ceases (as packets would need to enter the processor's internal buffer) until the overflow resolves. Once resolved, packet generation resumes.

When the buffer overflow is cleared, an OVF packet (Section 33.4.2.16) is generated, and the processor ensures that packets which follow the OVF are not compressed (IP compression or RET compression) against packets that were lost.

If IA32_RTIT_CTL.BranchEn = 1, the OVF packet will be followed by a FUP if the overflow resolves while PacketEn=1. If the overflow resolves while PacketEn = 0 no packet is generated, but a TIP.PGE will naturally be generated later, once PacketEn = 1. The payload of the FUP or TIP.PGE will be the Current IP of the first instruction upon which tracing resumes after the overflow is cleared. If the overflow resolves while PacketEn=1, only timing packets may come between the OVF and the FUP. If the overflow resolves while PacketEn=0, any other packets that are not dependent on PacketEn may come between the OVF and the TIP.PGE.

33.3.8.1 Overflow Impact on Enables

The address comparisons to ADDRn ranges, for IP filtering and TraceStop (Section 33.2.5.3), continue during a buffer overflow, and TriggerEn, ContextEn, and FilterEn may change during a buffer overflow. Like other packets, however, any TIP.PGE or TIP.PGD packets that would have been generated will be lost. Further, IA32_RTIT_STATUS.PacketByteCnt will not increment, since it is only incremented when packets are generated.

If a TraceStop event occurs during the buffer overflow, IA32_RTIT_STATUS.Stopped will still be set, tracing will cease as a result. However, the TraceStop packet, and any TIP.PGD that result from the TraceStop, may be dropped.

33.3.8.2 Overflow Impact on Timing Packets

Any timing packets that are generated during a buffer overflow will be dropped. If only a few MTC packets are dropped, a decoder should be able to detect this by noticing that the time value in the first MTC packet after the buffer overflow incremented by more than one. If the buffer overflow lasted long enough that 256 MTC packets are lost (and thus the MTC packet 'wraps' its 8-bit CTC value), then the decoder may be unable to properly understand the trace. This is not an expected scenario. No CYC packets are generated during overflow, even if the cycle counter wraps.

Note that, if cycle-accurate mode is enabled, the OVF packet will generate a CYC packet. Because the cycle counter counts during overflows, this CYC packet can provide the duration of the overflow. However, there is a risk that the cycle counter wrapped during the overflow, which could render this CYC misleading.

33.3.9 TNT Disable

Software can opt to omit TNT packets from control flow trace (BranchEn=1) by setting IA32_RTIT_CTL.DisTNT[bit 55]. This can dramatically reduce trace size. Results will vary by workload, but trace size reductions of 40-75% are typical, which will have a corresponding reduction in performance overhead and memory bandwidth consumption from Intel PT. However, omitting TNT packets means the decoder is not able to follow the full control flow trace, since conditional branch and compressed RET results won't be known. Thus, TNT Disable should be employed only for usages that do not depend on full control flow trace.

NOTE

To avoid loss of RET results with TNT Disable, software may wish to disable RET compression by setting IA32_RTIT_CTL.DisRETC[bit 11].

33.3.10 Operational Errors

Errors are detected as a result of packet output configuration problems, which can include output alignment issues, ToPA reserved bit violations, or overlapping packet output with restricted memory. See "ToPA Errors" in Section 33.2.7.2 for details on ToPA errors, and Section 33.2.7.4 for details on restricted memory errors. Operational errors are only detected and signaled when TraceEn=1.

When an operational error is detected, tracing is disabled and the error is logged. Specifically, IA32_RTIT_STATUS.Error is set, which will cause IA32_RTIT_STATUS.TriggerEn to be 0. This will disable generation of all packets. Some causes of operational errors may lead to packet bytes being dropped.

It should be noted that the timing of error detection may not be predictable. Errors are signaled when the processor encounters the problematic configuration. This could be as soon as packet generation is enabled but could also be later when the problematic entry or field needs to be used.

Once an error is signaled, software should disable packet generation by clearing TraceEn, diagnose and fix the error condition, and clear IA32_RTIT_STATUS.Error. At this point, packet generation can be re-enabled.

33.4 TRACE PACKETS AND DATA TYPES

This section details the data packets generated by Intel Processor Trace. It is useful for developers writing the interpretation code that will decode the data packets and apply it to the traced source code.

33.4.1 Packet Relationships and Ordering

This section introduces the concept of packet "binding", which involves determining the IP in a binary disassembly at which the change indicated by a given packet applies. Some packets have the associated IP as the payload (FUP, TIP), while for others the decoder need only search for the next instance of a particular instruction (or instructions) to bind the packet (TNT). However, in many cases, the decoder will need to consider the relationship between packets, and to use this packet context to determine how to bind the packet.

Section 33.4.1.1 below provides detailed descriptions of the packets, including how packets bind to IPs in the disassembly, to other packets, or to nothing at all. Many packets listed are simple to bind, because they are generated in only a few scenarios. Those that require more consideration are typically part of "compound packet events", such as interrupts, exceptions, and some instructions, where multiple packets are generated by a single operation (instruction or event). These compound packet events frequently begin with a FUP to indicate the source address (if it is not clear from the disassembly), and are concluded by a TIP or TIP.PGD packet that indicates the destination address (if one is provided). In this scenario, the FUP is said to be "coupled" with the TIP packet.

Other packets could be in between the coupled FUP and TIP packet. Timing packets, such as TSC, MTC, CYC, or CBR, could arrive at any time, and hence could intercede in a compound packet event. If an operation changes CR3 or the processor's mode of execution, a state update packet (i.e., PIP or MODE) is generated. The state changes indicated by these intermediate packets should be applied at the IP of the TIP* packet. A summary of compound packet events is provided in Table 33-14; see Section 33.4.1.1 for more per-packet details and Section 33.7 for more detailed packet generation examples.

Table 33-14. Compound Packet Event Summary

Event Type	Beginning	Middle	End	Comment
Unconditional, uncompressed control-flow transfer	FUP or none	Any combination of PIP, VMCS, MODE.Exec, or none	TIP or TIP.PGD	FUP only for asynchronous events. Order of middle packets may vary. PIP/VMCS/MODE only if the operation modifies the state tracked by these respective packets.
TSX Update	MODE.TSX, and (FUP or none)	None	TIP, TIP.PGD, or none	FUP TIP/TIP.PGD only for TSX abort cases.
Overflow	OVF	PSB, PSBEND, or none	FUP or TIP.PGE	FUP if overflow resolves while ContextEn=1, else TIP.PGE.

33.4.1.1 Packet Blocks

Packet blocks are a means to dump one or more groups of state values. Packet blocks begin with a Block Begin Packet (BBP), which indicates what type of state is held within the block. Following each BBP there may be one or more Block Item Packets (BIPs), which contain the state values. The block is terminated by either a Block End Packet (BEP) or another BBP indicating the start of a new block.

The BIP packet includes an ID value that, when combined with the Type field from the BBP that preceded it, uniquely identifies the state value held in the BIP payload. The size of each BIP packet payload is provided by the Size field in the preceding BBP packet.

Each block type can have up to 32 items defined for it. There is no guarantee, however, that each block of that type will hold all 32 items. For more details on which items to expect, see documentation on the specific block type of interest.

See the BBP packet description (Section 33.4.2.26) for details on packet block generation scenarios.

Packet blocks are entirely generated within an instruction or between instructions, which dictates the types of packets (aside from BIPs) that may be seen within a packet block. Packets that indicate control flow changes, or other indication of instruction completion, cannot be generated within a block. These are listed in the following table. Other packets, including timing packets, may occur between BBP and BEP.

Table 33-15. Packets Forbidden Between BBP and BEP

TNT
TIP, TIP.PGE, TIP.PGD
MODE.Exec, MODE.TSX
PIP, VMCS
TraceStop
PSB, PSBEND
PTW
MWAIT

It is possible to encounter an internal buffer overflow in the middle of a block. In such a case, it is guaranteed that packet generation will not resume in the middle of a block, and hence the OVF packet terminates the current block. Depending on the duration of the overflow, subsequent blocks may also be lost.

Decoder Implications

When a Block Begin Packet (BBP) is encountered, the decoder will need to decode some packets within the block differently from those outside a block. The Block Item Packet (BIP) header byte has the same encoding as a TNT packet outside of a block, but must be treated as a BIP header (with following payload) within one.

When an OVF packet is encountered, the decoder should treat that as a block ending condition. Packet generation will not resume within a block.

33.4.2 Packet Definitions

The following description of packet definitions are in tabular format. Figure 33-3 explains how to interpret them. Packet bits listed as "RSVD" are not guaranteed to be 0.

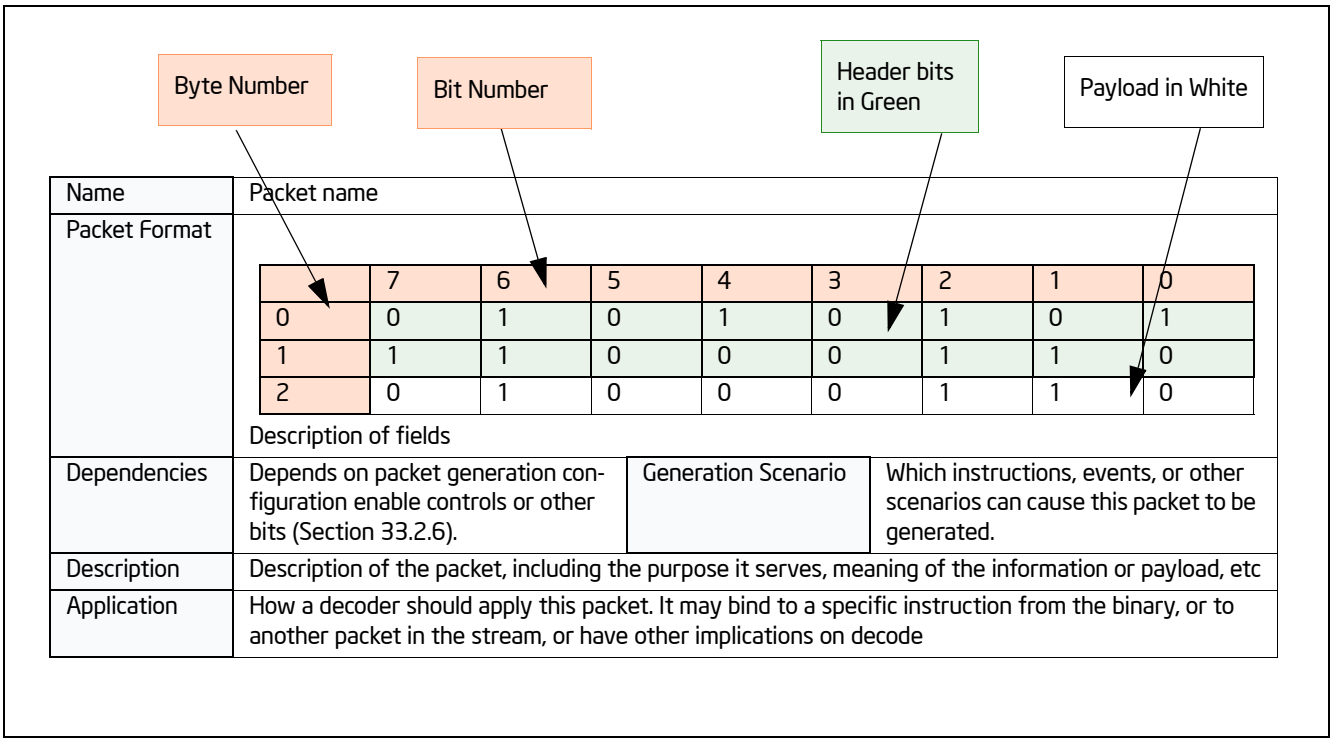

Figure 33-3. Interpreting Tabular Definition of Packet Format

33.4.2.1 Taken/Not-taken (TNT) Packet

Table 33-16. TNT Packet Definition

<table>
<tr><td>Name</td><td colspan="3">Taken/Not-taken (TNT) Packet</td></tr>
<tr><td>Packet Format</td><td colspan="3">
<table>
<tr><td></td><td>7</td><td>6</td><td>5</td><td>4</td><td>3</td><td>2</td><td>1</td><td>0</td><td></td></tr>
<tr><td>0</td><td>1</td><td>B_1</td><td>B_2</td><td>B_3</td><td>B_4</td><td>B_5</td><td>B_6</td><td>0</td><td>Short TNT</td></tr>
</table>
</td></tr>
<tr><td></td><td colspan="3">B1...BN represent the last N conditional branch or compressed RET (Section 33.4.2.2) results, such that B1 is oldest and BN is youngest. The short TNT packet can contain from 1 to 6 TNT bits. The long TNT packet can contain from 1 to 47 TNT bits.</td></tr>
<tr><td></td><td colspan="3">
<table>
<tr><td></td><td>7</td><td>6</td><td>5</td><td>4</td><td>3</td><td>2</td><td>1</td><td>0</td><td></td></tr>
<tr><td>0</td><td>0</td><td>0</td><td>0</td><td>0</td><td>0</td><td>0</td><td>1</td><td>0</td><td rowspan="8">Long TNT</td></tr>
<tr><td>1</td><td>1</td><td>0</td><td>1</td><td>0</td><td>0</td><td>0</td><td>1</td><td>1</td></tr>
<tr><td>2</td><td>B_{40}</td><td>B_{41}</td><td>B_{42}</td><td>B_{43}</td><td>B_{44}</td><td>B_{45}</td><td>B_{46}</td><td>B_{47}</td></tr>
<tr><td>3</td><td>B_{32}</td><td>B_{33}</td><td>B_{34}</td><td>B_{35}</td><td>B_{36}</td><td>B_{37}</td><td>B_{38}</td><td>B_{39}</td></tr>
<tr><td>4</td><td>B_{24}</td><td>B_{25}</td><td>B_{26}</td><td>B_{27}</td><td>B_{28}</td><td>B_{29}</td><td>B_{30}</td><td>B_{31}</td></tr>
<tr><td>5</td><td>B_{16}</td><td>B_{17}</td><td>B_{18}</td><td>B_{19}</td><td>B_{20}</td><td>B_{21}</td><td>B_{22}</td><td>B_{23}</td></tr>
<tr><td>6</td><td>B_8</td><td>B_9</td><td>B_{10}</td><td>B_{11}</td><td>B_{12}</td><td>B_{13}</td><td>B_{14}</td><td>B_{15}</td></tr>
<tr><td>7</td><td>1</td><td>B_1</td><td>B_2</td><td>B_3</td><td>B_4</td><td>B_5</td><td>B_6</td><td>B_7</td></tr>
</table>
</td></tr>
<tr><td></td><td colspan="3">Irrespective of how many TNT bits is in a packet, the last valid TNT bit is followed by a trailing 1, or Stop bit, as shown above. If the TNT packet is not full (fewer than 6 TNT bits for the Short TNT, or fewer than 47 TNT bits for the Long TNT), the Stop bit moves up, and the trailing bits of the packet are filled with 0s. Examples of these “partial TNTs” are shown below. An implementation may choose to use long TNTs, short TNTs, or both.
<table>
<tr><td></td><td>7</td><td>6</td><td>5</td><td>4</td><td>3</td><td>2</td><td>1</td><td>0</td><td></td></tr>
<tr><td>0</td><td>0</td><td>0</td><td>1</td><td>B_1</td><td>B_2</td><td>B_3</td><td>B_4</td><td>0</td><td>Short TNT</td></tr>
</table>
</td></tr>
<tr><td></td><td colspan="3">
<table>
<tr><td></td><td>7</td><td>6</td><td>5</td><td>4</td><td>3</td><td>2</td><td>1</td><td>0</td><td></td></tr>
<tr><td>0</td><td>0</td><td>0</td><td>0</td><td>0</td><td>0</td><td>0</td><td>1</td><td>0</td><td>Long TNT</td></tr>
<tr><td>1</td><td>1</td><td>0</td><td>1</td><td>0</td><td>0</td><td>0</td><td>1</td><td>1</td><td></td></tr>
<tr><td>2</td><td>B_{24}</td><td>B_{25}</td><td>B_{26}</td><td>B_{27}</td><td>B_{28}</td><td>B_{29}</td><td>B_{30}</td><td>B_{31}</td><td></td></tr>
<tr><td>3</td><td>B_{16}</td><td>B_{17}</td><td>B_{18}</td><td>B_{19}</td><td>B_{20}</td><td>B_{21}</td><td>B_{22}</td><td>B_{23}</td><td></td></tr>
<tr><td>4</td><td>B_8</td><td>B_9</td><td>B_{10}</td><td>B_{11}</td><td>B_{12}</td><td>B_{13}</td><td>B_{14}</td><td>B_{15}</td><td></td></tr>
<tr><td>5</td><td>1</td><td>B_1</td><td>B_2</td><td>B_3</td><td>B_4</td><td>B_5</td><td>B_6</td><td>B_7</td><td></td></tr>
<tr><td>6</td><td>0</td><td>0</td><td>0</td><td>0</td><td>0</td><td>0</td><td>0</td><td>0</td><td></td></tr>
<tr><td>7</td><td>0</td><td>0</td><td>0</td><td>0</td><td>0</td><td>0</td><td>0</td><td>0</td><td></td></tr>
</table>
</td></tr>
<tr><td>Dependencies</td><td>PacketEn &&
~IA32_RTIT_CTL.DisTNT</td><td>Generation Scenario</td><td>On a conditional branch or compressed RET, if it fills the TNT. Also, partial TNTs may be generated at any time, as a result of other packets being generated, or certain micro-architectural conditions occurring, before the TNT is full.</td></tr>
</table>

Table 33-16. TNT Packet Definition (Contd.)

Description	Provides the taken/not-taken results for the last 1..6 (Short TNT) or 1..47 (Long TNT) conditional branches (Jcc, J*CXZ, or LOOP) or compressed RETs (Section 33.4.2.2). The TNT payload bits should be interpreted as follows: ▪ 1 indicates a taken conditional branch, or a compressed RET ▪ 0 indicates a not-taken conditional branch TNT payload bits are stored internal to the processor in a TNT buffer, until either the buffer is filled or another packet is to be generated. In either case a TNT packet holding the buffered bits will be emitted, and the TNT buffer will be marked as empty.
Application	Each valid payload bit (that is, bits between the header bits and the trailing Stop bit) applies to an upcoming conditional branch or RET instruction. Once a decoder consumes a TNT packet with N valid payload bits, these bits should be applied to (and hence provide the destination for) the next N conditional branches or RETs.

33.4.2.2 Target IP (TIP) Packet

Table 33-17. IP Packet Definition

Name	Target IP (TIP) Packet		
Packet Format	<table><tr><th></th><th>7</th><th>6</th><th>5</th><th>4</th><th>3</th><th>2</th><th>1</th><th>0</th></tr><tr><td>0</td><td colspan="4">IPBytes</td><td>0</td><td>1</td><td>1</td><td>0</td><td>1</td></tr><tr><td>1</td><td colspan="8">TargetIP[7:0]</td></tr><tr><td>2</td><td colspan="8">TargetIP[15:8]</td></tr><tr><td>3</td><td colspan="8">TargetIP[23:16]</td></tr><tr><td>4</td><td colspan="8">TargetIP[31:24]</td></tr><tr><td>5</td><td colspan="8">TargetIP[39:32]</td></tr><tr><td>6</td><td colspan="8">TargetIP[47:40]</td></tr><tr><td>7</td><td colspan="8">TargetIP[55:48]</td></tr><tr><td>8</td><td colspan="8">TargetIP[63:56]</td></tr></table>		
Dependencies	PacketEn	Generation Scenario	Indirect branch (including un-compressed RET), far branch, interrupt, exception, INIT, SIPI, VM exit, VM entry, TSX abort, EENTER, EEXIT, ERESUME, AEX[1].
Description	Provides the target for some control flow transfers		
Application	Anytime a TIP is encountered, it indicates that control was transferred to the IP provided in the payload.		
	The source of this control flow change, and hence the IP or instruction to which it binds, depends on the packets that precede the TIP. If a TIP is encountered and all preceding packets have already been bound, then the TIP will apply to the upcoming indirect branch, far branch, or VMRESUME. However, if there was a preceding FUP that remains unbound, it will bind to the TIP. Here, the TIP provides the target of an asynchronous event or TSX abort that occurred at the IP given in the FUP payload. Note that there may be other packets, in addition to the FUP, which will bind to the TIP packet. See the packet application descriptions for other packets for details.		

NOTES:

1. EENTER, EEXIT, ERESUME, AEX would be possible only for a debug enclave.

IP Compression

The IP payload in a TIP. FUP, TIP.PGE, or TIP.PGD packet can vary in size, based on the mode of execution, and the use of IP compression. IP compression is an optional compression technique the processor may choose to employ to reduce bandwidth. With IP compression, the IP to be represented in the payload is compared with the last IP sent out, via any of FUP, TIP, TIP.PGE, or TIP.PGD. If that previous IP had the same upper (most significant) address bytes, those matching bytes may be suppressed in the current packet. The processor maintains an internal state of the "Last IP" that was encoded in trace packets, thus the decoder will need to keep track of the "Last IP" state in

software, to match fidelity with packets generated by hardware. "Last IP" is initialized to zero, hence if the first IP in the trace may be compressed if the upper bytes are zeroes.

The "IPBytes" field of the IP packets (FUP, TIP, TIP.PGE, TIP.PGD) serves to indicate how many bytes of payload are provided, and how the decoder should fill in any suppressed bytes. The algorithm for reconstructing the IP for a TIP/FUP packet is shown in the table below.

Table 33-18. FUP/TIP IP Reconstruction

IPBytes	Uncompressed IP Value							
	63:56	55:48	47:40	39:32	31:24	23:16	15:8	7:0
000b	None, IP is out of context							
001b	Last IP[63:16]						IP Payload[15:0]	
010b	Last IP[63:32]				IP Payload[31:0]			
011b	IP Payload[47] extended		IP Payload[47:0]					
100b	Last IP [63:48]		IP Payload[47:0]					
101b	Reserved							
110b	IP Payload[63:0]							
111b	Reserved							

The processor-internal Last IP state is guaranteed to be reset to zero when a PSB is sent out. This means that the IP that follows the PSB with either be un-compressed (011b or 110b, see Table 33-18), or compressed against zero.

At times, "IPbytes" will have a value of 0. As shown above, this does not mean that the IP payload matches the full address of the last IP, but rather that the IP for this packet was suppressed. This is used for cases where the IP that applies to the packet is out of context. An example is the TIP.PGD sent on a SYSCALL, when tracing only USR code. In that case, no TargetIP will be included in the packet, since that would expose an instruction point at CPL = 0. When the IP payload is suppressed in this manner, Last IP is not cleared, and instead refers to the last IP packet with a non-zero IPBytes field.

On processors that support a maximum linear address size of 32 bits, IP payloads may never exceed 32 bits (IPBytes <= 010b).

Indirect Transfer Compression for Returns (RET)

In addition to IP compression, TIP packets for near return (RET) instructions can also be compressed. If the RET target matches the next IP of the corresponding CALL, then the TIP packet is unneeded, since the decoder can deduce the target IP by maintaining a CALL/RET stack of its own.

When a RET is compressed, a Taken indication is added to the TNT buffer. Because the RET generates no TIP packet, it also does not update the internal Last IP value, and thus the decoder should treat it the same way. If the RET is not compressed, it will generate a TIP packet (just like when RET compression is disabled, via IA32_RTIT_CTL.DisRETC).

A CALL/RET stack can be maintained by the decoder by doing the following:

1. Allocate space to store 64 RET targets.
2. For near CALLs, push the Next IP onto the stack. Once the stack is full, new CALLs will force the oldest entry off the end of the stack, such that only the youngest 64 entries are stored. Note that this excludes zero-length CALLs, which are direct near CALLs with displacement zero (to the next IP). These CALLs typically don't have matching RETs.
3. For near RETs, pop the top (youngest) entry off the stack. This will be the expected target of the RET.

In cases where a RET is compressed, the RET target is guaranteed to match the expected target from 3) above. If the target is not compressed, a TIP packet will be generated with the RET target, which may differ from the expected target in some cases.

The hardware ensures that packets read by the decoder will always have seen the CALL that corresponds to any compressed RET. The processor will never compress a RET across a PSB, a buffer overflow, or scenario where PacketEn=0. This means that a RET whose corresponding CALL executed while PacketEn=0, or before the last PSB, etc., will not be compressed.

If the CALL/RET stack is manipulated or corrupted by software, and thereby causes a RET to transfer control to a target that is inconsistent with the CALL/RET stack, then the RET will not be compressed, and will produce a TIP packet. This can happen, for example, if software executes a PUSH instruction to push a target onto the stack, and a later RET uses this target.

For processors that employ deferred TIPs (Section 33.4.2.3), an uncompressed RET will not be deferred, and hence will force out any accumulated TNTs or TIPs. This serves to avoid ambiguity, and make clear to the decoder whether the near RET was compressed, and hence a bit in the in-progress TNT should be consumed, or uncompressed, in which case there will be no in-progress TNT and thus a TIP should be consumed.

Note that in the unlikely case that a RET executes in a different execution mode than the associated CALL, the decoder will need to model the same behavior with its CALL stack. For instance, if a CALL executes in 64-bit mode, a 64-bit IP value will be pushed onto the software stack. If the corresponding RET executes in 32-bit mode, then only the lower 32 target bits will be popped off of the stack, which may mean that the RET does not go to the CALL's Next IP. This is architecturally correct behavior, and this RET could be compressed, thus the decoder should match this behavior.

33.4.2.3 Deferred TIPs

The processor may opt to defer sending out the TNT when TIPs are generated. Thus, rather than sending a partial TNT followed by a TIP, both packets will be deferred while the TNT accumulates more Jcc/RET results. Any number of TIP packets may be accumulated this way, such that only once the TNT is filled, or once another packet (e.g., FUP) is generated, the TNT will be sent, followed by all the deferred TIP packets, and finally terminated by the other packet(s) that forced out the TNT and TIP packets. Generation of many other packets (see list below) will force out the TNT and any accumulated TIP packets. This is an optional optimization in hardware to reduce the bandwidth consumption, and hence the performance impact, incurred by tracing.

Table 33-19. TNT Examples with Deferred TIPs

Code Flow	Packets, Non-Deferred TIPS	Packets, Deferred TIPS
0x1000 cmp %rcx, 0 0x1004 jnz Foo // not-taken 0x1008 jmp %rdx	TNT(0b0), TIP(0x1308)	
0x1308 cmp %rcx, 1 0x130c jnz Bar // not-taken 0x1310 cmp %rcx, 2 0x1314 jnz Baz // taken 0x1500 cmp %eax, 7 0x1504 jg Exit // not-taken 0x1508 jmp %r15	TNT(0b010), TIP(0x1100)	
0x1100 cmp %rbx, 1 0x1104 jg Start // not-taken 0x1108 add %rcx, %eax 0x110c ... // **an asynchronous Interrupt arrives** INThandler: 0xcc00 pop %rdx	TNT(0b0), FUP(0x110c), TIP(0xcc00)	TNT(0b00100), TIP(0x1308), TIP(0x1100), FUP(0x110c), TIP(0xcc00)

33.4.2.4 Packet Generation Enable (TIP.PGE) Packet

Table 33-20. TIP.PGE Packet Definition

<table>
<tr><td>Name</td><td colspan="4">Target IP - Packet Generation Enable (TIP.PGE) Packet</td></tr>
<tr><td>Packet Format</td><td colspan="4">
<table>
<tr><th></th><th>7</th><th>6</th><th>5</th><th>4</th><th>3</th><th>2</th><th>1</th><th>0</th></tr>
<tr><td>0</td><td colspan="3">IPBytes</td><td>1</td><td>0</td><td>0</td><td>0</td><td>1</td></tr>
<tr><td>1</td><td colspan="8">TargetIP[7:0]</td></tr>
<tr><td>2</td><td colspan="8">TargetIP[15:8]</td></tr>
<tr><td>3</td><td colspan="8">TargetIP[23:16]</td></tr>
<tr><td>4</td><td colspan="8">TargetIP[31:24]</td></tr>
<tr><td>5</td><td colspan="8">TargetIP[39:32]</td></tr>
<tr><td>6</td><td colspan="8">TargetIP[47:40]</td></tr>
<tr><td>7</td><td colspan="8">TargetIP[55:48]</td></tr>
<tr><td>8</td><td colspan="8">TargetIP[63:56]</td></tr>
</table>
</td></tr>
<tr><td>Dependencies</td><td>PacketEn transitions to 1</td><td>Generation Scenario</td><td colspan="2">Any branch instruction, control flow transfer, or MOV CR3 that sets PacketEn, a WRMSR that enables packet generation and sets PacketEn</td></tr>
<tr><td>Description</td><td colspan="4">Indicates that PacketEn has transitioned to 1. It provides the IP at which the tracing begins.
This can occur due to any of the enables that comprise PacketEn transitioning from 0 to 1, as long as all the others are asserted. Examples:
▪ TriggerEn: This is set on software write to set IA32_RTIT_CTL.TraceEn as long as the Stopped and Error bits in IA32_RTIT_STATUS are clear. The IP payload will be the Next IP of the WRMSR.
▪ FilterEn: This is set when software jumps into the tracing region. This region is defined by enabling IP filtering in IA32_RTIT_CTL.ADDRn_CFG, and defining the range in IA32_RTIT_ADDRn_[AB], see. Section 33.2.5.3. The IP payload will be the target of the branch.
▪ ContextEn: This is set on a CPL change, a CR3 write or any other means of changing ContextEn. The IP payload will be the Next IP of the instruction that changes context if it is not a branch, otherwise it will be the target of the branch.</td></tr>
<tr><td>Application</td><td colspan="4">TIP.PGE packets bind to the instruction at the IP given in the payload.</td></tr>
</table>

33.4.2.5 Packet Generation Disable (TIP.PGD) Packet

Table 33-21. TIP.PGD Packet Definition

<table>
<tr><td>Name</td><td colspan="4">Target IP - Packet Generation Disable (TIP.PGD) Packet</td></tr>
<tr><td>Packet Format</td><td colspan="4">
<table>
<tr><th></th><th>7</th><th>6</th><th>5</th><th>4</th><th>3</th><th>2</th><th>1</th><th>0</th></tr>
<tr><td>0</td><td colspan="3">IPBytes</td><td>0</td><td>0</td><td>0</td><td>0</td><td>1</td></tr>
<tr><td>1</td><td colspan="8">TargetIP[7:0]</td></tr>
<tr><td>2</td><td colspan="8">TargetIP[15:8]</td></tr>
<tr><td>3</td><td colspan="8">TargetIP[23:16]</td></tr>
<tr><td>4</td><td colspan="8">TargetIP[31:24]</td></tr>
<tr><td>5</td><td colspan="8">TargetIP[39:32]</td></tr>
<tr><td>6</td><td colspan="8">TargetIP[47:40]</td></tr>
<tr><td>7</td><td colspan="8">TargetIP[55:48]</td></tr>
<tr><td>8</td><td colspan="8">TargetIP[63:56]</td></tr>
</table>
</td></tr>
<tr><td>Dependencies</td><td>PacketEn transitions to 0</td><td>Generation Scenario</td><td colspan="2">Any branch instruction, control flow transfer, or MOV CR3 that clears PacketEn, a WRMSR that disables packet generation and clears PacketEn</td></tr>
<tr><td>Description</td><td colspan="4">Indicates that PacketEn has transitioned to 0. It will include the IP at which the tracing ends, unless ContextEn= 0 or TraceEn=0 at the conclusion of the instruction or event that cleared PacketEn.
PacketEn can be cleared due to any of the enables that comprise PacketEn transitioning from 1 to 0. Examples:
▪ TriggerEn: This is cleared on software write to clear IA32_RTIT_CTL.TraceEn, or when IA32_RTIT_STATUS.Stopped is set, or on operational error. The IP payload will be suppressed in this case, and the “IPBytes” field will have the value 0.
▪ FilterEn: This is cleared when software jumps out of the tracing region. This region is defined by enabling IP filtering in IA32_RTIT_CTL.ADDRn_CFG, and defining the range in IA32_RTIT_ADDRn_[AB], see. Section 33.2.5.3. The IP payload will depend on the type of the branch. For conditional branches, the payload is suppressed (IPBytes = 0), and in this case the destination can be inferred from the disassembly. For any other type of branch, the IP payload will be the target of the branch.
▪ ContextEn: This can happen on a CPL change, a CR3 write or any other means of changing ContextEn. See Section 33.2.5.3 for details. In this case, when ContextEn is cleared, there will be no IP payload. The “IPBytes” field will have value 0.
Note that, in cases where a branch that would normally produce a TIP packet (i.e., far transfer, indirect branch, interrupt, etc) or TNT update (conditional branch or compressed RT) causes PacketEn to transition from 1 to 0, the TIP or TNT bit will be replaced with TIP.PGD. The payload of the TIP.PGD will be the target of the branch, unless the result of the instruction causes TraceEn or ContextEn to be cleared (ie, SYSCALL when IA32_RTIT_CTL.OS=0, In the case where a conditional branch clears FilterEn and hence PacketEn, there will be no TNT bit for this branch, replaced instead by the TIP.PGD.</td></tr>
<tr><td>Application</td><td colspan="4">TIP.PGD can be produced by any branch instructions, as well as some non-branch instructions, that clear PacketEn. When produced by a branch, it replaces any TIP or TNT update that the branch would normally produce.
In cases where there is an unbound FUP preceding the TIP.PGD, then the TIP.PGD is part of compound operation (i.e., asynchronous event or TSX abort) which cleared PacketEn. For most such cases, the TIP.PGD is simply replacing a TIP, and should be treated the same way. The TIP.PGD may or may not have an IP payload, depending on whether the operation cleared ContextEn.
If there is not an associated FUP, the binding will depend on whether there is an IP payload. If there is an IP payload, then the TIP.PGD should be applied to either the next direct branch whose target matches the TIP.PGD payload, or the next branch that would normally generate a TIP or TNT packet. If there is no IP payload, then the TIP.PGD should apply to the next branch or MOV CR3 instruction.</td></tr>
</table>

33.4.2.6 Flow Update (FUP) Packet

Table 33-22. FUP Packet Definition

<table>
<tr><td>Name</td><td colspan="4">Flow Update (FUP) Packet</td></tr>
<tr><td>Packet Format</td><td colspan="4">
<table>
<tr><th></th><th>7</th><th>6</th><th>5</th><th>4</th><th>3</th><th>2</th><th>1</th><th>0</th></tr>
<tr><td>0</td><td colspan="3">IPBytes</td><td>1</td><td>1</td><td>1</td><td>0</td><td>1</td></tr>
<tr><td>1</td><td colspan="8">IP[7:0]</td></tr>
<tr><td>2</td><td colspan="8">IP[15:8]</td></tr>
<tr><td>3</td><td colspan="8">IP[23:16]</td></tr>
<tr><td>4</td><td colspan="8">IP[31:24]</td></tr>
<tr><td>5</td><td colspan="8">IP[39:32]</td></tr>
<tr><td>6</td><td colspan="8">IP[47:40]</td></tr>
<tr><td>7</td><td colspan="8">IP[55:48]</td></tr>
<tr><td>8</td><td colspan="8">IP[63:56]</td></tr>
</table>
</td></tr>
<tr><td>Dependencies</td><td>TriggerEn && ContextEn. (Typically depends on BranchEn and FilterEn as well, see Section 33.2.5, Section 33.4.2.21, and Section 33.4.2.22 for details.)</td><td>Generation Scenario</td><td colspan="2">Asynchronous Events (interrupts, exceptions, INIT, SIPI, SMI, VM exit, #MC), PSB+, XBEGIN, XEND, XABORT, XACQUIRE, XRELEASE, EENTER, EEXIT, ERESUME, EEE, AEX,[1], INTO, INT1, INT3, INT n, a WRMSR that disables packet generation.</td></tr>
<tr><td>Description</td><td colspan="4">Provides the source address for asynchronous events, and some other instructions. Is never sent alone, always sent with an associated TIP or MODE packet, and potentially others.</td></tr>
<tr><td>Application</td><td colspan="4">FUP packets provide the IP to which they bind. However, they are never standalone, but are coupled with other packets.
In TSX cases, the FUP is immediately preceded by a MODE.TSX, which binds to the same IP. A TIP will follow only in the case of TSX aborts, see Section 33.4.2.8 for details.
Otherwise, FUPs are part of compound packet events (see Section 33.4.1). In these compound cases, the FUP provides the source IP for an instruction or event, while a following TIP (or TIP.PGD) packet will provide the destination IP. Other packets may be included in the compound event between the FUP and TIP.</td></tr>
</table>

NOTES:

1. EENTER, EEXIT, ERESUME, EEE, AEX apply only if Intel Software Guard Extensions is supported.

FUP IP Payload

Flow Update Packet gives the source address of an instruction when it is needed. In general, branch instructions do not need a FUP, because the source address is clear from the disassembly. For asynchronous events, however, the source address cannot be inferred from the source, and hence a FUP will be sent. Table 33-23 illustrates cases where FUPs are sent, and which IP can be expected in those cases.

Table 33-23. FUP Cases and IP Payload

Event	Flow Update IP	Comment
External Interrupt, NMI/SMI, Traps, Machine Check (trap-like), INIT/SIPI	Address of next instruction (Next IP) that would have been executed	Functionally, this matches the LBR FROM field value and also the EIP value which is saved onto the stack.
Exceptions/Faults, Machine check (fault-like)	Address of the instruction which took the exception/fault (Current IP)	This matches the similar functionality of LBR FROM field value and also the EIP value which is saved onto the stack.
Software Interrupt	Address of the software interrupt instruction (Current IP)	This matches the similar functionality of LBR FROM field value, but does not match the EIP value which is saved onto the stack (Next Linear Instruction Pointer - NLIP).
EENTER, EEXIT, ERESUME, Enclave Exiting Event (EEE), AEX[1]	Current IP of the instruction	This matches the LBR FROM field value and also the EIP value which is saved onto the stack.
XACQUIRE	Address of the X* instruction	
XRELEASE, XBEGIN, XEND, XABORT, other transactional abort	Current IP	
#SMI	IP that is saved into SMRAM	
WRMSR that clears TraceEn, PSB+	Current IP	

NOTES:

1. Information on EENTER, EEXIT, ERESUME, EEE, Asynchronous Enclave eXit (AEX) can be found in the *Intel® 64 and IA-32 Architectures Software Developer's Manual, Volume 3D*.

On a canonical fault due to sequentially fetching an instruction in non-canonical space (as opposed to jumping to non-canonical space), the IP of the fault (and thus the payload of the FUP) will be a non-canonical address. This is consistent with what is pushed on the stack for such faulting cases.

If there are post-commit task switch faults, the IP value of the FUP will be the original IP when the task switch started. This is the same value as would be seen in the LBR_FROM field. But it is a different value as is saved on the stack or VMCS.

33.4.2.7 Paging Information (PIP) Packet

Table 33-24. PIP Packet Definition

<table>
<tr><td>Name</td><td colspan="4">Paging Information (PIP) Packet</td></tr>
<tr><td>Packet Format</td><td colspan="4">
<table>
<tr><th></th><th>7</th><th>6</th><th>5</th><th>4</th><th>3</th><th>2</th><th>1</th><th>0</th></tr>
<tr><td>0</td><td>0</td><td>0</td><td>0</td><td>0</td><td>0</td><td>0</td><td>1</td><td>0</td></tr>
<tr><td>1</td><td>0</td><td>1</td><td>0</td><td>0</td><td>0</td><td>0</td><td>1</td><td>1</td></tr>
<tr><td>2</td><td colspan="6">CR3[11:5] or 0</td><td>RSVD/NR</td></tr>
<tr><td>3</td><td colspan="7">CR3[19:12]</td></tr>
<tr><td>4</td><td colspan="7">CR3[27:20]</td></tr>
<tr><td>5</td><td colspan="7">CR3[35:28]</td></tr>
<tr><td>6</td><td colspan="7">CR3[43:36]</td></tr>
<tr><td>7</td><td colspan="7">CR3[51:44]</td></tr>
</table>
</td></tr>
<tr><td>Dependencies</td><td>TriggerEn && ContextEn && IA32_RTIT_CTL.OS</td><td>Generation Scenario</td><td colspan="2">MOV CR3, Task switch, INIT, SIPI, PSB+, VM exit, VM entry</td></tr>
<tr><td>Description</td><td colspan="4">The CR3 payload shown includes only the address portion of the CR3 value. For PAE paging, CR3[11:5] are thus included. For other paging modes (32-bit and 4-level paging[1]), these bits are 0.
This packet holds the CR3 address value. It will be generated on operations that modify CR3:
▪ MOV CR3 operation
▪ Task Switch
▪ INIT and SIPI
▪ VM exit, if “conceal VMX from PT” VM-exit control is 0 (see Section 33.5.1)
▪ VM entry, if “conceal VMX from PT” VM-entry control is 0
PIPs are not generated, despite changes to CR3, on SMI and RSM. This is due to the special behavior on these operations, see Section 33.2.9.3 for details. Note that, for some cases of task switch where CR3 is not modified, no PIP will be produced.
The purpose of the PIP is to indicate to the decoder which application is running, so that it can apply the proper binaries to the linear addresses that are being traced.
The PIP packet contains the new CR3 value when CR3 is written.
PIPs generated by VM entries set the NR bit. PIPs generated in VMX non-root operation set the NR bit if the “conceal VMX from PT” VM-execution control is 0 (see Section 33.5.1). All other PIPs clear the NR bit.</td></tr>
<tr><td>Application</td><td colspan="4">The purpose of the PIP packet is to help the decoder uniquely identify what software is running at any given time. When a PIP is encountered, a decoder should do the following:
1) If there was a prior unbound FUP (that is, a FUP not preceded by a packet such as MODE.TSX that consumes it, and it hence pairs with a TIP that has not yet been seen), then this PIP is part of a compound packet event (Section 33.4.1). Find the ending TIP and apply the new CR3/NR values to the TIP payload IP.
2) Otherwise, look for the next MOV CR3, far branch, or VMRESUME/VMLAUNCH in the disassembly, and apply the new CR3 to the next (or target) IP.
For examples of the packets generated by these flows, see Section 33.7.</td></tr>
</table>

NOTES:

1. Earlier versions of this manual used the term “IA-32e paging” to identify 4-level paging.

33.4.2.8 MODE Packets

MODE packets keep the decoder informed of various processor modes about which it needs to know in order to properly manage the packet output, or to properly disassemble the associated binaries. MODE packets include a header and a mode byte, as shown below.

Table 33-25. General Form of MODE Packets

	7	6	5	4	3	2	1	0
0	1	0	0	1	1	0	0	1
1	Leaf ID			Mode				

The MODE Leaf ID indicates which set of mode bits are held in the lower bits.

MODE.Exec Packet

Table 33-26. MODE.Exec Packet Definition

<table>
<tr><td>Name</td><td colspan="3">MODE.Exec Packet</td></tr>
<tr><td>Packet Format</td><td colspan="3">
<table>
<tr><td></td><td>7</td><td>6</td><td>5</td><td>4</td><td>3</td><td>2</td><td>1</td><td>0</td></tr>
<tr><td>0</td><td>1</td><td>0</td><td>0</td><td>1</td><td>1</td><td>0</td><td>0</td><td>1</td></tr>
<tr><td>1</td><td>0</td><td>0</td><td>0</td><td colspan="3">Reserved</td><td>IF</td><td>CS.D</td><td>(CS.L & LMA)</td></tr>
</table>
MODE Leaf ID is ‘000.
</td></tr>
<tr><td>Dependencies</td><td>TriggerEn && ContextEn && FilterEn</td><td>Generation Scenario</td><td>Any operation that changes the CS.L, CS.D, or EFER.LMA, if IA32_RTIT_CTL.BranchEn=1.
Any operation that changes RFLAGS.IF, if IA32_RTIT_CTL.EventEn=1.
Any TIP.PGE scenario, such that any of the mode bits tracked may have changed since the last MODE.Exec.</td></tr>
<tr><td>Description</td><td colspan="3">Indicates whether software is in 16, 32, or 64-bit mode, by providing the CS.D and (CS.L & IA32_EFER.LMA) values. Essential for the decoder to properly disassemble the associated binary. Further, if CPUID.0x14.0.EBX[6]=1 (“Event Trace Support”), it indicates when interrupts are masked by providing the RFLAGS.IF value.

MODE.Exec is sent at the time of a mode change, if dependencies are met at the time, otherwise it is sent when tracing resumes. In the former case, the MODE.Exec packet is generated along with other packets that result from the operation that changes the mode, and is guaranteed to be followed by a TIP or TIP.PGE for branch operations, or a FUP for non-branch operations (CLI, STI, or POPF if EventEn=1). In cases where the mode changes while filtering dependencies are not met, the processor ensures that the decoder doesn’t lose track of the mode by sending any needed MODE.Exec once tracing resumes (preceding the TIP.PGE, if BranchEn=1). The processor may opt to suppress the MODE.Exec when tracing resumes if the mode matches that of the last MODE.Exec packet.
MODE.Exec packets are generated on CS.L, CS.D, or EFER.LMA changes only if control flow tracing is enabled (BranchEn=1). This is essential for the decoder to properly disassemble the associated binary.

<table>
<tr><td>CS.D</td><td>(CS.L & IA32_EFER.LMA)</td><td>Addressing Mode</td></tr>
<tr><td>1</td><td>1</td><td>N/A</td></tr>
<tr><td>0</td><td>1</td><td>64-bit mode</td></tr>
<tr><td>1</td><td>0</td><td>32-bit mode</td></tr>
<tr><td>0</td><td>0</td><td>16-bit mode</td></tr>
</table>

MODE.Exec packets are generated on interrupt flag (RFLAGS.IF) changes only if event tracing is enabled (EventEn=1).</td></tr>
<tr><td>Application</td><td colspan="3">MODE.Exec always precedes an IP packet (TIP, TIP.PGE, or FUP). The mode change applies to the IP address in the payload of the IP packet. When MODE.Exec is followed by a FUP, it is a stand-alone FUP and should be consumed by the MODE.Exec.</td></tr>
</table>

MODE.TSX Packet

Table 33-27. MODE.TSX Packet Definition

<table>
<tr><td>Name</td><td colspan="4">MODE.TSX Packet</td></tr>
<tr><td>Packet Format</td><td colspan="4">
<table>
<tr><td></td><td>7</td><td>6</td><td>5</td><td>4</td><td>3</td><td>2</td><td>1</td><td>0</td></tr>
<tr><td>0</td><td>1</td><td>0</td><td>0</td><td>1</td><td>1</td><td>0</td><td>0</td><td>1</td></tr>
<tr><td>1</td><td>0</td><td>0</td><td>1</td><td>0</td><td>0</td><td>0</td><td>TXAbort</td><td>InTX</td></tr>
</table>
</td></tr>
<tr><td>Dependencies</td><td>TriggerEn && ContextEn</td><td>Generation Scenario</td><td colspan="2">XBEGIN, XEND, XABORT, XACQUIRE, XRELEASE, if InTX changes, Asynchronous TSX Abort, PSB+</td></tr>
<tr><td>Description</td><td colspan="4">Indicates when a TSX transaction (either HLE or RTM) begins, commits, or aborts. Instructions executed transactionally will be “rolled back” if the transaction is aborted.
<table>
<tr><td>TXAbort</td><td>InTX</td><td>Implication</td></tr>
<tr><td>1</td><td>1</td><td>N/A</td></tr>
<tr><td>0</td><td>1</td><td>Transaction begins, or executing transactionally</td></tr>
<tr><td>1</td><td>0</td><td>Transaction aborted</td></tr>
<tr><td>0</td><td>0</td><td>Transaction committed, or not executing transactionally</td></tr>
</table>
</td></tr>
<tr><td>Application</td><td colspan="4">If PacketEn=1, MODE.TSX always immediately precedes a FUP. If the TXAbort bit is zero, then the mode change applies to the IP address in the payload of the FUP. If TXAbort=1, then the FUP will be followed by a TIP, and the mode change will apply to the IP address in the payload of the TIP.
MODE.TSX packets may be generated when PacketEn=0, due to FilterEn=0. In this case, only the last MODE.TSX generated before TIP.PGE need be applied.</td></tr>
</table>

33.4.2.9 TraceStop Packet

Table 33-28. TraceStop Packet Definition

Name	TraceStop Packet		
Packet Format	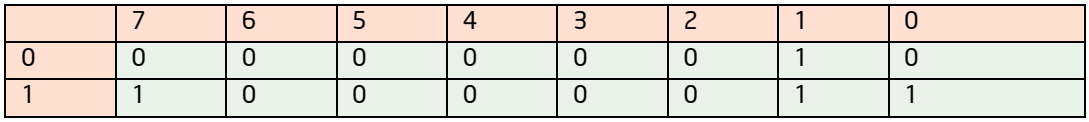		
Dependencies	TriggerEn && ContextEn	Generation Scenario	Taken branch with target in TraceStop IP region, MOV CR3 in TraceStop IP region, or WRMSR that sets TraceEn in TraceStop IP region.
Description	Indicates when software has entered a user-configured TraceStop region. When the IP matches a TraceStop range while ContextEn and TriggerEn are set, a TraceStop action occurs. This disables tracing by setting IA32_RTIT_STATUS.Stopped, thereby clearing TriggerEn, and causes a TraceStop packet to be generated. The TraceStop action also forces FilterEn to 0. Note that TraceStop may not force a flush of internally buffered packets, and thus trace packet generation should still be manually disabled by clearing IA32_RTIT_CTL.TraceEn before examining output. See Section 33.2.5.3 for more details.		
Application	If TraceStop follows a TIP.PGD (before the next TIP.PGE), then it was triggered either by the instruction that cleared PacketEn, or it was triggered by some later instruction that executed while FilterEn=0. In either case, the TraceStop can be applied at the IP of the TIP.PGD (if any). If TraceStop follows a TIP.PGE (before the next TIP.PGD), it should be applied at the last known IP.		

	7	6	5	4	3	2	1	0
0	0	0	0	0	0	0	1	0
1	1	0	0	0	0	0	1	1

33.4.2.10 Core:Bus Ratio (CBR) Packet

Table 33-29. CBR Packet Definition

Name	Core:Bus Ratio (CBR) Packet		
Packet Format	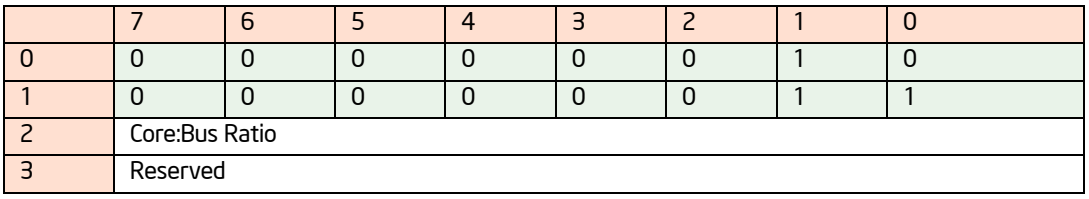		
Dependencies	TriggerEn	Generation Scenario	After any frequency change, on C-state wake up, PSB+, and after enabling trace packet generation.
Description	Indicates the core:bus ratio of the processor core. Useful for correlating wall-clock time and cycle time.		
Application	The CBR packet indicates the point in the trace when a frequency transition has occurred. On some implementations, software execution will continue during transitions to a new frequency, while on others software execution ceases during frequency transitions. There is not a precise IP provided, to which to bind the CBR packet.		

	7	6	5	4	3	2	1	0
0	0	0	0	0	0	0	1	0
1	0	0	0	0	0	0	1	1
2	Core:Bus Ratio							
3	Reserved							

33.4.2.11 Timestamp Counter (TSC) Packet

Table 33-30. TSC Packet Definition

<table>
<tr><td>Name</td><td colspan="4">Timestamp Counter (TSC) Packet</td></tr>
<tr><td>Packet Format</td><td colspan="4">
<table>
<tr><th></th><th>7</th><th>6</th><th>5</th><th>4</th><th>3</th><th>2</th><th>1</th><th>0</th></tr>
<tr><td>0</td><td>0</td><td>0</td><td>0</td><td>1</td><td>1</td><td>0</td><td>0</td><td>1</td></tr>
<tr><td>1</td><td colspan="8">SW TSC[7:0]</td></tr>
<tr><td>2</td><td colspan="8">SW TSC[15:8]</td></tr>
<tr><td>3</td><td colspan="8">SW TSC[23:16]</td></tr>
<tr><td>4</td><td colspan="8">SW TSC[31:24]</td></tr>
<tr><td>5</td><td colspan="8">SW TSC[39:32]</td></tr>
<tr><td>6</td><td colspan="8">SW TSC[47:40]</td></tr>
<tr><td>7</td><td colspan="8">SW TSC[55:48]</td></tr>
</table>
</td></tr>
<tr><td>Dependencies</td><td>IA32_RTIT_CTL.TSCEn && TriggerEn</td><td>Generation Scenario</td><td colspan="2">Sent after any event that causes the processor clocks or Intel PT timing packets (such as MTC or CYC) to stop, This may include P-state changes, wake from C-state, or clock modulation. Also on transition of TraceEn from 0 to 1.</td></tr>
<tr><td>Description</td><td colspan="4">When enabled by software, a TSC packet provides the lower 7 bytes of the current TSC value, as returned by the RDTSC instruction. This may be useful for tracking wall-clock time, and synchronizing the packets in the log with other timestamped logs.</td></tr>
<tr><td>Application</td><td colspan="4">TSC packet provides a wall-clock proxy of the event which generated it (packet generation enable, sleep state wake, etc). In all cases, TSC does not precisely indicate the time of any control flow packets; however, all preceding packets represent instructions that executed before the indicated TSC time, and all subsequent packets represent instructions that executed after it. There is not a precise IP to which to bind the TSC packet.</td></tr>
</table>

33.4.2.12 Mini Time Counter (MTC) Packet

Table 33-31. MTC Packet Definition

<table>
<tr><td>Name</td><td colspan="3">Mini time Counter (MTC) Packet</td></tr>
<tr><td>Packet Format</td><td colspan="3">
<table>
<tr><td></td><td>7</td><td>6</td><td>5</td><td>4</td><td>3</td><td>2</td><td>1</td><td>0</td></tr>
<tr><td>0</td><td>0</td><td>1</td><td>0</td><td>1</td><td>1</td><td>0</td><td>0</td><td>1</td></tr>
<tr><td>1</td><td colspan="8">CTC[N+7:N]</td></tr>
</table>
</td></tr>
<tr><td>Dependencies</td><td>IA32_RTIT_CTL.MTCEn && TriggerEn</td><td>Generation Scenario</td><td>Periodic, based on the core crystal clock, or Always Running Timer (ART).</td></tr>
<tr><td>Description</td><td colspan="3">When enabled by software, an MTC packet provides a periodic indication of wall-clock time. The 8-bit CTC (Common Timestamp Copy) payload value is set to (ART >> N) & FFH. The frequency of the ART is related to the Maximum Non-Turbo frequency, and the ratio can be determined from CPUID leaf 15H, as described in Section 33.8.3.
Software can select the threshold N, which determines the MTC frequency by setting the IA32_RTIT_CTL.MTCFreq field (see Section 33.2.8.2) to a supported value using the lookup enumerated by CPUID (see Section 33.3.1).
See Section 33.8.3 for details on how to use the MTC payload to track TSC time.
MTC provides 8 bits from the ART, starting with the bit selected by MTCFreq to dictate the frequency of the packet. Whenever that 8-bit range being watched changes, an MTC packet will be sent out with the new value of that 8-bit range. This allows the decoder to keep track of how much wall-clock time has elapsed since the last TSC packet was sent, by keeping track of how many MTC packets were sent and what their value was. The decoder can infer the truncated bits, CTC[N-1:0], are 0 at the time of the MTC packet.
There are cases in which MTC packet can be dropped, due to overflow or other micro-architectural conditions. The decoder should be able to recover from such cases by checking the 8-bit payload of the next MTC packet, to determine how many MTC packets were dropped. It is not expected that >256 consecutive MTC packets should ever be dropped.</td></tr>
<tr><td>Application</td><td colspan="3">MTC does not precisely indicate the time of any other packet, nor does it bind to any IP. However, all preceding packets represent instructions or events that executed before the indicated ART time, and all subsequent packets represent instructions that executed after, or at the same time as, the ART time.</td></tr>
</table>

33.4.2.13 TSC/MTC Alignment (TMA) Packet

Table 33-32. TMA Packet Definition

<table>
<tr><td>Name</td><td colspan="4">TSC/MTC Alignment (TMA) Packet</td></tr>
<tr><td>Packet Format</td><td colspan="4">
<table>
<tr><th></th><th>7</th><th>6</th><th>5</th><th>4</th><th>3</th><th>2</th><th>1</th><th>0</th></tr>
<tr><td>0</td><td>0</td><td>0</td><td>0</td><td>0</td><td>0</td><td>0</td><td>1</td><td>0</td></tr>
<tr><td>1</td><td>0</td><td>1</td><td>1</td><td>1</td><td>0</td><td>0</td><td>1</td><td>1</td></tr>
<tr><td>2</td><td colspan="8">CTC[7:0]</td></tr>
<tr><td>3</td><td colspan="8">CTC[15:8]</td></tr>
<tr><td>4</td><td colspan="7">Reserved</td><td>0</td></tr>
<tr><td>5</td><td colspan="8">FastCounter[7:0]</td></tr>
<tr><td>6</td><td colspan="7">Reserved</td><td>FC[8]</td></tr>
</table>
</td></tr>
<tr><td>Dependencies</td><td>IA32_RTIT_CTL.MTCEn && IA32_RTIT_CTL.TSCEn && TriggerEn</td><td>Generation Scenario</td><td colspan="2">Sent with any TSC packet.</td></tr>
<tr><td>Description</td><td colspan="4">The TMA packet serves to provide the information needed to allow the decoder to correlate MTC packets with TSC packets. With this packet, when a MTC packet is encountered, the decoder can determine how many timestamp counter ticks have passed since the last TSC or MTC packet. See Section 33.8.3.2 for details on how to make this calculation.</td></tr>
<tr><td>Application</td><td colspan="4">TMA is always sent immediately following a TSC packet, and the payload values are consistent with the TSC payload value. Thus the application of TMA matches that of TSC.</td></tr>
</table>

33.4.2.14 Cycle Count (CYC) Packet

Table 33-33. Cycle Count Packet Definition

<table>
<tr><td>Name</td><td colspan="4">Cycle Count (CYC) Packet</td></tr>
<tr><td>Packet Format</td><td colspan="4">
<table>
<tr><th></th><th>7</th><th>6</th><th>5</th><th>4</th><th>3</th><th>2</th><th>1</th><th>0</th></tr>
<tr><td>0</td><td colspan="5">Cycle Counter[4:0]</td><td>Exp</td><td>1</td><td>1</td></tr>
<tr><td>1</td><td colspan="7">Cycle Counter[11:5]</td><td>Exp</td></tr>
<tr><td>2</td><td colspan="7">Cycle Counter[18:12]</td><td>Exp</td></tr>
<tr><td>...</td><td colspan="8">... (if Exp = 1 in the previous byte)</td></tr>
</table>
</td></tr>
<tr><td>Dependencies</td><td>IA32_RTIT_CTL.CYCEn && TriggerEn</td><td>Generation Scenario</td><td colspan="2">Can be sent at any time, though a maximum of one CYC packet is sent per core clock cycle. See Section 33.3.6 for CYC-eligible packets.</td></tr>
<tr><td>Description</td><td colspan="4">The Cycle Counter field increments at the same rate as the processor core clock ticks, but with a variable length format (using a trailing EXP bit field) and a range-capped byte length.
If the CYC value is less than 32, a 1-byte CYC will be generated, with Exp=0. If the CYC value is between 32 and 4095 inclusive, a 2-byte CYC will be generated, with byte 0 Exp=1 and byte 1 Exp=0. And so on.
CYC provides the number of core clocks that have passed since the last CYC packet. CYC can be configured to be sent in every cycle in which an eligible packet is generated, or software can opt to use a threshold to limit the number of CYC packets, at the expense of some precision. These settings are configured using the IA32_RTIT_CTL.CycThresh field (see Section 33.2.8.2). For details on Cycle-Accurate Mode, IPC calculation, etc, see Section 33.3.6.
When CycThresh=0, and hence no threshold is in use, then a CYC packet will be generated in any cycle in which any CYC-eligible packet is generated. The CYC packet will precede the other packets generated in the cycle, and provides the precise cycle time of the packets that follow.
In addition to these CYC packets generated with other packets, CYC packets can be sent stand-alone. These packets serve simply to update the decoder with the number of cycles passed, and are used to ensure that a wrap of the processor's internal cycle counter doesn't cause cycle information to be lost. These stand-alone CYC packets do not indicate the cycle time of any other packet or operation, and will be followed by another CYC packet before any other CYC-eligible packet is seen.
When CycThresh>0, CYC packets are generated only after a minimum number of cycles have passed since the last CYC packet. Once this threshold has passed, the behavior above resumes, where CYC will either be sent in the next cycle that produces other CYC-eligible packets, or could be sent stand-alone.
When using CYC thresholds, only the cycle time of the operation (instruction or event) that generates the CYC packet is truly known. Other operations simply have their execution time bounded: they completed at or after the last CYC time, and before the next CYC time.</td></tr>
<tr><td>Application</td><td colspan="4">CYC provides the offset cycle time (since the last CYC packet) for the CYC-eligible packet that follows. If another CYC is encountered before the next CYC-eligible packet, the cycle values should be accumulated and applied to the next CYC-eligible packet.
If a CYC packet is generated by a TNT, note that the cycle time provided by the CYC packet applies to the first branch in the TNT packet.</td></tr>
</table>

33.4.2.15 VMCS Packet

Table 33-34. VMCS Packet Definition

<table>
<tr><td>Name</td><td colspan="4">VMCS Packet</td></tr>
<tr><td>Packet Format</td><td colspan="4">
<table>
<tr><td></td><td>7</td><td>6</td><td>5</td><td>4</td><td>3</td><td>2</td><td>1</td><td>0</td></tr>
<tr><td>0</td><td>0</td><td>0</td><td>0</td><td>0</td><td>0</td><td>0</td><td>1</td><td>0</td></tr>
<tr><td>1</td><td>1</td><td>1</td><td>0</td><td>0</td><td>1</td><td>0</td><td>0</td><td>0</td></tr>
<tr><td>2</td><td colspan="8">VMCS pointer [19:12]</td></tr>
<tr><td>3</td><td colspan="8">VMCS pointer [27:20]</td></tr>
<tr><td>4</td><td colspan="8">VMCS pointer [35:28]</td></tr>
<tr><td>5</td><td colspan="8">VMCS pointer [43:36]</td></tr>
<tr><td>6</td><td colspan="8">VMCS pointer [51:44]</td></tr>
</table>
</td></tr>
<tr><td>Dependencies</td><td>TriggerEn && ContextEn; Also in VMX operation.</td><td>Generation Scenario</td><td colspan="2">Generated on successful VMPTRLD, and optionally on PSB+, SMM VM exits, and VM entries that return from SMM (see Section 33-53).</td></tr>
<tr><td>Description</td><td colspan="4">The VMCS packet provides a VMCS pointer for a decoder to determine the transition of code contexts:
• On a successful VMPTRLD (i.e., a VMPTRLD that doesn't fault, fail, or VM exit), the VMCS packet contains the logical processor's VMCS pointer established by VMPTRLD (for subsequent execution of a VM guest context).
• An SMM VM exit loads the logical processor's VMCS pointer with the SMM-transfer VMCS pointer. If the "conceal VMX from PT" VM-exit control is 0 (see Section 33.5.1), a VMCS packet provides this pointer. See Section 33.6 on tracing inside and outside STM.
• A VM entry that returns from SMM loads the logical processor's VMCS pointer from a field in the SMM-transfer VMCS. If the "conceal VMX from PT" VM-entry control is 0, a VMCS packet provides this pointer. Whether the VM entry is to VMX root operation or VMX non-root operation is indicated by the PIP.NR bit.
A VMCS packet generated before a VMCS pointer has been loaded, or after the VMCS pointer has been cleared will set all 64 bits in the VMCS pointer field.
VMCS packets will not be seen on processors with IA32_VMX_MISC[bit 14]=0, as these processors do not allow TraceEn to be set in VMX operation.</td></tr>
<tr><td>Application</td><td colspan="4">The purpose of the VMCS packet is to help the decoder uniquely identify changes in the executing software context in situations that CR3 may not be unique.
When a VMCS packet is encountered, a decoder should do the following:
▪ If there was a prior unbound FUP (that is, a FUP not preceded by a packet such as MODE.TSX that consumes it, and it hence pairs with a TIP that has not yet been seen), then this VMCS is part of a compound packet event (Section 33.4.1). Find the ending TIP and apply the new VMCS base pointer value to the TIP payload IP.
▪ Otherwise, look for the next VMPTRLD, VMRESUME, or VMLAUNCH in the disassembly, and apply the new VMCS base pointer on the next VM entry.
For examples of the packets generated by these flows, see Section 33.7.</td></tr>
</table>

33.4.2.16 Overflow (OVF) Packet

Table 33-35. OVF Packet Definition

Name	Overflow (OVF) Packet		
Packet Format			
Dependencies	TriggerEn	Generation Scenario	On resolution of internal buffer overflow
Description	OVF simply indicates to the decoder that an internal buffer overflow occurred, and packets were likely lost. If BranchEN= 1, OVF is followed by a FUP or TIP.PGE which will provide the IP at which packet generation resumes. See Section 33.3.8.		
Application	When an OVF packet is encountered, the decoder should skip to the IP given in the subsequent FUP or TIP.PGE. The cycle counter for the CYC packet will be reset at the time the OVF packet is sent. Software should reset its call stack depth on overflow, since no RET compression is allowed across an overflow. Similarly, any IP compression that follows the OVF is guaranteed to use as a reference LastIP the IP payload of an IP packet that preceded the overflow.		

	7	6	5	4	3	2	1	0
0	0	0	0	0	0	0	1	0
1	1	1	1	1	0	0	1	1

33.4.2.17 Packet Stream Boundary (PSB) Packet

Table 33-36. PSB Packet Definition

Name	Packet Stream Boundary (PSB) Packet
Packet Format	

	7	6	5	4	3	2	1	0
0	0	0	0	0	0	0	1	0
1	1	0	0	0	0	0	1	0
2	0	0	0	0	0	0	1	0
3	1	0	0	0	0	0	1	0
4	0	0	0	0	0	0	1	0
5	1	0	0	0	0	0	1	0
6	0	0	0	0	0	0	1	0
7	1	0	0	0	0	0	1	0
8	0	0	0	0	0	0	1	0
9	1	0	0	0	0	0	1	0
10	0	0	0	0	0	0	1	0
11	1	0	0	0	0	0	1	0
12	0	0	0	0	0	0	1	0
13	1	0	0	0	0	0	1	0
14	0	0	0	0	0	0	1	0
15	1	0	0	0	0	0	1	0

Table 33-36. PSB Packet Definition (Contd.)

Dependencies	TriggerEn	Generation Scenario	Periodic, based on the number of output bytes generated while tracing. PSB is sent when IA32_RTIT_STATUS.PacketByteCnt=0, and each time it crosses the software selected threshold after that. May be sent for other micro-architectural conditions as well.
Description	PSB is a unique pattern in the packet output log, and hence serves as a sync point for the decoder. It is a pattern that the decoder can search for in order to get aligned on packet boundaries. This packet is periodic, based on the number of output bytes, as indicated by IA32_RTIT_STATUS.PacketByteCnt. The period is chosen by software, via IA32_RTIT_CTL.PSBFreq (see Section 33.2.8.2). Note, however, that the PSB period is not precise, it simply reflects the average number of output bytes that should pass between PSBs. The processor will make a best effort to insert PSB as quickly after the selected threshold is reached as possible. The processor also may send extra PSB packets for some micro-architectural conditions. PSB also serves as the leading packet for a set of "status-only" packets collectively known as PSB+ (Section 33.3.7).		
Application	When a PSB is seen, the decoder should interpret all following packets as "status only", until either a PSBEND or OVF packet is encountered. "Status only" implies that the binding and ordering rules to which these packets normally adhere are ignored, and the state they carry can instead be applied to the IP payload in the FUP packet that is included.		

33.4.2.18 PSBEND Packet

Table 33-37. PSBEND Packet Definition

Name	PSBEND Packet		
Packet Format	<table><tr><th></th><th>7</th><th>6</th><th>5</th><th>4</th><th>3</th><th>2</th><th>1</th><th>0</th></tr><tr><td>0</td><td>0</td><td>0</td><td>0</td><td>0</td><td>0</td><td>0</td><td>1</td><td>0</td></tr><tr><td>1</td><td>0</td><td>0</td><td>1</td><td>0</td><td>0</td><td>0</td><td>1</td><td>1</td></tr></table>		
Dependencies	TriggerEn	Generation Scenario	Always follows PSB packet, separated by PSB+ packets
Description	PSBEND is simply a terminator for the series of "status only" (PSB+) packets that follow PSB (Section 33.3.7).		
Application	When a PSBEND packet is seen, the decoder should cease to treat packets as "status only".		

33.4.2.19 Maintenance (MNT) Packet

Table 33-38. MNT Packet Definition

Name	Maintenance (MNT) Packet		
Packet Format			
Dependencies	TriggerEn	Generation Scenario	Implementation specific.
Description	This packet is generated by hardware, the payload meaning is model-specific.		
Application	Unless a decoder has been extended for a particular family/model/stepping to interpret MNT packet payloads, this packet should simply be ignored. It does not bind to any IP.		

	7	6	5	4	3	2	1	0
0	0	0	0	0	0	0	1	0
1	1	1	0	0	0	0	1	1
2	1	0	0	0	1	0	0	0
3	Payload[7:0]							
4	Payload[15:8]							
5	Payload[23:16]							
6	Payload[31:24]							
7	Payload[39:32]							
8	Payload[47:40]							
9	Payload[55:48]							
10	Payload[63:56]							

33.4.2.20 PAD Packet

Table 33-39. PAD Packet Definition

Name	PAD Packet		
Packet Format			
Dependencies	TriggerEn	Generation Scenario	Implementation specific
Description	PAD is simply a NOP packet. Processor implementations may choose to add pad packets to improve packet alignment or for implementation-specific reasons.		
Application	Ignore PAD packets.		

	7	6	5	4	3	2	1	0
0	0	0	0	0	0	0	0	0

33.4.2.21 PTWRITE (PTW) Packet

Table 33-40. PTW Packet Definition

<table>
<tr><td>Name</td><td colspan="4">PTW Packet</td></tr>
<tr><td>Packet Format</td><td colspan="4">
<table>
<tr><td></td><td>7</td><td>6</td><td>5</td><td>4</td><td>3</td><td>2</td><td>1</td><td>0</td></tr>
<tr><td>0</td><td>0</td><td>0</td><td>0</td><td>0</td><td>0</td><td>0</td><td>1</td><td>0</td></tr>
<tr><td>1</td><td>IP</td><td colspan="2">PayloadBytes</td><td>1</td><td>0</td><td>0</td><td>1</td><td>0</td></tr>
<tr><td>2</td><td colspan="8">Payload[7:0]</td></tr>
<tr><td>3</td><td colspan="8">Payload[15:8]</td></tr>
<tr><td>4</td><td colspan="8">Payload[23:16]</td></tr>
<tr><td>5</td><td colspan="8">Payload[31:24]</td></tr>
<tr><td>6</td><td colspan="8">Payload[39:32]</td></tr>
<tr><td>7</td><td colspan="8">Payload[47:40]</td></tr>
<tr><td>8</td><td colspan="8">Payload[55:48]</td></tr>
<tr><td>9</td><td colspan="8">Payload[63:56]</td></tr>
</table>
</td></tr>
<tr><td></td><td colspan="4">The PayloadBytes field indicates the number of bytes of payload that follow the header bytes. Encodings are as follows:
<table>
<tr><th>PayloadBytes</th><th>Bytes of Payload</th></tr>
<tr><td>‘00</td><td>4</td></tr>
<tr><td>‘01</td><td>8</td></tr>
<tr><td>‘10</td><td>Reserved</td></tr>
<tr><td>‘11</td><td>Reserved</td></tr>
</table>
IP bit indicates if a FUP, whose payload will be the IP of the PTWRITE instruction, will follow.</td></tr>
<tr><td>Dependencies</td><td>TriggerEn && ContextEn && FilterEn && PTWEn</td><td>Generation Scenario</td><td colspan="2">PTWRITE Instruction</td></tr>
<tr><td>Description</td><td colspan="4">Contains the value held in the PTWRITE operand.
This packet is CYC-eligible, and hence will generate a CYC packet if IA32_RTIT_CTL.CYCEn=1 and any CYC Threshold has been reached.</td></tr>
<tr><td>Application</td><td colspan="4">Binds to the associated PTWRITE instruction. The IP of the PTWRITE will be provided by a following FUP, when PTW.IP=1.</td></tr>
</table>

33.4.2.22 Execution Stop (EXSTOP) Packet

Table 33-41. EXSTOP Packet Definition

<table>
<tr><td>Name</td><td colspan="4">EXSTOP Packet</td></tr>
<tr><td>Packet Format</td><td colspan="4">
<table>
<tr><td></td><td>7</td><td>6</td><td>5</td><td>4</td><td>3</td><td>2</td><td>1</td><td>0</td></tr>
<tr><td>0</td><td>0</td><td>0</td><td>0</td><td>0</td><td>0</td><td>0</td><td>1</td><td>0</td></tr>
<tr><td>1</td><td>IP</td><td>1</td><td>1</td><td>0</td><td>0</td><td>0</td><td>1</td><td>0</td></tr>
</table>
IP bit indicates if a FUP will follow.
</td></tr>
<tr><td>Dependencies</td><td>TriggerEn && PwrEvtEn</td><td>Generation Scenario</td><td colspan="2">C-state entry, P-state change, or other processor clock power-down. Includes :
▪ Entry to C-state deeper than C0.0
▪ TM1/2
▪ STPCLK#
▪ Frequency change due to IA32_CLOCK_MODULATION, Turbo</td></tr>
<tr><td>Description</td><td colspan="4">This packet indicates that software execution has stopped due to processor clock powerdown. Later packets will indicate when execution resumes.
If EXSTOP is generated while ContextEn is set, the IP bit will be set, and EXSTOP will be followed by a FUP packet containing the IP at which execution stopped. More precisely, this will be the IP of the oldest instruction that has not yet completed.
This packet is CYC-eligible, and hence will generate a CYC packet if IA32_RTIT_CTL.CYCEn=1 and any CYC Threshold has been reached.</td></tr>
<tr><td>Application</td><td colspan="4">If a FUP follows EXSTOP (hence IP bit set), the EXSTOP can be bound to the FUP IP. Otherwise the IP is not known. Time of powerdown can be inferred from the preceding CYC, if CYCEn=1. Combined with the TSC at the time of wake (if TSCEn=1), this can be used to determine the duration of the powerdown.</td></tr>
</table>

33.4.2.23 MWAIT Packet

Table 33-42. MWAIT Packet Definition

<table>
<tr><td>Name</td><td colspan="5">MWAIT Packet</td></tr>
<tr><td>Packet Format</td><td colspan="5">
<table>
<tr><td></td><td>7</td><td>6</td><td>5</td><td>4</td><td>3</td><td>2</td><td>1</td><td>0</td></tr>
<tr><td>0</td><td>0</td><td>0</td><td>0</td><td>0</td><td>0</td><td>0</td><td>1</td><td>0</td></tr>
<tr><td>1</td><td>1</td><td>1</td><td>0</td><td>0</td><td>0</td><td>0</td><td>1</td><td>0</td></tr>
<tr><td>2</td><td colspan="8">MWAIT Hints[7:0]</td></tr>
<tr><td>3</td><td colspan="8">Reserved</td></tr>
<tr><td>4</td><td colspan="8">Reserved</td></tr>
<tr><td>5</td><td colspan="8">Reserved</td></tr>
<tr><td>6</td><td colspan="6">Reserved</td><td colspan="2">EXT[1:0]</td></tr>
<tr><td>7</td><td colspan="8">Reserved</td></tr>
<tr><td>8</td><td colspan="8">Reserved</td></tr>
<tr><td>9</td><td colspan="8">Reserved</td></tr>
</table>
</td></tr>
<tr><td>Dependencies</td><td>TriggerEn && PwrEvtEn && ContextEn</td><td>Generation Scenario</td><td colspan="3">MWAIT, UMWAIT, or TPAUSE instructions, or I/O redirection to MWAIT, that complete without fault or VMexit.</td></tr>
<tr><td>Description</td><td colspan="5">Indicates that an MWAIT operation to C-state deeper than C0.0 completed. The MWAIT hints and extensions passed in by software are exposed in the payload. For UMWAIT and TPAUSE, the EXT field holds the input register value that determines the optimized state requested.
For entry to some highly optimized C0 sub-C-states, such as C0.1, no MWAIT packet is generated.
This packet is CYC-eligible, and hence will generate a CYC packet if IA32_RTIT_CTL.CYCEn=1 and any CYC Threshold has been reached.</td></tr>
<tr><td>Application</td><td colspan="5">The binding for the upcoming EXSTOP packet also applies to the MWAIT packet. See Section 33.4.2.22.</td></tr>
</table>

33.4.2.24 Power Entry (PWRE) Packet

Table 33-43. PWRE Packet Definition

<table>
<tr><td>Name</td><td colspan="4">PWRE Packet</td></tr>
<tr><td>Packet Format</td><td colspan="4">
<table>
<tr><td></td><td>7</td><td>6</td><td>5</td><td>4</td><td>3</td><td>2</td><td>1</td><td>0</td></tr>
<tr><td>0</td><td>0</td><td>0</td><td>0</td><td>0</td><td>0</td><td>0</td><td>1</td><td>0</td></tr>
<tr><td>1</td><td>0</td><td>0</td><td>1</td><td>0</td><td>0</td><td>0</td><td>1</td><td>0</td></tr>
<tr><td>2</td><td>HW</td><td colspan="7">Reserved</td></tr>
<tr><td>3</td><td colspan="4">Resolved Thread C-State</td><td colspan="4">Resolved Thread Sub C-State</td></tr>
</table>
</td></tr>
<tr><td>Dependencies</td><td>TriggerEn && PwrEvtEn</td><td>Generation Scenario</td><td colspan="2">Transition to a C-state deeper than C0.0.</td></tr>
<tr><td>Description</td><td colspan="4">Indicates processor entry to the resolved thread C-state and sub C-state indicated. The processor will remain in this C-state until either another PWRE indicates the processor has moved to a C-state deeper than C0.0, or a PWRX packet indicates a return to C0.0.
For entry to some highly optimized C0 sub-C-states, such as C0.1, no PWRE packet is generated.
Note that some CPUs may allow MWAIT to request a deeper C-state than is supported by the core. These deeper C-states may have platform-level implications that differentiate them. However, the PWRE packet will provide only the resolved thread C-state, which will not exceed that supported by the core.
If the C-state entry was initiated by hardware, rather than a direct software request (such as MWAIT, UMWAIT, TPAUSE, HLT, or shutdown), the HW bit will be set to indicate this. Hardware Duty Cycling (see Section 15.5, “Hardware Duty Cycling (HDC)” in the Intel® 64 and IA-32 Architectures Software Developer’s Manual, Volume 3B) is an example of such a case.</td></tr>
<tr><td>Application</td><td colspan="4">When transitioning from C0.0 to a deeper C-state, the PWRE packet will be followed by an EXSTOP. If that EXSTOP packet has the IP bit set, then the following FUP will provide the IP at which the C-state entry occurred. Subsequent PWRE packets generated before the next PWRX should bind to the same IP.</td></tr>
</table>

33.4.2.25 Power Exit (PWRX) Packet

Table 33-44. PWRX Packet Definition

<table>
<tr><td>Name</td><td colspan="4">PWRX Packet</td></tr>
<tr><td>Packet Format</td><td colspan="4">
<table>
<tr><td></td><td>7</td><td>6</td><td>5</td><td>4</td><td>3</td><td>2</td><td>1</td><td>0</td></tr>
<tr><td>0</td><td>0</td><td>0</td><td>0</td><td>0</td><td>0</td><td>0</td><td>1</td><td>0</td></tr>
<tr><td>1</td><td>1</td><td>0</td><td>1</td><td>0</td><td>0</td><td>0</td><td>1</td><td>0</td></tr>
<tr><td>2</td><td colspan="4">Last Core C-State</td><td colspan="4">Deepest Core C-State</td></tr>
<tr><td>3</td><td colspan="4">Reserved</td><td colspan="4">Wake Reason</td></tr>
<tr><td>4</td><td colspan="8">Reserved</td></tr>
<tr><td>5</td><td colspan="8">Reserved</td></tr>
<tr><td>6</td><td colspan="8">Reserved</td></tr>
</table>
</td></tr>
<tr><td>Dependencies</td><td>TriggerEn && PwrEvtEn</td><td>Generation Scenario</td><td colspan="2">Transition from a C-state deeper than C0.0 to C0.</td></tr>
<tr><td>Description</td><td colspan="4">Indicates processor return to thread C0 from a C-state deeper than C0.0.
For return from some highly optimized C0 sub-C-states, such as C0.1, no PWRX packet is generated.
The Last Core C-State field provides the MWAIT encoding for the core C-state at the time of the wake. The Deepest Core C-State provides the MWAIT encoding for the deepest core C-state achieved during the sleep session, or since leaving thread C0. MWAIT encodings for C-states can be found in Table 4-11 in the Intel® 64 and IA-32 Architectures Software Developer's Manual, Volume 2B. Note that these values reflect only the core C-state, and hence will not exceed the maximum supported core C-state, even if deeper C-states can be requested.
The Wake Reason field is one-hot, encoded as follows:
<table>
<tr><th>Bit</th><th>Field</th><th>Meaning</th></tr>
<tr><td>0</td><td>Interrupt</td><td>Wake due to external interrupt received.</td></tr>
<tr><td>1</td><td>Timer Deadline</td><td>Wake due to timer expiration, such as UMWAIT/TPAUSE TSC-quanta.</td></tr>
<tr><td>2</td><td>Store to Monitored Address</td><td>Wake due to store to monitored address.</td></tr>
<tr><td>3</td><td>HW Wake</td><td>Wake due to hardware autonomous condition, such as HDC.</td></tr>
</table>
</td></tr>
<tr><td>Application</td><td colspan="4">PWRX will always apply to the same IP as the PWRE. The time of wake can be discerned from (optional) timing packets that precede PWRX.</td></tr>
</table>

33.4.2.26 Block Begin Packet (BBP)

Table 33-45. Block Begin Packet Definition

<table>
<tr><td>Name</td><td colspan="4">BBP</td></tr>
<tr><td>Packet Format</td><td colspan="4">
<table>
<tr><td></td><td>7</td><td>6</td><td>5</td><td>4</td><td>3</td><td>2</td><td>1</td><td>0</td></tr>
<tr><td>0</td><td>0</td><td>0</td><td>0</td><td>0</td><td>0</td><td>0</td><td>1</td><td>0</td></tr>
<tr><td>1</td><td>0</td><td>1</td><td>1</td><td>0</td><td>0</td><td>0</td><td>1</td><td>1</td></tr>
<tr><td>2</td><td>SZ</td><td colspan="3">Reserved</td><td colspan="4">Type[4:0]</td></tr>
</table>
</td></tr>
<tr><td>Dependencies</td><td>TriggerEn</td><td>Generation Scenario</td><td colspan="2">PEBS event, if IA32_PEBS_ENABLE.OUTPUT=1.</td></tr>
<tr><td>Description</td><td colspan="4">This packet indicates the beginning of a block of packets which are collectively tied to a single event or instruction. The size of the block item payloads within this block is provided by the Size (SZ) bit:
SZ=0: 8-byte block items
SZ=1: 4-byte block items
The meaning of the BIP payloads is provided by the Type field:
<table>
<tr><th>BBP.Type</th><th>Block name</th></tr>
<tr><td>0x00</td><td>Reserved</td></tr>
<tr><td>0x01</td><td>General-Purpose Registers</td></tr>
<tr><td>0x02..0x03</td><td>Reserved</td></tr>
<tr><td>0x04</td><td>PEBS Basic</td></tr>
<tr><td>0x05</td><td>PEBS Memory</td></tr>
<tr><td>0x06..0x07</td><td>Reserved</td></tr>
<tr><td>0x08</td><td>LBR Block 0</td></tr>
<tr><td>0x09</td><td>LBR Block 1</td></tr>
<tr><td>0x0A</td><td>LBR Block 2</td></tr>
<tr><td>0x0B..0x0F</td><td>Reserved</td></tr>
<tr><td>0x10</td><td>XMM Registers</td></tr>
<tr><td>0x11..0x1F</td><td>Reserved</td></tr>
</table>
</td></tr>
<tr><td>Application</td><td colspan="4">A BBP will always be followed by a Block End Packet (BEP), and when the block is generated while ContextEn=1 that BEP will have IP=1 and be followed by a FUP that provides the IP to which the block should be bound. Note that, in addition to BEP, a block can be terminated by a BBP (indicating the start of a new block) or an OVF packet.</td></tr>
</table>

33.4.2.27 Block Item Packet (BIP)

Table 33-46. Block Item Packet Definition

<table>
<tr><td>Name</td><td colspan="4">BIP</td></tr>
<tr><td>Packet Format</td><td colspan="4">If the preceding BBP.SZ=0:
<table>
<tr><th></th><th>7</th><th>6</th><th>5</th><th>4</th><th>3</th><th>2</th><th>1</th><th>0</th></tr>
<tr><td>0</td><td colspan="5">ID[5:0]</td><td>1</td><td>0</td><td>0</td></tr>
<tr><td>1</td><td colspan="8">Payload[7:0]</td></tr>
<tr><td>2</td><td colspan="8">Payload[15:8]</td></tr>
<tr><td>3</td><td colspan="8">Payload[23:16]</td></tr>
<tr><td>4</td><td colspan="8">Payload[31:24]</td></tr>
<tr><td>5</td><td colspan="8">Payload[39:32]</td></tr>
<tr><td>6</td><td colspan="8">Payload[47:40]</td></tr>
<tr><td>7</td><td colspan="8">Payload[55:48]</td></tr>
<tr><td>8</td><td colspan="8">Payload[63:56]</td></tr>
</table>
If the preceding BBP.SZ=1:
<table>
<tr><th></th><th>7</th><th>6</th><th>5</th><th>4</th><th>3</th><th>2</th><th>1</th><th>0</th></tr>
<tr><td>0</td><td colspan="5">ID[5:0]</td><td>1</td><td>0</td><td>0</td></tr>
<tr><td>1</td><td colspan="8">Payload[7:0]</td></tr>
<tr><td>2</td><td colspan="8">Payload[15:8]</td></tr>
<tr><td>3</td><td colspan="8">Payload[23:16]</td></tr>
<tr><td>4</td><td colspan="8">Payload[31:24]</td></tr>
</table></td></tr>
<tr><td>Dependencies</td><td>TriggerEn</td><td>Generation Scenario</td><td colspan="2">See BBP.</td></tr>
<tr><td>Description</td><td colspan="4">The size of the BIP payload is determined by the Size field in the preceding BBP packet.
The BIP header provides the ID value that, when combined with the Type field from the preceding BBP, uniquely identifies the state value held in the BIP payload. See Table 33-47 below for the complete list.</td></tr>
<tr><td>Application</td><td colspan="4">See BBP.</td></tr>
</table>

BIP State Value Encodings

The table below provides the encoding values for all defined block items. State items that are larger than 8 bytes, such as XMM register values, are broken into multiple 8-byte components. BIP packets with Size=1 (4 byte payload) will provide only the lower 4 bytes of the associated state value.

Table 33-47. BIP Encodings

BBP.Type	BIP.ID	State Value
General-Purpose Registers		
0x01	0x00	R/EFLAGS
0x01	0x01	R/EIP
0x01	0x02	R/EAX
0x01	0x03	R/ECX

Table 33-47. BIP Encodings (Contd.)

BBP.Type	BIP.ID	State Value
0x01	0x04	R/EDX
0x01	0x05	R/EBX
0x01	0x06	R/ESP
0x01	0x07	R/EBP
0x01	0x08	R/ESI
0x01	0x09	R/EDI
0x01	0x0A	R8
0x01	0x0B	R9
0x01	0x0C	R10
0x01	0x0D	R11
0x01	0x0E	R12
0x01	0x0F	R13
0x01	0x10	R14
0x01	0x11	R15
PEBS Basic Info (Section 20.9.2.2.1)		
0x04	0x00	Instruction Pointer
0x04	0x01	Applicable Counters
0x04	0x02	Timestamp
PEBS Memory Info (Section 20.9.2.2.2)		
0x05	0x00	MemAccessAddress
0x05	0x01	MemAuxInfo
0x05	0x02	MemAccessLatency
0x05	0x03	TSXAuxInfo
LBR_0		
0x08	0x00	LBR[TOS-0]_FROM_IP
0x08	0x01	LBR[TOS-0]_TO_IP
0x08	0x02	LBR[TOS-0]_INFO
0x08	0x03	LBR[TOS-1]_FROM_IP
0x08	0x04	LBR[TOS-1]_TO_IP
0x08	0x05	LBR[TOS-1]_INFO
0x08	0x06	LBR[TOS-2]_FROM_IP
0x08	0x07	LBR[TOS-2]_TO_IP
0x08	0x08	LBR[TOS-2]_INFO
0x08	0x09	LBR[TOS-3]_FROM_IP
0x08	0x0A	LBR[TOS-3]_TO_IP
0x08	0x0B	LBR[TOS-3]_INFO
0x08	0x0C	LBR[TOS-4]_FROM_IP
0x08	0x0D	LBR[TOS-4]_TO_IP

Table 33-47. BIP Encodings (Contd.)

BBP.Type	BIP.ID	State Value
0x08	0x0E	LBR[TOS-4]_INFO
0x08	0x0F	LBR[TOS-5]_FROM_IP
0x08	0x10	LBR[TOS-5]_TO_IP
0x08	0x11	LBR[TOS-5]_INFO
0x08	0x12	LBR[TOS-6]_FROM_IP
0x08	0x13	LBR[TOS-6]_TO_IP
0x08	0x14	LBR[TOS-6]_INFO
0x08	0x15	LBR[TOS-7]_FROM_IP
0x08	0x16	LBR[TOS-7]_TO_IP
0x08	0x17	LBR[TOS-7]_INFO
0x08	0x18	LBR[TOS-8]_FROM_IP
0x08	0x19	LBR[TOS-8]_TO_IP
0x08	0x1A	LBR[TOS-8]_INFO
0x08	0x1B	LBR[TOS-9]_FROM_IP
0x08	0x1C	LBR[TOS-9]_TO_IP
0x08	0x1D	LBR[TOS-9]_INFO
0x08	0x1E	LBR[TOS-10]_FROM_IP
0x08	0x1F	LBR[TOS-10]_TO_IP
LBR_1		
0x09	0x00	LBR[TOS-10]_INFO
0x09	0x01	LBR[TOS-11]_FROM_IP
0x09	0x02	LBR[TOS-11]_TO_IP
0x09	0x03	LBR[TOS-11]_INFO
0x09	0x04	LBR[TOS-12]_FROM_IP
0x09	0x05	LBR[TOS-12]_TO_IP
0x09	0x06	LBR[TOS-12]_INFO
0x09	0x07	LBR[TOS-13]_FROM_IP
0x09	0x08	LBR[TOS-13]_TO_IP
0x09	0x09	LBR[TOS-13]_INFO
0x09	0x0A	LBR[TOS-14]_FROM_IP
0x09	0x0B	LBR[TOS-14]_TO_IP
0x09	0x0C	LBR[TOS-14]_INFO
0x09	0x0D	LBR[TOS-15]_FROM_IP
0x09	0x0E	LBR[TOS-15]_TO_IP
0x09	0x0F	LBR[TOS-15]_INFO
0x09	0x10	LBR[TOS-16]_FROM_IP
0x09	0x11	LBR[TOS-16]_TO_IP
0x09	0x12	LBR[TOS-16]_INFO

Table 33-47. BIP Encodings (Contd.)

BBP.Type	BIP.ID	State Value
0x09	0x13	LBR[TOS-17]_FROM_IP
0x09	0x14	LBR[TOS-17]_TO_IP
0x09	0x15	LBR[TOS-17]_INFO
0x09	0x16	LBR[TOS-18]_FROM_IP
0x09	0x17	LBR[TOS-18]_TO_IP
0x09	0x18	LBR[TOS-18]_INFO
0x09	0x19	LBR[TOS-19]_FROM_IP
0x09	0x1A	LBR[TOS-19]_TO_IP
0x09	0x1B	LBR[TOS-19]_INFO
0x09	0x1C	LBR[TOS-20]_FROM_IP
0x09	0x1D	LBR[TOS-20]_TO_IP
0x09	0x1E	LBR[TOS-20]_INFO
0x09	0x1F	LBR[TOS-21]_FROM_IP
LBR_2		
0x0A	0x00	LBR[TOS-21]_TO_IP
0x0A	0x01	LBR[TOS-21]_INFO
0x0A	0x02	LBR[TOS-22]_FROM_IP
0x0A	0x03	LBR[TOS-22]_TO_IP
0x0A	0x04	LBR[TOS-22]_INFO
0x0A	0x05	LBR[TOS-23]_FROM_IP
0x0A	0x06	LBR[TOS-23]_TO_IP
0x0A	0x07	LBR[TOS-23]_INFO
0x0A	0x08	LBR[TOS-24]_FROM_IP
0x0A	0x09	LBR[TOS-24]_TO_IP
0x0A	0x0A	LBR[TOS-24]_INFO
0x0A	0x0B	LBR[TOS-25]_FROM_IP
0x0A	0x0C	LBR[TOS-25]_TO_IP
0x0A	0x0D	LBR[TOS-25]_INFO
0x0A	0x0E	LBR[TOS-26]_FROM_IP
0x0A	0x0F	LBR[TOS-26]_TO_IP
0x0A	0x10	LBR[TOS-26]_INFO
0x0A	0x11	LBR[TOS-27]_FROM_IP
0x0A	0x12	LBR[TOS-27]_TO_IP
0x0A	0x13	LBR[TOS-27]_INFO
0x0A	0x14	LBR[TOS-28]_FROM_IP
0x0A	0x15	LBR[TOS-28]_TO_IP
0x0A	0x16	LBR[TOS-28]_INFO
0x0A	0x17	LBR[TOS-29]_FROM_IP

Table 33-47. BIP Encodings (Contd.)

BBP.Type	BIP.ID	State Value
0x0A	0x18	LBR[TOS-29]_TO_IP
0x0A	0x19	LBR[TOS-29]_INFO
0x0A	0x1A	LBR[TOS-30]_FROM_IP
0x0A	0x1B	LBR[TOS-30]_TO_IP
0x0A	0x1C	LBR[TOS-30]_INFO
0x0A	0x1D	LBR[TOS-31]_FROM_IP
0x0A	0x1E	LBR[TOS-31]_TO_IP
0x0A	0x1F	LBR[TOS-31]_INFO
XMM Registers		
0x10	0x00	XMM0_Q0
0x10	0x01	XMM0_Q1
0x10	0x02	XMM1_Q0
0x10	0x03	XMM1_Q1
0x10	0x04	XMM2_Q0
0x10	0x05	XMM2_Q1
0x10	0x06	XMM3_Q0
0x10	0x07	XMM3_Q1
0x10	0x08	XMM4_Q0
0x10	0x09	XMM4_Q1
0x10	0x0A	XMM5_Q0
0x10	0x0B	XMM5_Q1
0x10	0x0C	XMM6_Q0
0x10	0x0D	XMM6_Q1
0x10	0x0E	XMM7_Q0
0x10	0x0F	XMM7_Q1
0x10	0x10	XMM8_Q0
0x10	0x11	XMM8_Q1
0x10	0x12	XMM9_Q0
0x10	0x13	XMM9_Q1
0x10	0x14	XMM10_Q0
0x10	0x15	XMM10_Q1
0x10	0x16	XMM11_Q0
0x10	0x17	XMM11_Q1
0x10	0x18	XMM12_Q0
0x10	0x19	XMM12_Q1
0x10	0x1A	XMM13_Q0
0x10	0x1B	XMM13_Q1
0x10	0x1C	XMM14_Q0

Table 33-47. BIP Encodings (Contd.)

BBP.Type	BIP.ID	State Value
0x10	0x1D	XMM14_Q1
0x10	0x1E	XMM15_Q0
0x10	0x1F	XMM15_Q1

33.4.2.28 Block End Packet (BEP)

Table 33-48. Block End Packet Definition

<table>
<tr><td>Name</td><td colspan="4">BEP</td></tr>
<tr><td>Packet Format</td><td colspan="4">
<table>
<tr><td></td><td>7</td><td>6</td><td>5</td><td>4</td><td>3</td><td>2</td><td>1</td><td>0</td></tr>
<tr><td>0</td><td>0</td><td>0</td><td>0</td><td>0</td><td>0</td><td>0</td><td>1</td><td>0</td></tr>
<tr><td>1</td><td>IP</td><td>0</td><td>1</td><td>1</td><td>0</td><td>0</td><td>1</td><td>1</td></tr>
</table>
</td></tr>
<tr><td>Dependencies</td><td>TriggerEn</td><td>Generation Scenario</td><td colspan="2">See BBP.</td></tr>
<tr><td>Description</td><td colspan="4">Indicates the end of a packet block. The IP bit indicates if a FUP will follow, and will be set if ContextEn=1.</td></tr>
<tr><td>Application</td><td colspan="4">The block, from initial BBP to the BEP, binds to the FUP IP, if IP=1, and consumes the FUP.</td></tr>
</table>

33.4.2.29 Control Flow Event (CFE) Packet

Table 33-49. Control Flow Event Packet Definition

<table>
<tr><td>Name</td><td colspan="4">CFE</td></tr>
<tr><td>Packet Format</td><td colspan="4">
<table>
<tr><td></td><td>7</td><td>6</td><td>5</td><td>4</td><td>3</td><td>2</td><td>1</td><td>0</td></tr>
<tr><td>0</td><td>0</td><td>0</td><td>0</td><td>0</td><td>0</td><td>0</td><td>1</td><td>0</td></tr>
<tr><td>1</td><td>0</td><td>0</td><td>0</td><td>1</td><td>0</td><td>0</td><td>1</td><td>1</td></tr>
<tr><td>2</td><td>IP</td><td colspan="2">Reserved</td><td colspan="4">Type[4:0]</td></tr>
<tr><td>3</td><td colspan="8">Vector[7:0]</td></tr>
</table>
IP bit indicates if a stand-alone FUP will follow.
</td></tr>
<tr><td>Dependencies</td><td>IA32_RTIT_CTL.EventEn && TriggerEn && ContextEn
On ContextEn transitions, the CFE will be generated regardless of direction (1⟶0 or 0⟶1). VM exit is an exception, where CFE.VMEXIT depends only on the prior value of ContextEn.</td><td>Generation Scenario</td><td>Software interrupt, external interrupt, user interrupt, or exception, including those injected on VM entry.
INIT, SIPI, SMI, RSM, IRET, Shutdown.
VM exit, if “Conceal VMX in PT” VMCS exit control is 0.
VM entry, if “Conceal VMX in PT” VMCS entry control is 0.
TSX Abort.</td></tr>
<tr><td>Description</td><td colspan="3">This packet indicates that an asynchronous event or related event (see list above) has occurred. The type of event is provided in the packet (see Table 33-50 below), and, if the IP bit is set, the IP at which the event occurred is provided in a stand-alone FUP packet that follows. Further, in the case of an interrupt or exception, the vector field provides the vector of the event.
The IP bit will be set only when ContextEn=1 before the event is taken, and either BranchEn=0 or else no FUP is generated for this event by BranchEn=1. There are some cases, such as SIPI and RSM, where no FUP is generated. Note that events that are not delivered to software, such as nested events or events which cause a VM exit, do not generate CFE packets.</td></tr>
<tr><td>Application</td><td colspan="3">If the IP bit is set, a FUP will follow that is stand-alone (not part of a compound packet event), and the CFE consumes the FUP. If the IP bit is not set, the CFE binds to the next FUP if PacketEn=1 (hence the CFE comes after a TIP.PGE but before the next TIP.PGD), and is stand-alone if PacketEn=0.</td></tr>
</table>

CFE Packet Type and Vector Fields

Every CFE has a Type field, which provides the type of event which generated the packet. For a subset of CFE Types, the CFE.Vector field may be valid. Details on these fields, as well as the IP to be expected in any following FUP packet, are provided in the table below.

Table 33-50. CFE Packet Type and Vector Fields Details

CFE Subtype	Type	Vector	FUP IP	Details
INTR	0x1	Event Vector	Varies	Used for interrupts (external and software), Exceptions, Faults, and NMI. FUP contains that address of the instruction that has not completed (NLIP for trap events, CLIP for fault events).
IRET	0x2	Invalid	CLIP	
SMI	0x3	Invalid	NLIP	
RSM	0x4	Invalid	None	
SIPI	0x5	SIPI Vector	None	
INIT	0x6	Invalid	NLIP	
VMENTRY	0x7	Invalid	CLIP	FUP contains IP of VMLAUNCH/VMRESUME.

Table 33-50. CFE Packet Type and Vector Fields Details (Contd.)

CFE Subtype	Type	Vector	FUP IP	Details
VMEXIT	0x8	Invalid	Varies	FUP IP varies depending on type of VM exit, but will be the address of the instruction that has not completed. Will be consistent with Guest IP saved in VMCS.
VMEXIT_INTR	0x9	Event Vector	Varies	Sent in cases where VM exit was caused by an INTR event (interrupt, exception, fault, or NMI). Vector provided is for the event which caused the VM exit. FUP IP behavior matches that of INTR type above.
SHUTDOWN	0xa	Invalid	Varies	FUP IP varies depending on the type of event that caused shutdown, but will be the address of the instruction that has not completed.
Reserved	0xb	N/A	N/A	
UINTR	0xc	User Interrupt Vector	NLIP	User interrupt delivered.
UIRET	0xd	Invalid	CLIP	Exiting from user interrupt routine.
Reserved	0xe...0x1f	N/A	N/A	Reserved

33.4.2.30 Event Data (EVD) Packet

Table 33-51. Event Data Packet Definition

<table>
<tr><td>Name</td><td colspan="4">EVD</td></tr>
<tr><td>Packet Format</td><td colspan="4">
<table>
<tr><th></th><th>7</th><th>6</th><th>5</th><th>4</th><th>3</th><th>2</th><th>1</th><th>0</th></tr>
<tr><td>0</td><td>0</td><td>0</td><td>0</td><td>0</td><td>0</td><td>0</td><td>1</td><td>0</td></tr>
<tr><td>1</td><td>0</td><td>1</td><td>0</td><td>1</td><td>0</td><td>0</td><td>1</td><td>1</td></tr>
<tr><td>2</td><td colspan="2">Reserved</td><td colspan="6">Type[5:0]</td></tr>
<tr><td>3</td><td colspan="8">Payload[7:0]</td></tr>
<tr><td>4</td><td colspan="8">Payload[15:8]</td></tr>
<tr><td>5</td><td colspan="8">Payload[23:16]</td></tr>
<tr><td>6</td><td colspan="8">Payload[31:24]</td></tr>
<tr><td>7</td><td colspan="8">Payload[39:32]</td></tr>
<tr><td>8</td><td colspan="8">Payload[47:40]</td></tr>
<tr><td>9</td><td colspan="8">Payload[55:48]</td></tr>
<tr><td>10</td><td colspan="8">Payload[63:56]</td></tr>
</table>
</td></tr>
<tr><td>Dependencies</td><td>IA32_RTIT_CTL.EventEn && TriggerEn && ContextEn</td><td>Generation Scenario</td><td colspan="2">Page fault, including those injected on VM entry.
VM exit, if “Suppress VMX packets on exit” VMCS exit control is 0.</td></tr>
<tr><td>Description</td><td colspan="4">Provides additional data about the event that caused the following CFE. The Payload field is dictated by the Type.
<table>
<tr><th>Type</th><th>Payload</th></tr>
<tr><td>‘000000</td><td>Page Fault Linear Address, same as CR2 (PFA)</td></tr>
<tr><td>‘000001</td><td>VMX Exit Qualification (VMXQ)</td></tr>
<tr><td>‘000010</td><td>VMX Exit Reason (VMXR)</td></tr>
<tr><td>‘000011 - ‘111111</td><td>Reserved</td></tr>
</table>
EVD packets are never generated in cases where a CFE is not.</td></tr>
<tr><td>Application</td><td colspan="4">EVD packets bind to the same IP (if any) as the subsequent CFE packet.</td></tr>
</table>

33.5 TRACING IN VMX OPERATION

On processors that IA32_VMX_MISC[bit 14] reports 1, TraceEn can be set in VMX operation. The VMM can configure specific VMX controls to control what virtualization-specific data is included within the trace packets (see Section 33.5.1 for details). The VMM can also configure the VMCS to limit tracing to non-root operation, or to trace across both root and non-root operation. The VMCS controls exist to simplify virtualization of Intel PT for guest use, including the “Clear IA32_RTIT_CTL” exit control (See Section 25.7.1), “Load IA32_RTIT_CTL” entry control (See Section 25.8.1), and “Intel PT uses guest physical addresses” execution control (See Section 26.5.3).

For older processors that do not support these VMCS controls, the MSR-load areas used by VMX transitions can be employed by the VMM to restrict tracing to the desired context. See Section 33.5.2 for details. Tracing with SMM Transfer Monitor is described in Section 33.6.

33.5.1 VMX-Specific Packets and VMCS Controls

In all of the usages of VMX and Intel PT, a decoder in the host or VMM context can identify the occurrences of VMX transitions with the aid of VMX-specific packets. There are four kinds of packets relevant to VMX:

- **VMCS packet.** The VMX transitions of individual VMs can be distinguished by a decoder using the VMCS-pointer field in a VMCS packet. A VMCS packet is sent on a successful execution of VMPTRLD, and its VMCS-pointer field stores the VMCS pointer loaded by that execution. See Section 33.4.2.15 for details.
- **The NR (non-root) bit in a PIP packet.** Normally, the NR bit is set in any PIP packet generated in VMX non-root operation. In addition, PIP packets are generated with each VM entry and VM exit. Thus a transition of the NR bit from 0 to 1 indicates the occurrence of a VM entry, and a transition of 1 to 0 indicates the occurrence of a VM exit.
- **CFE packet.** Identifies VM exit and VM entry operations.
- **EVD packet.** Provides the exit reason and exit qualification for VM exits.

There are VMX controls that a VMM can set to conceal some of this VMX-specific information (by suppressing its recording) and thereby prevent it from leaking across virtualization boundaries. There is one of these controls (each of which is called "conceal VMX from PT") of each type of VMX control.

Table 33-52. VMX Controls For Intel Processor Trace

Type of VMX Control	Bit Position[1]	Value	Behavior
Secondary processor-based VM-execution control	19	0	Each PIP generated in VM non-root operation will set the NR bit. PSB+ in VMX non-root operation will include the VMCS packet, to ensure that the decoder knows which guest is currently in use.
		1	Each PIP generated in VMX non-root operation will clear the NR bit. PSB+ in VMX non-root operation will not include the VMCS packet.
VM-exit control	24	0	Each VM exit generates a PIP in which the NR bit is clear, and a CFE/EVD if Event Trace is enabled. In addition, SMM VM exits generate VMCS packets.
		1	VM exits do not generate PIPs, CFEs, or EVDs, and no VMCS packets are generated on SMM VM exits.
VM-entry control	17	0	Each VM entry generates a PIP in which the NR bit is set (except VM entries that return from SMM to VMX root operation), and a CFE if Event Trace is enabled. In addition, VM entries that return from SMM generate VMCS packets.
		1	VM entries do not generate PIPs or CFEs, and no VMCS packets are generated on VM entries that return from SMM.

NOTES:

1. These are the positions of the control bits in the relevant VMX control fields.

The 0-settings of these VMX controls enable all VMX-specific packet information. The scenarios that would use these default settings also do not require the VMM to use VMX MSR-load areas to enable and disable trace-packet generation across VMX transitions.

If IA32_VMX_MISC[bit 14] reports 0, the 1-settings of the VMX controls in Table 33-52 are not supported, and VM entry will fail on any attempt to set them.

33.5.2 Managing Trace Packet Generation Across VMX Transitions

In tracing scenarios that collect packets for both VMX root operation and VMX non-root operation, a host executive can manage the MSRs associated with trace packet generation directly. The states of these MSRs need not be modified across VMX transitions.

For tracing scenarios that collect packets only within VMX root operation or only within VMX non-root operation, the VMM can toggle IA32_RTIT_CTL.TraceEn on VMX transitions.

33.5.2.1 System-Wide Tracing

When a host or VMM configures Intel PT to collect trace packets of the entire system, it can leave the relevant VMX controls clear to allow VMX-specific packets to provide information across VMX transitions.

The decoder will desire to identify the occurrence of VMX transitions. The packets of interests to a decoder are shown in Table 33-53.

Table 33-53. Packets on VMX Transitions (System-Wide Tracing)

Event	Packets	Enable	Description
VM exit	EVD.VMXR, EVD.VMXQ, CFE.VMEXIT*	EventEn	The CFE identifies the transfer as a VM exit, while the associated EVDs provide the exit reason and exit qualification.
	FUP(GuestIP)	BranchEn or EventEn	The FUP indicates at which point in the guest flow the VM exit occurred. This is important, since VM exit can be an asynchronous event. The IP will match that written into the VMCS.
	PIP(HostCR3, NR=0)		The PIP packet provides the new host CR3 value, as well as indication that the logical processor is entering VMX root operation. This allows the decoder to identify the change of executing context from guest to host and load the appropriate set of binaries to continue decode.
	TIP(HostIP)	BranchEn	The TIP indicates the destination IP, the IP of the first instruction to be executed in VMX root operation. Note, this packet could be preceded by a MODE.Exec packet (Section 33.4.2.8). This is generated only in cases where CS.D or (CS.L & EFER.LMA) change during the transition.
VM entry	CFEVMENTRY, FUP(CLIP)	EventEn	The CFE identifies the transfer as a VM entry, while the FUP identifies the VMLAUNCH/VMRESUME IP.
	PIP(GuestCR3, NR=1)	BranchEn	The PIP packet provides the new guest CR3 value, as well as indication that the logical processor is entering VMX non-root operation. This allows the decoder to identify the change of executing context from host to guest and load the appropriate set of binaries to continue decode.
	TIP(GuestIP)	BranchEn	The TIP indicates the destination IP, the IP of the first instruction to be executed in VMX non-root operation. This should match the RIP loaded from the VMCS. Note, this packet could be preceded by a MODE.Exec packet (Section 33.4.2.8). This is generated only in cases where CS.D or (CS.L & EFER.LMA) change during the transition.

Since the VMX controls that suppress packet generation are cleared, a VMCS packet will be included in all PSB+ for this usage scenario. Additionally, VMPTRLD will generate such a packet. Thus the decoder can distinguish the execution context of different VMs.

When the host VMM configures a system to collect trace packets in this scenario, it should emulate CPUID to report CPUID.(EAX=07H, ECX=0):EBX[bit 26] as 0 to guests, indicating to guests that Intel PT is not available.

VMX TSC Manipulation

The TSC packets generated while in VMX non-root operation will include any changes resulting from the use of a VMM's use of the TSC offsetting or TSC scaling VMX controls (see Chapter 26, "VMX Non-Root Operation"). In this system-wide usage model, the decoder may need to account for the effect of per-VM adjustments in the TSC packets generated in VMX non-root operation and the absence of TSC adjustments in TSC packets generated in VMX root operation. The VMM can supply this information to the decoder.

33.5.2.2 Guest-Only Tracing

A VMM can configure trace-packet generation while in VMX non-root operation for guests executing normally. This is accomplished by utilizing VMCS controls to manipulate the guest IA32_RTIT_CTL value on VMX transitions. For

older processors that do not support these VMCS controls, a VMM can use the VMX MSR-load areas on VM exits (see Section 25.7.2, "VM-Exit Controls for MSRs") and VM entries (see Section 25.8.2, "VM-Entry Controls for MSRs") to limit trace-packet generation to the guest environment.

For this usage, VM entry is programmed to enable trace packet generation, while VM exit is programmed to clear IA32_RTIT_CTL.TraceEn so as to disable trace-packet generation in the host. Further, if it is preferred that the guest packet stream contain no indication that execution was in VMX non-root operation, the VMM should set to 1 all the VMX controls enumerated in Table 33-52.

33.5.2.3 Emulation of Intel PT Traced State

If a VMM emulates an element of processor state by taking a VM exit on reads and/or writes to that piece of state, and the state element impacts Intel PT packet generation or values, it may be incumbent upon the VMM to insert or modify the output trace data.

If a VM exit is taken on a guest write to CR3 (including "MOV CR3" as well as task switches), the PIP packet normally generated on the CR3 write will be missing.

To avoid decoder confusion when the guest trace is decoded, the VMM should emulate the missing PIP by writing it into the guest output buffer. If the guest CR3 value is manipulated, the VMM may also need to manipulate the IA32_RTIT_CR3_MATCH value, in order to ensure the trace behavior matches the guest's expectation.

Similarly, if a VMM emulates the TSC value by taking a VM exit on RDTSC, the TSC packets generated in the trace may mismatch the TSC values returned by the VMM on RDTSC. To ensure that the trace can be properly aligned with software logs based on RDTSC, the VMM should either make corresponding modifications to the TSC packet values in the guest trace, or use mechanisms such as TSC offsetting or TSC scaling in place of exiting.

33.5.2.4 TSC Scaling

When TSC scaling is enabled for a guest using Intel PT, the VMM should ensure that the value of Maximum Non-Turbo Ratio[15:8] in MSR_PLATFORM_INFO (MSR 0CEH) and the TSC/"core crystal clock" ratio (EBX/EAX) in CPUID leaf 15H are set in a manner consistent with the resulting TSC rate that will be visible to the VM. This will allow the decoder to properly apply TSC packets, MTC packets (based on the core crystal clock or ART, whose frequency is indicated by CPUID leaf 15H), and CBR packets (which indicate the ratio of the processor frequency to the Max Non-Turbo frequency). Absent this, or separate indication of the scaling factor, the decoder will be unable to properly track time in the trace. See Section 33.8.3 for details on tracking time within an Intel PT trace.

33.5.2.5 Failed VM Entry

The packets generated by a failed VM entry depend both on the VMCS configuration, as well as on the type of failure. The results to expect are summarized in the table below. Note that packets in *italics* may or may not be generated, depending on implementation choice, and the point of failure.

Table 33-54. Packets on a Failed VM Entry

Usage Model	Entry Configuration	Early Failure (fall through to next IP)	Late Failure (VM exit like)
System-Wide	No use of "Load IA32_RTIT_CTL" entry control or VM-entry MSR-load area	TIP (NextIP)	*CFE.VMENTRY, FUP(CLIP) if EventEn=1* *PIP(Guest CR3, NR=1), TraceEn 0⟶1 Packets (See Section 33.2.8.3),* PIP(HostCR3, NR=0), TIP(HostIP)
VMM Only	"Load IA32_RTIT_CTL" entry control or VM-entry MSR-load area used to clear TraceEn	TIP (NextIP)	*TraceEn 0⟶1 Packets (See Section 33.2.8.3),* TIP(HostIP)
VM Only	"Load IA32_RTIT_CTL" entry control or VM-entry MSR-load area used to set TraceEn	None	None

33.5.2.6 VMX Abort

VMX abort conditions take the processor into a shutdown state. On a VM exit that leads to VMX abort, some packets (FUP, PIP) may be generated, but any expected TIP, TIP.PGE, or TIP.PGD may be dropped.

33.6 TRACING AND SMM TRANSFER MONITOR (STM)

The SMM-transfer monitor (STM) is a VMM that operates inside SMM while in VMX root operation. An STM operates in conjunction with an executive monitor. The latter operates outside SMM and in VMX root operation. Transitions from the executive monitor or its VMs to the STM are called SMM VM exits. The STM returns from SMM via a VM entry to the VM in VMX non-root operation or the executive monitor in VMX root operation.

Intel PT supports tracing in an STM similar to tracing support for VMX operation as described above in Section . As a result, on a SMM VM exit resulting from #SMI, TraceEn is neither saved nor cleared by default. Software can save the state of the trace configuration MSRs and clear TraceEn using the MSR load/save lists.

Within Event Trace, SMM VM exits generate packets indicating both an #SMI and a VM exit. Similarly, VM entries that return from SMM generate packets that indicate both an RSM and a VM entry. SMM VM exits initiated by the VMCALL instruction do not generate any CFE packet, though the subsequent VM entry returning from SMM will generate a CFE.RSM.

33.7 PACKET GENERATION SCENARIOS

The following tables provides examples of packet generation for various operations. The following acronyms are used in the packet examples below:

- CLIP - Current LIP
- NLIP - Next Sequential LIP
- BLIP - Branch Target LIP

Table 33-55 illustrates the packets generated by a series of example operations, assuming that PacketEn (TriggerEn && ContextEn && FilterEn && BranchEn) is set before and after the operation.

Table 33-55. Packet Generation under Different Example Operations

Case	Operation	Details	Packets
1	Normal non-jump operation		None
2	Conditional branch	6th branch in internal TNT buffer	TNT
3	Conditional branch	1st..5th branch in internal TNT buffer	None
4	Near indirect JMP or CALL		TIP(BLIP)
5	Direct near JMP or CALL		None
6	Near RET	Uncompressed	TIP(BLIP)
7	Near RET	Compressed, 6th branch in internal TNT buffer	TNT
8	Far Branch	Assumes no update to CR3, CS.L, or CS.D	TIP(BLIP)
9	Far Branch	Assumes update to CR3	PIP(NewCR3), TIP(BLIP)
10	Far Branch	Assumes update to CR3 and CS.D/CS.L	PIP(NewCR3), MODE.Exec, TIP(BLIP)
11	External Interrupt or NMI	Assumes no update to CR3, CS.D, or CS.L	FUP(NLIP), TIP(BLIP)
12	External Interrupt or NMI	Assumes update to CR3 and CS.D/CS.L	FUP(NLIP), PIP(NewCR3), MODE.Exec, TIP(BLIP)
13	Exception/Fault or Software Interrupt	Assumes no update to CR3, CS.D, or CS.L	FUP(CLIP), TIP(BLIP)
14	MOV to CR3		PIP(NewCR3, NR)

Table 33-55. Packet Generation under Different Example Operations

Case	Operation	Details	Packets
15	VM exit	Assumes system-wide tracing, see Section 33.5.2.1	See Table 33-53
16	VM entry	Assumes system-wide tracing, see Section 33.5.2.1	See Table 33-53
17	ENCLU[EENTER] / ENCLU[ERESUME] / ENCLU[EEXIT] / AEX/EEE	Only debug enclaves allow PacketEn to be set during enclave execution. Assumes no change to CS.L or CS.D.	FUP(CLIP), TIP(BLIP)
18	XBEGIN/XACQUIRE/XEND/XRELEASE	Does not begin/end transactional execution	None
19	XBEGIN/XACQUIRE	Assumes beginning of transactional execution	MODE.TSX(InTX=1, TXAbort=0), FUP(CLIP)
20	XEND/XRELEASE	Completes transaction	MODE.TSX(InTX=0, TXAbort=0), FUP(CLIP)
21	XABORT or Asynchronous Abort	Aborts transactional execution	MODE.TSX(InTX=0, TXAbort=1), FUP(CLIP), TIP(BLIP)
22	INIT	On BSP. Assumes no CR3, CS.D, or CS.L update.	FUP(NLIP), TIP(ResetLIP)
23	INIT	On AP, goes to wait-for-SIPI. Assumes no CR3 update.	FUP(NLIP)
24	SIPI	Assumes no CS.D or CS.L update	TIP.PGE(SIPI.LIP)
25	Wake from state deeper than C0.1, P-state change, or other scenario where timing packets (MTC, CYC) may have ceased.	TSC if TSCEn=1 TMA if TSCEn=MTCEn=1	TSC?, TMA?, CBR
26	UINTR	User interrupt handler entry.	FUP(NLIP)
27	UIRET	Exiting from user interrupt handler.	FUP(NLIP)

Table 33-56 illustrates the packets generated in example scenarios where the operation alters the value of PacketEn. Note that insertion of PSB+ is not included here, though it can be coincident with initial enabling of Intel PT. See Section 33.3.7 for details.

Table 33-56. Packet Generation with Operations That Alter the Value of PacketEn

Case	Operation	PktEn Before	PktEn After	CntxEn After	Details	Packets
1	WRMSR/XRSTORS that changes TraceEn 0 ⟶ 1	0	1	0	TSC if TSCEn=1; TMA if TSCEn=MTCEn=1	TSC?, TMA?, CBR, MODE.Exec
2	WRMSR/XRSTORS that changes TraceEn 0 ⟶ 1	0	1	1	TSC if TSCEn=1; TMA if TSCEn=MTCEn=1	TSC?, TMA?, CBR, MODE.Exec, TIP.PGE(NLIP)
3	WRMSR that changes TraceEn 1 ⟶ 0	1	0	D.C.		FUP(CLIP), TIP.PGD()
4	Taken Branch	1	0	1	Source is in IP filter region. Target is outside IP filter region.	TIP.PGD(BLIP)
5	Taken Branch, Interrupt, EEXIT, etc.	0	1	1	Source is outside IP filter region. Target is in IP filter region.	TIP.PGE(BLIP)
6	Far Branch, Interrupt, EENTER, etc.	1	0	0	Requires change to CPL or CR3, or entry to opt-out enclave.	TIP.PGD()

Table 33-56. Packet Generation with Operations That Alter the Value of PacketEn (Contd.)

Case	Operation	PktEn Before	PktEn After	CntxEn After	Details	Packets
7	Trap-like event (external interrupt, NMI, VM exit/entry, etc.)	1	0	0	Requires change to CPL or CR3.	FUP(NLIP), TIP.PGD()
8	Fault-like event (exception/fault, software interrupt, VM exit/entry, etc.)	1	0	0	Requires change to CPL or CR3.	FUP(CLIP), TIP.PGD()
9	SMI, VM exit/entry	1	0	0	TraceEn is cleared.	FUP(NLIP), TIP.PGD()
10	RSM, VM exit/entry	0	1	1	TraceEn is set.	See Case 2 for packets on enable. FUP/TIP.PGE IP is the BLIP.
11	VM Exit	1	0	0	Assumes guest-only tracing, see Section 33.5.2.2. TraceEn is cleared.	FUP(VMCSg.RIP), TIP.PGD()
12	VM entry	0	1	1	Assumes guest-only tracing, see Section 33.5.2.2. TraceEn is set.	TIP.PGE(VMCSg.RIP)

Table 33-57 illustrates examples of PTWRITE, assuming TriggerEn && PTWEn is true.

Table 33-57. Examples of PTWRITE when TriggerEn && PTWEn is True

Case	Operation	ContextEn	Details	Packets
1	MWAIT/UMWAIT gets fault or VM exit.	D.C.		None. Other trace sources may generate packets on fault or VM exit.
2	MWAIT/UMWAIT requests C0, or monitor not armed, or VMX virtual-interrupt delivery.	D.C.		None.
3	MWAIT/UMWAIT enters C-state deeper than C0.1.	0		PWRE(Cx), EXSTOP
4	MWAIT/UMWAIT enters C-state deeper than C0.1.	1		MWAIT(Cy), PWRE(Cx), EXSTOP(IP), FUP(CLIP)
5	HLT, Triple-fault shutdown, other operation that enters C1.	1		PWRE(C1), EXSTOP(IP), FUP(CLIP)
6	Hardware Duty Cycling (HDC).	1	TSC if TSCEn=1 TMA if TSCEn=MTCEn=1	PWRE(HW, C6), EXSTOP(IP), FUP(NLIP), TSC?, TMA?, CBR, PWRX(CC6, CC6, 0x8)
7	Wake event during Cx (x > 0).	D.C.	TSC if TSCEn=1 TMA if TSCEn=MTCEn=1	TSC?, TMA?, CBR, PWRX(LCC, DCC, 0x1) Other trace sources may generate packets for the wake operation (e.g., interrupt).

Table 33-58 illustrates examples of Power Event Trace, assuming TriggerEn && PwrEvtEn is true.

Table 33-58. Examples of Power Event Trace when TriggerEn && PwrEvtEn is True

Case	Operation	ContextEn && FilterEn	Details	Packets
1	PTWRITE rm32/64	0		None

Table 33-58. Examples of Power Event Trace when (Contd.)TriggerEn && PwrEvtEn is True

Case	Operation	ContextEn && FilterEn	Details	Packets
2	PTWRITE rm32	1	FUP, PTW.IP=1 if FUPonPTW=1	PTW(IP=1?, 4B, rm32_value), FUP(CLIP)?
3	PTWRITE rm64	1	FUP, PTW.IP=1 if FUPonPTW=1	PTW(IP=1?, 8B, rm64_value), FUP(CLIP)?

Table 33-59 illustrates examples of Event Trace, assuming TriggerEn && ContextEn && EventEn is true. In all cases, other trace sources (e.g., BranchEn), if enabled, may generate additional packets. For details, see the other tables in this section.

Table 33-59. Event Trace Examples when TriggerEn && ContextEn && EventEn is True

Case	Operation	ContextEn Before	ContextEn After	Details	Packets
1	IRET	1	D.C.		CFE.IRET(IP=1), FUP(CLIP)
2	IRET	0	1		CFE(IRET)
3	External interrupt, including NMI	1	D.C.		CFE.INTR(IP=1, Vector), FUP(NLIP)
4	External interrupt, including NMI	1	1	Assumes BranchEn=1, illustrates the shared FUP.	CFE.INTR(IP=0, Vector), FUP(NLIP), TIP(BLIP)
5	SW Interrupt, Exception/Fault other than #PF	1	D.C.		CFE.INTR(IP=1, Vector), FUP(CLIP)
6	Page Fault (#PF)	1	D.C.		EVD.PFA, CFE.INTR(IP=1,14), FUP(CLIP)
7	Page Fault (#PF)	0	D.C.		None
10	SMI	1	D.C.		CFE.SMI(IP=1), FUP(NLIP)
11	RSM, TraceEn restored to 1	D.C.	1		CFE.RSM(IP=0)
12	Entry to Shutdown	1	D.C.		CFE.SHUTDOWN(IP=1), FUP(CLIP)
13	VM exit caused by interrupt, fault, or SMI	1	D.C.	Assumes “Conceal VMX in PT” exit control is 0.	EVD.VMXQ, EVD.VMXR, CFE.VMEXIT_INTR(IP=1, Vector), FUP(VMCSg.LIP)
14	VM exit caused by other than interrupt, fault, or SMI	1	D.C.	Assumes “Conceal VMX in PT” exit control is 0.	EVD.VMXQ, EVD.VMXR, CFE.VMEXIT(IP=1), FUP(VMCSg.LIP)
15	VM exit caused by other than interrupt, fault, or SMI	0	1	Assumes “Conceal VMX in PT” exit control is 0.	CFE.VMEXIT(IP=0)
16	VM entry	1	D.C.	Assumes “Conceal VMX in PT” entry control is 0.	CFE.VMENTRY(IP=1), FUP(VMCSh.LIP)
17	AEX/EEE, from opt-out (non-debug) enclave	0	0		None
18	AEX/EEE, from opt-out (non-debug) enclave	0	1		CFE.INTR(IP=0)
19	AEX, from opt-in (debug) enclave	1	D.C.		CFE.INTR(IP=1, Vec), FUP(AEP LIP)
20	INIT	1	D.C.		CFE.INIT(IP=1), FUP(NLIP)
21	SIPI	1	D.C.		CFE.SIPI(IP=0)

Table 33-59. Event Trace Examples when TriggerEn && ContextEn && EventEn is True

Case	Operation	ContextEn Before	ContextEn After	Details	Packets
22	STI/CLI/POPF	1	1	Assumes a change to RFLAGS.IF.	MODE.Exec, FUP(CLIP)

33.8 SOFTWARE CONSIDERATIONS

33.8.1 Tracing SMM Code

Nothing prevents an SMM handler from configuring and enabling packet generation for its own use. As described in Section Section 33.2.9.3, SMI will always clear TraceEn, so the SMM handler would have to set TraceEn in order to enable tracing. There are some unique aspects and guidelines involved with tracing SMM code, which follow:

1. SMM should save away the existing values of any configuration MSRs that SMM intends to modify for tracing. This will allow the non-SMM tracing context to be restored before RSM.
2. It is recommended that SMM wait until it sets CSbase to 0 before enabling packet generation, to avoid possible LIP vs RIP confusion.
3. Packet output cannot be directed to SMRR memory, even while tracing in SMM.
4. Before performing RSM, SMM should take care to restore modified configuration MSRs to the values they had immediately after #SMI. This involves first disabling packet generation by clearing TraceEn, then restoring any other configuration MSRs that were modified.
5. RSM
   - — Software must ensure that TraceEn=0 at the time of RSM. Tracing RSM is not a supported usage model, and the packets generated by RSM are undefined.
   - — For processors on which Intel PT and LBR use are mutually exclusive (see Section 33.3.1.2), any RSM during which TraceEn is restored to 1 will suspend any LBR or BTS logging.

33.8.2 Cooperative Transition of Multiple Trace Collection Agents

A third-party trace-collection tool should take into consideration the fact that it may be deployed on a processor that supports Intel PT but may run under any operating system.

In such a deployment scenario, Intel recommends that tool agents follow similar principles of cooperative transition of single-use hardware resources, similar to how performance monitoring tools handle performance monitoring hardware:

- Respect the "in-use" ownership of an agent who already configured the trace configuration MSRs, see architectural MSRs with the prefix "IA32_RTIT_" in Chapter 2, "Model-Specific Registers (MSRs)" in the *Intel® 64 and IA-32 Architectures Software Developer's Manual, Volume 4*, where "in-use" can be determined by reading the "enable bits" in the configuration MSRs.
- Relinquish ownership of the trace configuration MSRs by clearing the "enabled bits" of those configuration MSRs.

33.8.3 Tracking Time

This section describes the relationships of several clock counters whose update frequencies reside in different domains that feed into the timing packets. To track time, the decoder also needs to know the regularity or irregularity of the occurrences of various timing packets that store those clock counters.

Intel PT provides time information for three different but related domains:

- Processor timestamp counter

  This counter increments at the max non-turbo or P1 frequency, and its value is returned on a RDTSC. Its frequency is fixed. The TSC packet holds the lower 7 bytes of the timestamp counter value. The TSC packet occurs occasionally and are much less frequent than the frequency of the time stamp counter. The timestamp counter will continue to increment when the processor is in deep C-States, with the exception of processors reporting CPUID.80000007H:EDX.InvariantTSC[bit 8] =0.
- Core crystal clock

  The ratio of the core crystal clock to timestamp counter frequency is known as P, and can be calculated as CPUID.15H:EBX[31:0] / CPUID.15H:EAX[31:0]. The frequency of the core crystal clock is fixed and lower than that of the timestamp counter. The periodic MTC packet is generated based on software-selected multiples of the crystal clock frequency. The MTC packet is expected to occur more frequently than the TSC packet.
- Processor core clock

  The processor core clock frequency can vary due to P-state and thermal conditions. The CYC packet provides elapsed time as measured in processor core clock cycles relative to the last CYC packet.

A decoder can use all or some combination of these packets to track time at different resolutions throughout the trace packets.

33.8.3.1 Time Domain Relationships

The three domains are related by the following formula:

```
TimeStampValue = (CoreCrystalClockValue * P) + AdjustedProcessorCycles + Software_Offset;
```

The CoreCrystalClockValue, also known as the Always Running Timer (ART) value, can provide the coarse-grained component of the TSC value. P, or the TSC/ART ratio, can be derived from CPUID leaf 15H, as described in Section 33.8.3.

The AdjustedProcessorCycles component provides the fine-grained distance from the rising edge of the last core crystal clock. Specifically, it is a cycle count in the same frequency as the timestamp counter from the last crystal clock rising edge. The value is adjusted based on the ratio of the processor core clock frequency to the Maximum Non-Turbo (or P1) frequency.

The Software_Offsets component includes software offsets that are factored into the timestamp value, such as IA32_TSC_ADJUST.

33.8.3.2 Estimating TSC within Intel PT

For many usages, it may be useful to have an estimated timestamp value for all points in the trace. The formula provided in Section 33.8.3.1 above provides the framework for how such an estimate can be calculated from the various timing packets present in the trace.

The TSC packet provides the precise timestamp value at the time it is generated; however, TSC packets are infrequent, and estimates of the current timestamp value based purely on TSC packets are likely to be very inaccurate for this reason. In order to get more precise timing information between TSC packets, CYC packets and/or MTC packets should be enabled.

MTC packets provide incremental updates of the CoreCrystalClockValue. On processors that support CPUID leaf 15H, the frequency of the timestamp counter and the core crystal clock is fixed, thus MTC packets provide a means to update the running timestamp estimate. Between two MTC packets A and B, the number of crystal clock cycles passed is calculated from the 8-bit payloads of respective MTC packets:

(CTC_B - CTC_A), where CTC_i = MTC_i[15:8] << IA32_RTIT_CTL.MTCFreq and i = A, B.

The time from a TSC packet to the subsequent MTC packet can be calculated using the TMA packet that follows the TSC packet. The TMA packet provides both the crystal clock value (lower 16 bits, in the CTC field) and the AdjustedProcessorCycles value (in the FastCounter field) that can be used in the calculation of the corresponding core crystal clock value of the TSC packet.

When the next MTC after a pair of TSC/TMA is seen, the number of crystal clocks passed since the TSC packet can be calculated by subtracting the TMA.CTC value from the time indicated by the MTC_{Next} packet by

CTC_{Delta}[15:0] = (CTC_{Next}[15:0] - TMA.CTC[15:0]), where CTC_{Next} = $MTC_{Payload}$ << IA32_RTIT_CTL.MTCFreq.

The TMA.FastCounter field provides the number of AdjustedProcessorCycles since the last crystal clock rising edge, from which it can be determined the percentage of the next crystal clock cycle that had passed at the time of the TSC packet.

CYC packets can provide further precision of an estimated timestamp value to many non-timing packets, by providing an indication of the time passed between other timing packets (MTCs or TSCs).

When enabled, CYC packets are sent preceding each CYC-eligible packet, and provide the number of processor core clock cycles that have passed since the last CYC packet. Thus between MTCs and TSCs, the accumulated CYC values can be used to estimate the AdjustedProcessorCycles component of the timestamp value. The accumulated CPU cycles will have to be adjusted to account for the difference in frequency between the processor core clock and the P1 frequency. The necessary adjustment can be estimated using the core:bus ratio value given in the CBR packet, by multiplying the accumulated cycle count value by $P1/CBR_{payload}$.

Note that stand-alone TSC packets (that is, TSC packets that are not a part of a PSB+) are typically generated only when generation of other timing packets (MTCs and CYCs) has ceased for a period of time. Example scenarios include when Intel PT is re-enabled, or on wake after a sleep state. Thus any calculated estimate of the timestamp value leading up to a TSC packet will likely result in a discrepancy, which the TSC packet serves to correct.

A greater level of precision may be achieved by calculating the CPU clock frequency, see Section 33.8.3.4 below for a method to do so using Intel PT packets.

CYCs can be used to estimate time between TSCs even without MTCs, though this will likely result in a reduction in estimated TSC precision.

33.8.3.3 VMX TSC Manipulation

When software executes in non-Root operation, additional offset and scaling factors may be applied to the TSC value. These are optional, but may be enabled via VMCS controls on a per-VM basis. See Chapter 26, “VMX Non-Root Operation” for details on VMX TSC offsetting and TSC scaling.

Like the value returned by RDTSC, TSC packets will include these adjustments, but other timing packets (such as MTC, CYC, and CBR) are not impacted. In order to use the algorithm above to estimate the TSC value when TSC scaling is in use, it will be necessary for software to account for the scaling factor. See Section 33.5.2.4 for details.

33.8.3.4 Calculating Frequency with Intel PT

Because Intel PT can provide both wall-clock time and processor clock cycle time, it can be used to measure the processor core clock frequency. Either TSC or MTC packets can be used to track the wall-clock time. By using CYC packets to count the number of processor core cycles that pass in between a pair of wall-clock time packets, the ratio between processor core clock frequency and TSC frequency can be derived. If the P1 frequency is known, it can be applied to determine the CPU frequency. See Section 33.8.3.1 above for details on the relationship between TSC, MTC, and CYC.

CHAPTER 34
INTRODUCTION TO INTEL® SOFTWARE GUARD EXTENSIONS

34.1 OVERVIEW

Intel® Software Guard Extensions (Intel® SGX) is a set of instructions and mechanisms for memory accesses added to Intel® Architecture processors. Intel SGX can encompass two collections of instruction extensions, referred to as SGX1 and SGX2, see Table 34-1 and Table 34-2. The SGX1 extensions allow an application to instantiate a protected container, referred to as an enclave. The enclave is a trusted area of memory, where critical aspects of the application functionality have hardware-enhanced confidentiality and integrity protections. New access controls to restrict access to software not resident in the enclave are also introduced. The SGX2 extensions allow additional flexibility in runtime management of enclave resources and thread execution within an enclave.

Chapter 35 covers main concepts, objects and data structure formats that interact within the Intel SGX architecture. Chapter 36 covers operational aspects ranging from preparing an enclave, transferring control to enclave code, and programming considerations for the enclave code and system software providing support for enclave execution. Chapter 37 describes the behavior of Asynchronous Enclave Exit (AEX) caused by events while executing enclave code. Chapter 38 covers the syntax and operational details of the instruction and associated leaf functions available in Intel SGX. Chapter 39 describes interaction of various aspects of IA32 and Intel® 64 architectures with Intel SGX. Chapter 40 covers Intel SGX support for application debug, profiling, and performance monitoring.

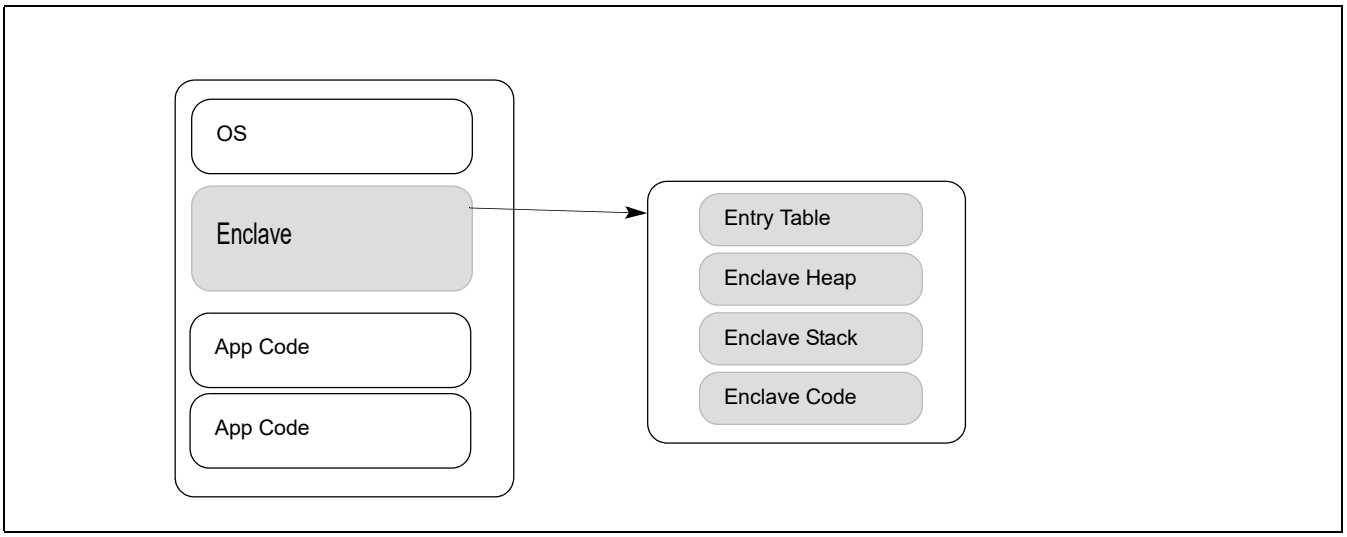

Figure 34-1. An Enclave Within the Application's Virtual Address Space

34.2 ENCLAVE INTERACTION AND PROTECTION

Intel SGX allows the protected portion of an application to be distributed in the clear. Before the enclave is built, the enclave code and data are free for inspection and analysis. The protected portion is loaded into an enclave where its code and data is measured. Once the application's protected portion of the code and data are loaded into an enclave, memory access controls are in place to restrict access by external software. An enclave can prove its identity to a remote party and provide the necessary building-blocks for secure provisioning of keys and credentials. The application can also request an enclave-specific and platform-specific key that it can use to protect keys and data that it wishes to store outside the enclave.[1]

1. For additional information, see white papers on Intel SGX at https://www.intel.com/content/www/us/en/developer/tools/isa-extensions/overview.html.

Intel SGX introduces two significant capabilities to the Intel Architecture. First is the change in enclave memory access semantics. The second is protection of the address mappings of the application.

34.3 ENCLAVE LIFE CYCLE

Enclave memory management is divided into two parts: address space allocation and memory commitment. Address space allocation is the specification of the range of linear addresses that the enclave may use. This range is called the ELRANGE. No actual resources are committed to this region. Memory commitment is the assignment of actual memory resources (as pages) within the allocated address space. This two-phase technique allows flexibility for enclaves to control their memory usage and to adjust dynamically without overusing memory resources when enclave needs are low. Commitment adds physical pages to the enclave. An operating system may support separate allocate and commit operations.

During enclave creation, code and data for an enclave are loaded from a clear-text source, i.e., from non-enclave memory.

Untrusted application code starts using an initialized enclave typically by using the EENTER leaf function provided by Intel SGX to transfer control to the enclave code residing in the protected Enclave Page Cache (EPC). The enclave code returns to the caller via the EEXIT leaf function. Upon enclave entry, control is transferred by hardware to software inside the enclave. The software inside the enclave switches the stack pointer to one inside the enclave. When returning back from the enclave, the software swaps back the stack pointer then executes the EEXIT leaf function.

On processors that support the SGX2 extensions, an enclave writer may add memory to an enclave using the SGX2 instruction set, after the enclave is built and running. These instructions allow adding additional memory resources to the enclave for use in such areas as the heap. In addition, SGX2 instructions allow the enclave to add new threads to the enclave. The SGX2 features provide additional capabilities to the software model without changing the security properties of the Intel SGX architecture.

Calling an external procedure from an enclave could be done using the EEXIT leaf function. Software would use EEXIT and a software convention between the trusted section and the untrusted section.

An active enclave consumes resources from the Enclave Page Cache (EPC, see Section 34.5). Intel SGX provides the EREMOVE instruction that an EPC manager can use to reclaim EPC pages committed to an enclave. The EPC manager uses EREMOVE on every enclave page when the enclave is torn down. After successful execution of EREMOVE the EPC page is available for allocation to another enclave.

34.4 DATA STRUCTURES AND ENCLAVE OPERATION

There are 2 main data structures associated with operating an enclave, the SGX Enclave Control Structure (SECS, see Section 35.7) and the Thread Control Structure (TCS, see Section 35.8).

There is one SECS for each enclave. The SECS contains meta-data about the enclave which is used by the hardware and cannot be directly accessed by software. Included in the SECS is a field that stores the enclave build measurement value. This field, MRENCLAVE, is initialized by the ECREATE instruction and updated by every EADD and EEXTEND. It is locked by EINIT.

Every enclave contains one or more TCS structures. The TCS contains meta-data used by the hardware to save and restore thread specific information when entering/exiting the enclave. There is one field, FLAGS, that may be accessed by software. This field can only be accessed by debug enclaves. The flag bit, DBGOPTIN, allows to single step into the thread associated with the TCS. (see Section 35.8.1)

The SECS is created when ECREATE (see Table 34-1) is executed. The TCS can be created using the EADD instruction or the SGX2 instructions (see Table 34-2).

34.5 ENCLAVE PAGE CACHE

The Enclave Page Cache (EPC) is the secure storage used to store enclave pages when they are a part of an executing enclave. For an EPC page, hardware performs additional access control checks to restrict access to the page. After the current page access checks and translations are performed, the hardware checks that the EPC page

is accessible to the program currently executing. Generally an EPC page is only accessed by the owner of the executing enclave or an instruction which is setting up an EPC page

The EPC is divided into EPC pages. An EPC page is 4KB in size and always aligned on a 4KB boundary.

Pages in the EPC can either be valid or invalid. Every valid page in the EPC belongs to one enclave instance. Each enclave instance has an EPC page that holds its SECS. The security metadata for each EPC page is held in an internal micro-architectural structure called Enclave Page Cache Map (EPCM, see Section 34.5.1).

The EPC is managed by privileged software. Intel SGX provides a set of instructions for adding and removing content to and from the EPC. The EPC may be configured by BIOS at boot time. On implementations in which EPC memory is part of system DRAM, the contents of the EPC are protected by an encryption engine.

34.5.1 Enclave Page Cache Map (EPCM)

The EPCM is a secure structure used by the processor to track the contents of the EPC. The EPCM holds one entry for each page in the EPC. The format of the EPCM is micro-architectural, and consequently is implementation dependent. However, the EPCM contains the following architectural information:

- The status of EPC page with respect to validity and accessibility.
- An SECS identifier (see Section 35.20) of the enclave to which the page belongs.
- The type of page: regular, SECS, TCS or VA.
- The linear address through which the enclave is allowed to access the page.
- The specified read/write/execute permissions on that page.

The EPCM structure is used by the CPU in the address-translation flow to enforce access-control on the EPC pages. The EPCM structure is described in Table 35-29, and the conceptual access-control flow is described in Section 35.5.

The EPCM entries are managed by the processor as part of various instruction flows.

34.6 ENCLAVE INSTRUCTIONS AND INTEL® SGX

The enclave instructions available with Intel SGX are organized as leaf functions under three instruction mnemonics: ENCLS (ring 0), ENCLU (ring 3), and ENCLV (VT root mode). Each leaf function uses EAX to specify the leaf function index, and may require additional implicit input registers as parameters. The use of EAX is implied implicitly by the ENCLS, ENCLU, and ENCLV instructions; ModR/M byte encoding is not used with ENCLS, ENCLU, and ENCLV. The use of additional registers does not use ModR/M encoding and is implied implicitly by the respective leaf function index.

Each leaf function index is also associated with a unique, leaf-specific mnemonic. A long-form expression of Intel SGX instruction takes the form of ENCLx[LEAF_MNEMONIC], where 'x' is either 'S', 'U', or 'V'. The long-form expression provides clear association of the privilege-level requirement of a given "leaf mnemonic". For simplicity, the unique "Leaf_Mnemonic" name is used (omitting the ENCLx for convenience) throughout in this document.

Details of individual SGX leaf functions are described in Chapter 38. Table 34-1 provides a summary of the instruction leaves that are available in the initial implementation of Intel SGX, which is introduced in the 6th generation Intel Core processors. Table 34-2 summarizes enhancement of Intel SGX for future Intel processors.

Table 34-1. Supervisor and User Mode Enclave Instruction Leaf Functions in Long-Form of SGX1

Supervisor Instruction	Description	User Instruction	Description
ENCLS[EADD]	Add an EPC page to an enclave.	ENCLU[EENTER]	Enter an enclave.
ENCLS[EBLOCK]	Block an EPC page.	ENCLU[EEXIT]	Exit an enclave.
ENCLS[ECREATE]	Create an enclave.	ENCLU[EGETKEY]	Create a cryptographic key.
ENCLS[EDBGRD]	Read data from a debug enclave by debugger.	ENCLU[EREPORT]	Create a cryptographic report.

Table 34-1. Supervisor and User Mode Enclave Instruction Leaf Functions in Long-Form of SGX1

Supervisor Instruction	Description	User Instruction	Description
ENCLS[EDBGWR]	Write data into a debug enclave by debugger.	ENCLU[ERESUME]	Re-enter an enclave.
ENCLS[EEXTEND]	Extend EPC page measurement.		
ENCLS[EINIT]	Initialize an enclave.		
ENCLS[ELDB]	Load an EPC page in blocked state.		
ENCLS[ELDU]	Load an EPC page in unblocked state.		
ENCLS[EPA]	Add an EPC page to create a version array.		
ENCLS[EREMOVE]	Remove an EPC page from an enclave.		
ENCLS[ETRACK]	Activate EBLOCK checks.		
ENCLS[EWB]	Write back/invalidate an EPC page.		

Table 34-2. Supervisor and User Mode Enclave Instruction Leaf Functions in Long-Form of SGX2

Supervisor Instruction	Description	User Instruction	Description
ENCLS[EAUG]	Allocate EPC page to an existing enclave.	ENCLU[EACCEPT]	Accept EPC page into the enclave.
ENCLS[EMODPR]	Restrict page permissions.	ENCLU[EMODPE]	Enhance page permissions.
ENCLS[EMODT]	Modify EPC page type.	ENCLU[EACCEPTCOPY]	Copy contents to an augmented EPC page and accept the EPC page into the enclave.

Table 34-3. VMX Operation and Supervisor Mode Enclave Instruction Leaf Functions in Long-Form of OVERSUB

VMX Operation	Description	Supervisor Instruction	Description
ENCLV[EDECVIRTCHILD]	Decrement the virtual child page count.	ENCLS[ERDINFO]	Read information about EPC page.
ENCLV[EINCVIRTCHILD]	Increment the virtual child page count.	ENCLS[ETRACKC]	Activate EBLOCK checks with conflict reporting.
ENCLV[ESETCONTEXT]	Set virtualization context.	ENCLS[ELDBC/UC]	Load an EPC page with conflict reporting.

34.7 DISCOVERING SUPPORT FOR INTEL® SGX AND ENABLING ENCLAVE INSTRUCTIONS

Detection of support of Intel SGX and enumeration of available and enabled Intel SGX resources are queried using the CPUID instruction. The enumeration interface comprises the following:

- Processor support of Intel SGX is enumerated by a feature flag in CPUID leaf 07H: CPUID.(EAX=07H, ECX=0H):EBX.SGX[bit 2]. If CPUID.(EAX=07H, ECX=0H):EBX.SGX = 1, the processor has support for Intel SGX, and requires opt-in enabling by BIOS via IA32_FEATURE_CONTROL MSR.

  If CPUID.(EAX=07H, ECX=0H):EBX.SGX = 1, CPUID will report via the available sub-leaves of CPUID.(EAX=12H) on available and/or configured Intel SGX resources.
- The available and configured Intel SGX resources enumerated by the sub-leaves of CPUID.(EAX=12H) depend on the state of BIOS configuration.

34.7.1 Intel® SGX Opt-In Configuration

On processors that support Intel SGX, IA32_FEATURE_CONTROL provides the SGX_ENABLE field (bit 18). Before system software can configure and enable Intel SGX resources, BIOS is required to set IA32_FEATURE_CONTROL.SGX_ENABLE = 1 to opt-in the use of Intel SGX by system software.

The semantics of setting SGX_ENABLE follows the rules of IA32_FEATURE_CONTROL.LOCK (bit 0). Software is considered to have opted into Intel SGX if and only if IA32_FEATURE_CONTROL.SGX_ENABLE and IA32_FEATURE_CONTROL.LOCK are set to 1. The setting of IA32_FEATURE_CONTROL.SGX_ENABLE (bit 18) is not reflected by CPUID.

Table 34-4. Intel® SGX Opt-in and Enabling Behavior

CPUID.(07H,0H):EBX.SGX	CPUID.(12H)	FEATURE_CONTROL.LOCK	FEATURE_CONTROL.SGX_ENABLE	Enclave Instruction
0	Invalid	X	X	#UD
1	Valid*	X	X	#UD**
1	Valid*	0	X	#GP
1	Valid*	1	0	#GP
1	Valid*	1	1	Available (see Table 34-5 for details of SGX1 and SGX2).
* Leaf 12H enumeration results are dependent on enablement. ** See list of conditions in the #UD section of the reference pages of ENCLS and ENCLU				

34.7.2 Intel® SGX Resource Enumeration Leaves

If CPUID.(EAX=07H, ECX=0H):EBX.SGX = 1, the processor also supports querying CPUID with EAX=12H on Intel SGX resource capability and configuration. The number of available sub-leaves in leaf 12H depends on the Opt-in and system software configuration. Information returned by CPUID.12H is thread specific; software should not assume that if Intel SGX instructions are supported on one hardware thread, they are also supported elsewhere.

A properly configured processor exposes Intel SGX functionality with CPUID.EAX=12H reporting valid information (non-zero content) in three or more sub-leaves, see Table 34-5.

- CPUID.(EAX=12H, ECX=0H) enumerates Intel SGX capability, including enclave instruction opcode support.
- CPUID.(EAX=12H, ECX=1H) enumerates Intel SGX capability of processor state configuration and enclave configuration in the SECS structure (see Table 35-3).
- CPUID.(EAX=12H, ECX >1) enumerates available EPC resources.

Table 34-5. CPUID Leaf 12H, Sub-Leaf 0 Enumeration of Intel® SGX Capabilities

CPUID.(EAX=12H,ECX=0)		Description Behavior
Register	Bits	
EAX	0	SGX1: If 1, indicates leaf functions of SGX1 instruction listed in Table 34-1 are supported.
	1	SGX2: If 1, indicates leaf functions of SGX2 instruction listed in Table 34-2 are supported.
	4:2	Reserved (0)
	5	OVERSUB: If 1, indicates Intel SGX supports instructions: EINCVIRTCHILD, EDECVIRTCHILD, and ESETCONTEXT.
	6	OVERSUB: If 1, indicates Intel SGX supports instructions: ETRACKC, ERDINFO, ELDBC, and ELDUC.
	31:7	Reserved (0)
EBX	31:0	MISCSELECT: Reports the bit vector of supported extended features that can be written to the MISC region of the SSA.
ECX	31:0	Reserved (0).

Table 34-5. CPUID Leaf 12H, Sub-Leaf 0 Enumeration of Intel® SGX Capabilities

CPUID.(EAX=12H,ECX=0)		Description Behavior
Register	Bits	
EDX	7:0	MaxEnclaveSize_Not64: the maximum supported enclave size is 2^(EDX[7:0]) bytes when not in 64-bit mode.
	15:8	MaxEnclaveSize_64: the maximum supported enclave size is 2^(EDX[15:8]) bytes when operating in 64-bit mode.
	31:16	Reserved (0).

Table 34-6. CPUID Leaf 12H, Sub-Leaf 1 Enumeration of Intel® SGX Capabilities

CPUID.(EAX=12H,ECX=1)		Description Behavior
Register	Bits	
EAX	31:0	Report the valid bits of SECS.ATTRIBUTES[31:0] that software can set with ECREATE. SECS.ATTRIBUTES[n] can be set to 1 using ECREATE only if EAX[n] is 1, where n < 32.
EBX	31:0	Report the valid bits of SECS.ATTRIBUTES[63:32] that software can set with ECREATE. SECS.ATTRIBUTES[n+32] can be set to 1 using ECREATE only if EBX[n] is 1, where n < 32.
ECX	31:0	Report the valid bits of SECS.ATTRIBUTES[95:64] that software can set with ECREATE. SECS.ATTRIBUTES[n+64] can be set to 1 using ECREATE only if ECX[n] is 1, where n < 32.
EDX	31:0	Report the valid bits of SECS.ATTRIBUTES[127:96] that software can set with ECREATE. SECS.ATTRIBUTES[n+96] can be set to 1 using ECREATE only if EDX[n] is 1, where n < 32.

On processors that support Intel SGX1 and SGX2, CPUID leaf 12H sub-leaf 2 report physical memory resources available for use with Intel SGX. These physical memory sections are typically allocated by BIOS as **Processor Reserved Memory**, and available to the OS to manage as EPC.

To enumerate how many EPC sections are available to the EPC manager, software can enumerate CPUID leaf 12H with sub-leaf index starting from 2, and decode the sub-leaf-type encoding (returned in EAX[3:0]) until the sub-leaf type is invalid. All invalid sub-leaves of CPUID leaf 12H return EAX/EBX/ECX/EDX with 0.

Table 34-7. CPUID Leaf 12H, Sub-Leaf Index 2 or Higher Enumeration of Intel® SGX Resources

CPUID.(EAX=12H,ECX > 1)		Description Behavior
Register	Bits	
EAX	3:0	0000b: This sub-leaf is invalid; EDX:ECX:EBX:EAX return 0. 0001b: This sub-leaf enumerates an EPC section. EBX:EAX and EDX:ECX provide information on the Enclave Page Cache (EPC) section. All other encodings are reserved.
	11:4	Reserved (enumerate 0).
	31:12	If EAX[3:0] = 0001b, these are bits 31:12 of the physical address of the base of the EPC section.
EBX	19:0	If EAX[3:0] = 0001b, these are bits 51:32 of the physical address of the base of the EPC section.
	31:20	Reserved.
ECX	3: 0	If ECX[3:0] = 0000b, then all bits of the EDX:ECX pair are enumerated as 0. If ECX[3:0] = 0001b, then this section has confidentiality and integrity protection. If ECX[3:0] = 0010b, then this section has confidentiality protection only. All other encodings are reserved.
	11:4	Reserved (enumerate 0).
	31:12	If EAX[3:0] = 0001b, these are bits 31:12 of the size of the corresponding EPC section within the Processor Reserved Memory.

Table 34-7. CPUID Leaf 12H, Sub-Leaf Index 2 or Higher Enumeration of Intel® SGX Resources

CPUID.(EAX=12H,ECX > 1)		Description Behavior
Register	Bits	
EDX	19: 0	If EAX[3:0] = 0001b, these are bits 51:32 of the size of the corresponding EPC section within the Processor Reserved Memory.
	31:20	Reserved.

34.8 INTEL® SGX INTERACTIONS WITH CONTROL-FLOW ENFORCEMENT TECHNOLOGY

This section discusses extensions to the Intel SGX architecture to support CET.

34.8.1 CET in Enclaves Model

Each enclave has its private configuration for CET that is not shared with the CET configurations of the enclosing application. On entry into the enclave, the CET state of the enclosing application is saved into scratchpad registers inside the processor and the CET state of the enclave is established. On an asynchronous exit, the enclave CET state is saved into the enclave state save area frame. On exit from the enclave, the CET state of the enclosing application is re-established from the scratchpad registers.

A new page type, PT_SS_FIRST, is used to denote pages in an enclave that can be used as a first page of a shadow stack.

A new page type, PT_SS_REST, is used to denote pages in an enclave that can be used as a non-first page of a shadow stack.

A page denoted as PT_SS_FIRST and PT_SS_REST will be a legal target for shadow_stack_load, shadow_stack_store, and regular load operations. Regular stores will be disallowed to such pages. A PT_SS_FIRST/PT_SS_REST page must be writeable in the IA page tables and in EPT.

When in enclave mode, shadow_stack_load and shadow_stack_store operations must be to addresses in the enclave ELRANGE.

The EAUG instruction is extended to allocate pages of type PT_SS_FIRST/PT_SS_REST; this page type requires specifying a SECINFO structure with page parameters. Shadow page permission must be R/W. Regular R/W pages may continue to be allocated by providing a SECINFO pointer value of 0. Regular R/W pages may also be allocated by providing a SECINFO structure that specifies the page parameters. The EAUG instruction creates a shadow-stack-restore token at offset 0xFF8 on a PT_SS_FIRST page. This allows a dynamically created shadow stack to be restored using the RSTORSSP instruction. The EADD and EAUG instructions disallow creation of a PT_SS_FIRST or PT_SS_REST page as the first or last page in ELRANGE.

The EADD instruction requires that the PT_SS_REST page be all zeroes. The EADD instruction requires that a PT_SS_FIRST page be all zeroes except the 8 bytes at offset 0xFF8 on that page that must have a shadow-stack-restore token. This shadow-stack-restore token must have a linear address which is the linear address of the PT_SS_FIRST page + 4096. As an enclave could be loaded at varying linear addresses, the enclave builder should not extend the measurement of the PT_SS_FIRST pages into the measurement registers. On first entry on to the enclave using a TCS, the enclave software can use the RSTORSSP instruction to restore its SSP. Subsequent to performing a RSTORSSP, the enclave software can use the INCSSP instruction to pop the previous-ssp token that is created by the RSTORSSP instruction at the top of the restored shadow stack.

On an enclave entry, the SSP will be initialized to the value in a new TCS field called PREVSSP. The PREVSSP field is written with the value of SSP on enclave exit and is loaded into SSP at enclave entry. When a TCS page is added using EADD or accepted using EACCEPT, the processor requires the PREVSSP field to be initialized to 0.

34.8.2 Operations Not Supported on Shadow Stack Pages

The following operations are not allowed on pages of type PT_SS_FIRST and PT_SS_REST:

- EACCEPTCOPY
- EMODPR
- EMODPE

34.8.3 Indirect Branch Tracking – Legacy Compatibility Treatment

The legacy code page bitmap is tested using the page offset within the ELRANGE instead of the absolute linear address of the address where ENDBRANCH was missed; see the detailed algorithm in Section 17.3.6, "Legacy Compatibility Treatment" in the *Intel® 64 and IA-32 Architectures Software Developer's Manual, Volume 1* for additional details.

CHAPTER 35
ENCLAVE ACCESS CONTROL AND DATA STRUCTURES

35.1 OVERVIEW OF ENCLAVE EXECUTION ENVIRONMENT

When an enclave is created, it has a range of linear addresses to which the processor applies enhanced access control. This range is called the ELRANGE (see Section 34.3). When an enclave generates a memory access, the existing IA32 segmentation and paging architecture are applied. Additionally, linear addresses inside the ELRANGE must map to an EPC page otherwise when an enclave attempts to access that linear address a fault is generated.

The EPC pages need not be physically contiguous. System software allocates EPC pages to various enclaves. Enclaves must abide by OS/VMM imposed segmentation and paging policies. OS/VMM-managed page tables and extended page tables provide address translation for the enclave pages. Hardware requires that these pages are properly mapped to EPC (any failure generates an exception).

Enclave entry must happen through specific enclave instructions:

- ENCLU[EENTER], ENCLU[ERESUME].

Enclave exit must happen through specific enclave instructions or events:

- ENCLU[EEXIT], Asynchronous Enclave Exit (AEX).

Attempts to execute, read, or write to linear addresses mapped to EPC pages when not inside an enclave will result in the processor altering the access to preserve the confidentiality and integrity of the enclave. The exact behavior may be different between implementations. As an example a read of an enclave page may result in the return of all one's or return of cyphertext of the cache line. Writing to an enclave page may result in a dropped write or a machine check at a later time. The processor will provide the protections as described in Section 35.4 and Section 35.5 on such accesses.

35.2 TERMINOLOGY

A memory access to the ELRANGE and initiated by an instruction executed by an enclave is called a Direct Enclave Access (Direct EA).

Memory accesses initiated by certain Intel® SGX instruction leaf functions such as ECREATE, EADD, EDBGRD, EDBGWR, ELDU/ELDB, EWB, EREMOVE, EENTER, and ERESUME to EPC pages are called Indirect Enclave Accesses (Indirect EA). Table 35-1 lists additional details of the indirect EA of SGX1 and SGX2 extensions.

Direct EAs and Indirect EAs together are called Enclave Accesses (EAs).

Any memory access that is not an Enclave Access is called a non-enclave access.

35.3 ACCESS-CONTROL REQUIREMENTS

Enclave accesses have the following access-control attributes:

- All memory accesses must conform to segmentation and paging protection mechanisms.
- Code fetches from inside an enclave to a linear address outside that enclave result in a #GP(0) exception.
- Shadow-stack-load or shadow-stack-store from inside an enclave to a linear address outside that enclave results in a #GP(0) exception.
- Non-enclave accesses to EPC memory result in undefined behavior. EPC memory is protected as described in Section 35.4 and Section 35.5 on such accesses.
- EPC pages of page types PT_REG, PT_TCS, and PT_TRIM must be mapped to ELRANGE at the linear address specified when the EPC page was allocated to the enclave using ENCLS[EADD] or ENCLS[EAUG] leaf functions. Enclave accesses through other linear address result in a #PF with the PFEC.SGX bit set.

- Direct EAs to any EPC pages must conform to the currently defined security attributes for that EPC page in the EPCM. These attributes may be defined at enclave creation time (EADD) or when the enclave sets them using SGX2 instructions. The failure of these checks results in a #PF with the PFEC.SGX bit set.
  - Target page must belong to the currently executing enclave.
  - Data may be written to an EPC page if the EPCM allow write access.
  - Data may be read from an EPC page if the EPCM allow read access.
  - Instruction fetches from an EPC page are allowed if the EPCM allows execute access.
  - Shadow-stack-load from an EPC page and shadow-stack-store to an EPC page are allowed only if the page type is PT_SS_FIRST or PT_SS_REST.
  - Data writes that are not shadow-stack-store are not allowed if the EPCM page type is PT_SS_FIRST or PT_SS_REST.
  - Target page must not have a restricted page type[1] (PT_SECS, PT_TCS, PT_VA, or PT_TRIM).
  - The EPC page must not be BLOCKED.
  - The EPC page must not be PENDING.
  - The EPC page must not be MODIFIED.

35.4 SEGMENT-BASED ACCESS CONTROL

Intel SGX architecture does not modify the segment checks performed by a logical processor. All memory accesses arising from a logical processor in protected mode (including enclave access) are subject to segmentation checks with the applicable segment register.

To ensure that outside entities do not modify the enclave's logical-to-linear address translation in an unexpected fashion, ENCLU[EENTER] and ENCLU[ERESUME] check that CS, DS, ES, and SS, if usable (i.e., not null), have segment base value of zero. A non-zero segment base value for these registers results in a #GP(0).

On enclave entry either via EENTER or ERESUME, the processor saves the contents of the external FS and GS registers, and loads these registers with values stored in the TCS at build time to enable the enclave’s use of these registers for accessing the thread-local storage inside the enclave. On EEXIT and AEX, the contents at time of entry are restored. On AEX, the values of FS and GS are saved in the SSA frame. On ERESUME, FS and GS are restored from the SSA frame. The details of these operations can be found in the descriptions of EENTER, ERESUME, EEXIT, and AEX flows.

35.5 PAGE-BASED ACCESS CONTROL

35.5.1 Access-control for Accesses that Originate from non-SGX Instructions

Intel SGX builds on the processor's paging mechanism to provide page-granular access-control for enclave pages. Enclave pages are designed to be accessible only from inside the currently executing enclave if they belong to that enclave. In addition, enclave accesses must conform to the access control requirements described in Section 35.3. or through certain Intel SGX instructions. Attempts to execute, read, or write to linear addresses mapped to EPC pages when not inside an enclave will result in the processor altering the access to preserve the confidentiality and integrity of the enclave. The exact behavior may be different between implementations.

35.5.2 Memory Accesses that Split across ELRANGE

Memory data accesses are allowed to split across ELRANGE (i.e., a part of the access is inside ELRANGE and a part of the access is outside ELRANGE) while the processor is inside an enclave. If an access splits across ELRANGE, the

1. EPCM may allow write, read or execute access only for pages with page type PT_REG.

processor splits the access into two sub-accesses (one inside ELRANGE and the other outside ELRANGE), and each access is evaluated. A code-fetch access that splits across ELRANGE results in a #GP due to the portion that lies outside of the ELRANGE.

35.5.3 Implicit vs. Explicit Accesses

Memory accesses originating from Intel SGX instruction leaf functions are categorized as either explicit accesses or implicit accesses. Table 35-1 lists the implicit and explicit memory accesses made by Intel SGX leaf functions.

35.5.3.1 Explicit Accesses

Accesses to memory locations provided as explicit operands to Intel SGX instruction leaf functions, or their linked data structures are called explicit accesses.

Explicit accesses are always made using logical addresses. These accesses are subject to segmentation, paging, extended paging, and APIC-virtualization checks, and trigger any faults/exit associated with these checks when the access is made.

The interaction of explicit memory accesses with data breakpoints is leaf-function-specific, and is documented in Section 40.3.4.

35.5.3.2 Implicit Accesses

Accesses to data structures whose physical addresses are cached by the processor are called implicit accesses. These addresses are not passed as operands of the instruction but are implied by use of the instruction.

These accesses do not trigger any access-control faults/exits or data breakpoints. Table 35-1 lists memory objects that Intel SGX instruction leaf functions access either by explicit access or implicit access. The addresses of explicit access objects are passed via register operands with the second through fourth column of Table 35-1 matching implicitly encoded registers RBX, RCX, RDX.

Physical addresses used in different implicit accesses are cached via different instructions and for different durations. The physical address of SECS associated with each EPC page is cached at the time the page is added to the enclave via ENCLS[EADD] or ENCLS[EAUG], or when the page is loaded to EPC via ENCLS[ELDB] or ENCLS[ELDU]. This binding is severed when the corresponding page is removed from the EPC via ENCLS[EREMOVE] or ENCLS[EWB]. Physical addresses of TCS and SSA pages are cached at the time of most-recent enclave entry. Exit from an enclave (ENCLU[EEXIT] or AEX) flushes this caching. Details of Asynchronous Enclave Exit is described in Chapter 37.

The physical addresses that are cached for use by implicit accesses are derived from logical (or linear) addresses after checks such as segmentation, paging, EPT, and APIC virtualization checks. These checks may trigger exceptions or VM exits. Note, however, that such exception or VM exits may not occur after a physical address is cached and used for an implicit access.

Table 35-1. List of Implicit and Explicit Memory Access by Intel® SGX Enclave Instructions

Instr. Leaf	Enum.	Explicit 1	Explicit 2	Explicit 3	Implicit
EACCEPT	SGX2	SECINFO	EPCPAGE		SECS
EACCEPTCOPY	SGX2	SECINFO	EPCPAGE (Src)	EPCPAGE (Dst)	
EADD	SGX1	PAGEINFO and linked structures	EPCPAGE		
EAUG	SGX2	PAGEINFO and linked structures	EPCPAGE		SECS
EBLOCK	SGX1	EPCPAGE			SECS
ECREATE	SGX1	PAGEINFO and linked structures	EPCPAGE		
EDBGRD	SGX1	EPCADDR	Destination		SECS
EDBGWR	SGX1	EPCADDR	Source		SECS
EDECVIRTCHILD	OVERSUB	EPCPAGE	SECS		
EENTER	SGX1	TCS and linked SSA			SECS

Table 35-1. List of Implicit and Explicit Memory Access by Intel® SGX Enclave Instructions (Contd.)

Instr. Leaf	Enum.	Explicit 1	Explicit 2	Explicit 3	Implicit
EEXIT	SGX1				SECS, TCS
EEXTEND	SGX1	SECS	EPCPAGE		
EGETKEY	SGX1	KEYREQUEST	KEY		SECS
EINCVIRTCHILD	OVERSUB	EPCPAGE	SECS		
EINIT	SGX1	SIGSTRUCT	SECS	EINITTOKEN	
ELDB/ELDU	SGX1	PAGEINFO and linked structures, PCMD	EPCPAGE	VAPAGE	
ELDBC/ELDUC	OVERSUB	PAGEINFO and linked structures	EPCPAGE	VAPAGE	
EMODPE	SGX2	SECINFO	EPCPAGE		
EMODPR	SGX2	SECINFO	EPCPAGE		SECS
EMODT	SGX2	SECINFO	EPCPAGE		SECS
EPA	SGX1	EPCADDR			
ERDINFO	OVERSUB	RDINFO	EPCPAGE		
EREMOVE	SGX1	EPCPAGE			SECS
EREPORT	SGX1	TARGETINFO	REPORTDATA	OUTPUTDATA	SECS
ERESUME	SGX1	TCS and linked SSA			SECS
ESETCONTEXT	OVERSUB		SECS	ContextValue	
ETRACK	SGX1	EPCPAGE			
ETRACKC	OVERSUB		EPCPAGE		
EWB	SGX1	PAGEINFO and linked structures, PCMD	EPCPAGE	VAPAGE	SECS
Asynchronous Enclave Exit*					SECS, TCS, SSA
*Details of Asynchronous Enclave Exit (AEX) is described in Section 37.4					

35.6 INTEL® SGX DATA STRUCTURES OVERVIEW

Enclave operation is managed via a collection of data structures. Many of the top-level data structures contain sub-structures. The top-level data structures relate to parameters that may be used in enclave setup/maintenance, by Intel SGX instructions, or AEX event. The top-level data structures are:

- SGX Enclave Control Structure (SECS)
- Thread Control Structure (TCS)
- State Save Area (SSA)
- Page Information (PAGEINFO)
- Security Information (SECINFO)
- Paging Crypto MetaData (PCMD)
- Enclave Signature Structure (SIGSTRUCT)
- EINIT Token Structure (EINITTOKEN)
- Report Structure (REPORT)
- Report Target Info (TARGETINFO)
- Key Request (KEYREQUEST)
- Version Array (VA)
- Enclave Page Cache Map (EPCM)
- Read Info (RDINFO)

Details of the top-level data structures and associated sub-structures are listed in Section 35.7 through Section 35.20.

35.7 SGX ENCLAVE CONTROL STRUCTURE (SECS)

The SECS data structure requires 4K-Bytes alignment.

Table 35-2. Layout of SGX Enclave Control Structure (SECS)

Field	OFFSET (Bytes)	Size (Bytes)	Description
SIZE	0	8	Size of enclave in bytes; must be power of 2.
BASEADDR	8	8	Enclave Base Linear Address must be naturally aligned to size.
SSAFRAMESIZE	16	4	Size of one SSA frame in pages, including XSAVE, pad, GPR, and MISC (if CPUID.(EAX=12H, ECX=0):.EBX != 0).
MISCSELECT	20	4	Bit vector specifying which extended features are saved to the MISC region (see Section 35.7.2) of the SSA frame when an AEX occurs.
CET_LEG_BITMAP_OFFSET	24	8	Page aligned offset of legacy code page bitmap from enclave base. Software is expected to program this offset such that the entire bitmap resides in the ELRANGE when legacy compatibility mode for indirect branch tracking is enabled. However this is not enforced by the hardware. This field exists when CPUID.(EAX=7, ECX=0):EDX.CET_IBT[bit 20] is enumerated as 1, else it is reserved.
CET_ATTRIBUTES	32	1	CET feature attributes of the enclave; see Table 35-5. This field exists when CPUID.(EAX=12,ECX=1):EAX[6] is enumerated as 1, else it is reserved.
RESERVED	33	15	
ATTRIBUTES	48	16	Attributes of the Enclave, see Table 35-3.
MRENCLAVE	64	32	Measurement Register of enclave build process. See SIGSTRUCT for format.
RESERVED	96	32	
MRSIGNER	128	32	Measurement Register extended with the public key that verified the enclave. See SIGSTRUCT for format.
RESERVED	160	32	
CONFIGID	192	64	Post EINIT configuration identity.
ISVPRODID	256	2	Product ID of enclave.
ISVSVN	258	2	Security version number (SVN) of the enclave.
CONFIGSVN	260	2	Post EINIT configuration security version number (SVN).
RESERVED	262	3834	The RESERVED field consists of the following: ▪ EID: An 8 byte Enclave Identifier. Its location is implementation specific. ▪ PAD: A 352 bytes padding pattern from the Signature (used for key derivation strings). It's location is implementation specific. ▪ VIRTCHILDCNT: An 8 byte Count of virtual children that have been paged out by a VMM. Its location is implementation specific. ▪ ENCLAVECONTEXT: An 8 byte Enclave context pointer. Its location is implementation specific. ▪ ISVFAMILYID: A 16 byte value assigned to identify the family of products the enclave belongs to. ▪ ISVEXTPRODID: A 16 byte value assigned to identify the product identity of the enclave. ▪ The remaining 3226 bytes are reserved area. The entire 3834 byte field must be cleared prior to executing ECREATE.

35.7.1 ATTRIBUTES

The ATTRIBUTES data structure is comprised of bit-granular fields that are used in the SECS, the REPORT and the KEYREQUEST structures. CPUID.(EAX=12H, ECX=1) enumerates a bitmap of permitted 1-setting of bits in ATTRIBUTES.

Table 35-3. Layout of ATTRIBUTES Structure

Field	Bit Position	Description
INIT	0	This bit indicates if the enclave has been initialized by EINIT. It must be cleared when loaded as part of ECREATE. For EREPORT instruction, TARGET_INFO.ATTRIBUTES[EINIT] must always be 1 to match the state after EINIT has initialized the enclave.
DEBUG	1	If 1, the enclave permit debugger to read and write enclave data using EDBGRD and EDBGWR.
MODE64BIT	2	Enclave runs in 64-bit mode.
RESERVED	3	Must be Zero.
PROVISIONKEY	4	Provisioning Key is available from EGETKEY.
EINITTOKEN_KEY	5	EINIT token key is available from EGETKEY.
CET	6	Enable CET attributes. When CPUID.(EAX=12H, ECX=1):EAX[6] is 0 this bit is reserved and must be 0.
KSS	7	Key Separation and Sharing Enabled.
RESERVED	63:8	Must be zero.
XFRM	127:64	XSAVE Feature Request Mask. See Section 39.7.

35.7.2 SECS.MISCSELECT Field

CPUID.(EAX=12H, ECX=0):EBX[31:0] enumerates which extended information that the processor can save into the MISC region of SSA when an AEX occurs. An enclave writer can specify via SIGSTRUCT how to set the SECS.MISCSELECT field. The bit vector of MISCSELECT selects which extended information is to be saved in the MISC region of the SSA frame when an AEX is generated. The bit vector definition of extended information is listed in Table 35-4.

If CPUID.(EAX=12H, ECX=0):EBX[31:0] = 0, SECS.MISCSELECT field must be all zeros.

The SECS.MISCSELECT field determines the size of MISC region of the SSA frame, see Section 35.9.2.

Table 35-4. Bit Vector Layout of MISCSELECT Field of Extended Information

Field	Bit Position	Description
EXINFO	0	Report information about page fault and general protection exception that occurred inside an enclave.
CPINFO	1	Report information about control protection exception that occurred inside an enclave. When CPUID.(EAX=12H, ECX=0):EBX[1] is 0, this bit is reserved.
Reserved	31:2	Reserved (0).

35.7.3 SECS.CET_ATTRIBUTES Field

The SECS.CET_ATTRIBUTES field can be used by the enclave writer to enable various CET attributes in an enclave. This field exists when CPUID.(EAX=12,ECX=1):EAX[6] is enumerated as 1. Bits 1:0 are defined when CPUID.(EAX=7, ECX=0):ECX.CET_SS is 1, and bits 5:2 are defined when CPUID.(EAX=7, ECX=0):EDX.CET_IBT is 1.

Table 35-5. Bit Vector Layout of CET_ATTRIBUTES Field of Extended Information

Field	Bit Position	Description
SH_STK_EN	0	When set to 1, enable shadow stacks.
WR_SHSTK_EN	1	When set to 1, enables the WRSS{D,Q}W instructions.
ENDBR_EN	2	When set to 1, enables indirect branch tracking.
LEG_IW_EN	3	Enable legacy compatibility treatment for indirect branch tracking.
NO_TRACK_EN	4	When set to 1, enables use of no-track prefix for indirect branch tracking.
SUPPRESS_DIS	5	When set to 1, disables suppression of CET indirect branch tracking on legacy compatibility.
Reserved	7:6	Reserved (0).

35.8 THREAD CONTROL STRUCTURE (TCS)

Each executing thread in the enclave is associated with a Thread Control Structure. It requires 4K-Bytes alignment.

Table 35-6. Layout of Thread Control Structure (TCS)

Field	OFFSET (Bytes)	Size (Bytes)	Description
STAGE	0	8	Enclave execution state of the thread controlled by this TCS. A value of 0 indicates that this TCS is available for enclave entry. A value of 1 indicates that a logical processor is currently executing an enclave in the context of this TCS.
FLAGS	8	8	The thread's execution flags (see Section 35.8.1).
OSSA	16	8	Offset of the base of the State Save Area stack, relative to the enclave base. Must be page aligned.
CSSA	24	4	Current slot index of an SSA frame, cleared by EADD and EACCEPT.
NSSA	28	4	Number of available slots for SSA frames.
OENTRY	32	8	Offset in enclave to which control is transferred on EENTER relative to the base of the enclave.
AEP	40	8	The value of the Asynchronous Exit Pointer that was saved at EENTER time.
OFSBASE	48	8	Offset to add to the base address of the enclave for producing the base address of FS segment inside the enclave. Must be page aligned.
OGSBASE	56	8	Offset to add to the base address of the enclave for producing the base address of GS segment inside the enclave. Must be page aligned.
FSLIMIT	64	4	Size to become the new FS limit in 32-bit mode.
GSLIMIT	68	4	Size to become the new GS limit in 32-bit mode.
OCETSSA	72	8	When CPUID.(EAX=12H, ECX=1):EAX[6] is 1, this field provides the offset of the CET state save area from enclave base. When CPUID.(EAX=12H, ECX=1):EAX[6] is 0, this field is reserved and must be 0.
PREVSSP	80	8	When CPUID.(EAX=07H, ECX=00h):ECX[CET_SS] is 1, this field records the SSP at the time of AEX or EEXIT; used to setup SSP on entry. When CPUID.(EAX=07H, ECX=00h):ECX[CET_SS] is 0, this field is reserved and must be 0.
RESERVED	72	4024	Must be zero.

35.8.1 TCS.FLAGS

Table 35-7. Layout of TCS.FLAGS Field

Field	Bit Position	Description
DBGOPTIN	0	If set, allows debugging features (single-stepping, breakpoints, etc.) to be enabled and active while executing in the enclave on this TCS. Hardware clears this bit on EADD. A debugger may later modify it if the enclave's ATTRIBUTES.DEBUG is set.
RESERVED	63:1	

35.8.2 State Save Area Offset (OSSA)

The OSSA points to a stack of State Save Area (SSA) frames (see Section 35.9) used to save the processor state when an interrupt or exception occurs while executing in the enclave.

35.8.3 Current State Save Area Frame (CSSA)

CSSA is the index of the current SSA frame that will be used by the processor to determine where to save the processor state on an interrupt or exception that occurs while executing in the enclave. It is an index into the array of frames addressed by OSSA. CSSA is incremented on an AEX and decremented on an ERESUME.

35.8.4 Number of State Save Area Frames (NSSA)

NSSA specifies the number of SSA frames available for this TCS. There must be at least one available SSA frame when EENTER-ing the enclave or the EENTER will fail.

35.9 STATE SAVE AREA (SSA) FRAME

When an AEX occurs while running in an enclave, the architectural state is saved in the thread's current SSA frame, which is pointed to by TCS.CSSA. An SSA frame must be page aligned, and contains the following regions:

- The XSAVE region starts at the base of the SSA frame, this region contains extended feature register state in an XSAVE/FXSAVE-compatible non-compacted format.
- A Pad region: software may choose to maintain a pad region separating the XSAVE region and the MISC region. Software choose the size of the pad region according to the sizes of the MISC and GPRSGX regions.
- The GPRSGX region. The GPRSGX region is the last region of an SSA frame (see Table 35-8). This is used to hold the processor general purpose registers (RAX … R15), the RIP, the outside RSP and RBP, RFLAGS, and the AEX information.
- The MISC region (If CPUIDEAX=12H, ECX=0):EBX[31:0] != 0). The MISC region is adjacent to the GRPSGX region, and may contain zero or more components of extended information that would be saved when an AEX occurs. If the MISC region is absent, the region between the GPRSGX and XSAVE regions is the pad region that software can use. If the MISC region is present, the region between the MISC and XSAVE regions is the pad region that software can use. See additional details in Section 35.9.2.

Table 35-8. Top-to-Bottom Layout of an SSA Frame

Region	Offset (Byte)	Size (Bytes)	Description
XSAVE	0	Calculate using CPUID leaf 0DH information	The size of XSAVE region in SSA is derived from the enclave's support of the collection of processor extended states that would be managed by XSAVE. The enablement of those processor extended state components in conjunction with CPUID leaf 0DH information determines the XSAVE region size in SSA.
Pad	End of XSAVE region	Chosen by enclave writer	Ensure the end of GPRSGX region is aligned to the end of a 4KB page.

Table 35-8. Top-to-Bottom Layout of an SSA Frame

Region	Offset (Byte)	Size (Bytes)	Description
MISC	base of GPRSGX – sizeof(MISC)	Calculate from highest set bit of SECS.MISCSELECT	See Section 35.9.2.
GPRSGX	SSAFRAMESIZE – 176	176	See Table 35-9 for layout of the GPRSGX region.

35.9.1 GPRSGX Region

The layout of the GPRSGX region is shown in Table 35-9.

Table 35-9. Layout of GPRSGX Portion of the State Save Area

Field	OFFSET (Bytes)	Size (Bytes)	Description
RAX	0	8	
RCX	8	8	
RDX	16	8	
RBX	24	8	
RSP	32	8	
RBP	40	8	
RSI	48	8	
RDI	56	8	
R8	64	8	
R9	72	8	
R10	80	8	
R11	88	8	
R12	96	8	
R13	104	8	
R14	112	8	
R15	120	8	
RFLAGS	128	8	Flag register.
RIP	136	8	Instruction pointer.
URSP	144	8	Non-Enclave (outside) stack pointer. Saved by EENTER, restored on AEX.
URBP	152	8	Non-Enclave (outside) RBP pointer. Saved by EENTER, restored on AEX.
EXITINFO	160	4	Contains information about exceptions that cause AEXs, which might be needed by enclave software (see Section 35.9.1.1).
RESERVED	164	4	
FSBASE	168	8	FS BASE.
GSBASE	176	8	GS BASE.

35.9.1.1 EXITINFO

EXITINFO contains the information used to report exit reasons to software inside the enclave. It is a 4 byte field laid out as in Table 35-10. The VALID bit is set only for the exceptions conditions which are reported inside an enclave. See Table 35-11 for which exceptions are reported inside the enclave. If the exception condition is not one reported inside the enclave then VECTOR and EXIT_TYPE are cleared.

When a higher priority event, such as SMI, and a pending debug exception occur at the same time when executing inside an enclave, the higher priority event has precedence. As an example for an SMI, the SSA exit info is zero. The debug exception will be delivered upon return from the SMI. In such cases, the EXITINFO field will not contain the information of a debug exception.

Table 35-10. Layout of EXITINFO Field

Field	Bit Position	Description
VECTOR	7:0	Exception number of exceptions reported inside enclave.
EXIT_TYPE	10:8	011b: Hardware exceptions. 110b: Software exceptions. Other values: Reserved.
RESERVED	30:11	Reserved as zero.
VALID	31	0: unsupported exceptions. 1: Supported exceptions. Includes two categories: • Unconditionally supported exceptions: #DE, #DB, #BP, #BR, #UD, #MF, #AC, #XM. • Conditionally supported exception: — #PF, #GP if SECS.MISCSELECT.EXINFO = 1. — #CP if SECS.MISCSELECT.CPINFO=1.

35.9.1.2 VECTOR Field Definition

Table 35-11 contains the VECTOR field. This field contains information about some exceptions which occur inside the enclave. These vector values are the same as the values that would be used when vectoring into regular exception handlers. All values not shown are not reported inside an enclave.

Table 35-11. Exception Vectors

Name	Vector #	Description
#DE	0	Divider exception.
#DB	1	Debug exception.
#BP	3	Breakpoint exception.
#BR	5	Bound range exceeded exception.
#UD	6	Invalid opcode exception.
#GP	13	General protection exception. Only reported if SECS.MISCSELECT.EXINFO = 1.
#PF	14	Page fault exception. Only reported if SECS.MISCSELECT.EXINFO = 1.
#MF	16	x87 FPU floating-point error.
#AC	17	Alignment check exceptions.
#XM	19	SIMD floating-point exceptions.
#CP	21	Control protection exception. Only reported if SECS.MISCSELECT.CPINFO=1.

35.9.2 MISC Region

The layout of the MISC region is shown in Table 35-12. The number of components that the processor supports in the MISC region corresponds to the bits of CPUID.(EAX=12H, ECX=0):EBX[31:0] set to 1. Each set bit in CPUID.(EAX=12H, ECX=0):EBX[31:0] has a defined size for the corresponding component, as shown in Table 35-12. Enclave writers needs to do the following:

- Decide which MISC region components will be supported for the enclave.
- Allocate an SSA frame large enough to hold the components chosen above.

- Instruct each enclave builder software to set the appropriate bits in SECS.MISCSELECT.

The first component, EXINFO, starts next to the GPRSGX region. Additional components in the MISC region grow in ascending order within the MISC region towards the XSAVE region.

The size of the MISC region is calculated as follows:

- If CPUID.(EAX=12H, ECX=0):EBX[31:0] = 0, MISC region is not supported.
- If CPUID.(EAX=12H, ECX=0):EBX[31:0] != 0, the size of MISC region is derived from sum of the highest bit set in SECS.MISCSELECT and the size of the MISC component corresponding to that bit. Offset and size information of currently defined MISC components are listed in Table 35-12. For example, if the highest bit set in SECS.MISCSELECT is bit 0, the MISC region offset is OFFSET(GPRSGX)-16 and size is 16 bytes.
- The processor saves a MISC component i in the MISC region if and only if SECS.MISCSELECT[i] is 1.

Table 35-12. Layout of MISC region of the State Save Area

MISC Components	OFFSET (Bytes)	Size (Bytes)	Description
EXINFO	Offset(GPRSGX) -16	16	If CPUID.(EAX=12H, ECX=0):EBX[0] = 1, exception information on #GP or #PF that occurred inside an enclave can be written to the EXINFO structure if specified by SECS.MISCSELECT[0] = 1. If CPUID.(EAX=12H, ECX=0):EBX[1] = 1, exception information on #CP that occurred inside an enclave can be written to the EXINFO structure if specified by SECS.MISCSELECT[1] = 1.
Future Extension	Below EXINFO	TBD	Reserved. (Zero size if CPUID.(EAX=12H, ECX=0):EBX[31:1] =0).

35.9.2.1 EXINFO Structure

Table 35-13 contains the layout of the EXINFO structure that provides additional information.

Table 35-13. Layout of EXINFO Structure

Field	OFFSET (Bytes)	Size (Bytes)	Description
MADDR	0	8	If #PF: contains the page fault linear address that caused a page fault. If #GP: the field is cleared. If #CP: the field is cleared.
ERRCD	8	4	Exception error code for either #GP or #PF.
RESERVED	12	4	

35.9.2.2 Page Fault Error Code

Table 35-14 contains page fault error code that may be reported in EXINFO.ERRCD.

Table 35-14. Page Fault Error Code

Name	Bit Position	Description
P	0	Same as non-SGX page fault exception P flag.
W/R	1	Same as non-SGX page fault exception W/R flag.
U/S[1]	2	Always set to 1 (user mode reference).
RSVD	3	Same as non-SGX page fault exception RSVD flag.
I/D	4	Same as non-SGX page fault exception I/D flag.
PK	5	Protection Key induced fault.
RSVD	14:6	Reserved.
SGX	15	EPCM induced fault.
RSVD	31:5	Reserved.

NOTES:

1. Page faults incident to enclave mode that report U/S=0 are not reported in EXINFO.

35.10 CET STATE SAVE AREA FRAME

The CET state save area consists of an array of CET state save frames. The number of CET state save frames is equal to the TCS.NSSA. The current CET SSA frame is indicated by TCS.CSSA. The offset of the CET state save area is specified by TCS.OCETSSA.

Table 35-15. Layout of CET State Save Area Frame

Field	Offset (Bytes)	Size (Bytes)	Description
SSP	0	8	Shadow Stack Pointer. This field is reserved when CPUID.(EAX=7, ECX=0):ECX[CET_SS] is 0.
IB_TRACK_STATE	8	8	Indirect branch tracker state: Bit 0: SUPPRESS – suppressed(1), tracking(0) Bit 1: TRACKER - IDLE (0), WAIT_FOR_ENDBRANCH (1) Bits 63:2 – Reserved This field is reserved when CPUID.(EAX=7, ECX=0):EDX[CET_IBT] is 0.

35.11 PAGE INFORMATION (PAGEINFO)

PAGEINFO is an architectural data structure that is used as a parameter to the EPC-management instructions. It requires 32-Byte alignment.

Table 35-16. Layout of PAGEINFO Data Structure

Field	OFFSET (Bytes)	Size (Bytes)	Description
LINADDR	0	8	Enclave linear address.
SRCPGE	8	8	Effective address of the page where contents are located.
SECINFO/PCMD	16	8	Effective address of the SECINFO or PCMD (for ELDU, ELDB, EWB) structure for the page.
SECS	24	8	Effective address of EPC slot that currently contains the SECS.

35.12 SECURITY INFORMATION (SECINFO)

The SECINFO data structure holds meta-data about an enclave page.

Table 35-17. Layout of SECINFO Data Structure

Field	OFFSET (Bytes)	Size (Bytes)	Description
FLAGS	0	8	Flags describing the state of the enclave page.
RESERVED	8	56	Must be zero.

35.12.1 SECINFO.FLAGS

The SECINFO.FLAGS are a set of fields describing the properties of an enclave page.

Table 35-18. Layout of SECINFO.FLAGS Field

Field	Bit Position	Description
R	0	If 1 indicates that the page can be read from inside the enclave; otherwise the page cannot be read from inside the enclave.
W	1	If 1 indicates that the page can be written from inside the enclave; otherwise the page cannot be written from inside the enclave.
X	2	If 1 indicates that the page can be executed from inside the enclave; otherwise the page cannot be executed from inside the enclave.
PENDING	3	If 1 indicates that the page is in the PENDING state; otherwise the page is not in the PENDING state.
MODIFIED	4	If 1 indicates that the page is in the MODIFIED state; otherwise the page is not in the MODIFIED state.
PR	5	If 1 indicates that a permission restriction operation on the page is in progress, otherwise a permission restriction operation is not in progress.
RESERVED	7:6	Must be zero.
PAGE_TYPE	15:8	The type of page that the SECINFO is associated with.
RESERVED	63:16	Must be zero.

35.12.2 PAGE_TYPE Field Definition

The SECINFO flags and EPC flags contain bits indicating the type of page.

Table 35-19. Supported PAGE_TYPE

TYPE	Value	Description
PT_SECS	0	Page is an SECS.
PT_TCS	1	Page is a TCS.
PT_REG	2	Page is a regular page.
PT_VA	3	Page is a Version Array.
PT_TRIM	4	Page is in trimmed state.
PT_SS_FIRST	5	When CPUID.(EAX=12H, ECX=1):EAX[6] is 1, Page is first page of a shadow stack. When CPUID.(EAX=12H, ECX=1):EAX[6] is 0, this value is reserved.
PT_SS_REST	6	When CPUID.(EAX=12H, ECX=1):EAX[6] is 1, Page is not first page of a shadow stack. When CPUID.(EAX=12H, ECX=1):EAX[6] is 0, this value is reserved.
	All others	Reserved.

35.13 PAGING CRYPTO METADATA (PCMD)

The PCMD structure is used to keep track of crypto meta-data associated with a paged-out page. Combined with PAGEINFO, it provides enough information for the processor to verify, decrypt, and reload a paged-out EPC page. The size of the PCMD structure (128 bytes) is architectural.

EWB calculates the Message Authentication Code (MAC) value and writes out the PCMD. ELDB/U reads the fields and checks the MAC.

The format of PCMD is as follows:

Table 35-20. Layout of PCMD Data Structure

Field	OFFSET (Bytes)	Size (Bytes)	Description
SECINFO	0	64	Flags describing the state of the enclave page; R/W by software.
ENCLAVEID	64	8	Enclave Identifier used to establish a cryptographic binding between paged-out page and the enclave.
RESERVED	72	40	Must be zero.
MAC	112	16	Message Authentication Code for the page, page meta-data and reserved field.

35.14 ENCLAVE SIGNATURE STRUCTURE (SIGSTRUCT)

SIGSTRUCT is a structure created and signed by the enclave developer that contains information about the enclave. SIGSTRUCT is processed by the EINIT leaf function to verify that the enclave was properly built.

SIGSTRUCT includes ENCLAVEHASH as SHA256 digest, as defined in FIPS PUB 180-4. The digests are byte strings of length 32. Each of the 8 HASH dwords is stored in little-endian order.

SIGSTRUCT includes four 3072-bit integers (MODULUS, SIGNATURE, Q1, Q2). Each such integer is represented as a byte strings of length 384, with the most significant byte at the position "offset + 383", and the least significant byte at position "offset".

The (3072-bit integer) SIGNATURE should be an RSA signature, where: a) the RSA modulus (MODULUS) is a 3072-bit integer; b) the public exponent is set to 3; c) the signing procedure uses the EMSA-PKCS1-v1.5 format with DER encoding of the "DigestInfo" value as specified in of PKCS#1 v2.1/RFC 3447.

The 3072-bit integers Q1 and Q2 are defined by:

q1 = floor(Signature^2 / Modulus);

q2 = floor((Signature^3 - q1 * Signature * Modulus) / Modulus);

SIGSTRUCT must be page aligned

In column 5 of Table 35-21, 'Y' indicates that this field should be included in the signature generated by the developer.

Table 35-21. Layout of Enclave Signature Structure (SIGSTRUCT)

Field	OFFSET (Bytes)	Size (Bytes)	Description	Signed
HEADER	0	16	Must be byte stream 06000000E10000000000010000000000H	Y
VENDOR	16	4	Intel Enclave: 00008086H Non-Intel Enclave: 00000000H	Y
DATE	20	4	Build date is yyyymmdd in hex: yyyy=4 digit year, mm=1-12, dd=1-31	Y
HEADER2	24	16	Must be byte stream 01010000600000006000000001000000H	Y
SWDEFINED	40	4	Available for software use.	Y
RESERVED	44	84	Must be zero.	Y
MODULUS	128	384	Module Public Key (keylength=3072 bits).	N
EXPONENT	512	4	RSA Exponent = 3.	N
SIGNATURE	516	384	Signature over Header and Body.	N
MISCSELECT*	900	4	Bit vector specifying Extended SSA frame feature set to be used.	Y
MISCMASK*	904	4	Bit vector mask of MISCSELECT to enforce.	Y

Table 35-21. Layout of Enclave Signature Structure (SIGSTRUCT)

Field	OFFSET (Bytes)	Size (Bytes)	Description	Signed
CET_ATTRIBUTES	908	1	When CPUID.(EAX=12H, ECX=1):EAX[6] is 1, this field provides the Enclave CET attributes that must be set. When CPUID.(EAX=12H, ECX=1):EAX[6] is 0, this field is reserved and must be 0.	Y
CET_ATTRIBUTES_MASK	909	1	When CPUID.(EAX=12H, ECX=1):EAX[6] is 1, this field provides the Mask of CET attributes to enforce. When CPUID.(EAX=12H, ECX=1):EAX[6] is 0, this field is reserved and must be 0.	Y
RESERVED	910	2	Must be zero.	Y
ISVFAMILYID	912	16	ISV assigned Product Family ID.	Y
ATTRIBUTES	928	16	Enclave Attributes that must be set.	Y
ATTRIBUTEMASK	944	16	Mask of Attributes to enforce.	Y
ENCLAVEHASH	960	32	MRENCLAVE of enclave this structure applies to.	Y
RESERVED	992	16	Must be zero.	Y
ISVEXTPRODID	1008	16	ISV assigned extended Product ID.	Y
ISVPRODID	1024	2	ISV assigned Product ID.	Y
ISVSVN	1026	2	ISV assigned SVN (security version number).	Y
RESERVED	1028	12	Must be zero.	N
Q1	1040	384	Q1 value for RSA Signature Verification.	N
Q2	1424	384	Q2 value for RSA Signature Verification.	N
* If CPUID.(EAX=12H, ECX=0):EBX[31:0] = 0, MISCSELECT must be 0. If CPUID.(EAX=12H, ECX=0):EBX[31:0] !=0, enclave writers must specify MISCSELECT such that each cleared bit in MISCMASK must also specify the corresponding bit as 0 in MISCSELECT.				

35.15 EINIT TOKEN STRUCTURE (EINITTOKEN)

The EINIT token is used by EINIT to verify that the enclave is permitted to launch. EINIT token is generated by an enclave in possession of the EINITTOKEN key (the Launch Enclave).

EINIT token must be 512-Byte aligned.

Table 35-22. Layout of EINIT Token (EINITTOKEN)

Field	OFFSET (Bytes)	Size (Bytes)	MACed	Description
Valid	0	4	Y	Bit 0: 1: Valid; 0: Invalid. All other bits reserved.
RESERVED	4	44	Y	Must be zero.
ATTRIBUTES	48	16	Y	ATTRIBUTES of the Enclave.
MRENCLAVE	64	32	Y	MRENCLAVE of the Enclave.
RESERVED	96	32	Y	Reserved.
MRSIGNER	128	32	Y	MRSIGNER of the Enclave.
RESERVED	160	32	Y	Reserved.
CPUSVNLE	192	16	N	Launch Enclave's CPUSVN.
ISVPRODIDLE	208	02	N	Launch Enclave's ISVPRODID.
ISVSVNLE	210	02	N	Launch Enclave's ISVSVN.
CET_MASKED_ATTRIBUTES_LE	212	1	N	When CPUID.(EAX=12H, ECX=1):EAX[6] is 1, this field provides the Launch enclaves masked CET attributes. This should be set to LE's CET_ATTRIBUTES masked with CET_ATTTRIBUTES_MASK of the LE's KEYREQUEST. When CPUID.(EAX=12H, ECX=1):EAX[6] is 0, this field is reserved.
RESERVED	213	23	N	Reserved.
MASKEDMISCSELECTLE	236	4		Launch Enclave's MASKEDMISCSELECT: set by the LE to the resolved MISCSELECT value, used by EGETKEY (after applying KEYREQUEST's masking).
MASKEDATTRIBUTESLE	240	16	N	Launch Enclave's MASKEDATTRIBUTES: This should be set to the LE's ATTRIBUTES masked with ATTRIBUTEMASK of the LE's KEYREQUEST.
KEYID	256	32	N	Value for key wear-out protection.
MAC	288	16	N	Message Authentication Code on EINITTOKEN using EINITTOKEN_KEY.

35.16 REPORT (REPORT)

The REPORT structure is the output of the EREPORT instruction, and must be 512-Byte aligned.

Table 35-23. Layout of REPORT

Field	OFFSET (Bytes)	Size (Bytes)	Description
CPUSVN	0	16	The security version number of the processor.
MISCSELECT	16	4	Bit vector specifying which extended features are saved to the MISC region of the SSA frame when an AEX occurs.
CET_ATTRIBUTES	20	1	When CPUID.(EAX=12H, ECX=1):EAX[6] is 1, this field reports the CET_ATTRIBUTES of the Enclave. When CPUID.(EAX=12H, ECX=1):EAX[6] is 0, this field is reserved and must be 0.
RESERVED	21	11	Zero.
ISVEXTNPRODID	32	16	The value of SECS.ISVEXTPRODID.
ATTRIBUTES	48	16	ATTRIBUTES of the Enclave. See Section 35.7.1.
MRENCLAVE	64	32	The value of SECS.MRENCLAVE.
RESERVED	96	32	Zero.
MRSIGNER	128	32	The value of SECS.MRSIGNER.
RESERVED	160	32	Zero.

Table 35-23. Layout of REPORT

Field	OFFSET (Bytes)	Size (Bytes)	Description
CONFIGID	192	64	Value provided by SW to identify enclave's post EINIT configuration.
ISVPRODID	256	2	Product ID of enclave.
ISVSVN	258	2	Security version number (SVN) of the enclave.
CONFIGSVN	260	2	Value provided by SW to indicate expected SVN of enclave's post EINIT configuration.
RESERVED	262	42	Zero.
ISVFAMILYID	304	16	The value of SECS.ISVFAMILYID.
REPORTDATA	320	64	Data provided by the user and protected by the REPORT's MAC, see Section 35.16.1.
KEYID	384	32	Value for key wear-out protection.
MAC	416	16	Message Authentication Code on the report using report key.

35.16.1 REPORTDATA

REPORTDATA is a 64-Byte data structure that is provided by the enclave and included in the REPORT. It can be used to securely pass information from the enclave to the target enclave.

35.17 REPORT TARGET INFO (TARGETINFO)

This structure is an input parameter to the EREPORT leaf function. The address of TARGETINFO is specified as an effective address in RBX. It is used to identify the target enclave which will be able to cryptographically verify the REPORT structure returned by EREPORT. TARGETINFO must be 512-Byte aligned.

Table 35-24. Layout of TARGETINFO Data Structure

Field	OFFSET (Bytes)	Size (Bytes)	Description
MEASUREMENT	0	32	The MRENCLAVE of the target enclave.
ATTRIBUTES	32	16	The ATTRIBUTES field of the target enclave.
CET_ATTRIBUTES	48	1	When CPUID.(EAX=12H, ECX=1):EAX[6] is 1, this field provides the CET_ATTRIBUTES field of the target enclave. When CPUID.(EAX=12H, ECX=1):EAX[6] is 0, this field is reserved.
RESERVED	49	1	Must be zero.
CONFIGSVN	50	2	CONFIGSVN of the target enclave.
MISCSELECT	52	4	The MISCSELECT of the target enclave.
RESERVED	56	8	Must be zero.
CONFIGID	64	64	CONFIGID of target enclave.
RESERVED	128	384	Must be zero.

35.18 KEY REQUEST (KEYREQUEST)

This structure is an input parameter to the EGETKEY leaf function. It is passed in as an effective address in RBX and must be 512-Byte aligned. It is used for selecting the appropriate key and any additional parameters required in the derivation of that key.

Table 35-25. Layout of KEYREQUEST Data Structure

Field	OFFSET (Bytes)	Size (Bytes)	Description
KEYNAME	0	2	Identifies the Key Required.
KEYPOLICY	2	2	Identifies which inputs are required to be used in the key derivation.
ISVSVN	4	2	The ISV security version number that will be used in the key derivation.
CET_ATTRIBUTES_MASK	6	1	When CPUID.(EAX=12H, ECX=1):EAX[6] is 1, this field provides a mask that defines which CET_ATTRIBUTES bits will be included in key derivation. When CPUID.(EAX=12H, ECX=1):EAX[6] is 0, then this field is reserved and must be 0.
RESERVED	7	1	Must be zero.
CPUSVN	8	16	The security version number of the processor used in the key derivation.
ATTRIBUTEMASK	24	16	A mask defining which ATTRIBUTES bits will be included in key derivation.
KEYID	40	32	Value for key wear-out protection.
MISCMASK	72	4	A mask defining which MISCSELECT bits will be included in key derivation.
CONFIGSVN	76	2	Identifies which enclave Configuration's Security Version should be used in key derivation.
RESERVED	78	434	

35.18.1 KEY REQUEST KeyNames

Table 35-26. Supported KEYName Values

Key Name	Value	Description
EINITTOKEN_KEY	0	EINIT_TOKEN key
PROVISION_KEY	1	Provisioning Key
PROVISION_SEAL_KEY	2	Provisioning Seal Key
REPORT_KEY	3	Report Key
SEAL_KEY	4	Seal Key
	All others	Reserved

35.18.2 Key Request Policy Structure

Table 35-27. Layout of KEYPOLICY Field

Field	Bit Position	Description
MRENCLAVE	0	If 1, derive key using the enclave's MRENCLAVE measurement register.
MRSIGNER	1	If 1, derive key using the enclave's MRSIGNER measurement register.
NOISVPRODID	2	If 1, derive key WITHOUT using the enclave' ISVPRODID value.
CONFIGID	3	If 1, derive key using the enclave's CONFIGID value.
ISVFAMILYID	4	If 1, derive key using the enclave ISVFAMILYID value.
ISVEXTPRODID	5	If 1, derive key using enclave's ISVEXTPRODID value.
RESERVED	15:6	Must be zero.

35.19 VERSION ARRAY (VA)

In order to securely store the versions of evicted EPC pages, Intel SGX defines a special EPC page type called a Version Array (VA). Each VA page contains 512 slots, each of which can contain an 8-byte version number for a page evicted from the EPC. When an EPC page is evicted, software chooses an empty slot in a VA page; this slot receives the unique version number of the page being evicted. When the EPC page is reloaded, there must be a VA slot that must hold the version of the page. If the page is successfully reloaded, the version in the VA slot is cleared.

VA pages can be evicted, just like any other EPC page. When evicting a VA page, a version slot in some other VA page must be used to hold the version for the VA being evicted. A Version Array Page must be 4K-Bytes aligned.

Table 35-28. Layout of Version Array Data Structure

Field	OFFSET (Bytes)	Size (Bytes)	Description
Slot 0	0	8	Version Slot 0
Slot 1	8	8	Version Slot 1
…			
Slot 511	4088	8	Version Slot 511

35.20 ENCLAVE PAGE CACHE MAP (EPCM)

EPCM is a secure structure used by the processor to track the contents of the EPC. The EPCM holds exactly one entry for each page that is currently loaded into the EPC. EPCM is not accessible by software, and the layout of EPCM fields is implementation specific.

Table 35-29. Content of an Enclave Page Cache Map Entry

Field	Description
VALID	Indicates whether the EPCM entry is valid.
R	Read access; indicates whether enclave accesses for reads are allowed from the EPC page referenced by this entry.
W	Write access; indicates whether enclave accesses for writes are allowed to the EPC page referenced by this entry.
X	Execute access; indicates whether enclave accesses for instruction fetches are allowed from the EPC page referenced by this entry.
PT	EPCM page type (PT_SECS, PT_TCS, PT_REG, PT_VA, PT_TRIM, PT_SS_FIRST, PT_SS_REST).
ENCLAVESECS	SECS identifier of the enclave to which the EPC page belongs.
ENCLAVEADDRESS	Linear enclave address of the EPC page.
BLOCKED	Indicates whether the EPC page is in the blocked state.
PENDING	Indicates whether the EPC page is in the pending state.
MODIFIED	Indicates whether the EPC page is in the modified state.
PR	Indicates whether the EPC page is in a permission restriction state.

35.21 READ INFO (RDINFO)

The RDINFO structure contains status information about an EPC page. It must be aligned to 32-Bytes.

Table 35-30. Layout of RDINFO Structure

Field	OFFSET (Bytes)	Size (Bytes)	Description
STATUS	0	8	Page status information.
FLAGS	8	8	EPCM state of the page.
ENCLAVECONTEXT	16	8	Context pointer describing the page's parent location.

35.21.1 RDINFO Status Structure

Table 35-31. Layout of RDINFO STATUS Structure

Field	Bit Position	Description
CHILDPRESENT	0	Indicates that the page has one or more child pages present (always zero for non-SECS pages). In VMX non-root operation includes the presence of virtual children.
VIRTCHLDPRESENT	1	Indicates that the page has one or more virtual child pages present (always zero for non-SECS pages). In VMX non-root operation this value is always zero.
RESERVED	63:2	

35.21.2 RDINFO Flags Structure

Table 35-32. Layout of RDINFO FLAGS Structure

Field	Bit Position	Description
R	0	Read access; indicates whether enclave accesses for reads are allowed from the EPC page referenced by this entry.
W	1	Write access; indicates whether enclave accesses for writes are allowed to the EPC page referenced by this entry.
X	2	Execute access; indicates whether enclave accesses for instruction fetches are allowed from the EPC page referenced by this entry.
PENDING	3	Indicates whether the EPC page is in the pending state.
MODIFIED	4	Indicates whether the EPC page is in the modified state.
PR	5	Indicates whether the EPC page is in a permission restriction state.
RESERVED	7:6	
PAGE_TYPE	15:8	Indicates the page type of the EPC page.
RESERVED	62:16	
BLOCKED	63	Indicates whether the EPC page is in the blocked state.

CHAPTER 36
ENCLAVE OPERATION

The following aspects of enclave operation are described in this chapter:

- Enclave creation: Includes loading code and data from outside of enclave into the EPC and establishing the enclave entity.
- Adding pages and measuring the enclave.
- Initialization of an enclave: Finalizes the cryptographic log and establishes the enclave identity and sealing identity.
- Enclave entry and exiting including:
  - — Controlled entry and exit.
  - — Asynchronous Enclave Exit (AEX) and resuming execution after an AEX.

36.1 CONSTRUCTING AN ENCLAVE

Figure 36-1 illustrates a typical Enclave memory layout.

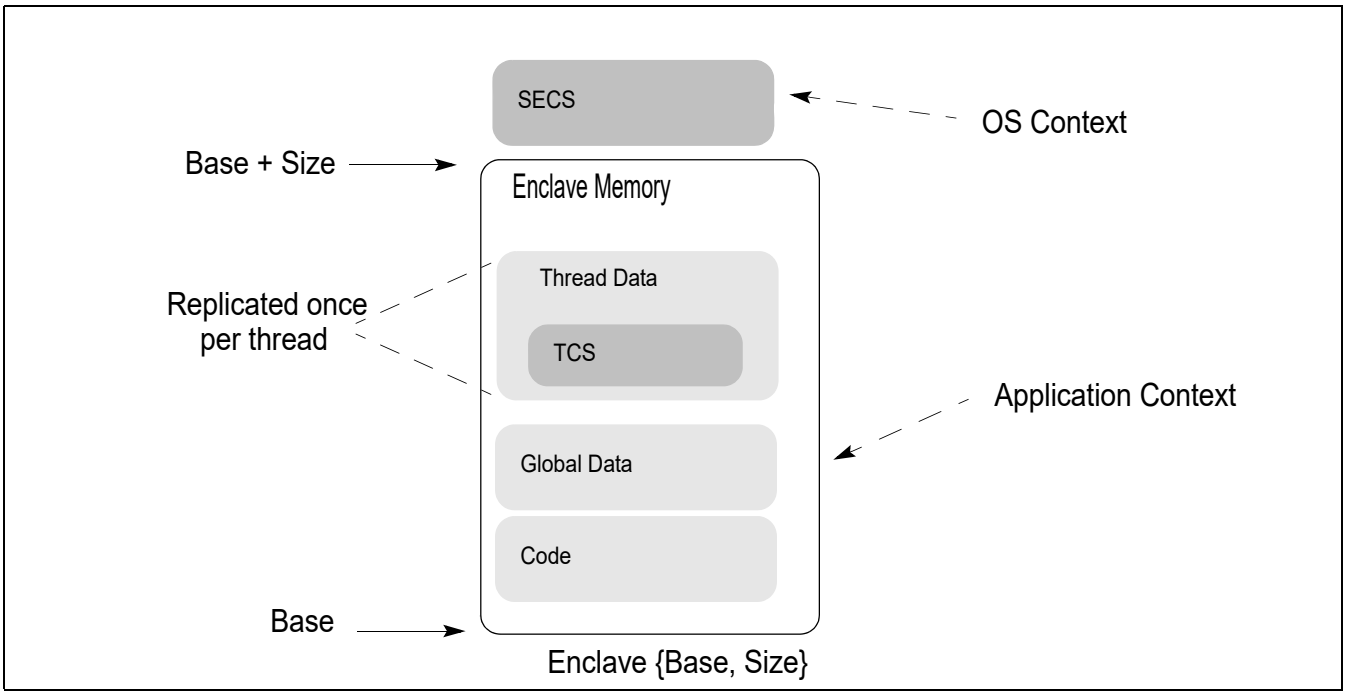

Figure 36-1. Enclave Memory Layout

The enclave creation, commitment of memory resources, and finalizing the enclave's identity with measurement comprises multiple phases. This process can be illustrated by the following exemplary steps:

1. The application hands over the enclave content along with additional information required by the enclave creation API to the enclave creation service running at privilege level 0.
2. The enclave creation service running at privilege level 0 uses the ECREATE leaf function to set up the initial environment, specifying base address and size of the enclave. This address range, the ELRANGE, is part of the application's address space. This reserves the memory range. The enclave will now reside in this address

region. ECREATE also allocates an Enclave Page Cache (EPC) page for the SGX Enclave Control Structure (SECS). Note that this page is not required to be a part of the enclave linear address space and is not required to be mapped into the process.

3. The enclave creation service uses the EADD leaf function to commit EPC pages to the enclave, and use EEXTEND to measure the committed memory content of the enclave. For each page to be added to the enclave:
   — Use EADD to add the new page to the enclave.
   — If the enclave developer requires measurement of the page as a proof for the content, use EEXTEND to add a measurement for 256 bytes of the page. Repeat this operation until the entire page is measured.
4. The enclave creation service uses the EINIT leaf function to complete the enclave creation process and finalize the enclave measurement to establish the enclave identity. Until an EINIT is executed, the enclave is not permitted to execute any enclave code (i.e., entering the enclave by executing EENTER would result in a fault).

36.1.1 ECREATE

The ECREATE leaf function sets up the initial environment for the enclave by reading an SGX Enclave Control Structure (SECS) that contains the enclave's address range (ELRANGE) as defined by BASEADDR and SIZE, the ATTRIBUTES and MISCSELECT bitmaps, and the SSAFRAMESIZE. It then securely stores this information in an Enclave Page Cache (EPC) page. ELRANGE is part of the application's address space. ECREATE also initializes a cryptographic log of the enclave's build process.

36.1.2 EADD and EEXTEND Interaction

Once the SECS has been created, enclave pages can be added to the enclave via EADD. This involves converting a free EPC page into either a PT_REG or a PT_TCS page.

When EADD is invoked, the processor will update the EPCM entry with the type of page (PT_REG or PT_TCS), the linear address used by the enclave to access the page, and the enclave access permissions for the page. It associates the page to the SECS provided as input. The EPCM entry information is used by hardware to manage access control to the page. EADD records EPCM information in the cryptographic log stored in the SECS and copies 4 KBytes of data from unprotected memory outside the EPC to the allocated EPC page.

System software is responsible for selecting a free EPC page. System software is also responsible for providing the type of page to be added, the attributes of the page, the contents of the page, and the SECS (enclave) to which the page is to be added as requested by the application. Incorrect data would lead to a failure of EADD or to an incorrect cryptographic log and a failure at EINIT time.

After a page has been added to an enclave, software can measure a 256 byte region as determined by the developer by invoking EEXTEND. Thus to measure an entire 4KB page, system software must execute EEXTEND 16 times. Each invocation of EEXTEND adds to the cryptographic log information about which region is being measured and the measurement of the section.

Entries in the cryptographic log define the measurement of the enclave and are critical in gaining assurance that the enclave was correctly constructed by the untrusted system software.

36.1.3 EINIT Interaction

Once system software has completed the process of adding and measuring pages, the enclave needs to be initialized by the EINIT leaf function. After an enclave is initialized, EADD and EEXTEND are disabled for that enclave (An attempt to execute EADD/EEXTEND to enclave after enclave initialization will result in a fault). The initialization process finalizes the cryptographic log and establishes the **enclave identity** and **sealing identity** used by EGETKEY and EREPORT.

A cryptographic hash of the log is stored as the **enclave identity**. Correct construction of the enclave results in the cryptographic hash matching the one built by the enclave owner and included as the ENCLAVEHASH field of SIGSTRUCT. The **enclave identity** provided by the EREPORT leaf function can be verified by a remote party.

The EINIT leaf function checks the EINIT token to validate that the enclave has been enabled on this platform. If the enclave is not correctly constructed, or the EINIT token is not valid for the platform, or SIGSTRUCT isn't properly signed, then EINIT will fail. See the EINIT leaf function for details on the error reporting.

The **enclave identity** is a cryptographic hash that reflects the enclave attributes and MISCSELECT value, content of the enclave, the order in which it was built, the addresses it occupies in memory, the security attributes, and access right permissions of each page. The **enclave identity** is established by the EINIT leaf function.

The **sealing identity** is managed by a sealing authority represented by the hash of the public key used to sign the SIGSTRUCT structure processed by EINIT. The sealing authority assigns a product ID (ISVPRODID) and security version number (ISVSVN) to a particular enclave identity.

EINIT establishes the sealing identity using the following steps:

1. Verifies that SIGSTRUCT is properly signed using the public key enclosed in the SIGSTRUCT.
2. Checks that the measurement of the enclave matches the measurement of the enclave specified in SIGSTRUCT.
3. Checks that the enclave's attributes and MISCSELECT values are compatible with those specified in SIGSTRUCT.
4. Finalizes the measurement of the enclave and records the **sealing identity** (the sealing authority, product id and security version number) and **enclave identity** in the SECS.
5. Sets the ATTRIBUTES.INIT bit for the enclave.

36.1.4 Intel® SGX Launch Control Configuration

Intel® SGX Launch Control is a set of controls that govern the creation of enclaves. Before the EINIT leaf function will successfully initialize an enclave, a designated Launch Enclave must create an EINITTOKEN for that enclave. Launch Enclaves have SECS.ATTRIBUTES.EINITTOKEN_KEY = 1, granting them access to the EINITTOKEN_KEY from the EGETKEY leaf function. EINITTOKEN_KEY must be used by the Launch Enclave when computing EINITTOKEN.MAC, the Message Authentication Code of the EINITTOKEN.

The hash of the public key used to sign the SIGSTRUCT of the Launch Enclave must equal the value in the IA32_SGXLEPUBKEYHASH MSRs. Only Launch Enclaves are allowed to launch without a valid token.

The IA32_SGXLEPUBKEYHASH MSRs are provided to designate the platform's Launch Enclave. IA32_SGXLEPUBKEYHASH defaults to digest of Intel's launch enclave signing key after reset.

IA32_FEATURE_CONTROL bit 17 controls the permissions on the IA32_SGXLEPUBKEYHASH MSRs when CPUID.(EAX=12H, ECX=00H):EAX[0] = 1. If IA32_FEATURE_CONTROL is locked with bit 17 set, IA32_SGXLEPUBKEYHASH MSRs are reconfigurable (writeable). If either IA32_FEATURE_CONTROL is not locked or bit 17 is clear, the MSRs are read only. By leaving these MSRs writable, system SW or a VMM can support a plurality of Launch Enclaves for hosting multiple execution environments. See Table 40.2.2 for more details.

36.2 ENCLAVE ENTRY AND EXITING

36.2.1 Controlled Entry and Exit

The EENTER leaf function is the method to enter the enclave under program control. To execute EENTER, software must supply an address of a TCS that is part of the enclave to be entered. The TCS holds the location inside the enclave to transfer control to and a pointer to the SSA frame inside the enclave that an AEX should store the register state to.

When a logical processor enters an enclave, the TCS is considered busy until the logical processors exits the enclave. An attempt to enter an enclave through a busy TCS results in a fault. Intel® SGX allows an enclave builder to define multiple TCSs, thereby providing support for multithreaded enclaves.

Software must also supply to EENTER the Asynchronous Exit Pointer (AEP) parameter. AEP is an address external to the enclave which an exception handler will return to using IRET. Typically the location would contain the ERESUME instruction. ERESUME transfers control back to the enclave, to the address retrieved from the enclave thread's saved state.

EENTER performs the following operations:

1. Check that TCS is not busy and flush all cached linear-to-physical mappings.
2. Change the mode of operation to be in enclave mode.
3. Save the old RSP, RBP for later restore on AEX (Software is responsible for setting up the new RSP, RBP to be used inside enclave).
4. Save XCR0 and replace it with the XFRM value for the enclave.
5. Check if software wishes to debug (applicable to a debuggable enclave):
   — If not debugging, then configure hardware so the enclave appears as a single instruction.
   — If debugging, then configure hardware to allow traps, breakpoints, and single steps inside the enclave.
6. Set the TCS as busy.
7. Transfer control from outside enclave to predetermined location inside the enclave specified by the TCS.

The EEXIT leaf function is the method of leaving the enclave under program control. EEXIT receives the target address outside of the enclave that the enclave wishes to transfer control to. It is the responsibility of enclave software to erase any secret from the registers prior to invoking EEXIT. To allow enclave software to easily perform an external function call and re-enter the enclave (using EEXIT and EENTER leaf functions), EEXIT returns the value of the AEP that was used when the enclave was entered.

EEXIT performs the following operations:

1. Clear enclave mode and flush all cached linear-to-physical mappings.
2. Mark TCS as not busy.
3. Transfer control from inside the enclave to a location on the outside specified as parameter to the EEXIT leaf function.

36.2.2 Asynchronous Enclave Exit (AEX)

Asynchronous and synchronous events, such as exceptions, interrupts, traps, SMIs, and VM exits may occur while executing inside an enclave. These events are referred to as Enclave Exiting Events (EEE). Upon an EEE, the processor state is securely saved inside the enclave (in the thread's current SSA frame) and then replaced by a synthetic state to prevent leakage of secrets. The process of securely saving state and establishing the synthetic state is called an Asynchronous Enclave Exit (AEX). Details of AEX is described in Chapter 37, "Enclave Exiting Events".

As part of most EEEs, the AEP is pushed onto the stack as the location of the eventing address. This is the location where control will return to after executing the IRET. The ERESUME leaf function can be executed from that point to reenter the enclave and resume execution from the interrupted point.

After AEX has completed, the logical processor is no longer in enclave mode and the exiting event is processed normally. Any new events that occur after the AEX has completed are treated as having occurred outside the enclave (e.g., a #PF in dispatching to an interrupt handler).

36.2.3 Resuming Execution after AEX

After system software has serviced the event that caused the logical processor to exit an enclave, the logical processor can continue enclave execution using ERESUME. ERESUME restores processor state and returns control to where execution was interrupted.

If the cause of the exit was an exception or a fault and was not resolved, the event will be triggered again if the enclave is re-entered using ERESUME. For example, if an enclave performs a divide by 0 operation, executing ERESUME will cause the enclave to attempt to re-execute the faulting instruction and result in another divide by 0 exception. Intel® SGX provides the means for an enclave developer to handle enclave exceptions from within the enclave. Software can enter the enclave at a different location and invoke the exception handler within the enclave by executing the EENTER leaf function. The exception handler within the enclave can read the fault information from the SSA frame and attempt to resolve the faulting condition or simply return and indicate to software that the enclave should be terminated (e.g., using EEXIT).

36.2.3.1 ERESUME Interaction

ERESUME restores registers depending on the mode of the enclave (32 or 64 bit).

- In 32-bit mode (IA32_EFER.LMA = 0 || CS.L = 0), the low 32-bits of the legacy registers (EAX, EBX, ECX, EDX, ESP, EBP, ESI, EDI, EIP, and EFLAGS) are restored from the thread's GPR area of the current SSA frame. Neither the upper 32 bits of the legacy registers nor the 64-bit registers (R8 … R15) are loaded.
- In 64-bit mode (IA32_EFER.LMA = 1 && CS.L = 1), all 64 bits of the general processor registers (RAX, RBX, RCX, RDX, RSP, RBP, RSI, RDI, R8 … R15, RIP, and RFLAGS) are loaded.

Extended features specified by SECS.ATTRIBUTES.XFRM are restored from the XSAVE area of the current SSA frame. The layout of the x87 area depends on the current values of IA32_EFER.LMA and CS.L:

- IA32_EFER.LMA = 0 || CS.L = 0
  - — 32-bit load in the same format that XSAVE/FXSAVE uses with these values.
- IA32_EFER.LMA = 1 && CS.L = 1
  - — 64-bit load in the same format that XSAVE/FXSAVE uses with these values as if REX.W = 1.

36.3 CALLING ENCLAVE PROCEDURES

36.3.1 Calling Convention

In standard call conventions subroutine parameters are generally pushed onto the stack. The called routine, being aware of its own stack layout, knows how to find parameters based on compile-time-computable offsets from the SP or BP register (depending on runtime conventions used by the compiler).

Because of the stack switch when calling an enclave, stack-located parameters cannot be found in this manner. Entering the enclave requires a modified parameter passing convention.

For example, the caller might push parameters onto the untrusted stack and then pass a pointer to those parameters in RAX to the enclave software. The exact choice of calling conventions is up to the writer of the edge routines; be those routines hand-coded or compiler generated.

36.3.2 Register Preservation

As with most systems, it is the responsibility of the callee to preserve all registers except that used for returning a value. This is consistent with conventional usage and tends to optimize the number of register save/restore operations that need be performed. It has the additional security result that it ensures that data is scrubbed from any registers that were used by enclave to temporarily contain secrets.

36.3.3 Returning to Caller

No registers are modified during EEXIT. It is the responsibility of software to remove secrets in registers before executing EEXIT.

36.4 INTEL® SGX KEY AND ATTESTATION

36.4.1 Enclave Measurement and Identification

During the enclave build process, two "measurements" are taken of each enclave and are stored in two 256-bit Measurement Registers (MR): MRENCLAVE and MRSIGNER. MRENCLAVE represents the enclave's contents and build process. MRSIGNER represents the entity that signed the enclave's SIGSTRUCT.

The values of the Measurement Registers are included in attestations to identify the enclave to remote parties. The MRs are also included in most keys, binding keys to enclaves with specific MRs.

36.4.1.1 MRENCLAVE

MRENCLAVE is a unique 256 bit value that identifies the code and data that was loaded into the enclave during the initial launch. It is computed as a SHA256 hash that is initialized by the ECREATE leaf function. EADD and EEXTEND leaf functions record information about each page and the content of those pages. The EINIT leaf function finalizes the hash, which is stored in SECS.MRENCLAVE. Any tampering with the build process, contents of a page, page permissions, etc will result in a different MRENCLAVE value.

Figure 36-2 illustrates a simplified flow of changes to the MRENCLAVE register when building an enclave:

- Enclave creation with ECREATE.
- Copying a non-enclave source page into the EPC of an un-initialized enclave with EADD.
- Updating twice of the MRENCLAVE after modifying the enclave's page content, i.e., EEXTEND twice.
- Finalizing the enclave build with EINIT.

Details on specific values inserted in the hash are available in the individual instruction definitions.

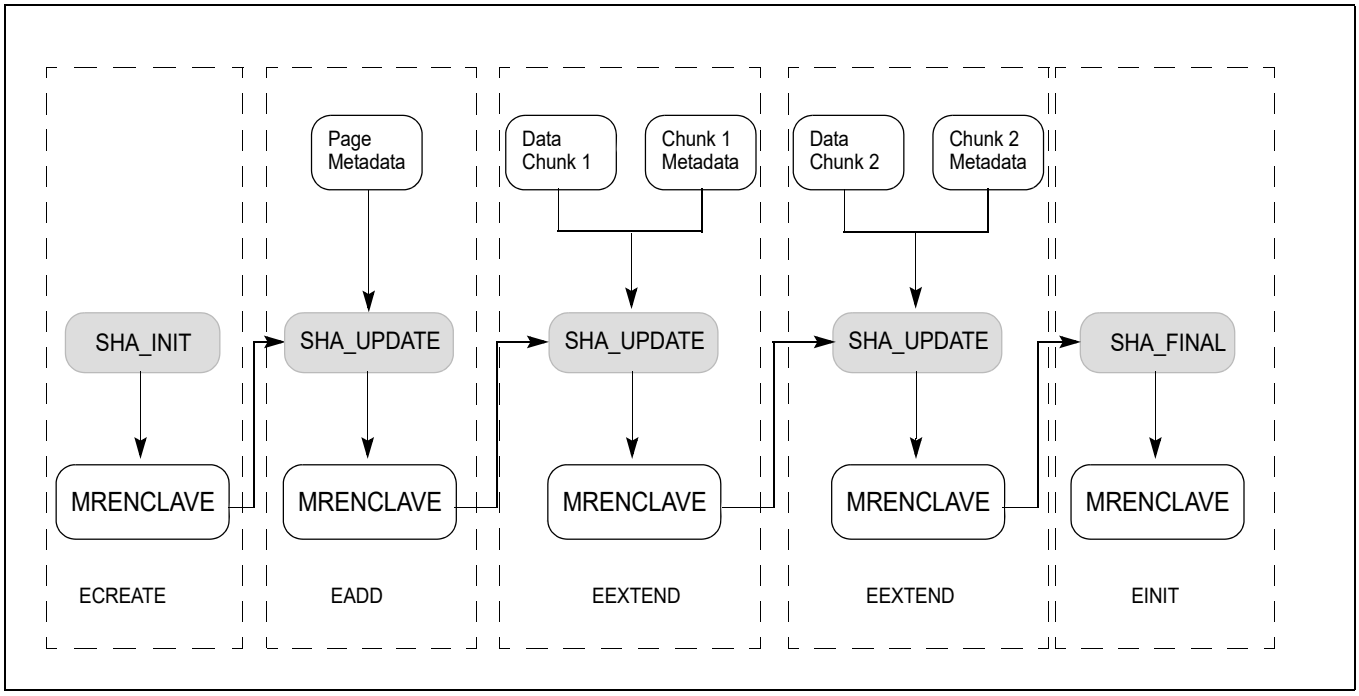

Figure 36-2. Measurement Flow of Enclave Build Process

36.4.1.2 MRSIGNER

Each enclave is signed using a 3072 bit RSA key. The signature is stored in the SIGSTRUCT. In the SIGSTRUCT, the enclave's signer also assigns a product ID (ISVPRODID) and a security version (ISVSVN) to the enclave. MRSIGNER is the SHA-256 hash of the signer's public key. For platforms that support Key Separation and Sharing (CPUID.(EAX=12H, ECX=1).EAX.KSS[7]) the SIGSTRUCT can additionally specify an 16 byte extended product ID (ISVEXTPRODID), and a 16 byte family ID (ISVFAMILYID).

In attestation, MRSIGNER can be used to allow software to approve of an enclave based on the author rather than maintaining a list of MRENCLAVEs. It is used in key derivation to allow software to create a lineage of an application. By signing multiple enclaves with the same key, the enclaves will share the same keys and data. Combined

with security version numbering, the author can release multiple versions of an application which can access keys for previous versions, but not future versions of that application.

36.4.1.3 CONFIGID

For platforms that support enhancements for key separation and sharing (CPUID.(EAX=12H, ECX=1).EAX.KSS[7]) when the enclave is created the platform can additionally provide 32-byte configuration identifier (CONFIGID). How this value is used is dependent on the enclave but it is intended to allow enclave creators to indicate what additional content may be accepted by the enclave post-initialization.

36.4.2 Security Version Numbers (SVN)

Intel® SGX supports a versioning system that allows the signer to identify different versions of the same software released by an author. The security version is independent of the functional version an author uses and is intended to specify security equivalence. Multiple releases with functional enhancements may all share the same SVN if they all have the same security properties or posture. Each enclave has an SVN and the underlying hardware has an SVN.

The SVNs are attested to in EREPORT and are included in the derivation of most keys, thus providing separation between data for older/newer versions.

36.4.2.1 Enclave Security Version

In the SIGSTRUCT, the MRSIGNER is associated with a 16-bit Product ID (ISVPRODID) and a 16 bit integer SVN (ISVSVN). Together they define a specific group of versions of a specific product. Most keys, including the Seal Key, can be bound to this pair.

To support upgrading from one release to another, EGETKEY will return keys corresponding to any value less than or equal to the software's ISVSVN.

36.4.2.2 Hardware Security Version

CPUSVN is a 128 bit value that reflects the microcode update version and authenticated code modules supported by the processor. Unlike ISVSVN, CPUSVN is not an integer and cannot be compared mathematically. Not all values are valid CPUSVNs.

Software must ensure that the CPUSVN provided to EGETKEY is valid. EREPORT will return the CPUSVN of the current environment. Software can execute EREPORT with TARGETINFO set to zeros to retrieve a CPUSVN from REPORTDATA. Software can access keys for a CPUSVN recorded previously, provided that each of the elements reflected in CPUSVN are the same or have been upgraded.

36.4.2.3 CONFIGID Security Version

The CONFIGID field can be used to contain the hash of a signing key for verifying the additional content. In this case, similar to the relationship between MRSIGNER and ISVSVN, CONFIGID needs a CONFIGID Security Version Number. CONFIGIDSVN can be specified at the same time as CONFIGID.

36.4.3 Keys

Intel® SGX provides software with access to keys unique to each processor and rooted in HW keys inserted into the processor during manufacturing.

Each enclave requests keys using the EGETKEY leaf function. The key is based on enclave parameters such as measurement, the enclave signing key, security attributes of the enclave, and the Hardware Security version of the processor itself. A full list of parameter options is specified in the KEYREQUEST structure, see details in Section 35.18.

By deriving keys using enclave properties, SGX guarantees that if two enclaves call EGETKEY, they will receive a unique key only accessible by the respective enclave. It also guarantees that the enclave will receive the same key

on every future execution of EGETKEY. Some parameters are optional or configurable by software. For example, a Seal key can be based on the signer of the enclave, resulting in a key available to multiple enclaves signed by the same party.

The EGETKEY leaf function provides several key types. Each key is specific to the processor, CPUSVN, and the enclave that executed EGETKEY. The EGETKEY instruction definition details how each of these keys is derived, see Table 38-64. Additionally,

- SEAL Key: The Seal key is a general purpose key for the enclave to use to protect secrets. Typical uses of the Seal key are encrypting and calculating MAC of secrets on disk. There are 2 types of Seal Key described in Section 36.4.3.1.
- REPORT Key: This key is used to compute the MAC on the REPORT structure. The EREPORT leaf function is used to compute this MAC, and destination enclave uses the Report key to verify the MAC. The software usage flow is detailed in Section 36.4.3.2.
- EINITTOKEN_KEY: This key is used by Launch Enclaves to compute the MAC on EINITTOKENs. These tokens are then verified in the EINIT leaf function. The key is only available to enclaves with ATTRIBUTE.EINITTOKEN_KEY set to 1.
- PROVISIONING Key and PROVISIONING SEAL Key: These keys are used by attestation key provisioning software to prove to remote parties that the processor is genuine and identify the currently executing TCB. These keys are only available to enclaves with ATTRIBUTE.PROVISIONKEY set to 1.

36.4.3.1 Sealing Enclave Data

Enclaves can protect persistent data using Seal keys to provide encryption and/or integrity protection. EGETKEY provides two types of Seal keys specified in KEYREQUEST.KEYPOLICY field: MRENCLAVE-based key and MRSIGNER-based key.

The MRENCLAVE-based keys are available only to enclave instances sharing the same MRENCLAVE. If a new version of the enclave is released, the Seal keys will be different. Retrieving previous data requires additional software support.

The MRSIGNER-based keys are bound to the 3 tuple (MRSIGNER, ISVPRODID, ISVSVN). These keys are available to any enclave with the same MRSIGNER and ISVPRODID and an ISVSVN equal to or greater than the key in questions. This is valuable for allowing new versions of the same software to retrieve keys created before an upgrade.

For platforms that support enhancements for key separation and sharing (CPUID.(EAX=12H, ECX=1).EAX.KSS[7]) four additional key policies for seal key derivation are provided. These add the ISVEXTPRODID, ISVFAMILYID, and CONFIGID/CONFIGSVN to the key derivation. Additionally, there is a policy to remove ISVPRODID from a key derivation to create a shared between different products that share the same MRSIGNER.

36.4.3.2 Using REPORTs for Local Attestation

SGX provides a means for enclaves to securely identify one another, this is referred to as "Local Attestation". SGX provides a hardware assertion, REPORT that contains calling enclaves Attributes, Measurements and User supplied data (described in detail in Section 35.16). Figure 36-3 shows the basic flow of information.

1. The source enclave determines the identity of the target enclave to populate TARGETINFO.
2. The source enclave calls EREPORT instruction to generate a REPORT structure. The EREPORT instruction conducts the following:
   — Populates the REPORT with identify information about the calling enclave.
   — Derives the Report Key that is returned when the target enclave executes the EGETKEY. TARGETINFO provides information about the target.
   — Computes a MAC over the REPORT using derived target enclave Report Key.
3. Non-enclave software copies the REPORT from source to destination.
4. The target enclave executes the EGETKEY instruction to request its REPORT key, which is the same key used by EREPORT at the source.
5. The target enclave verifies the MAC and can then inspect the REPORT to identify the source.

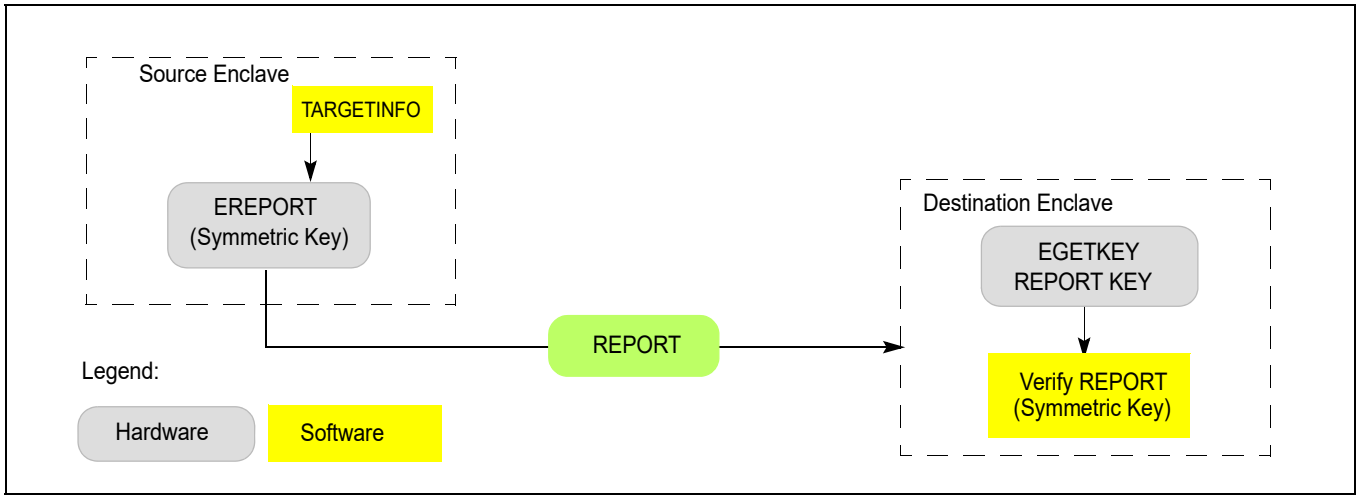

Figure 36-3. SGX Local Attestation

36.5 EPC AND MANAGEMENT OF EPC PAGES

EPC layout is implementation specific, and is enumerated through CPUID (see Table 34-7 for EPC layout). EPC is typically configured by BIOS at system boot time.

36.5.1 EPC Implementation

EPC must be properly protected against attacks. One example of EPC implementation could use a Memory Encryption Engine (MEE). An MEE provides a cost-effective mechanism of creating cryptographically protected volatile storage using platform DRAM. These units provide integrity, replay, and confidentiality protection. Details are implementation specific.

36.5.2 OS Management of EPC Pages

The EPC is a finite resource. SGX1 (i.e., CPUID.(EAX=12H, ECX=0):EAX.SGX1 = 1 but CPUID.(EAX=12H, ECX=0):EAX.SGX2 = 0) provides the EPC manager with leaf functions to manage this resource and properly swap pages out of and into the EPC. For that, the EPC manager would need to keep track of all EPC entries, type and state, context affiliation, and SECS affiliation.

Enclave pages that are candidates for eviction should be moved to BLOCKED state using EBLOCK instruction that ensures no new cached virtual to physical address mappings can be created by attempts to reference a BLOCKED page.

Before evicting blocked pages, EPC manager should execute ETRACK leaf function on that enclave and ensure that there are no stale cached virtual to physical address mappings for the blocked pages remain on any thread on the platform.

After removing all stale translations from blocked pages, system software should use the EWB leaf function for securely evicting pages out of the EPC. EWB encrypts a page in the EPC, writes it to unprotected memory, and invalidates the copy in EPC. In addition, EWB also creates a cryptographic MAC (PCMD.MAC) of the page and stores it in unprotected memory. A page can be reloaded back to the processor only if the data and MAC match. To ensure that only the latest version of the evicted page can be loaded back, the version of the evicted page is stored securely in a Version Array (VA) in EPC.

SGX1 includes two instructions for reloading pages that have been evicted by system software: ELDU and ELDB. The difference between the two instructions is the value of the paging state at the end of the instruction. ELDU results in a page being reloaded and set to an UNBLOCKED state, while ELDB results in a page loaded to a BLOCKED state.

ELDB is intended for use by a Virtual Machine Monitor (VMM). When a VMM reloads an evicted page, it needs to restore it to the correct state of the page (BLOCKED vs. UNBLOCKED) as it existed at the time the page was evicted. Based on the state of the page at eviction, the VMM chooses either ELDB or ELDU.

36.5.2.1 Enhancement to Managing EPC Pages

On processors supporting SGX2 (i.e., CPUID.(EAX=12H, ECX=0):EAX.SGX2 = 1), the EPC manager can manage EPC resources (while enclave is running) with more flexibility provided by the SGX2 leaf functions. The additional flexibility is described in Section 36.5.7 through Section 36.5.11.

36.5.3 Eviction of Enclave Pages

Intel SGX paging is optimized to allow the Operating System (OS) to evict multiple pages out of the EPC under a single synchronization.

The suggested flow for evicting a list of pages from the EPC is:

1. For each page to be evicted from the EPC:
   a. Select an empty slot in a Version Array (VA) page.
      - If no empty VA page slots exist, create a new VA page using the EPA leaf function.
   b. Remove linear-address to physical-address mapping from the enclave context's mapping tables (page table and EPT tables).
   c. Execute the EBLOCK leaf function for the target page. This sets the target page state to BLOCKED. At this point no new mappings of the page will be created. So any access which does not have the mapping cached in the TLB will generate a #PF.
2. For each enclave containing pages selected in step 1:
   — Execute an ETRACK leaf function pointing to that enclave's SECS. This initiates the tracking process that ensures that all caching of linear-address to physical-address translations for the blocked pages is cleared.
3. For all logical processors executing in processes (OS) or guests (VMM) that contain the enclaves selected in step 1:
   — Issue an IPI (inter-processor interrupt) to those threads. This causes those logical processors to asynchronously exit any enclaves they might be in, and as a result flush cached linear-address to physical-address translations that might hold stale translations to blocked pages. There is no need for additional measures such as performing a "TLB shootdown".
4. After enclaves exit, allow logical processors to resume normal operation, including enclave re-entry as the tracking logic keeps track of the activity.
5. For each page to be evicted:
   — Evict the page using the EWB leaf function with parameters include the effective-address pointer to the EPC page, the VA slot, a 4K byte buffer to hold the encrypted page contents, and a 128 byte buffer to hold page metadata. The last three elements are tied together cryptographically and must be used to later reload the page.

At this point, system software has the only copy of each page data encrypted with its page metadata in main memory.

36.5.4 Loading an Enclave Page

To reload a previously evicted page, system software needs four elements: the VA slot used when the page was evicted, a buffer containing the encrypted page contents, a buffer containing the page metadata, and the parent SECS to associate this page with. If the VA page or the parent SECS are not already in the EPC, they must be reloaded first.

1. Execute ELDB/ELDU (depending on the desired BLOCKED state for the page), passing as parameters: the EPC page linear address, the VA slot, the encrypted page, and the page metadata.

2. Create a mapping in the enclave context's mapping tables (page tables and EPT tables) to allow the application to access that page (OS: system page table; VMM: EPT).

The ELDB/ELDU instruction marks the VA slot empty so that the page cannot be replayed at a later date.

36.5.5 Eviction of an SECS Page

The eviction of an SECS page is similar to the eviction of an enclave page. The only difference is that an SECS page cannot be evicted until all other pages belonging to the enclave have been evicted. Since all other pages have been evicted, there will be no threads executing inside the enclave and tracking with ETRACK isn't necessary. When reloading an enclave, the SECS page must be reloaded before all other constituent pages.

1. Ensure all pages are evicted from enclave.
2. Select an empty slot in a Version Array page.
   — If no VA page exists with an empty slot, create a new one using the EPA function leaf.
3. Evict the page using the EWB leaf function with parameters include the effective-address pointer to the EPC page, the VA slot, a 4K byte buffer to hold the encrypted page contents and a 128 byte buffer to hold page metadata. The last three elements are tied together cryptographically and must be used to later reload the page.

36.5.6 Eviction of a Version Array Page

VA pages do not belong to any enclave and tracking with ETRACK isn't necessary. When evicting the VA page, a slot in a different VA page must be specified in order to provide versioning of the evicted VA page.

1. Select a slot in a Version Array page other than the page being evicted.
   — If no VA page exists with an empty slot, create a new one using the EPA leaf function.
2. Evict the page using the EWB leaf function with parameters include the effective-address pointer to the EPC page, the VA slot, a 4K byte buffer to hold the encrypted page contents, and a 128 byte buffer to hold page metadata. The last three elements are tied together cryptographically and must be used to later reload the page.

36.5.7 Allocating a Regular Page

On processors that support SGX2, allocating a new page to an already initialized enclave is accomplished by invoking the EAUG leaf function. Typically, the enclave requests that the OS allocates a new page at a particular location within the enclave's address space. Once allocated, the page remains in a pending state until the enclave executes the corresponding EACCEPT leaf function to accept the new page into the enclave. Page allocation operations may be batched to improve efficiency.

The typical process for allocating a regular page is as follows:

1. Enclave requests additional memory from OS when the current allocation becomes insufficient.
2. The OS invokes the EAUG leaf function to add a new memory page to the enclave.
   a. EAUG may only be called on a free EPC page.
   b. Successful completion of the EAUG instruction places the target page in the VALID and PENDING state.
   c. All dynamically created pages have the type PT_REG and content of all zeros.
3. The OS maps the page in the enclave context's mapping tables.
4. The enclave issues an EACCEPT instruction, which verifies the page's attributes and clears the PENDING state. At that point the page becomes accessible for normal enclave use.

36.5.8 Allocating a TCS Page

On processors that support SGX2, allocating a new TCS page to an already initialized enclave is a two-step process. First the OS allocates a regular page with a call to EAUG. This page must then be accepted and initialized by the enclave to which it belongs. Once the page has been initialized with appropriate values for a TCS page, the enclave requests the OS to change the page's type to PT_TCS. This change must also be accepted. As with allocating a regular page, TCS allocation operations may be batched.

A typical process for allocating a TCS page is as follows:

1. Enclave requests an additional page from the OS.
2. The OS invokes EAUG to add a new regular memory page to the enclave.
   a. EAUG may only be called on a free EPC page.
   b. Successful completion of the EAUG instruction places the target page in the VALID and PENDING state.
3. The OS maps the page in the enclave context's mapping tables.
4. The enclave issues an EACCEPT instruction, at which point the page becomes accessible for normal enclave use.
5. The enclave initializes the contents of the new page.
6. The enclave requests that the OS convert the page from type PT_REG to PT_TCS.
7. OS issues an EMODT instruction on the page.
   a. The parameters to EMODT indicate that the regular page should be converted into a TCS.
   b. EMODT forces all access rights to a page to be removed because TCS pages may not be accessed by enclave code.
8. The enclave issues an EACCEPT instruction to confirm the requested modification.

36.5.9 Trimming a Page

On processors that support SGX2, Intel SGX supports the trimming of an enclave page as a special case of EMODT. Trimming allows an enclave to actively participate in the process of removing a page from the enclave (deallocation) by splitting the process into first removing it from the enclave's access and then removing it from the EPC using the EREMOVE leaf function. The page type PT_TRIM indicates that a page has been trimmed from the enclave's address space and that the page is no longer accessible to enclave software. Modifications to a page in the PT_TRIM state are not permitted; the page must be removed and then reallocated by the OS before the enclave may use the page again. Page deallocation operations may be batched to improve efficiency.

The typical process for trimming a page from an enclave is as follows:

1. Enclave signals OS that a particular page is no longer in use.
2. OS invokes the EMODT leaf function on the page, requesting that the page's type be changed to PT_TRIM.
   a. SECS and VA pages cannot be trimmed in this way, so the initial type of the page must be PT_REG or PT_TCS.
   b. EMODT may only be called on valid enclave pages.
3. OS invokes the ETRACK leaf function on the enclave containing the page to track removal the TLB addresses from all the processors.
4. Issue an IPI (inter-processor interrupt) to flush the stale linear-address to physical-address translations for all logical processors executing in processes that contain the enclave.
5. Enclave issues an EACCEPT leaf function.
6. The OS may now permanently remove the page from the EPC (by issuing EREMOVE).

36.5.10 Restricting the EPCM Permissions of a Page

On processors that support SGX2, restricting the EPCM permissions associated with an enclave page is accomplished using the EMODPR leaf function. This operation requires the cooperation of the OS to flush stale entries to

the page and to update the page-table permissions of the page to match. Permissions restriction operations may be batched.

The typical process for restricting the permissions of an enclave page is as follows:

1. Enclave requests that the OS to restrict the permissions of an EPC page.
2. OS performs permission restriction, flushing cached linear-address to physical-address translations, and page-table modifications.
   a. Invokes the EMODPR leaf function to restrict permissions (EMODPR may only be called on VALID pages).
   b. Invokes the ETRACK leaf function on the enclave containing the page to track removal of the TLB addresses from all the processor.
   c. Issue an IPI (inter-processor interrupt) to flush the stale linear-address to physical-address translations for all logical processors executing in processes that contain the enclave.
   d. Sends IPIs to trigger enclave thread exit and TLB shootdown.
   e. OS informs the Enclave that all logical processors should now see the new restricted permissions.
3. Enclave invokes the EACCEPT leaf function.
   a. Enclave may access the page throughout the entire process.
   b. Successful call to EACCEPT guarantees that no stale cached linear-address to physical-address translations are present.

36.5.11 Extending the EPCM Permissions of a Page

On processors that support SGX2, extending the EPCM permissions associated with an enclave page is accomplished directly by the enclave using the EMODPE leaf function. After performing the EPCM permission extension, the enclave requests the OS to update the page table permissions to match the extended permission. Security wise, permission extension does not require enclave threads to leave the enclave as TLBs with stale references to the more restrictive permissions will be flushed on demand, but to allow forward progress, an OS needs to be aware that an application might signal a page fault.

The typical process for extending the permissions of an enclave page is as follows:

1. Enclave invokes EMODPE to extend the EPCM permissions associated with an EPC page (EMODPE may only be called on VALID pages).
2. Enclave requests that OS update the page tables to match the new EPCM permissions.
3. Enclave code resumes.
   a. If cached linear-address to physical-address translations are present to the more restrictive permissions, the enclave thread will page fault. The SGX2-aware OS will see that the page tables permit the access and resume the thread, which can now successfully access the page because exiting cleared the TLB.
   b. If cached linear-address to physical-address translations are not present, access to the page with the new permissions will succeed without an enclave exit.

36.5.12 VMM Oversubscription of EPC

On processors supporting oversubscription enhancements (i.e., CPUID.(EAX=12H, ECX=0):EAX[5]=1 & EAX[6] = 1) a Virtual Machine Monitor or other executive can more efficiently manage the EPC space available on the platform between virtualized entities. A typical process for using these instructions to support oversubscribing the physical EPC space on the platform is as follows:

1. VMM creates data structures for SECS tracking including a count of child pages.
2. VMM selects possible EPC victim pages.
3. VMM ages the victim pages. Some of the selected pages will be accessed by the guest. In this case the VMM will remove these pages from the victim pool and return them to the guest.
4. VMM makes remaining pages not present in EPT. It then issues IPI on each page to remove TLB mappings.

5. For every EPC victim page the VMM obtains the victim's SECS page info using ERDINFO.
   a. ENCLAVECONTEXT field in RDINFO structure will indicate the location of SECS, and the PAGE_TYPE field will indicate the page type.
   b. Child pages of SECS can be evicted.
   c. SECS pages may be evicted if the child count is zero.
   d. Some pages may be returned to active state depending on such things as page type or child count.
6. VMM increments its evicted page count for the SECS of each page (stored in the data structure created in 1).
7. If this is the first evicted page of that SECS, set Marker on SECS of the victim page (EINCVIRTCHILD). This locks the SECS in the guest. The guest cannot page out the SECS.
8. EBLOCK, ETRACK, EWB eviction sequence is executed for page.
9. After loading an SECS page back in, the VMM will set the correct ENCLAVECONTEXT for the guest using ESETCONTEXT instruction.

36.6 CHANGES TO INSTRUCTION BEHAVIOR INSIDE AN ENCLAVE

This section covers instructions whose behavior changes when executed in enclave mode.

36.6.1 Illegal Instructions

The instructions listed in Table 36-1 are ring 3 instructions which become illegal when executed inside an enclave. Executing these instructions inside an enclave will generate an exception.

The first row of Table 36-1 enumerates instructions that may cause a VM exit for VMM emulation. Since a VMM cannot emulate enclave execution, execution of any of these instructions inside an enclave results in an invalid-opcode exception (#UD) and no VM exit.

The second row of Table 36-1 enumerates I/O instructions that may cause a fault or a VM exit for emulation. Again, enclave execution cannot be emulated, so execution of any of these instructions inside an enclave results in #UD.

The third row of Table 36-1 enumerates instructions that load descriptors from the GDT or the LDT or that change privilege level. The former class is disallowed because enclave software should not depend on the contents of the descriptor tables and the latter because enclave execution must be entirely with CPL = 3. Again, execution of any of these instructions inside an enclave results in #UD.

The fourth row of Table 36-1 enumerates instructions that provide access to kernel information from user mode and can be used to aid kernel exploits from within enclave. Execution of any of these instructions inside an enclave results in #UD.

Table 36-1. Illegal Instructions Inside an Enclave

Instructions	Result	Comment
CPUID, GETSEC, RDPMC, SGDT, SIDT, SLDT, STR, VMCALL, VMFUNC	#UD	Might cause VM exit.
IN, INS/INSB/INSW/INSD, OUT, OUTS/OUTSB/OUTSW/OUTSD	#UD	I/O fault may not safely recover. May require emulation.
Far call, Far jump, Far Ret, INT *n*/INTO, IRET, LDS/LES/LFS/LGS/LSS, MOV to DS/ES/SS/FS/GS, POP DS/ES/SS/FS/GS, SYSCALL, SYSENTER	#UD	Access segment register could change privilege level.
SMSW	#UD	Might provide access to kernel information.
ENCLU[EENTER], ENCLU[ERESUME]	#GP	Cannot enter an enclave from within an enclave.

RDTSC and RDTSCP are legal inside an enclave for processors that support SGX2 (subject to the value of CR4.TSD). For processors which support SGX1 but not SGX2, RDTSC and RDTSCP will cause #UD.

RDTSC and RDTSCP instructions may cause a VM exit when inside an enclave.

Software developers must take into account that the RDTSC/RDTSCP results are not immune to influences by other software, e.g., the TSC can be manipulated by software outside the enclave.

36.6.2 RDRAND and RDSEED Instructions

These instructions may cause a VM exit if the "RDRAND exiting" VM-execution control is 1. Unlike other instructions that can cause VM exits, these instructions are legal inside an enclave. As noted in Section 28.1 of the *Intel® 64 and IA-32 Architectures Software Developer's Manual, Volume 3C*, any VM exit originating on an instruction boundary inside an enclave sets bit 27 of the exit-reason field of the VMCS. If a VMM receives a VM exit due to an attempt to execute either of these instructions determines (by that bit) that the execution was inside an enclave, it can do either of two things. It can clear the "RDRAND exiting" VM-execution control and execute VMRESUME; this will result in the enclave executing RDRAND or RDSEED again, and this time a VM exit will not occur. Alternatively, the VMM might choose to discontinue execution of this virtual machine.

NOTE

It is expected that VMMs that virtualize Intel SGX will not set "RDRAND exiting" to 1.

36.6.3 PAUSE Instruction

The PAUSE instruction may cause a VM exit from an enclave if the "PAUSE exiting" VM-execution control is 1. Unlike other instructions that can cause VM exits, the PAUSE instruction is legal inside an enclave. If a VMM receives a VM exit due to the 1-setting of "PAUSE exiting", it can do either of two things. It can clear the "PAUSE exiting" VM-execution control and execute VMRESUME; this will result in the enclave executing PAUSE again, but this time a VM exit will not occur. Alternatively, the VMM might choose to discontinue execution of this virtual machine.

The PAUSE instruction may also cause a VM exit outside of an enclave if the "PAUSE-loop exiting" VM-execution control is 1, but as the "PAUSE-loop exiting" control is ignored at CPL > 0 (see Section 26.1.3), VM exit from an enclave due to the 1-setting of "PAUSE-LOOP exiting" will never occur.

NOTE

It is expected that VMMs that virtualize Intel SGX will not set "PAUSE exiting" to 1.

36.6.4 Executions of INT1 and INT3 Inside an Enclave

The INT1 and INT3 instructions are legal inside an enclave, however, their behavior inside an enclave differs from that outside an enclave. See Section 40.4.1 for details.

36.6.5 INVD Handling when Enclaves Are Enabled

Once processor reserved memory protections are activated (see Section 36.5), any execution of INVD will result in a #GP(0).

CHAPTER 37
ENCLAVE EXITING EVENTS

Certain events, such as exceptions and interrupts, incident to (but asynchronous with) enclave execution may cause control to transition outside of enclave mode. (Most of these also cause a change of privilege level.) To protect the integrity and security of the enclave, the processor will exit the enclave (and enclave mode) before invoking the handler for such an event. For that reason, such events are called **enclave-exiting events** (EEE); EEEs include external interrupts, non-maskable interrupts, system-management interrupts, exceptions, and VM exits.

The process of leaving an enclave in response to an EEE is called an **asynchronous enclave exit** (AEX). To protect the secrecy of the enclave, an AEX saves the state of certain registers within enclave memory and then loads those registers with fixed values called **synthetic state**.

37.1 COMPATIBLE SWITCH TO THE EXITING STACK OF AEX

AEXs load registers with a pre-determined synthetic state. These registers may be later pushed onto the appropriate stack in a form as defined by the enclave-exiting event. To allow enclave execution to resume after the invoking handler has processed the enclave exiting event, the asynchronous enclave exit loads the address of trampoline code outside of the enclave into RIP. This trampoline code eventually returns to the enclave by means of an ENCLU(ERESUME) leaf function. Prior to exiting the enclave the RSP and RBP registers are restored to their values prior to enclave entry.

The stack to be used is chosen using the same rules as for non-SGX mode:

- If there is a privilege level change, the stack will be the one associated with the new ring.
- If there is no privilege level change, the current application stack is used.
- If the IA-32e IST mechanism is used, the exit stack is chosen using that method.

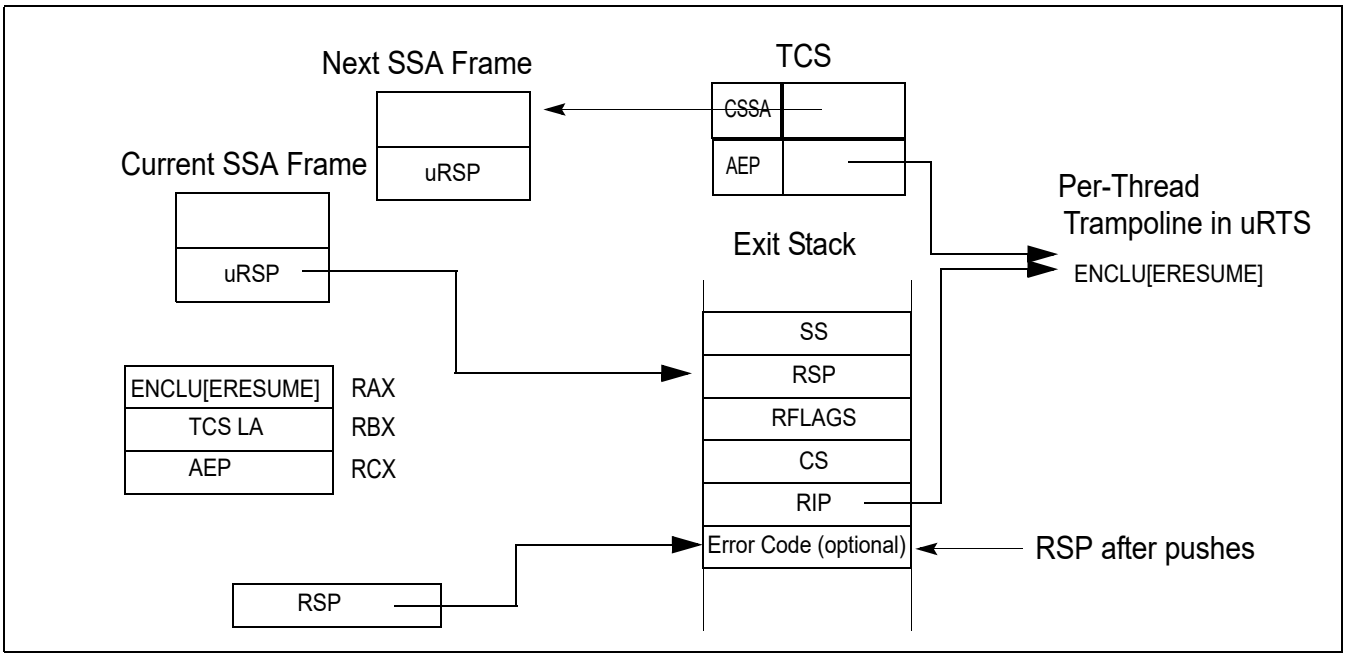

Figure 37-1. Exit Stack Just After Interrupt with Stack Switch

In all cases, the choice of exit stack and the information pushed onto it is consistent with non-SGX operation. Figure 37-1 shows the Application and Exiting Stacks after an exit with a stack switch. An exit without a stack switch uses the Application Stack. The ERESUME leaf index value is placed into RAX, the TCS pointer is placed in RBX and the AEP (see below) is placed into RCX to facilitate resuming the enclave after the exit.

Upon an AEX, the AEP (Asynchronous Exit Pointer) is loaded into the RIP. The AEP points to a trampoline code sequence which includes the ERESUME instruction that is later used to reenter the enclave.

The following bits of RFLAGS are cleared before RFLAGS is pushed onto the exit stack: CF, PF, AF, ZF, SF, OF, RF. The remaining bits are left unchanged.

37.2 STATE SAVING BY AEX

The State Save Area holds the processor state at the time of an AEX. To allow handling events within the enclave and re-entering it after an AEX, the SSA can be a stack of multiple SSA frames as illustrated in Figure 37-2.

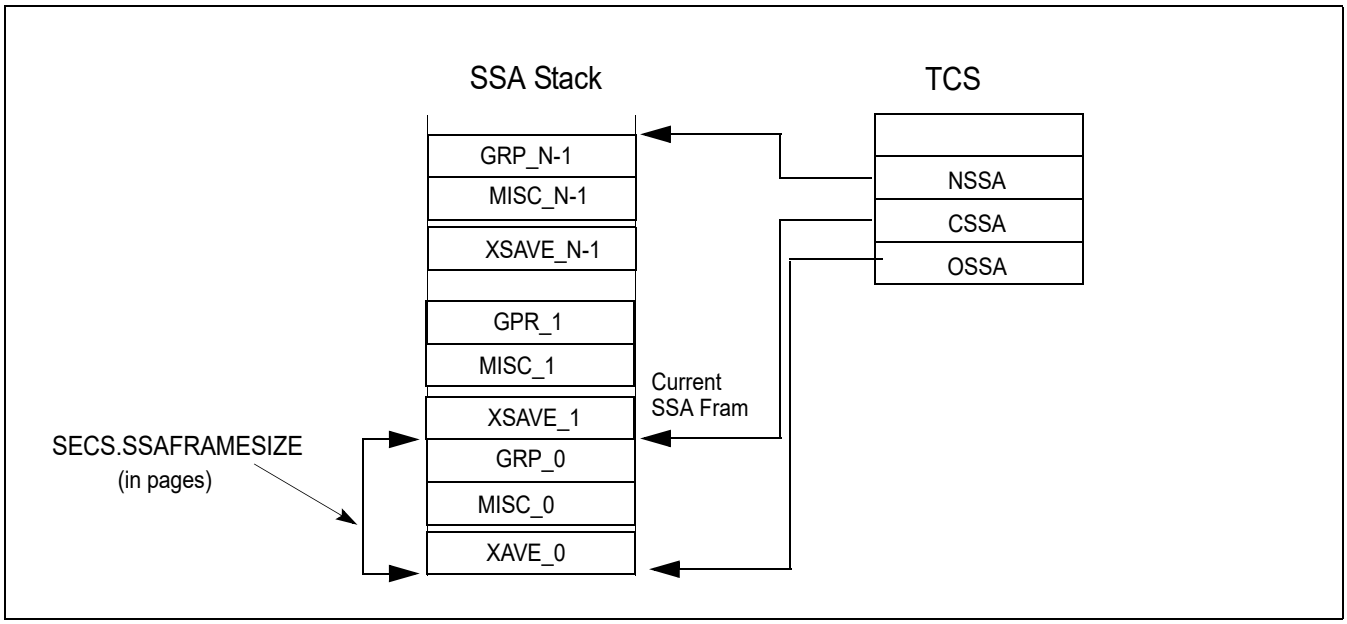

Figure 37-2. The SSA Stack

The location of the SSA frames to be used is controlled by the following variables in the TCS and the SECS:

- Size of a frame in the State Save Area (SECS.SSAFRAMESIZE): This defines the number of 4-KByte pages in a single frame in the State Save Area. The SSA frame size must be large enough to hold the GPR state, the XSAVE state, and the MISC state.
- Base address of the enclave (SECS.BASEADDR): This defines the enclave's base linear address from which the offset to the base of the SSA stack is calculated.
- Number of State Save Area Slots (TCS.NSSA): This defines the total number of slots (frames) in the State Save Area stack.
- Current State Save Area Slot (TCS.CSSA): This defines the slot to use on the next exit.
- State Save Area Offset (TCS.OSSA): This defines the offset of the base address of a set of State Save Area slots from the enclave’s base address.

When an AEX occurs, hardware selects the SSA frame to use by examining TCS.CSSA. Processor state is saved into the SSA frame (see Section 37.4) and loaded with a synthetic state (as described in Section 37.3.1) to avoid leaking secrets, RSP and RBP are restored to their values prior to enclave entry, and TCS.CSSA is incremented. As will be described later, if an exception takes the last slot, it will not be possible to reenter the enclave to handle the

exception from within the enclave. A subsequent ERESUME restores the processor state from the current SSA frame and frees the SSA frame.

The format of the XSAVE section of SSA is identical to the format used by the XSAVE/XRSTOR instructions. On EENTER, CSSA must be less than NSSA, ensuring that there is at least one State Save Area slot available for exits. If there is no free SSA frame when executing EENTER, the entry will fail.

37.3 SYNTHETIC STATE ON ASYNCHRONOUS ENCLAVE EXIT

37.3.1 Processor Synthetic State on Asynchronous Enclave Exit

Table 37-1 shows the synthetic state loaded on AEX. The values shown are the lower 32 bits when the processor is in 32 bit mode and 64 bits when the processor is in 64 bit mode.

Table 37-1. GPR, x87 Synthetic States on Asynchronous Enclave Exit

Register	Value
RAX	3 (ENCLU[3] is ERESUME).
RBX	Pointer to TCS of interrupted enclave thread.
RCX	AEP of interrupted enclave thread.
RDX, RSI, RDI	0.
RSP	Restored from SSA.uRSP.
RBP	Restored from SSA.uRBP.
R8-R15	0 in 64-bit mode; unchanged in 32-bit mode.
RIP	AEP of interrupted enclave thread.
RFLAGS	CF, PF, AF, ZF, SF, OF, RF bits are cleared. All other bits are left unchanged.
x87/SSE State	Unless otherwise listed here, all x87 and SSE state are set to the INIT state. The INIT state is the state that would be loaded by the XRSTOR instruction with bits 1:0 both set in the requested feature bitmask (RFBM), and both clear in XSTATE_BV the XSAVE header.
FCW	On #MF exception: set to 037EH. On all other exits: set to 037FH.
FSW	On #MF exception: set to 8081H. On all other exits: set to 0H.
MXCSR	On #XM exception: set to 1F01H. On all other exits: set to 1FB0H.
CR2	If the event that caused the AEX is a #PF, and the #PF does not directly cause a VM exit, then the low 12 bits are cleared. If the #PF leads directly to a VM exit, CR2 is not updated (usual IA behavior). Note: The low 12 bits are not cleared if a #PF is encountered during the delivery of the EEE that caused the AEX. This is because the #PF was not the EEE.
FS, GS	Restored to values as of most recent EENTER/ERESUME.

37.3.2 Synthetic State for Extended Features

When CR4.OSXSAVE = 1, extended features (those controlled by XCR0[63:2]) are set to their respective INIT states when this corresponding bit of SECS.XFRM is set. The INIT state is the state that would be loaded by the XRSTOR instruction had the instruction mask and the XSTATE_BV field of the XSAVE header each contained the value XFRM. (When the AEX occurs in 32-bit mode, those features that do not exist in 32-bit mode are unchanged.)

37.3.3 Synthetic State for MISC Features

State represented by SECS.MISCSELECT might also be overridden by synthetic state after it has been saved into the SSA. State represented by MISCSELECT[0] is not overridden but if the exiting event is a page fault then lower 12 bits of CR2 are cleared.

37.4 AEX FLOW

On Enclave Exiting Events (interrupts, exceptions, VM exits or SMIs), the processor state is securely saved inside the enclave, a synthetic state is loaded and the enclave is exited. The EEE then proceeds in the usual exit-defined fashion. The following sections describes the details of an AEX:

1. The exact processor state saved into the current SSA frame depends on whether the enclave is a 32-bit or a 64-bit enclave. In 32-bit mode (IA32_EFER.LMA = 0 || CS.L = 0), the low 32 bits of the legacy registers (EAX, EBX, ECX, EDX, ESP, EBP, ESI, EDI, EIP, and EFLAGS) are stored. The upper 32 bits of the legacy registers and the 64-bit registers (R8 … R15) are not stored.

   In 64-bit mode (IA32_EFER.LMA = 1 && CS.L = 1), all 64 bits of the general processor registers (RAX, RBX, RCX, RDX, RSP, RBP, RSI, RDI, R8 … R15, RIP, and RFLAGS) are stored.

   The state of those extended features specified by SECS.ATTRIBUTES.XFRM are stored into the XSAVE area of the current SSA frame. The layout of the x87 and XMM portions (the 1st 512 bytes) depends on the current values of IA32_EFER.LMA and CS.L:

   If IA32_EFER.LMA = 0 || CS.L = 0, the same format (32-bit) that XSAVE/FXSAVE uses with these values.

   If IA32_EFER.LMA = 1 && CS.L = 1, the same format (64-bit) that XSAVE/FXSAVE uses with these values when REX.W = 1.

   The cause of the AEX is saved in the EXITINFO field. See Table 35-10 for details and values of the various fields.

   The state of those miscellaneous features (see Section 35.7.2) specified by SECS.MISCSELECT are stored into the MISC area of the current SSA frame.

   If CET was enabled in the enclave, then the CET state of the enclave is saved in the CET state save area. If shadow stacks were enabled in the enclave, then the SSP is also saved into the TCS.PREVSSP field.
2. Synthetic state is created for a number of processor registers to present an opaque view of the enclave state. Table 37-1 shows the values for GPRs, x87, SSE, FS, GS, Debug, and performance monitoring on AEX. The synthetic state for other extended features (those controlled by XCR0[62:2]) is set to their respective INIT states when their corresponding bit of SECS.ATTRIBUTES.XFRM is set. The INIT state is that state as defined by the behavior of the XRSTOR instruction when HEADER.XSTATE_BV[n] is 0. Synthetic state of those miscellaneous features specified by SECS.MISCSELECT depends on the miscellaneous feature. There is no synthetic state required for the miscellaneous state controlled by SECS.MISCSELECT[0].
3. Any code and data breakpoints that were suppressed at the time of enclave entry are unsuppressed when exiting the enclave.
4. RFLAGS.TF is set to the value that it had at the time of the most recent enclave entry (except for the situation that the entry was opt-in for debug; see Section 40.2). In the SSA, RFLAGS.TF is set to 0.
5. RFLAGS.RF is set to 0 in the synthetic state. In the SSA, the value saved is the same as what would have been saved on stack in the non-SGX case (architectural value of RF). Thus, AEXs due to interrupts, traps, and code breakpoints save RF unmodified into SSA, while AEXs due to other faults save RF as 1 in the SSA.

   If the event causing AEX happened on intermediate iteration of a REP-prefixed instruction, then RF=1 is saved on SSA, irrespective of its priority.
6. Any performance monitoring activity (including PEBS) or profiling activity (LBR, Tracing using Intel PT) on the exiting thread that was suppressed due to the enclave entry on that thread is unsuppressed. Any counting that had been demoted from AnyThread counting to MyThread counting (on one logical processor) is promoted back to AnyThread counting.
7. The CET state of the enclosing application is restored to the state at the time of the most recent enclave entry, and if CET indirect branch tracking was enabled then the indirect branch tracker is unsuppressed and moved to the WAIT_FOR_ENDBRANCH state.

37.4.1 AEX Operational Detail

Temp Variables in AEX Operational Flow

Name	Type	Size (bits)	Description
TMP_RIP	Effective Address	32/64	Address of instruction at which to resume execution on ERESUME.
TMP_MODE64	binary	1	((IA32_EFER.LMA = 1) && (CS.L = 1)).
TMP_BRANCH_RECORD	LBR Record	2x64	From/To address to be pushed onto LBR stack.

The pseudo code in this section describes the internal operations that are executed when an AEX occurs in enclave mode. These operations occur just before the normal interrupt or exception processing occurs.

```
(* Save RIP for later use *)
TMP_RIP = Linear Address of Resume RIP
(* Is the processor in 64-bit mode? *)
TMP_MODE64 := ((IA32_EFER.LMA = 1) && (CS.L = 1));

(* Save all registers, When saving EFLAGS, the TF bit is set to 0 and
   the RF bit is set to what would have been saved on stack in the non-SGX case *)

 IF (TMP_MODE64 = 0)
   THEN
       Save EAX, EBX, ECX, EDX, ESP, EBP, ESI, EDI, EFLAGS, EIP into the current SSA frame using
CR_GPR_PA; (* see Table 38-5 for list of CREGs used to describe internal operation within Intel SGX *)
       SSA.RFLAGS.TF := 0;
   ELSE    (* TMP_MODE64 = 1 *)
       Save RAX, RBX, RCX, RDX, RSP, RBP, RSI, RDI, R8-R15, RFLAGS, RIP into the current SSA frame using
CR_GPR_PA;
       SSA.RFLAGS.TF := 0;
FI;
Save FS and GS BASE into SSA using CR_GPR_PA;

(* store XSAVE state into the current SSA frame's XSAVE area using the physical addresses
   that were determined and cached at enclave entry time with CR_XSAVE_PAGE_i. *)
For each XSAVE state i defined by (SECS.ATTRIBUTES.XFRM[i] = 1, destination address cached in
CR_XSAVE_PAGE_i)
  SSA.XSAVE.i := XSAVE_STATE_i;

(* Clear bytes 8 to 23 of XSAVE_HEADER, i.e., the next 16 bytes after XHEADER_BV *)

CR_XSAVE_PAGE_0.XHEADER_BV[191:64] := 0;

(* Clear bits in XHEADER_BV[63:0] that are not enabled in ATTRIBUTES.XFRM *)

CR_XSAVE_PAGE_0.XHEADER_BV[63:0] :=
   CR_XSAVE_PAGE_0.XHEADER_BV[63:0] & SECS(CR_ACTIVE_SECS).ATTRIBUTES.XFRM;
   Apply synthetic state to GPRs, RFLAGS, extended features, etc.

(* Restore the RSP and RBP from the current SSA frame's GPR area using the physical address
   that was determined and cached at enclave entry time with CR_GPR_PA. *)
RSP := CR_GPR_PA.URSP;
RBP := CR_GPR_PA.URBP;
```

```
(* Restore the FS and GS *)
FS.selector := CR_SAVE_FS.selector;
FS.base := CR_SAVE_FS.base;
FS.limit := CR_SAVE_FS.limit;
FS.access_rights := CR_SAVE_FS.access_rights;
GS.selector := CR_SAVE_GS.selector;
GS.base := CR_SAVE_GS.base;
GS.limit := CR_SAVE_GS.limit;
GS.access_rights := CR_SAVE_GS.access_rights;

(* Examine exception code and update enclave internal states*)
exception_code := Exception or interrupt vector;

(* Indicate the exit reason in SSA *)
IF (exception_code = (#DE OR #DB OR #BP OR #BR OR #UD OR #MF OR #AC OR #XM ))
   THEN
      CR_GPR_PA.EXITINFO.VECTOR := exception_code;
      IF (exception code = #BP)
         THEN CR_GPR_PA.EXITINFO.EXIT_TYPE := 6;
         ELSE CR_GPR_PA.EXITINFO.EXIT_TYPE := 3;
      FI;
      CR_GPR_PA.EXITINFO.VALID := 1;
   ELSE IF (exception_code is #PF or #GP )
      THEN
      (* Check SECS.MISCSELECT using CR_ACTIVE_SECS *)
      IF (SECS.MISCSELECT[0] is set)
         THEN
         CR_GPR_PA.EXITINFO.VECTOR := exception_code;
         CR_GPR_PA.EXITINFO.EXIT_TYPE := 3;
         IF (exception_code is #PF)
            THEN
               SSA.MISC.EXINFO. MADDR := CR2;
               SSA.MISC.EXINFO.ERRCD := PFEC;
               SSA.MISC.EXINFO.RESERVED := 0;
         ELSE
            SSA.MISC.EXINFO. MADDR := 0;
            SSA.MISC.EXINFO.ERRCD := GPEC;
            SSA.MISC.EXINFO.RESERVED := 0;
         FI;
         CR_GPR_PA.EXITINFO.VALID := 1;
   ELSE IF (exception code is #CP)
      THEN
         IF (SECS.MISCSELECT[1] is set)
            THEN
               CR_GPR_PA.EXITINFO.VECTOR := exception_code;
               CR_GPR_PA.EXITINFO.EXIT_TYPE := 3;
               CR_GPR_PA.EXITINFO.VALID := 1;
               SSA.MISC.EXINFO. MADDR := 0;
               SSA.MISC.EXINFO.ERRCD := CPEC;
               SSA.MISC.EXINFO.RESERVED := 0;
         FI;
      FI;
   ELSE
```

```
        CR_GPR_PA.EXITINFO.VECTOR := 0;
        CR_GPR_PA.EXITINFO.EXIT_TYPE := 0
        CR_GPR_PA.REASON.VALID := 0;
FI;

(* Execution will resume at the AEP *)
RIP := CR_TCS_PA.AEP;

(* Set EAX to the ERESUME leaf index *)
EAX := 3;

(* Put the TCS LA into RBX for later use by ERESUME *)
RBX := CR_TCS_LA;

(* Put the AEP into RCX for later use by ERESUME *)
RCX := CR_TCS_PA.AEP;

(* Increment the SSA frame # *)
CR_TCS_PA.CSSA := CR_TCS_PA.CSSA + 1;

(* Restore XCR0 if needed *)
IF (CR4.OSXSAVE = 1)
   THEN XCR0 := CR_SAVE_XCR0; FI;

Un-suppress all code breakpoints that are outside ELRANGE

IF (CPUID.(EAX=12H, ECX=1):EAX[6]= 1)
   THEN
        IF (CR4.CET == 1 AND IA32_U_CET.SH_STK_EN == 1)
            THEN
                CR_CET_SAVE_AREA_PA.SSP := SSP;
                CR_TCS_PA.PREVSSP := SSP;
        FI;
        IF (CR4.CET == 1 AND IA32_U_CET.ENDBR_EN == 1)
            THEN
                CR_CET_SAVE_AREA_PA.TRACKER := IA32_U_CET.TRACKER;
                CR_CET_SAVE_AREA_PA.SUPPRESS := IA32_U_CET.SUPPRESS;
        FI;
FI;
IF ((CPUID.(EAX=7H, ECX=0):EDX[CET_IBT] = 1) OR (CPUID.(EAX=7H, ECX=0):ECX[CET_SS] = 1)
   THEN
        (* restore enclosing applications CET state *)
        IA32_U_CET := CR_SAVE_IA32_U_CET;

        IF (CPUID.(EAX=7, ECX=0):ECX[CET_SS])
            SSP := CR_SAVE_SSP; FI;

        (* If indirect branch tracking enabled for enclosing application *)
        (* then move the tracker to wait_for_endbranch *)
        IF (CR4.CET == 1 AND IA32_U_CET.ENDBR_EN == 1)
            THEN
                IA32_U_CET.TRACKER := WAIT_FOR_ENDBRANCH;
                IA32_U_CET.SUPPRESS := 0;
        FI;
```

```
FI;

(* Update the thread context to show not in enclave mode *)
CR_ENCLAVE_MODE := 0;

(* Assure consistent translations. *)
Flush linear context including TLBs and paging-structure caches

IF (CR_DBGOPTIN = 0)
    THEN
        Un-suppress all breakpoints that overlap ELRANGE
        (* Clear suppressed breakpoint matches *)
        Restore suppressed breakpoint matches
        (* Restore TF *)
        RFLAGS.TF := CR_SAVE_TF;
        Un-suppress monitor trap flag;
        Un-suppress branch recording facilities;
        Un-suppress all suppressed performance monitoring activity;
        Promote any sibling-thread counters that were demoted from AnyThread to MyThread during enclave
entry back to AnyThread;
FI;

IF the "monitor trap flag" VM-execution control is 1
    THEN Pend MTF VM Exit at the end of exit; FI;

(* Clear low 12 bits of CR2 on #PF *)
IF (Exception code is #PF)
    THEN CR2 := CR2 & ~0xFFF; FI;

(* end_of_flow *)
(* Execution continues with normal event processing. *)
```

CHAPTER 38
INTEL® SGX INSTRUCTION REFERENCES

This chapter describes the supervisor and user level instructions provided by Intel® Software Guard Extensions (Intel® SGX). In general, various functionality is encoded as leaf functions within the ENCLS (supervisor), ENCLU (user), and the ENCLV (virtualization operation) instruction mnemonics. Different leaf functions are encoded by specifying an input value in the EAX register of the respective instruction mnemonic.

38.1 INTEL® SGX INSTRUCTION SYNTAX AND OPERATION

ENCLS, ENCLU, and ENCLV instruction mnemonics for all leaf functions are covered in this section.

For all instructions, the value of CS.D is ignored; addresses and operands are 64 bits in 64-bit mode and are otherwise 32 bits. Aside from EAX specifying the leaf number as input, each instruction leaf may require all or some subset of the RBX/RCX/RDX as input parameters. Some leaf functions may return data or status information in one or more of the general purpose registers.

38.1.1 ENCLS Register Usage Summary

Table 38-1 summarizes the implicit register usage of supervisor mode enclave instructions.

Table 38-1. Register Usage of Privileged Enclave Instruction Leaf Functions

Instr. Leaf	EAX	RBX	RCX	RDX
ECREATE	00H (In)	PAGEINFO (In, EA)	EPCPAGE (In, EA)	
EADD	01H (In)	PAGEINFO (In, EA)	EPCPAGE (In, EA)	
EINIT	02H (In)	SIGSTRUCT (In, EA)	SECS (In, EA)	EINITTOKEN (In, EA)
EREMOVE	03H (In)		EPCPAGE (In, EA)	
EDBGRD	04H (In)	Result Data (Out)	EPCPAGE (In, EA)	
EDBGWR	05H (In)	Source Data (In)	EPCPAGE (In, EA)	
EEXTEND	06H (In)	SECS (In, EA)	EPCPAGE (In, EA)	
ELDB	07H (In)	PAGEINFO (In, EA)	EPCPAGE (In, EA)	VERSION (In, EA)
ELDU	08H (In)	PAGEINFO (In, EA)	EPCPAGE (In, EA)	VERSION (In, EA)
EBLOCK	09H (In)		EPCPAGE (In, EA)	
EPA	0AH (In)	PT_VA (In)	EPCPAGE (In, EA)	
EWB	0BH (In)	PAGEINFO (In, EA)	EPCPAGE (In, EA)	VERSION (In, EA)
ETRACK	0CH (In)		EPCPAGE (In, EA)	
EAUG	0DH (In)	PAGEINFO (In, EA)	EPCPAGE (In, EA)	
EMODPR	0EH (In)	SECINFO (In, EA)	EPCPAGE (In, EA)	
EMODT	0FH (In)	SECINFO (In, EA)	EPCPAGE (In, EA)	
ERDINFO	010H (In)	RDINFO (In, EA*)	EPCPAGE (In, EA)	
ETRACKC	011H (In)		EPCPAGE (In, EA)	
ELDBC	012H (In)	PAGEINFO (In, EA*)	EPCPAGE (In, EA)	VERSION (In, EA)
ELDUC	013H (In)	PAGEINFO (In, EA*)	EPCPAGE (In, EA)	VERSION (In, EA)
EA: Effective Address				

38.1.2 ENCLU Register Usage Summary

Table 38-2 summarizes the implicit register usage of user mode enclave instructions.

Table 38-2. Register Usage of Unprivileged Enclave Instruction Leaf Functions

Instr. Leaf	EAX	RBX	RCX	RDX
EREPORT	00H (In)	TARGETINFO (In, EA)	REPORTDATA (In, EA)	OUTPUTDATA (In, EA)
EGETKEY	01H (In)	KEYREQUEST (In, EA)	KEY (In, EA)	
EENTER	02H (In)	TCS (In, EA)	AEP (In, EA)	
	RBX.CSSA (Out)		Return (Out, EA)	
ERESUME	03H (In)	TCS (In, EA)	AEP (In, EA)	
EEXIT	04H (In)	Target (In, EA)	Current AEP (Out)	
EACCEPT	05H (In)	SECINFO (In, EA)	EPCPAGE (In, EA)	
EMODPE	06H (In)	SECINFO (In, EA)	EPCPAGE (In, EA)	
EACCEPTCOPY	07H (In)	SECINFO (In, EA)	EPCPAGE (In, EA)	EPCPAGE (In, EA)
EA: Effective Address				

38.1.3 ENCLV Register Usage Summary

Table 38-3 summarizes the implicit register usage of virtualization operation enclave instructions.

Table 38-3. Register Usage of Virtualization Operation Enclave Instruction Leaf Functions

Instr. Leaf	EAX	RBX	RCX	RDX
EDECVIRTCHILD	00H (In)	EPCPAGE (In, EA)	SECS (In, EA)	
EINCVIRTCHILD	01H (In)	EPCPAGE (In, EA)	SECS (In, EA)	
ESETCONTEXT	02H (In)		EPCPAGE (In, EA)	Context Value (In, EA)
EA: Effective Address				

38.1.4 Information and Error Codes

Information and error codes are reported by various instruction leaf functions to show an abnormal termination of the instruction or provide information which may be useful to the developer. Table 38-4 shows the various codes and the instruction which generated the code. Details of the meaning of the code is provided in the individual instruction.

Table 38-4. Error or Information Codes for Intel® SGX Instructions

Name	Value	Returned By
No Error	0	
SGX_INVALID_SIG_STRUCT	1	EINIT
SGX_INVALID_ATTRIBUTE	2	EINIT, EGETKEY
SGX_BLKSTATE	3	EBLOCK
SGX_INVALID_MEASUREMENT	4	EINIT
SGX_NOTBLOCKABLE	5	EBLOCK
SGX_PG_INVLD	6	EBLOCK, ERDINFO, ETRACKC
SGX_EPC_PAGE_CONFLICT	7	EBLOCK, EMODPR, EMODT, ERDINFO , EDECVIRTCHILD, EINCVIRTCHILD, ELDBC, ELDUC, ESETCONTEXT, ETRACKC

Table 38-4. Error or Information Codes for Intel® SGX Instructions

Name	Value	Returned By
SGX_INVALID_SIGNATURE	8	EINIT
SGX_MAC_COMPARE_FAIL	9	ELDB, ELDU, ELDBC, ELDUC
SGX_PAGE_NOT_BLOCKED	10	EWB
SGX_NOT_TRACKED	11	EWB, EACCEPT
SGX_VA_SLOT_OCCUPIED	12	EWB
SGX_CHILD_PRESENT	13	EWB, EREMOVE
SGX_ENCLAVE_ACT	14	EREMOVE
SGX_ENTRYEPOCH_LOCKED	15	EBLOCK
SGX_INVALID_EINITTOKEN	16	EINIT
SGX_PREV_TRK_INCMPL	17	ETRACK, ETRACKC
SGX_PG_IS_SECS	18	EBLOCK
SGX_PAGE_ATTRIBUTES_MISMATCH	19	EACCEPT, EACCEPTCOPY
SGX_PAGE_NOT_MODIFIABLE	20	EMODPR, EMODT
SGX_PAGE_NOT_DEBUGGABLE	21	EDBGRD, EDBGWR
SGX_INVALID_COUNTER	25	EDECVIRTCHILD
SGX_PG_NONEPC	26	ERDINFO
SGX_TRACK_NOT_REQUIRED	27	ETRACKC
SGX_INVALID_CPUSVN	32	EINIT, EGETKEY
SGX_INVALID_ISVSVN	64	EGETKEY
SGX_UNMASKED_EVENT	128	EINIT
SGX_INVALID_KEYNAME	256	EGETKEY

38.1.5 Internal CREGs

The CREGs as shown in Table 5-4 are hardware specific registers used in this document to indicate values kept by the processor. These values are used while executing in enclave mode or while executing an Intel SGX instruction. These registers are not software visible and are implementation specific. The values in Table 38-5 appear at various places in the pseudo-code of this document. They are used to enhance understanding of the operations.

Table 38-5. List of Internal CREG

Name	Size (Bits)	Scope
CR_ENCLAVE_MODE	1	LP
CR_DBGOPTIN	1	LP
CR_TCS_LA	64	LP
CR_TCS_PA	64	LP
CR_ACTIVE_SECS	64	LP
CR_ELRANGE	128	LP
CR_SAVE_TF	1	LP
CR_SAVE_FS	64	LP
CR_GPR_PA	64	LP
CR_XSAVE_PAGE_n	64	LP
CR_SAVE_DR7	64	LP
CR_SAVE_PERF_GLOBAL_CTRL	64	LP

Table 38-5. List of Internal CREG

Name	Size (Bits)	Scope
CR_SAVE_DEBUGCTL	64	LP
CR_SAVE_PEBS_ENABLE	64	LP
CR_CPUSVN	128	PACKAGE
CR_SGXOWNEREPOCH	128	PACKAGE
CR_SAVE_XCR0	64	LP
CR_SGX_ATTRIBUTES_MASK	128	LP
CR_PAGING_VERSION	64	PACKAGE
CR_VERSION_THRESHOLD	64	PACKAGE
CR_NEXT_EID	64	PACKAGE
CR_BASE_PK	128	PACKAGE
CR_SEAL_FUSES	128	PACKAGE
CR_CET_SAVE_AREA_PA	64	LP
CR_ENCLAVE_SS_TOKEN_PA	64	LP
CR_SAVE_IA32_U_CET	64	LP
CR_SAVE_SSP	64	LP

38.1.6 Concurrent Operation Restrictions

Under certain conditions, Intel SGX disallows certain leaf functions from operating concurrently. Listed below are some examples of concurrency that are not allowed.

- For example, Intel SGX disallows the following leafs to concurrently operate on the same EPC page.
  - ECREATE, EADD, and EREMOVE are not allowed to operate on the same EPC page concurrently with themselves.
  - EADD, EEXTEND, and EINIT leaves are not allowed to operate on the same SECS concurrently.
- Intel SGX disallows the EREMOVE leaf from removing pages from an enclave that is in use.
- Intel SGX disallows entry (EENTER and ERESUME) to an enclave while a page from that enclave is being removed.

When disallowed operation is detected, a leaf function may do one of the following:

- Return an SGX_EPC_PAGE_CONFLICT error code in RAX.
- Cause a #GP(0) exception.

To prevent such exceptions, software must serialize leaf functions or prevent these leaf functions from accessing the same EPC page.

38.1.6.1 Concurrency Tables of Intel® SGX Instructions

The tables below detail the concurrent operation restrictions of all SGX leaf functions. For each leaf function, the table has a separate line for each of the EPC pages the leaf function accesses.

For each such EPC page, the base concurrency requirements are detailed as follows:

- **Exclusive Access** means that no other leaf function that requires either shared or exclusive access to the same EPC page may be executed concurrently. For example, EADD requires an exclusive access to the target page it accesses.
- **Shared Access** means that no other leaf function that requires an exclusive access to the same EPC page may be executed concurrently. Other leaf functions that require shared access may run concurrently. For example, EADD requires a shared access to the SECS page it accesses.

- **Concurrent Access** means that any other leaf function that requires any access to the same EPC page may be executed concurrently. For example, EGETKEY has no concurrency requirements for the KEYREQUEST page.

In addition to the base concurrency requirements, additional concurrency requirements are listed, which apply only to specific sets of leaf functions. For example, there are additional requirements that apply for EADD, EXTEND, and EINIT. EADD and EEXTEND can't execute concurrently on the same SECS page.

The tables also detail the leaf function's behavior when a conflict happens, i.e., a concurrency requirement is not met. In this case, the leaf function may return an SGX_EPC_PAGE_CONFLICT error code in RAX, or it may cause an exception. In addition, the tables detail those conflicts where a VM Exit may be triggered, and list the Exit Qualification code that is provided in such cases.

Table 38-6. Base Concurrency Restrictions

Leaf	Parameter		Base Concurrency Restrictions		
			Access	On Conflict	SGX_CONFLICT VM Exit Qualification
EACCEPT	Target	[DS:RCX]	Shared	#GP	
	SECINFO	[DS:RBX]	Concurrent		
EACCEPTCOPY	Target	[DS:RCX]	Concurrent		
	Source	[DS:RDX]	Concurrent		
	SECINFO	[DS:RBX]	Concurrent		
EADD	Target	[DS:RCX]	Exclusive	#GP	EPC_PAGE_CONFLICT_EXCEPTION
	SECS	[DS:RBX]PAGEINFO.SECS	Shared	#GP	
EAUG	Target	[DS:RCX]	Exclusive	#GP	EPC_PAGE_CONFLICT_EXCEPTION
	SECS	[DS:RBX]PAGEINFO.SECS	Shared	#GP	
EBLOCK	Target	[DS:RCX]	Shared	SGX_EPC_PAGE_CONFLICT	
ECREATE	SECS	[DS:RCX]	Exclusive	#GP	EPC_PAGE_CONFLICT_EXCEPTION
EDBGRD	Target	[DS:RCX]	Shared	#GP	
EDBGWR	Target	[DS:RCX]	Shared	#GP	
EDECVIRTCHILD	Target	[DS:RBX]	Shared	SGX_EPC_PAGE_CONFLICT	
	SECS	[DS:RCX]	Concurrent		
EENTERTCS	SECS	[DS:RBX]	Shared	#GP	
EEXIT			Concurrent		
EEXTEND	Target	[DS:RCX]	Shared	#GP	
	SECS	[DS:RBX]	Concurrent		
EGETKEY	KEYREQUEST	[DS:RBX]	Concurrent		
	OUTPUTDATA	[DS:RCX]	Concurrent		
EINCVIRTCHILD	Target	[DS:RBX]	Shared	SGX_EPC_PAGE_CONFLICT	
	SECS	[DS:RCX]	Concurrent		
EINIT	SECS	[DS:RCX]	Shared	#GP	
ELDB/ELDU	Target	[DS:RCX]	Exclusive	#GP	EPC_PAGE_CONFLICT_EXCEPTION
	VA	[DS:RDX]	Shared	#GP	
	SECS	[DS:RBX]PAGEINFO.SECS	Shared	#GP	

Table 38-6. Base Concurrency Restrictions

Leaf	Parameter		Base Concurrency Restrictions		
			Access	On Conflict	SGX_CONFLICT VM Exit Qualification
EDLBC/ELDUC	Target	[DS:RCX]	Exclusive	SGX_EPC_PAGE_CONFLICT	EPC_PAGE_CONFLICT_ERROR
	VA	[DS:RDX]	Shared	SGX_EPC_PAGE_CONFLICT	
	SECS	[DS:RBX]PAGEINFO.SECS	Shared	SGX_EPC_PAGE_CONFLICT	
EMODPE	Target	[DS:RCX]	Concurrent		
	SECINFO	[DS:RBX]	Concurrent		
EMODPR	Target	[DS:RCX]	Shared	#GP	
EMODT	Target	[DS:RCX]	Exclusive	SGX_EPC_PAGE_CONFLICT	EPC_PAGE_CONFLICT_ERROR
EPA	VA	[DS:RCX]	Exclusive	#GP	EPC_PAGE_CONFLICT_EXCEPTION
ERDINFO	Target	[DS:RCX]	Shared	SGX_EPC_PAGE_CONFLICT	
EREMOVE	Target	[DS:RCX]	Exclusive	#GP	EPC_PAGE_CONFLICT_EXCEPTION
EREPORT	TARGETINFO	[DS:RBX]	Concurrent		
	REPORTDATA	[DS:RCX]	Concurrent		
	OUTPUTDATA	[DS:RDX]	Concurrent		
ERESUME	TCS	[DS:RBX]	Shared	#GP	
ESETCONTEXT	SECS	[DS:RCX]	Shared	SGX_EPC_PAGE_CONFLICT	
ETRACK	SECS	[DS:RCX]	Shared	#GP	
ETRACKC	Target	[DS:RCX]	Shared	SGX_EPC_PAGE_CONFLICT	
	SECS	Implicit	Concurrent		
EWB	Source	[DS:RCX]	Exclusive	#GP	EPC_PAGE_CONFLICT_EXCEPTION
	VA	[DS:RDX]	Shared	#GP	

Table 38-7. Additional Concurrency Restrictions

Leaf	Parameter		Additional Concurrency Restrictions					
			vs. EACCEPT, EACCEPTCOPY, EMODPE, EMODPR, EMODT		vs. EADD, EEXTEND, EINIT		vs. ETRACK, ETRACKC	
			Access	On Conflict	Access	On Conflict	Access	On Conflict
EACCEPT	Target	[DS:RCX]	Exclusive	#GP	Concurrent		Concurrent	
	SECINFO	[DS:RBX]	Concurrent		Concurrent		Concurrent	
EACCEPTCOPY	Target	[DS:RCX]	Exclusive	#GP	Concurrent		Concurrent	
	Source	[DS:RDX]	Concurrent		Concurrent		Concurrent	
	SECINFO	[DS:RBX]	Concurrent		Concurrent		Concurrent	

Table 38-7. Additional Concurrency Restrictions

Leaf	Parameter		Additional Concurrency Restrictions					
			vs. EACCEPT, EACCEPTCOPY, EMODPE, EMODPR, EMODT		vs. EADD, EEXTEND, EINIT		vs. ETRACK, ETRACKC	
			Access	On Conflict	Access	On Conflict	Access	On Conflict
EADD	Target	[DS:RCX]	Concurrent		Concurrent		Concurrent	
	SECS	[DS:RBX]PAGEINFO.SECS	Concurrent		Exclusive	#GP	Concurrent	
EAUG	Target	[DS:RCX]	Concurrent		Concurrent		Concurrent	
	SECS	[DS:RBX]PAGEINFO.SECS	Concurrent		Concurrent		Concurrent	
EBLOCK	Target	[DS:RCX]	Concurrent		Concurrent		Concurrent	
ECREATE	SECS	[DS:RCX]	Concurrent		Concurrent		Concurrent	
EDBGRD	Target	[DS:RCX]	Concurrent		Concurrent		Concurrent	
EDBGWR	Target	[DS:RCX]	Concurrent		Concurrent		Concurrent	
EDECVIRTCHILD	Target	[DS:RBX]	Concurrent		Concurrent		Concurrent	
	SECS	[DS:RCX]	Concurrent		Concurrent		Concurrent	
EENTERTCS	SECS	[DS:RBX]	Concurrent		Concurrent		Concurrent	
EEXIT			Concurrent		Concurrent		Concurrent	
EEXTEND	Target	[DS:RCX]	Concurrent		Concurrent		Concurrent	
	SECS	[DS:RBX]	Concurrent		Exclusive	#GP	Concurrent	
EGETKEY	KEYREQUEST	[DS:RBX]	Concurrent		Concurrent		Concurrent	
	OUTPUTDATA	[DS:RCX]	Concurrent		Concurrent		Concurrent	
EINCVIRTCHILD	Target	[DS:RBX]	Concurrent		Concurrent		Concurrent	
	SECS	[DS:RCX]	Concurrent		Concurrent		Concurrent	
EINIT	SECS	[DS:RCX]	Concurrent		Exclusive	#GP	Concurrent	
ELDB/ELDU	Target	[DS:RCX]	Concurrent		Concurrent		Concurrent	
	VA	[DS:RDX]	Concurrent		Concurrent		Concurrent	
	SECS	[DS:RBX]PAGEINFO.SECS	Concurrent		Concurrent		Concurrent	
EDLBC/ELDUC	Target	[DS:RCX]	Concurrent		Concurrent		Concurrent	
	VA	[DS:RDX]	Concurrent		Concurrent		Concurrent	
	SECS	[DS:RBX]PAGEINFO.SECS	Concurrent		Concurrent		Concurrent	
EMODPE	Target	[DS:RCX]	Exclusive	#GP	Concurrent		Concurrent	
	SECINFO	[DS:RBX]	Concurrent		Concurrent		Concurrent	
EMODPR	Target	[DS:RCX]	Exclusive	SGX_EPC_PAGE_CONFLICT	Concurrent		Concurrent	
EMODT	Target	[DS:RCX]	Exclusive	SGX_EPC_PAGE_CONFLICT	Concurrent		Concurrent	
EPA	VA	[DS:RCX]	Concurrent		Concurrent		Concurrent	

Table 38-7. Additional Concurrency Restrictions

Leaf	Parameter		Additional Concurrency Restrictions					
			vs. EACCEPT, EACCEPTCOPY, EMODPE, EMODPR, EMODT		vs. EADD, EEXTEND, EINIT		vs. ETRACK, ETRACKC	
			Access	On Conflict	Access	On Conflict	Access	On Conflict
ERDINFO	Target	[DS:RCX]	Concurrent		Concurrent		Concurrent	
EREMOVE	Target	[DS:RCX]	Concurrent		Concurrent		Concurrent	
EREPORT	TARGETINFO	[DS:RBX]	Concurrent		Concurrent		Concurrent	
	REPORTDATA	[DS:RCX]	Concurrent		Concurrent		Concurrent	
	OUTPUTDATA	[DS:RDX]	Concurrent		Concurrent		Concurrent	
ERESUME	TCS	[DS:RBX]	Concurrent		Concurrent		Concurrent	
ESETCONTEXT	SECS	[DS:RCX]	Concurrent		Concurrent		Concurrent	
ETRACK	SECS	[DS:RCX]	Concurrent		Concurrent		Exclusive	SGX_EPC_PAGE_CONFLICT[1]
ETRACKC	Target	[DS:RCX]	Concurrent		Concurrent		Concurrent	
	SECS	Implicit	Concurrent		Concurrent		Exclusive	SGX_EPC_PAGE_CONFLICT[1]
EWB	Source	[DS:RCX]	Concurrent		Concurrent		Concurrent	
	VA	[DS:RDX]	Concurrent		Concurrent		Concurrent	

NOTES:

1. SGX_CONFLICT VM Exit Qualification =TRACKING_RESOURCE_CONFLICT.

38.2 INTEL® SGX INSTRUCTION REFERENCE

ENCLS—Execute an Enclave System Function of Specified Leaf Number

Opcode/ Instruction	Op/En	64/32 bit Mode Support	CPUID Feature Flag	Description
NP 0F 01 CF ENCLS	ZO	V/V	NA	This instruction is used to execute privileged Intel SGX leaf functions that are used for managing and debugging the enclaves.

Instruction Operand Encoding

Op/En	Operand 1	Operand 2	Operand 3	Implicit Register Operands
ZO	NA	NA	NA	See Section 38.3

Description

The ENCLS instruction invokes the specified privileged Intel SGX leaf function for managing and debugging enclaves. Software specifies the leaf function by setting the appropriate value in the register EAX as input. The registers RBX, RCX, and RDX have leaf-specific purpose, and may act as input, as output, or may be unused. In 64-bit mode, the instruction ignores upper 32 bits of the RAX register.

The ENCLS instruction produces an invalid-opcode exception (#UD) if CR0.PE = 0 or RFLAGS.VM = 1, or if it is executed in system-management mode (SMM). Additionally, any attempt to execute the instruction when CPL > 0 results in #UD. The instruction produces a general-protection exception (#GP) if CR0.PG = 0 or if an attempt is made to invoke an undefined leaf function.

In VMX non-root operation, execution of ENCLS may cause a VM exit if the "enable ENCLS exiting" VM-execution control is 1. In this case, execution of individual leaf functions of ENCLS is governed by the ENCLS-exiting bitmap field in the VMCS. Each bit in that field corresponds to the index of an ENCLS leaf function (as provided in EAX).

Software in VMX root operation can thus intercept the invocation of various ENCLS leaf functions in VMX non-root operation by setting the "enable ENCLS exiting" VM-execution control and setting the corresponding bits in the ENCLS-exiting bitmap.

Addresses and operands are 32 bits outside 64-bit mode (IA32_EFER.LMA = 0 || CS.L = 0) and are 64 bits in 64-bit mode (IA32_EFER.LMA = 1 || CS.L = 1). CS.D value has no impact on address calculation. The DS segment is used to create linear addresses.

Segment override prefixes and address-size override prefixes are ignored, and is the REX prefix in 64-bit mode.

Operation

```
IF TSX_ACTIVE
    THEN GOTO TSX_ABORT_PROCESSING; FI;

IF CR0.PE = 0 or RFLAGS.VM = 1 or in SMM or CPUID.SGX_LEAF.0:EAX.SE1 = 0
    THEN #UD; FI;

IF (CPL > 0)
    THEN #UD; FI;

IF in VMX non-root operation and the "enable ENCLS exiting" VM-execution control is 1
    THEN
        IF EAX < 63 and ENCLS_exiting_bitmap[EAX] = 1 or EAX> 62 and ENCLS_exiting_bitmap[63] = 1
            THEN VM exit;
        FI;
FI;
IF IA32_FEATURE_CONTROL.LOCK = 0 or IA32_FEATURE_CONTROL.SGX_ENABLE = 0
    THEN #GP(0); FI;

IF (EAX is an invalid leaf number)
    THEN #GP(0); FI;
```

```
IF CR0.PG = 0
    THEN #GP(0); FI;

(* DS must not be an expanded down segment *)
IF not in 64-bit mode and DS.Type is expand-down data
    THEN #GP(0); FI;

Jump to leaf specific flow
```

Flags Affected

See individual leaf functions

Protected Mode Exceptions

#UD	If any of the LOCK/66H/REP/VEX prefixes are used.
	If current privilege level is not 0.
	If CPUID.(EAX=12H,ECX=0):EAX.SGX1 [bit 0] = 0.
	If logical processor is in SMM.
#GP(0)	If IA32_FEATURE_CONTROL.LOCK = 0.
	If IA32_FEATURE_CONTROL.SGX_ENABLE = 0.
	If input value in EAX encodes an unsupported leaf.
	If data segment expand down.
	If CR0.PG=0.

Real-Address Mode Exceptions

#UD	ENCLS is not recognized in real mode.

Virtual-8086 Mode Exceptions

#UD	ENCLS is not recognized in virtual-8086 mode.

Compatibility Mode Exceptions

Same exceptions as in protected mode.

64-Bit Mode Exceptions

#UD	If any of the LOCK/66H/REP/VEX prefixes are used.
	If current privilege level is not 0.
	If CPUID.(EAX=12H,ECX=0):EAX.SGX1 [bit 0] = 0.
	If logical processor is in SMM.
#GP(0)	If IA32_FEATURE_CONTROL.LOCK = 0.
	If IA32_FEATURE_CONTROL.SGX_ENABLE = 0.
	If input value in EAX encodes an unsupported leaf.

ENCLU—Execute an Enclave User Function of Specified Leaf Number

Opcode/ Instruction	Op/En	64/32 bit Mode Support	CPUID Feature Flag	Description
NP 0F 01 D7 ENCLU	ZO	V/V	NA	This instruction is used to execute non-privileged Intel SGX leaf functions.

Instruction Operand Encoding

Op/En	Operand 1	Operand 2	Operand 3	Implicit Register Operands
ZO	NA	NA	NA	See Section 38.4

Description

The ENCLU instruction invokes the specified non-privileged Intel SGX leaf functions. Software specifies the leaf function by setting the appropriate value in the register EAX as input. The registers RBX, RCX, and RDX have leaf-specific purpose, and may act as input, as output, or may be unused. In 64-bit mode, the instruction ignores upper 32 bits of the RAX register.

The ENCLU instruction produces an invalid-opcode exception (#UD) if CR0.PE = 0 or RFLAGS.VM = 1, or if it is executed in system-management mode (SMM). Additionally, any attempt to execute this instruction when CPL < 3 results in #UD. The instruction produces a general-protection exception (#GP) if either CR0.PG or CR0.NE is 0, or if an attempt is made to invoke an undefined leaf function. The ENCLU instruction produces a device not available exception (#NM) if CR0.TS = 1.

Addresses and operands are 32 bits outside 64-bit mode (IA32_EFER.LMA = 0 or CS.L = 0) and are 64 bits in 64-bit mode (IA32_EFER.LMA = 1 and CS.L = 1). CS.D value has no impact on address calculation. The DS segment is used to create linear addresses.

Segment override prefixes and address-size override prefixes are ignored, as is the REX prefix in 64-bit mode.

Operation

```
IN_64BIT_MODE := 0;
IF TSX_ACTIVE
    THEN GOTO TSX_ABORT_PROCESSING; FI;

(* If enclosing app has CET indirect branch tracking enabled then if it is not ERESUME leaf cause a #CP fault *)
(* If the ERESUME is not successful it will leave tracker in WAIT_FOR_ENDBRANCH *)
TRACKER = (CPL == 3) ? IA32_U_CET.TRACKER : IA32_S_CET.TRACKER
IF EndbranchEnabledAndNotSuppressed(CPL) and TRACKER = WAIT_FOR_ENDBRANCH and
  (EAX != ERESUME or CR0.TS or (in SMM) or (CPUID.SGX_LEAF.0:EAX.SE1 = 0) or (CPL < 3))
    THEN
        Handle CET State machine violation      (* see Section 17.3.6, "Legacy Compatibility Treatment" in the
                                                   Intel® 64 and IA-32 Architectures Software Developer's Manual, Volume 1. *)
FI;

IF CR0.PE= 0 or RFLAGS.VM = 1 or in SMM or CPUID.SGX_LEAF.0:EAX.SE1 = 0
    THEN #UD; FI;

IF CR0.TS = 1
    THEN #NM; FI;

IF CPL < 3
    THEN #UD; FI;

IF IA32_FEATURE_CONTROL.LOCK = 0 or IA32_FEATURE_CONTROL.SGX_ENABLE = 0
    THEN #GP(0); FI;
```

```
IF EAX is invalid leaf number
    THEN #GP(0); FI;

IF CR0.PG = 0 or CR0.NE = 0
    THEN #GP(0); FI;

IN_64BIT_MODE := IA32_EFER.LMA AND CS.L ? 1 : 0;
(* Check not in 16-bit mode and DS is not a 16-bit segment *)
IF not in 64-bit mode and CS.D = 0
    THEN #GP(0); FI;

IF CR_ENCLAVE_MODE = 1 and (EAX = 2 or EAX = 3) (* EENTER or ERESUME *)
    THEN #GP(0); FI;

IF CR_ENCLAVE_MODE = 0 and (EAX = 0 or EAX = 1 or EAX = 4 or EAX = 5 or EAX = 6 or EAX = 7)
(* EREPORT, EGETKEY, EEXIT, EACCEPT, EMODPE, or EACCEPTCOPY *)
    THEN #GP(0); FI;

Jump to leaf specific flow
```

Flags Affected

See individual leaf functions

Protected Mode Exceptions

#UD	If any of the LOCK/66H/REP/VEX prefixes are used.
	If current privilege level is not 3.
	If CPUID.(EAX=12H,ECX=0):EAX.SGX1 [bit 0] = 0.
	If logical processor is in SMM.
#GP(0)	If IA32_FEATURE_CONTROL.LOCK = 0.
	If IA32_FEATURE_CONTROL.SGX_ENABLE = 0.
	If input value in EAX encodes an unsupported leaf.
	If input value in EAX encodes EENTER/ERESUME and ENCLAVE_MODE = 1.
	If input value in EAX encodes EGETKEY/EREPORT/EEXIT/EACCEPT/EACCEPTCOPY/EMODPE and ENCLAVE_MODE = 0.
	If operating in 16-bit mode.
	If data segment is in 16-bit mode.
	If CR0.PG = 0 or CR0.NE= 0.
#NM	If CR0.TS = 1.

Real-Address Mode Exceptions

#UD	ENCLS is not recognized in real mode.

Virtual-8086 Mode Exceptions

#UD	ENCLS is not recognized in virtual-8086 mode.

Compatibility Mode Exceptions

Same exceptions as in protected mode.

64-Bit Mode Exceptions

#UD	If any of the LOCK/66H/REP/VEX prefixes are used.
	If current privilege level is not 3.
	If CPUID.(EAX=12H,ECX=0):EAX.SGX1 [bit 0] = 0.
	If logical processor is in SMM.
#GP(0)	If IA32_FEATURE_CONTROL.LOCK = 0.
	If IA32_FEATURE_CONTROL.SGX_ENABLE = 0.
	If input value in EAX encodes an unsupported leaf.
	If input value in EAX encodes EENTER/ERESUME and ENCLAVE_MODE = 1.
	If input value in EAX encodes EGETKEY/EREPORT/EEXIT/EACCEPT/EACCEPTCOPY/EMODPE and ENCLAVE_MODE = 0.
	If CR0.NE= 0.
#NM	If CR0.TS = 1.

ENCLV—Execute an Enclave VMM Function of Specified Leaf Number

Opcode/ Instruction	Op/En	64/32 bit Mode Support	CPUID Feature Flag	Description
NP 0F 01 C0 ENCLV	ZO	V/V	NA	This instruction is used to execute privileged SGX leaf functions that are reserved for VMM use. They are used for managing the enclaves.

Instruction Operand Encoding

Op/En	Operand 1	Operand 2	Operand 3	Implicit Register Operands
ZO	NA	NA	NA	See Section 38.3

Description

The ENCLV instruction invokes the virtualization SGX leaf functions for managing enclaves in a virtualized environment. Software specifies the leaf function by setting the appropriate value in the register EAX as input. The registers RBX, RCX, and RDX have leaf-specific purpose, and may act as input, as output, or may be unused. In non 64-bit mode, the instruction ignores upper 32 bits of the RAX register.

The ENCLV instruction produces an invalid-opcode exception (#UD) if CR0.PE = 0 or RFLAGS.VM = 1, if it is executed in system-management mode (SMM), or not in VMX operation. Additionally, any attempt to execute the instruction when CPL > 0 results in #UD. The instruction produces a general-protection exception (#GP) if CR0.PG = 0 or if an attempt is made to invoke an undefined leaf function.

Software in VMX root mode of operation can enable execution of the ENCLV instruction in VMX non-root mode by setting enable ENCLV execution control in the VMCS. If enable ENCLV execution control in the VMCS is clear, execution of the ENCLV instruction in VMX non-root mode results in #UD.

When execution of ENCLV instruction in VMX non-root mode is enabled, software in VMX root operation can intercept the invocation of various ENCLV leaf functions in VMX non-root operation by setting the corresponding bits in the ENCLV-exiting bitmap.

Addresses and operands are 32 bits in 32-bit mode (IA32_EFER.LMA == 0 || CS.L == 0) and are 64 bits in 64-bit mode (IA32_EFER.LMA == 1 && CS.L == 1). CS.D value has no impact on address calculation.

Segment override prefixes and address-size override prefixes are ignored, as is the REX prefix in 64-bit mode.

Operation

```
IF TSX_ACTIVE
    THEN GOTO TSX_ABORT_PROCESSING; FI;

IF CR0.PE = 0 or RFLAGS.VM = 1 or in SMM or CPUID.SGX_LEAF.0:EAX.OSS = 0
    THEN #UD; FI;

IF not in VMX Operation or (IA32_EFER.LMA = 1 and CS.L = 0)
    THEN #UD; FI;

IF (CPL > 0)
    THEN #UD; FI;

IF in VMX non-root operation
  IF "enable ENCLV exiting" VM-execution control is 1
    THEN
      IF EAX < 63 and ENCLV_exiting_bitmap[EAX] = 1 or EAX> 62 and ENCLV_exiting_bitmap[63] = 1
          THEN VM exit;
      FI;
  ELSE
    #UD; FI;
```

```
FI;

IF IA32_FEATURE_CONTROL.LOCK = 0 or IA32_FEATURE_CONTROL.SGX_ENABLE = 0
    THEN #GP(0); FI;

IF (EAX is an invalid leaf number)
    THEN #GP(0); FI;

IF CR0.PG = 0
    THEN #GP(0); FI;

(* DS must not be an expanded down segment *)
IF not in 64-bit mode and DS.Type is expand-down data
    THEN #GP(0); FI;

Jump to leaf specific flow
```

Flags Affected

See individual leaf functions.

Protected Mode Exceptions

#UD	If any of the LOCK/66H/REP/VEX prefixes are used.
	If current privilege level is not 0.
	If CPUID.(EAX=12H,ECX=0):EAX.OSS [bit 5] = 0.
	If logical processor is in SMM.
#GP(0)	If IA32_FEATURE_CONTROL.LOCK = 0.
	If IA32_FEATURE_CONTROL.SGX_ENABLE = 0.
	If input value in EAX encodes an unsupported leaf.
	If data segment expand down.
	If CR0.PG=0.

Real-Address Mode Exceptions

#UD	ENCLV is not recognized in real mode.

Virtual-8086 Mode Exceptions

#UD	ENCLV is not recognized in virtual-8086 mode.

Compatibility Mode Exceptions

Same exceptions as in protected mode.

64-Bit Mode Exceptions

#UD	If any of the LOCK/66H/REP/VEX prefixes are used.
	If current privilege level is not 0.
	If CPUID.(EAX=12H,ECX=0):EAX.OSS [bit 5] = 0.
	If logical processor is in SMM.
#GP(0)	If IA32_FEATURE_CONTROL.LOCK = 0.
	If IA32_FEATURE_CONTROL.SGX_ENABLE = 0.
	If input value in EAX encodes an unsupported leaf.

38.3 INTEL® SGX SYSTEM LEAF FUNCTION REFERENCE

Leaf functions available with the ENCLS instruction mnemonic are covered in this section. In general, each instruction leaf requires EAX to specify the leaf function index and/or additional implicit registers specifying leaf-specific input parameters. An instruction operand encoding table provides details of each implicit register usage and associated input/output semantics.

In many cases, an input parameter specifies an effective address associated with a memory object inside or outside the EPC, the memory addressing semantics of these memory objects are also summarized in a separate table.

EADD—Add a Page to an Uninitialized Enclave

Opcode/ Instruction	Op/En	64/32 bit Mode Support	CPUID Feature Flag	Description
EAX = 01H ENCLS[EADD]	IR	V/V	SGX1	This leaf function adds a page to an uninitialized enclave.

Instruction Operand Encoding

Op/En	EAX	RBX	RCX
IR	EADD (In)	Address of a PAGEINFO (In)	Address of the destination EPC page (In)

Description

This leaf function copies a source page from non-enclave memory into the EPC, associates the EPC page with an SECS page residing in the EPC, and stores the linear address and security attributes in EPCM. As part of the association, the enclave offset and the security attributes are measured and extended into the SECS.MRENCLAVE. This instruction can only be executed when current privilege level is 0.

RBX contains the effective address of a PAGEINFO structure while RCX contains the effective address of an EPC page. The table below provides additional information on the memory parameter of EADD leaf function.

EADD Memory Parameter Semantics

PAGEINFO	PAGEINFO.SECS	PAGEINFO.SRCPGE	PAGEINFO.SECINFO	EPCPAGE
Read access permitted by Non Enclave	Read/Write access permitted by Enclave	Read access permitted by Non Enclave	Read access permitted by Non Enclave	Write access permitted by Enclave

The instruction faults if any of the following:

EADD Faulting Conditions

The operands are not properly aligned.	Unsupported security attributes are set.
Refers to an invalid SECS.	Reference is made to an SECS that is locked by another thread.
The EPC page is locked by another thread.	RCX does not contain an effective address of an EPC page.
The EPC page is already valid.	If security attributes specifies a TCS and the source page specifies unsupported TCS values or fields.
The SECS has been initialized.	The specified enclave offset is outside of the enclave address space.

Concurrency Restrictions

Table 38-8. Base Concurrency Restrictions of EADD

Leaf	Parameter	Base Concurrency Restrictions		
		Access	On Conflict	SGX_CONFLICT VM Exit Qualification
EADD	Target [DS:RCX]	Exclusive	#GP	EPC_PAGE_CONFLICT_EXCEPTION
	SECS [DS:RBX]PAGEINFO.SECS	Shared	#GP	

Table 38-9. Additional Concurrency Restrictions of EADD

Leaf	Parameter	Additional Concurrency Restrictions					
		vs. EACCEPT, EACCEPTCOPY, EMODPE, EMODPR, EMODT		vs. EADD, EEXTEND, EINIT		vs. ETRACK, ETRACKC	
		Access	On Conflict	Access	On Conflict	Access	On Conflict
EADD	Target [DS:RCX]	Concurrent		Concurrent		Concurrent	
	SECS [DS:RBX]PAGE-INFO.SECS	Concurrent		Exclusive	#GP	Concurrent	

Operation

Temp Variables in EADD Operational Flow

Name	Type	Size (bits)	Description
TMP_SRCPGE	Effective Address	32/64	Effective address of the source page.
TMP_SECS	Effective Address	32/64	Effective address of the SECS destination page.
TMP_SECINFO	Effective Address	32/64	Effective address of an SECINFO structure which contains security attributes of the page to be added.
SCRATCH_SECINFO	SECINFO	512	Scratch storage for holding the contents of DS:TMP_SECINFO.
TMP_LINADDR	Unsigned Integer	64	Holds the linear address to be stored in the EPCM and used to calculate TMP_ENCLAVEOFFSET.
TMP_ENCLAVEOFFSET	Enclave Offset	64	The page displacement from the enclave base address.
TMPUPDATEFIELD	SHA256 Buffer	512	Buffer used to hold data being added to TMP_SECS.MRENCLAVE.

```
IF (DS:RBX is not 32Byte Aligned)
    THEN #GP(0); FI;

IF (DS:RCX is not 4KByte Aligned)
    THEN #GP(0); FI;

IF (DS:RCX does not resolve within an EPC)
    THEN #PF(DS:RCX); FI;

TMP_SRCPGE := DS:RBX.SRCPGE;
TMP_SECS := DS:RBX.SECS;
TMP_SECINFO := DS:RBX.SECINFO;
TMP_LINADDR := DS:RBX.LINADDR;

IF (DS:TMP_SRCPGE is not 4KByte aligned or DS:TMP_SECS is not 4KByte aligned or
    DS:TMP_SECINFO is not 64Byte aligned or TMP_LINADDR is not 4KByte aligned)
    THEN #GP(0); FI;

IF (DS:TMP_SECS does not resolve within an EPC)
    THEN #PF(DS:TMP_SECS); FI;

SCRATCH_SECINFO := DS:TMP_SECINFO;

(* Check for misconfigured SECINFO flags*)
IF (SCRATCH_SECINFO reserved fields are not zero or
```

```
    ! (SCRATCH_SECINFO.FLAGS.PT is PT_REG or SCRATCH_SECINFO.FLAGS.PT is PT_TCS or
    (SCRATCH_SECINFO.FLAGS.PT is PT_SS_FIRST and CPUID.(EAX=12H, ECX=1):EAX[6] = 1) or
    (SCRATCH_SECINFO.FLAGS.PT is PT_SS_REST and CPUID.(EAX=12H, ECX=1):EAX[6] = 1)) )
    THEN #GP(0); FI;

(* If PT_SS_FIRST/PT_SS_REST page types are requested then CR4.CET must be 1 *)
IF ( (SCRATCH_SECINFO.FLAGS.PT is PT_SS_FIRST OR
    SCRATCH_SECINFO.FLAGS.PT is PT_SS_REST) AND CR4.CET == 0)
    THEN #GP(0); FI;

(* Check the EPC page for concurrency *)
IF (EPC page is not available for EADD)
    THEN
        IF (<<VMX non-root operation>> AND <<ENABLE_EPC_VIRTUALIZATION_EXTENSIONS>>)
            THEN
                VMCS.Exit_reason := SGX_CONFLICT;
                VMCS.Exit_qualification.code := EPC_PAGE_CONFLICT_EXCEPTION;
                VMCS.Exit_qualification.error := 0;
                VMCS.Guest-physical_address := << translation of DS:RCX produced by paging >>;
                VMCS.Guest-linear_address := DS:RCX;
            Deliver VMEXIT;
            ELSE
                #GP(0);
        FI;
FI;

IF (EPCM(DS:RCX).VALID ≠ 0)
    THEN #PF(DS:RCX); FI;

(* Check the SECS for concurrency *)
IF (SECS is not available for EADD)
    THEN #GP(0); FI;

IF (EPCM(DS:TMP_SECS).VALID = 0 or EPCM(DS:TMP_SECS).PT ≠ PT_SECS)
    THEN #PF(DS:TMP_SECS); FI;

(* Copy 4KBytes from source page to EPC page*)
DS:RCX[32767:0] := DS:TMP_SRCPGE[32767:0];

CASE (SCRATCH_SECINFO.FLAGS.PT)

    PT_TCS:
        IF (DS:RCX.RESERVED ≠ 0) #GP(0); FI;
        IF ( (DS:TMP_SECS.ATTRIBUTES.MODE64BIT = 0) and
            ((DS:TCS.FSLIMIT & 0FFFFH ≠ 0FFFFH) or (DS:TCS.GSLIMIT & 0FFFFH ≠ 0FFFFH) )) #GP(0); FI;
        (* Ensure TCS.PREVSSP is zero *)
        IF (CPUID.(EAX=07H, ECX=00h):ECX[CET_SS] = 1) and (DS:RCX.PREVSSP != 0) #GP(0); FI;
        BREAK;
    PT_REG:
        IF (SCRATCH_SECINFO.FLAGS.W = 1 and SCRATCH_SECINFO.FLAGS.R = 0) #GP(0); FI;
        BREAK;
    PT_SS_FIRST:
    PT_SS_REST:
    (* SS pages cannot created on first or last page of ELRANGE *)
```

```
    IF ( TMP_LINADDR = DS:TMP_SECS.BASEADDR or TMP_LINADDR = (DS:TMP_SECS.BASEADDR + DS:TMP_SECS.SIZE - 0x1000) )
        THEN #GP(0); FI;
    IF ( DS:RCX[4087:0] != 0 ) #GP(0); FI;
    IF (SCRATCH_SECINFO.FLAGS.PT == PT_SS_FIRST)
        THEN
            (* Check that valid RSTORSSP token exists *)
            IF ( DS:RCX[4095:4088] != ((TMP_LINADDR + 0x1000) | DS:TMP_SECS.ATTRIBUTES.MODE64BIT) ) #GP(0); FI;
            (* Check the 8 bytes are zero *)
            IF ( DS:RCX[4095:4088] != 0 ) #GP(0); FI;
    FI;
    IF (SCRATCH_SECINFO.FLAGS.W = 0 OR SCRATCH_SECINFO.FLAGS.R = 0 OR
     SCRATCH_SECINFO.FLAGS.X = 1) #GP(0); FI;
        BREAK;
ESAC;

(* Check the enclave offset is within the enclave linear address space *)
IF (TMP_LINADDR < DS:TMP_SECS.BASEADDR or TMP_LINADDR ≥ DS:TMP_SECS.BASEADDR + DS:TMP_SECS.SIZE)
    THEN #GP(0); FI;

(* Check concurrency of measurement resource*)
IF (Measurement being updated)
    THEN #GP(0); FI;

(* Check if the enclave to which the page will be added is already in Initialized state *)
IF (DS:TMP_SECS already initialized)
    THEN #GP(0); FI;

(* For TCS pages, force EPCM.rwx bits to 0 and no debug access *)
IF (SCRATCH_SECINFO.FLAGS.PT = PT_TCS)
    THEN
        SCRATCH_SECINFO.FLAGS.R := 0;
        SCRATCH_SECINFO.FLAGS.W := 0;
        SCRATCH_SECINFO.FLAGS.X := 0;
        (DS:RCX).FLAGS.DBGOPTIN := 0; // force TCS.FLAGS.DBGOPTIN off
        DS:RCX.CSSA := 0;
        DS:RCX.AEP := 0;
        DS:RCX.STATE := 0;
FI;

(* Add enclave offset and security attributes to MRENCLAVE *)
TMP_ENCLAVEOFFSET := TMP_LINADDR - DS:TMP_SECS.BASEADDR;
TMPUPDATEFIELD[63:0] := 0000000044444145H; // "EADD"
TMPUPDATEFIELD[127:64] := TMP_ENCLAVEOFFSET;
TMPUPDATEFIELD[511:128] := SCRATCH_SECINFO[375:0]; // 48 bytes
DS:TMP_SECS.MRENCLAVE := SHA256UPDATE(DS:TMP_SECS.MRENCLAVE, TMPUPDATEFIELD)
INC enclave's MRENCLAVE update counter;

(* Add enclave offset and security attributes to MRENCLAVE *)
EPCM(DS:RCX).R := SCRATCH_SECINFO.FLAGS.R;
EPCM(DS:RCX).W := SCRATCH_SECINFO.FLAGS.W;
EPCM(DS:RCX).X := SCRATCH_SECINFO.FLAGS.X;
EPCM(DS:RCX).PT := SCRATCH_SECINFO.FLAGS.PT;
EPCM(DS:RCX).ENCLAVEADDRESS := TMP_LINADDR;
```

```
(* associate the EPCPAGE with the SECS by storing the SECS identifier of DS:TMP_SECS *)
Update EPCM(DS:RCX) SECS identifier to reference DS:TMP_SECS identifier;

(* Set EPCM entry fields *)
EPCM(DS:RCX).BLOCKED := 0;
EPCM(DS:RCX).PENDING := 0;
EPCM(DS:RCX).MODIFIED := 0;
EPCM(DS:RCX).VALID := 1;
```

Flags Affected

None

Protected Mode Exceptions

#GP(0)	If a memory operand effective address is outside the DS segment limit.
	If a memory operand is not properly aligned.
	If an enclave memory operand is outside of the EPC.
	If an enclave memory operand is the wrong type.
	If a memory operand is locked.
	If the enclave is initialized.
	If the enclave's MRENCLAVE is locked.
	If the TCS page reserved bits are set.
	If the TCS page PREVSSP field is not zero.
	If the PT_SS_REST or PT_SS_REST page is the first or last page in the enclave.
	If the PT_SS_FIRST or PT_SS_REST page is not initialized correctly.
#PF(error code)	If a page fault occurs in accessing memory operands.
	If the EPC page is valid.

64-Bit Mode Exceptions

#GP(0)	If a memory operand is non-canonical form.
	If a memory operand is not properly aligned.
	If an enclave memory operand is outside of the EPC.
	If an enclave memory operand is the wrong type.
	If a memory operand is locked.
	If the enclave is initialized.
	If the enclave's MRENCLAVE is locked.
	If the TCS page reserved bits are set.
	If the TCS page PREVSSP field is not zero.
	If the PT_SS_REST or PT_SS_REST page is the first or last page in the enclave.
	If the PT_SS_FIRST or PT_SS_REST page is not initialized correctly.
#PF(error code)	If a page fault occurs in accessing memory operands.
	If the EPC page is valid.

EAUG—Add a Page to an Initialized Enclave

Opcode/ Instruction	Op/En	64/32 bit Mode Support	CPUID Feature Flag	Description
EAX = 0DH ENCLS[EAUG]	IR	V/V	SGX2	This leaf function adds a page to an initialized enclave.

Instruction Operand Encoding

Op/En	EAX	RBX	RCX
IR	EAUG (In)	Address of a SECINFO (In)	Address of the destination EPC page (In)

Description

This leaf function zeroes a page of EPC memory, associates the EPC page with an SECS page residing in the EPC, and stores the linear address and security attributes in the EPCM. As part of the association, the security attributes are configured to prevent access to the EPC page until a corresponding invocation of the EACCEPT leaf or EACCEPT-COPY leaf confirms the addition of the new page into the enclave. This instruction can only be executed when current privilege level is 0.

RBX contains the effective address of a PAGEINFO structure while RCX contains the effective address of an EPC page. The table below provides additional information on the memory parameter of the EAUG leaf function.

EAUG Memory Parameter Semantics

PAGEINFO	PAGEINFO.SECS	PAGEINFO.SRCPGE	PAGEINFO.SECINFO	EPCPAGE
Read access permitted by Non Enclave	Read/Write access permitted by Enclave	Must be zero	Read access permitted by Non Enclave	Write access permitted by Enclave

The instruction faults if any of the following:

EAUG Faulting Conditions

The operands are not properly aligned.	Unsupported security attributes are set.
Refers to an invalid SECS.	Reference is made to an SECS that is locked by another thread.
The EPC page is locked by another thread.	RCX does not contain an effective address of an EPC page.
The EPC page is already valid.	The specified enclave offset is outside of the enclave address space.
The SECS has been initialized.	

Concurrency Restrictions

Table 38-10. Base Concurrency Restrictions of EAUG

Leaf	Parameter	Base Concurrency Restrictions		
		Access	On Conflict	SGX_CONFLICT VM Exit Qualification
EAUG	Target [DS:RCX]	Exclusive	#GP	EPC_PAGE_CONFLICT_EXCEPTION
	SECS [DS:RBX]PAGEINFO.SECS	Shared	#GP	

Table 38-11. Additional Concurrency Restrictions of EAUG

Leaf	Parameter	Additional Concurrency Restrictions					
		vs. EACCEPT, EACCEPTCOPY, EMODPE, EMODPR, EMODT		vs. EADD, EEXTEND, EINIT		vs. ETRACK, ETRACKC	
		Access	On Conflict	Access	On Conflict	Access	On Conflict
EAUG	Target [DS:RCX]	Concurrent		Concurrent		Concurrent	
	SECS [DS:RBX]PAGE-INFO.SECS	Concurrent		Concurrent		Concurrent	

Operation

Temp Variables in EAUG Operational Flow

Name	Type	Size (bits)	Description
TMP_SECS	Effective Address	32/64	Effective address of the SECS destination page.
TMP_SECINFO	Effective Address	32/64	Effective address of an SECINFO structure which contains security attributes of the page to be added.
SCRATCH_SECINFO	SECINFO	512	Scratch storage for holding the contents of DS:TMP_SECINFO.
TMP_LINADDR	Unsigned Integer	64	Holds the linear address to be stored in the EPCM and used to calculate TMP_ENCLAVEOFFSET.

```
IF (DS:RBX is not 32Byte Aligned)
    THEN #GP(0); FI;

IF (DS:RCX is not 4KByte Aligned)
    THEN #GP(0); FI;

IF (DS:RCX does not resolve within an EPC)
    THEN #PF(DS:RCX); FI;

TMP_SECS := DS:RBX.SECS;
TMP_SECINFO := DS:RBX.SECINFO;
IF (DS:RBX.SECINFO is not 0)
    THEN
        IF (DS:TMP_SECINFO is not 64B aligned)
            THEN #GP(0); FI;
FI;

TMP_LINADDR := DS:RBX.LINADDR;

IF ( DS:TMP_SECS is not 4KByte aligned or TMP_LINADDR is not 4KByte aligned )
    THEN #GP(0); FI;

IF DS:RBX.SRCPAGE is not 0
    THEN #GP(0); FI;

IF (DS:TMP_SECS does not resolve within an EPC)
    THEN #PF(DS:TMP_SECS); FI;

(* Check the EPC page for concurrency *)
```

```
IF (EPC page in use)
    THEN
        IF (<<VMX non-root operation>> AND <<ENABLE_EPC_VIRTUALIZATION_EXTENSIONS>>)
            THEN
                VMCS.Exit_reason := SGX_CONFLICT;
                VMCS.Exit_qualification.code := EPC_PAGE_CONFLICT_EXCEPTION;
                VMCS.Exit_qualification.error := 0;
                VMCS.Guest-physical_address := << translation of DS:RCX produced by paging >>;
                VMCS.Guest-linear_address := DS:RCX;
                Deliver VMEXIT;
            ELSE
                #GP(0);
        FI;
FI:

IF (EPCM(DS:RCX).VALID ≠ 0)
    THEN #PF(DS:RCX); FI;

(* copy SECINFO contents into a scratch SECINFO *)
IF (DS:RBX.SECINFO is 0)
    THEN
        (* allocate and initialize a new scratch SECINFO structure *)
        SCRATCH_SECINFO.PT := PT_REG;
        SCRATCH_SECINFO.R := 1;
        SCRATCH_SECINFO.W := 1;
        SCRATCH_SECINFO.X := 0;
        << zero out remaining fields of SCRATCH_SECINFO >>
    ELSE
        (* copy SECINFO contents into scratch SECINFO *)
        SCRATCH_SECINFO := DS:TMP_SECINFO;
        (* check SECINFO flags for misconfiguration *)
        (* reserved flags must be zero *)
        (* SECINFO.FLAGS.PT must either be PT_SS_FIRST, or PT_SS_REST *)
        IF ( (SCRATCH_SECINFO reserved fields are not 0) or
        CPUID.(EAX=12H, ECX=1):EAX[6] is 0) OR
         (SCRATCH_SECINFO.PT is not PT_SS_FIRST, or PT_SS_REST) OR
         ( (SCRATCH_SECINFO.FLAGS.R is 0) OR (SCRATCH_SECINFO.FLAGS.W is 0) OR (SCRATCH_SECINFO.FLAGS.X is 1) ) )
            THEN #GP(0); FI;
FI;
(* Check if PT_SS_FIRST/PT_SS_REST page types are requested then CR4.CET must be 1 *)
IF ( (SCRATCH_SECINFO.PT is PT_SS_FIRST OR SCRATCH_SECINFO.PT is PT_SS_REST) AND CR4.CET == 0 )
    THEN #GP(0); FI;

(* Check the SECS for concurrency *)
IF (SECS is not available for EAUG)
    THEN #GP(0); FI;

IF (EPCM(DS:TMP_SECS).VALID = 0 or EPCM(DS:TMP_SECS).PT ≠ PT_SECS)
    THEN #PF(DS:TMP_SECS); FI;

(* Check if the enclave to which the page will be added is in the Initialized state *)
IF (DS:TMP_SECS is not initialized)
    THEN #GP(0); FI;
```

```
(* Check the enclave offset is within the enclave linear address space *)
IF ( (TMP_LINADDR < DS:TMP_SECS.BASEADDR) or (TMP_LINADDR ≥ DS:TMP_SECS.BASEADDR + DS:TMP_SECS.SIZE) )
    THEN #GP(0); FI;

IF ( (SCRATCH_SECINFO.PT is PT_SS_FIRST OR SCRATCH_SECINFO.PT is PT_SS_REST) )
    THEN
        (* SS pages cannot created on first or last page of ELRANGE *)
        IF ( TMP_LINADDR == DS:TMP_SECS.BASEADDR OR
         TMP_LINADDR == (DS:TMP_SECS.BASEADDR + DS:TMP_SECS.SIZE - 0x1000) )
            THEN
                #GP(0); FI;
FI;

(* Clear the content of EPC page*)
DS:RCX[32767:0] := 0;

IF (CPUID.(EAX=07H, ECX=0H):ECX[CET_SS] = 1)
    THEN
        (* set up shadow stack RSTORSSP token *)
        IF (SCRATCH_SECINFO.PT is PT_SS_FIRST)
        THEN
            DS:RCX[0xFF8] := (TMP_LINADDR + 0x1000) | TMP_SECS.ATTRIBUTES.MODE64BIT; FI;
FI;

(* Set EPCM security attributes *)
EPCM(DS:RCX).R := SCRATCH_SECINFO.FLAGS.R;
EPCM(DS:RCX).W := SCRATCH_SECINFO.FLAGS.W;
EPCM(DS:RCX).X := SCRATCH_SECINFO.FLAGS.X;
EPCM(DS:RCX).PT := SCRATCH_SECINFO.FLAGS.PT;
EPCM(DS:RCX).ENCLAVEADDRESS := TMP_LINADDR;
EPCM(DS:RCX).BLOCKED := 0;
EPCM(DS:RCX).PENDING := 1;
EPCM(DS:RCX).MODIFIED := 0;
EPCM(DS:RCX).PR := 0;

(* associate the EPCPAGE with the SECS by storing the SECS identifier of DS:TMP_SECS *)
Update EPCM(DS:RCX) SECS identifier to reference DS:TMP_SECS identifier;

(* Set EPCM valid fields *)
EPCM(DS:RCX).VALID := 1;
```

Flags Affected

None

Protected Mode Exceptions

#GP(0)	If a memory operand effective address is outside the DS segment limit. If a memory operand is not properly aligned. If a memory operand is locked. If the enclave is not initialized.
#PF(error code)	If a page fault occurs in accessing memory operands.

64-Bit Mode Exceptions

#GP(0)	If a memory operand is non-canonical form. If a memory operand is not properly aligned. If a memory operand is locked. If the enclave is not initialized.
#PF(error code)	If a page fault occurs in accessing memory operands.

EBLOCK—Mark a page in EPC as Blocked

Opcode/ Instruction	Op/En	64/32 bit Mode Support	CPUID Feature Flag	Description
EAX = 09H ENCLS[EBLOCK]	IR	V/V	SGX1	This leaf function marks a page in the EPC as blocked.

Instruction Operand Encoding

Op/En	EAX		RCX
IR	EBLOCK (In)	Return error code (Out)	Effective address of the EPC page (In)

Description

This leaf function causes an EPC page to be marked as BLOCKED. This instruction can only be executed when current privilege level is 0.

The content of RCX is an effective address of an EPC page. The DS segment is used to create linear address. Segment override is not supported.

An error code is returned in RAX.

The table below provides additional information on the memory parameter of EBLOCK leaf function.

EBLOCK Memory Parameter Semantics

EPCPAGE
Read/Write access permitted by Enclave

The error codes are:

Table 38-12. EBLOCK Return Value in RAX

Error Code (see Table 38-4)	Description
No Error	EBLOCK successful.
SGX_BLKSTATE	Page already blocked. This value is used to indicate to a VMM that the page was already in BLOCKED state as a result of EBLOCK and thus will need to be restored to this state when it is eventually reloaded (using ELDB).
SGX_ENTRYEPOCH_LOCKED	SECS locked for Entry Epoch update. This value indicates that an ETRACK is currently executing on the SECS. The EBLOCK should be reattempted.
SGX_NOTBLOCKABLE	Page type is not one which can be blocked.
SGX_PG_INVLD	Page is not valid and cannot be blocked.
SGX_EPC_PAGE_CONFLICT	Page is being written by EADD, EAUG, ECREATE, ELDU/B, EMODT, or EWB.

Concurrency Restrictions

Table 38-13. Base Concurrency Restrictions of EBLOCK

Leaf	Parameter	Base Concurrency Restrictions		
		Access	On Conflict	SGX_CONFLICT VM Exit Qualification
EBLOCK	Target [DS:RCX]	Shared	SGX_EPC_PAGE_ CONFLICT	

Table 38-14. Additional Concurrency Restrictions of EBLOCK

Leaf	Parameter	Additional Concurrency Restrictions					
		vs. EACCEPT, EACCEPTCOPY, EMODPE, EMODPR, EMODT		vs. EADD, EEXTEND, EINIT		vs. ETRACK, ETRACKC	
		Access	On Conflict	Access	On Conflict	Access	On Conflict
EBLOCK	Target [DS:RCX]	Concurrent		Concurrent		Concurrent	

Operation

Temp Variables in EBLOCK Operational Flow

Name	Type	Size (Bits)	Description
TMP_BLKSTATE	Integer	64	Page is already blocked.

```
IF (DS:RCX is not 4KByte Aligned)
    THEN #GP(0); FI;

IF (DS:RCX does not resolve within an EPC)
    THEN #PF(DS:RCX); FI;

RFLAGS.ZF,CF,PF,AF,OF,SF := 0;
RAX := 0;

(* Check the EPC page for concurrency*)
IF (EPC page in use)
    THEN
        RFLAGS.ZF := 1;
        RAX := SGX_EPC_PAGE_CONFLICT;
        GOTO DONE;
FI;

IF (EPCM(DS:RCX). VALID = 0)
    THEN
        RFLAGS.ZF := 1;
        RAX := SGX_PG_INVLD;
        GOTO DONE;
FI;

IF ( (EPCM(DS:RCX).PT ≠ PT_REG) and (EPCM(DS:RCX).PT ≠ PT_TCS) and (EPCM(DS:RCX).PT ≠ PT_TRIM)
 and EPCM(DS:RCX).PT ≠ PT_SS_FIRST) and (EPCM(DS:RCX).PT ≠ PT_SS_REST))
    THEN
        RFLAGS.CF := 1;
        IF (EPCM(DS:RCX).PT = PT_SECS)
            THEN RAX := SGX_PG_IS_SECS;
            ELSE RAX := SGX_NOTBLOCKABLE;
        FI;
        GOTO DONE;
FI;

(* Check if the page is already blocked and report blocked state *)
TMP_BLKSTATE := EPCM(DS:RCX).BLOCKED;
```

```
(* at this point, the page must be valid and PT_TCS or PT_REG or PT_TRIM*)
IF (TMP_BLKSTATE = 1)
    THEN
        RFLAGS.CF := 1;
        RAX := SGX_BLKSTATE;
    ELSE
        EPCM(DS:RCX).BLOCKED := 1
FI;
DONE:
```

Flags Affected

Sets ZF if SECS is in use or invalid, otherwise cleared. Sets CF if page is BLOCKED or not blockable, otherwise cleared. Clears PF, AF, OF, SF.

Protected Mode Exceptions

#GP(0)	If a memory operand effective address is outside the DS segment limit.
	If a memory operand is not properly aligned.
	If the specified EPC resource is in use.
#PF(error code)	If a page fault occurs in accessing memory operands.
	If a memory operand is not an EPC page.

64-Bit Mode Exceptions

#GP(0)	If a memory operand is non-canonical form.
	If a memory operand is not properly aligned.
	If the specified EPC resource is in use.
#PF(error code)	If a page fault occurs in accessing memory operands.
	If a memory operand is not an EPC page.

ECREATE—Create an SECS page in the Enclave Page Cache

Opcode/ Instruction	Op/En	64/32 bit Mode Support	CPUID Feature Flag	Description
EAX = 00H ENCLS[ECREATE]	IR	V/V	SGX1	This leaf function begins an enclave build by creating an SECS page in EPC.

Instruction Operand Encoding

Op/En	EAX	RBX	RCX
IR	ECREATE (In)	Address of a PAGEINFO (In)	Address of the destination SECS page (In)

Description

ENCLS[ECREATE] is the first instruction executed in the enclave build process. ECREATE copies an SECS structure outside the EPC into an SECS page inside the EPC. The internal structure of SECS is not accessible to software.

ECREATE will set up fields in the protected SECS and mark the page as valid inside the EPC. ECREATE initializes or checks unused fields.

Software sets the following fields in the source structure: SECS:BASEADDR, SECS:SIZE in bytes, ATTRIBUTES, CONFIGID, and CONFIGSVN. SECS:BASEADDR must be naturally aligned on an SECS.SIZE boundary. SECS.SIZE must be at least 2 pages (8192).

The source operand RBX contains an effective address of a PAGEINFO structure. PAGEINFO contains an effective address of a source SECS and an effective address of an SECINFO. The SECS field in PAGEINFO is not used.

The RCX register is the effective address of the destination SECS. It is an address of an empty slot in the EPC. The SECS structure must be page aligned. SECINFO flags must specify the page as an SECS page.

ECREATE Memory Parameter Semantics

PAGEINFO	PAGEINFO.SRCPGE	PAGEINFO.SECINFO	EPCPAGE
Read access permitted by Non Enclave	Read access permitted by Non Enclave	Read access permitted by Non Enclave	Write access permitted by Enclave

ECREATE will fault if the SECS target page is in use; already valid; outside the EPC. It will also fault if addresses are not aligned; unused PAGEINFO fields are not zero.

If the amount of space needed to store the SSA frame is greater than the amount specified in SECS.SSAFRAME-SIZE, a #GP(0) results. The amount of space needed for an SSA frame is computed based on DS:TMP_SECS.ATTRIBUTES.XFRM size. Details of computing the size can be found Section 39.7.

Concurrency Restrictions

Table 38-15. Base Concurrency Restrictions of ECREATE

Leaf	Parameter	Base Concurrency Restrictions		
		Access	On Conflict	SGX_CONFLICT VM Exit Qualification
ECREATE	SECS [DS:RCX]	Exclusive	#GP	EPC_PAGE_CONFLICT_EXCEPTION

Table 38-16. Additional Concurrency Restrictions of ECREATE

Leaf	Parameter	Additional Concurrency Restrictions					
		vs. EACCEPT, EACCEPTCOPY, EMODPE, EMODPR, EMODT		vs. EADD, EEXTEND, EINIT		vs. ETRACK, ETRACKC	
		Access	On Conflict	Access	On Conflict	Access	On Conflict
ECREATE	SECS [DS:RCX]	Concurrent		Concurrent		Concurrent	

Operation

Temp Variables in ECREATE Operational Flow

Name	Type	Size (Bits)	Description
TMP_SRCPGE	Effective Address	32/64	Effective address of the SECS source page.
TMP_SECS	Effective Address	32/64	Effective address of the SECS destination page.
TMP_SECINFO	Effective Address	32/64	Effective address of an SECINFO structure which contains security attributes of the SECS page to be added.
TMP_XSIZE	SSA Size	64	The size calculation of SSA frame.
TMP_MISC_SIZE	MISC Field Size	64	Size of the selected MISC field components.
TMPUPDATEFIELD	SHA256 Buffer	512	Buffer used to hold data being added to TMP_SECS.MRENCLAVE.

```
IF (DS:RBX is not 32Byte Aligned)
    THEN #GP(0); FI;

IF (DS:RCX is not 4KByte Aligned)
    THEN #GP(0); FI;

IF (DS:RCX does not resolve within an EPC)
    THEN #PF(DS:RCX); FI;

TMP_SRCPGE := DS:RBX.SRCPGE;
TMP_SECINFO := DS:RBX.SECINFO;

IF (DS:TMP_SRCPGE is not 4KByte aligned or DS:TMP_SECINFO is not 64Byte aligned)
    THEN #GP(0); FI;

IF (DS:RBX.LINADDR ! = 0 or DS:RBX.SECS ≠ 0)
    THEN #GP(0); FI;

(* Check for misconfigured SECINFO flags*)
IF (DS:TMP_SECINFO reserved fields are not zero or DS:TMP_SECINFO.FLAGS.PT ≠ PT_SECS)
    THEN #GP(0); FI;

TMP_SECS := RCX;

IF (EPC entry in use)
    THEN
        IF (<<VMX non-root operation>> AND <<ENABLE_EPC_VIRTUALIZATION_EXTENSIONS>>)
            THEN
                VMCS.Exit_reason := SGX_CONFLICT;
```

```
                    VMCS.Exit_qualification.code := EPC_PAGE_CONFLICT_EXCEPTION;
                    VMCS.Exit_qualification.error := 0;
                    VMCS.Guest-physical_address :=
                        << translation of DS:TMP_SECS produced by paging >>;
                    VMCS.Guest-linear_address := DS:TMP_SECS;
                Deliver VMEXIT;
                ELSE
                    #GP(0);
            FI;
FI;

IF (EPC entry in use)
    THEN #GP(0); FI;

IF (EPCM(DS:RCX).VALID = 1)
    THEN #PF(DS:RCX); FI;

(* Copy 4KBytes from source page to EPC page*)
DS:RCX[32767:0] := DS:TMP_SRCPGE[32767:0];

(* Check lower 2 bits of XFRM are set *)
IF ( ( DS:TMP_SECS.ATTRIBUTES.XFRM BitwiseAND 03H) ≠ 03H)
    THEN #GP(0); FI;

IF (XFRM is illegal)
    THEN #GP(0); FI;

(* Check legality of CET_ATTRIBUTES *)
IF ((DS:TMP_SECS.ATTRIBUTES.CET = 0 and DS:TMP_SECS.CET_ATTRIBUTES ≠ 0) ||
    (DS:TMP_SECS.ATTRIBUTES.CET = 0 and DS:TMP_SECS.CET_LEG_BITMAP_OFFSET ≠ 0) ||
    (CPUID.(EAX=7, ECX=0):EDX[CET_IBT] = 0 and DS:TMP_SECS.CET_LEG_BITMAP_OFFSET ≠ 0) ||
    (CPUID.(EAX=7, ECX=0):EDX[CET_IBT] = 0 and DS:TMP_SECS.CET_ATTRIBUTES[5:2] ≠ 0) ||
    (CPUID.(EAX=7, ECX=0):ECX[CET_SS] = 0 and DS:TMP_SECS.CET_ATTRIBUTES[1:0] ≠ 0) ||
    (DS:TMP_SECS.ATTRIBUTES.MODE64BIT = 1 and
     (DS:TMP_SECS.BASEADDR + DS:TMP_SECS.CET_LEG_BITMAP_OFFSET) not canonical) ||
    (DS:TMP_SECS.ATTRIBUTES.MODE64BIT = 0 and
     (DS:TMP_SECS.BASEADDR + DS:TMP_SECS.CET_LEG_BITMAP_OFFSET) & 0xFFFFFFFF00000000) ||
    (DS:TMP_SECS.CET_ATTRIBUTES.reserved fields not 0) or
     (DS:TMP_SECS.CET_LEG_BITMAP_OFFSET) is not page aligned))
    THEN
        #GP(0);
FI;

(* Make sure that the SECS does not have any unsupported MISCSELECT options*)
IF ( !(CPUID.(EAX=12H, ECX=0):EBX[31:0] & DS:TMP_SECS.MISCSELECT[31:0]) )
    THEN
        EPCM(DS:TMP_SECS).EntryLock.Release();
        #GP(0);
FI;

( * Compute size of MISC area *)
TMP_MISC_SIZE := compute_misc_region_size();

(* Compute the size required to save state of the enclave on async exit, see Section 39.7.2.2*)
```

```
TMP_XSIZE := compute_xsave_size(DS:TMP_SECS.ATTRIBUTES.XFRM) + GPR_SIZE + TMP_MISC_SIZE;

(* Ensure that the declared area is large enough to hold XSAVE and GPR stat *)
IF ( DS:TMP_SECS.SSAFRAMESIZE*4096 < TMP_XSIZE)
    THEN #GP(0); FI;

IF ( (DS:TMP_SECS.ATTRIBUTES.MODE64BIT = 1) and (DS:TMP_SECS.BASEADDR is not canonical) )
    THEN #GP(0); FI;

IF ( (DS:TMP_SECS.ATTRIBUTES.MODE64BIT = 0) and (DS:TMP_SECS.BASEADDR and 0FFFFFFFF00000000H) )
    THEN #GP(0); FI;

IF ( (DS:TMP_SECS.ATTRIBUTES.MODE64BIT = 0) and (DS:TMP_SECS.SIZE ≥ 2 ^ (CPUID.(EAX=12H, ECX=0):.EDX[7:0]) ) )
    THEN #GP(0); FI;

IF ( (DS:TMP_SECS.ATTRIBUTES.MODE64BIT = 1) and (DS:TMP_SECS.SIZE ≥ 2 ^ (CPUID.(EAX=12H, ECX=0):.EDX[15:8]) ) )
    THEN #GP(0); FI;

(* Enclave size must be at least 8192 bytes and must be power of 2 in bytes*)
IF (DS:TMP_SECS.SIZE < 8192 or popcnt(DS:TMP_SECS.SIZE) > 1)
    THEN #GP(0); FI;

(* Ensure base address of an enclave is aligned on size*)
IF ( ( DS:TMP_SECS.BASEADDR and (DS:TMP_SECS.SIZE-1) ) )
    THEN #GP(0); FI;

(* Ensure the SECS does not have any unsupported attributes*)
IF ( DS:TMP_SECS.ATTRIBUTES and (~CR_SGX_ATTRIBUTES_MASK) )
    THEN #GP(0); FI;

IF ( DS:TMP_SECS reserved fields are not zero)
    THEN #GP(0); FI;

(* Verify that CONFIGID/CONFIGSVN are not set with attribute *)
IF ( ((DS:TMP_SECS.CONFIGID ≠ 0) or (DS:TMP_SECS.CONFIGSVN ≠0)) AND (DS:TMP_SECS.ATTRIBUTES.KSS == 0 ))
    THEN #GP(0); FI;

Clear DS:TMP_SECS to Uninitialized;
DS:TMP_SECS.MRENCLAVE := SHA256INITIALIZE(DS:TMP_SECS.MRENCLAVE);
DS:TMP_SECS.ISVSVN := 0;
DS:TMP_SECS.ISVPRODID := 0;

(* Initialize hash updates etc*)
Initialize enclave's MRENCLAVE update counter;

(* Add "ECREATE" string and SECS fields to MRENCLAVE *)
TMPUPDATEFIELD[63:0] := 0045544145524345H; // "ECREATE"
TMPUPDATEFIELD[95:64] := DS:TMP_SECS.SSAFRAMESIZE;
TMPUPDATEFIELD[159:96] := DS:TMP_SECS.SIZE;
IF (CPUID.(EAX=7, ECX=0):EDX[CET_IBT] = 1)
    THEN
        TMPUPDATEFIELD[223:160] := DS:TMP_SECS.CET_LEG_BITMAP_OFFSET;
    ELSE
        TMPUPDATEFIELD[223:160] := 0;
```

```
FI;
TMPUPDATEFIELD[511:160] := 0;
DS:TMP_SECS.MRENCLAVE := SHA256UPDATE(DS:TMP_SECS.MRENCLAVE, TMPUPDATEFIELD)
INC enclave's MRENCLAVE update counter;

(* Set EID *)
DS:TMP_SECS.EID := LockedXAdd(CR_NEXT_EID, 1);

(* Initialize the virtual child count to zero *)
DS:TMP_SECS.VIRTCHILDCNT := 0;

(* Load ENCLAVECONTEXT with Address out of paging of SECS *)
<< store translation of DS:RCX produced by paging in SECS(DS:RCX).ENCLAVECONTEXT >>

(* Set the EPCM entry, first create SECS identifier and store the identifier in EPCM *)
EPCM(DS:TMP_SECS).PT := PT_SECS;
EPCM(DS:TMP_SECS).ENCLAVEADDRESS := 0;
EPCM(DS:TMP_SECS).R := 0;
EPCM(DS:TMP_SECS).W := 0;
EPCM(DS:TMP_SECS).X := 0;

(* Set EPCM entry fields *)
EPCM(DS:RCX).BLOCKED := 0;
EPCM(DS:RCX).PENDING := 0;
EPCM(DS:RCX).MODIFIED := 0;
EPCM(DS:RCX).PR := 0;
EPCM(DS:RCX).VALID := 1;
```

Flags Affected

None

Protected Mode Exceptions

#GP(0)	If a memory operand effective address is outside the DS segment limit.
	If a memory operand is not properly aligned.
	If the reserved fields are not zero.
	If PAGEINFO.SECS is not zero.
	If PAGEINFO.LINADDR is not zero.
	If the SECS destination is locked.
	If SECS.SSAFRAMESIZE is insufficient.
#PF(error code)	If a page fault occurs in accessing memory operands.
	If the SECS destination is outside the EPC.

64-Bit Mode Exceptions

#GP(0)	If a memory address is non-canonical form.
	If a memory operand is not properly aligned.
	If the reserved fields are not zero.
	If PAGEINFO.SECS is not zero.
	If PAGEINFO.LINADDR is not zero.
	If the SECS destination is locked.
	If SECS.SSAFRAMESIZE is insufficient.

#PF(error code)	If a page fault occurs in accessing memory operands. If the SECS destination is outside the EPC.

EDBGRD—Read From a Debug Enclave

Opcode/ Instruction	Op/En	64/32 bit Mode Support	CPUID Feature Flag	Description
EAX = 04H ENCLS[EDBGRD]	IR	V/V	SGX1	This leaf function reads a dword/quadword from a debug enclave.

Instruction Operand Encoding

Op/En	EAX		RBX	RCX
IR	EDBGRD (In)	Return error code (Out)	Data read from a debug enclave (Out)	Address of source memory in the EPC (In)

Description

This leaf function copies a quadword/doubleword from an EPC page belonging to a debug enclave into the RBX register. Eight bytes are read in 64-bit mode, four bytes are read in non-64-bit modes. The size of data read cannot be overridden.

The effective address of the source location inside the EPC is provided in the register RCX.

EDBGRD Memory Parameter Semantics

EPCQW
Read access permitted by Enclave

The error codes are:

Table 38-17. EDBGRD Return Value in RAX

Error Code (see Table 38-4)	Description
No Error	EDBGRD successful.
SGX_PAGE_NOT_DEBUGGABLE	The EPC page cannot be accessed because it is in the PENDING or MODIFIED state.

The instruction faults if any of the following:

EDBGRD Faulting Conditions

RCX points into a page that is an SECS.	RCX does not resolve to a naturally aligned linear address.
RCX points to a page that does not belong to an enclave that is in debug mode.	RCX points to a location inside a TCS that is beyond the architectural size of the TCS (SGX_TCS_LIMIT).
An operand causing any segment violation.	May page fault.
CPL > 0.	

This instruction ignores the EPCM RWX attributes on the enclave page. Consequently, violation of EPCM RWX attributes via EDBGRD does not result in a #GP.

Concurrency Restrictions

Table 38-18. Base Concurrency Restrictions of EDBGRD

Leaf	Parameter	Base Concurrency Restrictions		
		Access	On Conflict	SGX_CONFLICT VM Exit Qualification
EDBGRD	Target [DS:RCX]	Shared	#GP	

Table 38-19. Additional Concurrency Restrictions of EDBGRD

Leaf	Parameter	Additional Concurrency Restrictions					
		vs. EACCEPT, EACCEPTCOPY, EMODPE, EMODPR, EMODT		vs. EADD, EEXTEND, EINIT		vs. ETRACK, ETRACKC	
		Access	On Conflict	Access	On Conflict	Access	On Conflict
EDBGRD	Target [DS:RCX]	Concurrent		Concurrent		Concurrent	

Operation

Temp Variables in EDBGRD Operational Flow

Name	Type	Size (Bits)	Description
TMP_MODE64	Binary	1	((IA32_EFER.LMA = 1) && (CS.L = 1))
TMP_SECS		64	Physical address of SECS of the enclave to which source operand belongs.

```
TMP_MODE64 := ((IA32_EFER.LMA = 1) && (CS.L = 1));

IF ( (TMP_MODE64 = 1) and (DS:RCX is not 8Byte Aligned) )
    THEN #GP(0); FI;

IF ( (TMP_MODE64 = 0) and (DS:RCX is not 4Byte Aligned) )
    THEN #GP(0); FI;

IF (DS:RCX does not resolve within an EPC)
    THEN #PF(DS:RCX); FI;

(* make sure no other Intel SGX instruction is accessing the same EPCM entry *)
IF (Another instruction modifying the same EPCM entry is executing)
    THEN #GP(0); FI;

IF (EPCM(DS:RCX).VALID = 0)
    THEN #PF(DS:RCX); FI;

(* make sure that DS:RCX (SOURCE) is pointing to a PT_REG or PT_TCS or PT_VA or PT_SS_FIRST or PT_SS_REST *)
IF ( (EPCM(DS:RCX).PT ≠ PT_REG) and (EPCM(DS:RCX).PT ≠ PT_TCS) and (EPCM(DS:RCX).PT ≠ PT_VA)
and (EPCM(DS:RCX).PT ≠ PT_SS_FIRST) and (EPCM(DS:RCX).PT ≠ PT_SS_REST))
    THEN #PF(DS:RCX); FI;

(* make sure that DS:RCX points to an accessible EPC page *)
IF (EPCM(DS:RCX).PENDING is not 0 or (EPCM(DS:RCX).MODIFIED is not 0) )
    THEN
        RFLAGS.ZF := 1;
```

```
        RAX := SGX_PAGE_NOT_DEBUGGABLE;
        GOTO DONE;
FI;

(* If source is a TCS, then make sure that the offset into the page is not beyond the TCS size*)
IF ( ( EPCM(DS:RCX). PT = PT_TCS) and ((DS:RCX) & FFFH ≥ SGX_TCS_LIMIT) )
    THEN #GP(0); FI;

(* make sure the enclave owning the PT_REG or PT_TCS page allow debug *)
IF ( (EPCM(DS:RCX).PT = PT_REG) or (EPCM(DS:RCX).PT = PT_TCS) )
    THEN
        TMP_SECS := GET_SECS_ADDRESS;
        IF (TMP_SECS.ATTRIBUTES.DEBUG = 0)
            THEN #GP(0); FI;
        IF ( (TMP_MODE64 = 1) )
            THEN RBX[63:0] := (DS:RCX)[63:0];
            ELSE EBX[31:0] := (DS:RCX)[31:0];
        FI;
    ELSE
        TMP_64BIT_VAL[63:0] := (DS:RCX)[63:0] & (~07H); // Read contents from VA slot
        IF (TMP_MODE64 = 1)
            THEN
                IF (TMP_64BIT_VAL ≠ 0H)
                    THEN RBX[63:0] := 0FFFFFFFFFFFFFFFFH;
                    ELSE RBX[63:0] := 0H;
                FI;
            ELSE
                IF (TMP_64BIT_VAL ≠ 0H)
                    THEN EBX[31:0] := 0FFFFFFFFH;
                    ELSE EBX[31:0] := 0H;
                FI;
FI;

(* clear EAX and ZF to indicate successful completion *)
RAX := 0;
RFLAGS.ZF := 0;

DONE:
(* clear flags *)
RFLAGS.CF,PF,AF,OF,SF := 0;
```

Flags Affected

ZF is set if the page is MODIFIED or PENDING; RAX contains the error code. Otherwise ZF is cleared and RAX is set to 0. CF, PF, AF, OF, SF are cleared.

Protected Mode Exceptions

#GP(0)	If the address in RCS violates DS limit or access rights.
	If DS segment is unusable.
	If RCX points to a memory location not 4Byte-aligned.
	If the address in RCX points to a page belonging to a non-debug enclave.
	If the address in RCX points to a page which is not PT_TCS, PT_REG or PT_VA.
	If the address in RCX points to a location inside TCS that is beyond SGX_TCS_LIMIT.

#PF(error code)	If a page fault occurs in accessing memory operands. If the address in RCX points to a non-EPC page. If the address in RCX points to an invalid EPC page.

64-Bit Mode Exceptions

#GP(0)	If RCX is non-canonical form. If RCX points to a memory location not 8Byte-aligned. If the address in RCX points to a page belonging to a non-debug enclave. If the address in RCX points to a page which is not PT_TCS, PT_REG or PT_VA. If the address in RCX points to a location inside TCS that is beyond SGX_TCS_LIMIT.
#PF(error code)	If a page fault occurs in accessing memory operands. If the address in RCX points to a non-EPC page. If the address in RCX points to an invalid EPC page.

EDBGWR—Write to a Debug Enclave

Opcode/ Instruction	Op/En	64/32 bit Mode Support	CPUID Feature Flag	Description
EAX = 05H ENCLS[EDBGWR]	IR	V/V	SGX1	This leaf function writes a dword/quadword to a debug enclave.

Instruction Operand Encoding

Op/En	EAX		RBX	RCX
IR	EDBGWR (In)	Return error code (Out)	Data to be written to a debug enclave (In)	Address of Target memory in the EPC (In)

Description

This leaf function copies the content in EBX/RBX to an EPC page belonging to a debug enclave. Eight bytes are written in 64-bit mode, four bytes are written in non-64-bit modes. The size of data cannot be overridden.

The effective address of the target location inside the EPC is provided in the register RCX.

EDBGWR Memory Parameter Semantics

EPCQW
Write access permitted by Enclave

The instruction faults if any of the following:

EDBGWR Faulting Conditions

RCX points into a page that is an SECS.	RCX does not resolve to a naturally aligned linear address.
RCX points to a page that does not belong to an enclave that is in debug mode.	RCX points to a location inside a TCS that is not the FLAGS word.
An operand causing any segment violation.	May page fault.
CPL > 0.	

The error codes are:

Table 38-20. EDBGWR Return Value in RAX

Error Code (see Table 38-4)	Description
No Error	EDBGWR successful.
SGX_PAGE_NOT_DEBUGGABLE	The EPC page cannot be accessed because it is in the PENDING or MODIFIED state.

This instruction ignores the EPCM RWX attributes on the enclave page. Consequently, violation of EPCM RWX attributes via EDBGRD does not result in a #GP.

Concurrency Restrictions

Table 38-21. Base Concurrency Restrictions of EDBGWR

Leaf	Parameter	Base Concurrency Restrictions		
		Access	On Conflict	SGX_CONFLICT VM Exit Qualification
EDBGWR	Target [DS:RCX]	Shared	#GP	

Table 38-22. Additional Concurrency Restrictions of EDBGWR

Leaf	Parameter	Additional Concurrency Restrictions					
		vs. EACCEPT, EACCEPTCOPY, EMODPE, EMODPR, EMODT		vs. EADD, EEXTEND, EINIT		vs. ETRACK, ETRACKC	
		Access	On Conflict	Access	On Conflict	Access	On Conflict
EDBGWR	Target [DS:RCX]	Concurrent		Concurrent		Concurrent	

Operation

Temp Variables in EDBGWR Operational Flow

Name	Type	Size (Bits)	Description
TMP_MODE64	Binary	1	((IA32_EFER.LMA = 1) && (CS.L = 1)).
TMP_SECS		64	Physical address of SECS of the enclave to which source operand belongs.

```
TMP_MODE64 := ((IA32_EFER.LMA = 1) && (CS.L = 1));

IF ( (TMP_MODE64 = 1) and (DS:RCX is not 8Byte Aligned) )
    THEN #GP(0); FI;

IF ( (TMP_MODE64 = 0) and (DS:RCX is not 4Byte Aligned) )
    THEN #GP(0); FI;

IF (DS:RCX does not resolve within an EPC)
    THEN #PF(DS:RCX); FI;

(* make sure no other Intel SGX instruction is accessing the same EPCM entry *)
IF (Another instruction modifying the same EPCM entry is executing)
    THEN #GP(0); FI;

IF (EPCM(DS:RCX).VALID = 0)
    THEN #PF(DS:RCX); FI;

(* make sure that DS:RCX (DST) is pointing to a PT_REG or PT_TCS or PT_SS_FIRST or PT_SS_REST *)
IF ( (EPCM(DS:RCX).PT ≠ PT_REG) and (EPCM(DS:RCX).PT ≠ PT_TCS)
  and (EPCM(DS:RCX).PT ≠ PT_SS_FIRST) and (EPCM(DS:RCX).PT ≠ PT_SS_REST))
    THEN #PF(DS:RCX); FI;

(* make sure that DS:RCX points to an accessible EPC page *)
IF ( (EPCM(DS:RCX).PENDING is not 0) or (EPCM(DS:RCS).MODIFIED is not 0) )
    THEN
        RFLAGS.ZF := 1;
```

```
        RAX := SGX_PAGE_NOT_DEBUGGABLE;
        GOTO DONE;
FI;

(* If destination is a TCS, then make sure that the offset into the page can only point to the FLAGS field*)
IF ( ( EPCM(DS:RCX). PT = PT_TCS) and ((DS:RCX) & FF8H ≠ offset_of_FLAGS & 0FF8H) )
    THEN #GP(0); FI;

(* Locate the SECS for the enclave to which the DS:RCX page belongs *)
TMP_SECS := GET_SECS_PHYS_ADDRESS(EPCM(DS:RCX).ENCLAVESECS);

(* make sure the enclave owning the PT_REG or PT_TCS page allow debug *)
IF (TMP_SECS.ATTRIBUTES.DEBUG = 0)
    THEN #GP(0); FI;

IF ( (TMP_MODE64 = 1) )
    THEN (DS:RCX)[63:0] := RBX[63:0];
    ELSE (DS:RCX)[31:0] := EBX[31:0];
FI;

(* clear EAX and ZF to indicate successful completion *)
RAX := 0;
RFLAGS.ZF := 0;

DONE:
(* clear flags *)
RFLAGS.CF,PF,AF,OF,SF := 0
```

Flags Affected

ZF is set if the page is MODIFIED or PENDING; RAX contains the error code. Otherwise ZF is cleared and RAX is set to 0. CF, PF, AF, OF, SF are cleared.

Protected Mode Exceptions

#GP(0)	If the address in RCS violates DS limit or access rights.
	If DS segment is unusable.
	If RCX points to a memory location not 4Byte-aligned.
	If the address in RCX points to a page belonging to a non-debug enclave.
	If the address in RCX points to a page which is not PT_TCS or PT_REG.
	If the address in RCX points to a location inside TCS that is not the FLAGS word.
#PF(error code)	If a page fault occurs in accessing memory operands.
	If the address in RCX points to a non-EPC page.
	If the address in RCX points to an invalid EPC page.

64-Bit Mode Exceptions

#GP(0)	If RCX is non-canonical form.
	If RCX points to a memory location not 8Byte-aligned.
	If the address in RCX points to a page belonging to a non-debug enclave.
	If the address in RCX points to a page which is not PT_TCS or PT_REG.
	If the address in RCX points to a location inside TCS that is not the FLAGS word.

#PF(error code)	If a page fault occurs in accessing memory operands. If the address in RCX points to a non-EPC page. If the address in RCX points to an invalid EPC page.

EEXTEND—Extend Uninitialized Enclave Measurement by 256 Bytes

Opcode/ Instruction	Op/En	64/32 bit Mode Support	CPUID Feature Flag	Description
EAX = 06H ENCLS[EEXTEND]	IR	V/V	SGX1	This leaf function measures 256 bytes of an uninitialized enclave page.

Instruction Operand Encoding

Op/En	EAX	EBX	RCX
IR	EEXTEND (In)	Effective address of the SECS of the data chunk (In)	Effective address of a 256-byte chunk in the EPC (In)

Description

This leaf function updates the MRENCLAVE measurement register of an SECS with the measurement of an EXTEND string compromising of "EEXTEND" || ENCLAVEOFFSET || PADDING || 256 bytes of the enclave page. This instruction can only be executed when current privilege level is 0 and the enclave is uninitialized.

RBX contains the effective address of the SECS of the region to be measured. The address must be the same as the one used to add the page into the enclave.

RCX contains the effective address of the 256 byte region of an EPC page to be measured. The DS segment is used to create linear addresses. Segment override is not supported.

EEXTEND Memory Parameter Semantics

EPC[RCX]
Read access by Enclave

The instruction faults if any of the following:

EEXTEND Faulting Conditions

RBX points to an address not 4KBytes aligned.	RBX does not resolve to an SECS.
RBX does not point to an SECS page.	RBX does not point to the SECS page of the data chunk.
RCX points to an address not 256B aligned.	RCX points to an unused page or a SECS.
RCX does not resolve in an EPC page.	If SECS is locked.
If the SECS is already initialized.	May page fault.
CPL > 0.	

Concurrency Restrictions

Table 38-23. Base Concurrency Restrictions of EEXTEND

Leaf	Parameter	Base Concurrency Restrictions		
		Access	On Conflict	SGX_CONFLICT VM Exit Qualification
EEXTEND	Target [DS:RCX]	Shared	#GP	
	SECS [DS:RBX]	Concurrent		

Table 38-24. Additional Concurrency Restrictions of EEXTEND

Leaf	Parameter	Additional Concurrency Restrictions					
		vs. EACCEPT, EACCEPTCOPY, EMODPE, EMODPR, EMODT		vs. EADD, EEXTEND, EINIT		vs. ETRACK, ETRACKC	
		Access	On Conflict	Access	On Conflict	Access	On Conflict
EEXTEND	Target [DS:RCX]	Concurrent		Concurrent		Concurrent	
	SECS [DS:RBX]	Concurrent		Exclusive	#GP	Concurrent	

Operation

Temp Variables in EEXTEND Operational Flow

Name	Type	Size (Bits)	Description
TMP_SECS		64	Physical address of SECS of the enclave to which source operand belongs.
TMP_ENCLAVEOFFSET	Enclave Offset	64	The page displacement from the enclave base address.
TMPUPDATEFIELD	SHA256 Buffer	512	Buffer used to hold data being added to TMP_SECS.MRENCLAVE.

```
TMP_MODE64 := ((IA32_EFER.LMA = 1) && (CS.L = 1));

IF (DS:RBX is not 4096 Byte Aligned)
    THEN #GP(0); FI;

IF (DS:RBX does not resolve to an EPC page)
    THEN #PF(DS:RBX); FI;

IF (DS:RCX is not 256Byte Aligned)
    THEN #GP(0); FI;

IF (DS:RCX does not resolve within an EPC)
    THEN #PF(DS:RCX); FI;

(* make sure no other Intel SGX instruction is accessing EPCM *)
IF (Other instructions accessing EPCM)
    THEN #GP(0); FI;

IF (EPCM(DS:RCX). VALID = 0)
    THEN #PF(DS:RCX); FI;

(* make sure that DS:RCX (DST) is pointing to a PT_REG or PT_TCS or PT_SS_FIRST or PT_SS_REST *)
IF ( (EPCM(DS:RCX).PT ≠ PT_REG) and (EPCM(DS:RCX).PT ≠ PT_TCS)
  and (EPCM(DS:RCX).PT ≠ PT_SS_FIRST) and (EPCM(DS:RCX).PT ≠ PT_SS_REST))
    THEN #PF(DS:RCX); FI;

TMP_SECS := Get_SECS_ADDRESS();

IF (DS:RBX does not resolve to TMP_SECS)
    THEN #GP(0); FI;

(* make sure no other instruction is accessing MRENCLAVE or ATTRIBUTES.INIT *)
IF ( (Other instruction accessing MRENCLAVE) or (Other instructions checking or updating the initialized state of the SECS))
```

```
    THEN #GP(0); FI;

(* Calculate enclave offset *)
TMP_ENCLAVEOFFSET := EPCM(DS:RCX).ENCLAVEADDRESS - TMP_SECS.BASEADDR;
TMP_ENCLAVEOFFSET := TMP_ENCLAVEOFFSET + (DS:RCX & 0FFFH)

(* Add EEXTEND message and offset to MRENCLAVE *)
TMPUPDATEFIELD[63:0] := 00444E4554584545H; // "EEXTEND"
TMPUPDATEFIELD[127:64] := TMP_ENCLAVEOFFSET;
TMPUPDATEFIELD[511:128] := 0; // 48 bytes
TMP_SECS.MRENCLAVE := SHA256UPDATE(TMP_SECS.MRENCLAVE, TMPUPDATEFIELD)
INC enclave's MRENCLAVE update counter;

(*Add 256 bytes to MRENCLAVE, 64 byte at a time *)
TMP_SECS.MRENCLAVE := SHA256UPDATE(TMP_SECS.MRENCLAVE, DS:RCX[511:0] );
TMP_SECS.MRENCLAVE := SHA256UPDATE(TMP_SECS.MRENCLAVE, DS:RCX[1023: 512] );
TMP_SECS.MRENCLAVE := SHA256UPDATE(TMP_SECS.MRENCLAVE, DS:RCX[1535: 1024] );
TMP_SECS.MRENCLAVE := SHA256UPDATE(TMP_SECS.MRENCLAVE, DS:RCX[2047: 1536] );
INC enclave's MRENCLAVE update counter by 4;
```

Flags Affected

None

Protected Mode Exceptions

#GP(0)	If the address in RBX is outside the DS segment limit.
	If RBX points to an SECS page which is not the SECS of the data chunk.
	If the address in RCX is outside the DS segment limit.
	If RCX points to a memory location not 256Byte-aligned.
	If another instruction is accessing MRENCLAVE.
	If another instruction is checking or updating the SECS.
	If the enclave is already initialized.
#PF(error code)	If a page fault occurs in accessing memory operands.
	If the address in RBX points to a non-EPC page.
	If the address in RCX points to a page which is not PT_TCS or PT_REG.
	If the address in RCX points to a non-EPC page.
	If the address in RCX points to an invalid EPC page.

64-Bit Mode Exceptions

#GP(0)	If RBX is non-canonical form.
	If RBX points to an SECS page which is not the SECS of the data chunk.
	If RCX is non-canonical form.
	If RCX points to a memory location not 256 Byte-aligned.
	If another instruction is accessing MRENCLAVE.
	If another instruction is checking or updating the SECS.
	If the enclave is already initialized.
#PF(error code)	If a page fault occurs in accessing memory operands.
	If the address in RBX points to a non-EPC page.
	If the address in RCX points to a page which is not PT_TCS or PT_REG.
	If the address in RCX points to a non-EPC page.
	If the address in RCX points to an invalid EPC page.

EINIT—Initialize an Enclave for Execution

Opcode/ Instruction	Op/En	64/32 bit Mode Support	CPUID Feature Flag	Description
EAX = 02H ENCLS[EINIT]	IR	V/V	SGX1	This leaf function initializes the enclave and makes it ready to execute enclave code.

Instruction Operand Encoding

Op/En	EAX		RBX	RCX	RDX
IR	EINIT (In)	Error code (Out)	Address of SIGSTRUCT (In)	Address of SECS (In)	Address of EINITTOKEN (In)

Description

This leaf function is the final instruction executed in the enclave build process. After EINIT, the MRENCLAVE measurement is complete, and the enclave is ready to start user code execution using the EENTER instruction.

EINIT takes the effective address of a SIGSTRUCT and EINITTOKEN. The SIGSTRUCT describes the enclave including MRENCLAVE, ATTRIBUTES, ISVSVN, a 3072 bit RSA key, and a signature using the included key. SIGSTRUCT must be populated with two values, q1 and q2. These are calculated using the formulas shown below:

q1 = floor(Signature^2 / Modulus);

q2 = floor((Signature^3 - q1 * Signature * Modulus) / Modulus);

The EINITTOKEN contains the MRENCLAVE, MRSIGNER, and ATTRIBUTES. These values must match the corresponding values in the SECS. If the EINITTOKEN was created with a debug launch key, the enclave must be in debug mode as well.

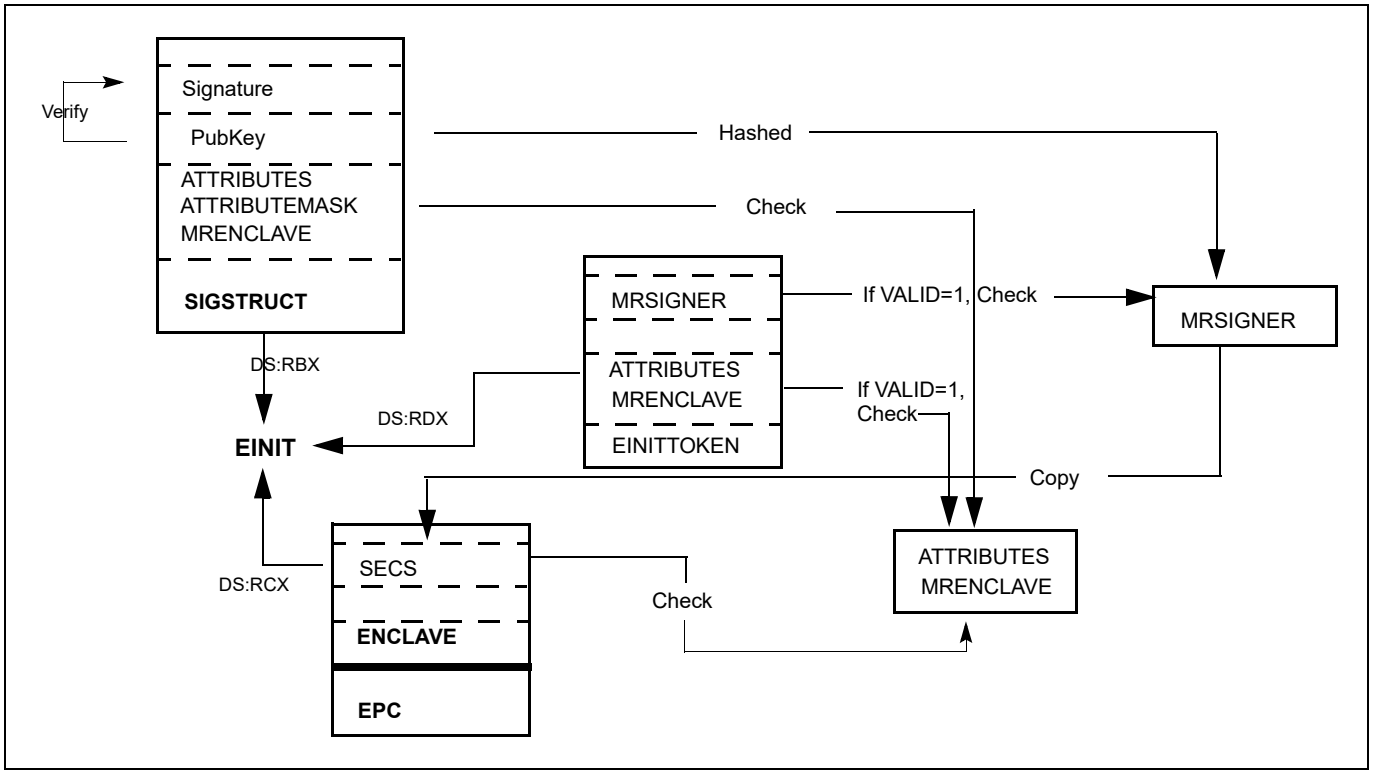

Figure 38-1. Relationships Between SECS, SIGSTRUCT, and EINITTOKEN

EINIT Memory Parameter Semantics

SIGSTRUCT	SECS	EINITTOKEN
Access by non-Enclave	Read/Write access by Enclave	Access by non-Enclave

EINIT performs the following steps, which can be seen in Figure 38-1:

1. Validates that SIGSTRUCT is signed using the enclosed public key.
2. Checks that the completed computation of SECS.MRENCLAVE equals SIGSTRUCT.HASHENCLAVE.
3. Checks that no controlled ATTRIBUTES bits are set in SIGSTRUCT.ATTRIBUTES unless the SHA256 digest of SIGSTRUCT.MODULUS equals IA32_SGX_LEPUBKEYHASH.
4. Checks that the result of bitwise and-ing SIGSTRUCT.ATTRIBUTEMASK with SIGSTRUCT.ATTRIBUTES equals the result of bitwise and-ing SIGSTRUCT.ATTRIBUTEMASK with SECS.ATTRIBUTES.
5. If EINITTOKEN.VALID is 0, checks that the SHA256 digest of SIGSTRUCT.MODULUS equals IA32_SGX_LEPUBKEYHASH.
6. If EINITTOKEN.VALID is 1, checks the validity of EINITTOKEN.
7. If EINITTOKEN.VALID is 1, checks that EINITTOKEN.MRENCLAVE equals SECS.MRENCLAVE.
8. If EINITTOKEN.VALID is 1 and EINITTOKEN.ATTRIBUTES.DEBUG is 1, SECS.ATTRIBUTES.DEBUG must be 1.
9. Commits SECS.MRENCLAVE, and sets SECS.MRSIGNER, SECS.ISVSVN, and SECS.ISVPRODID based on SIGSTRUCT.
10. Update the SECS as Initialized.

Periodically, EINIT polls for certain asynchronous events. If such an event is detected, it completes with failure code (ZF=1 and RAX = SGX_UNMASKED_EVENT), and RIP is incremented to point to the next instruction. These events includes external interrupts, non-maskable interrupts, system-management interrupts, machine checks, INIT signals, and the VMX-preemption timer. EINIT does not fail if the pending event is inhibited (e.g., external interrupts could be inhibited due to blocking by MOV SS blocking or by STI).

The following bits in RFLAGS are cleared: CF, PF, AF, OF, and SF. When the instruction completes with an error, RFLAGS.ZF is set to 1, and the corresponding error bit is set in RAX. If no error occurs, RFLAGS.ZF is cleared and RAX is set to 0.

The error codes are:

Table 38-25. EINIT Return Value in RAX

Error Code (see Table 38-4)	Description
No Error	EINIT successful.
SGX_INVALID_SIG_STRUCT	If SIGSTRUCT contained an invalid value.
SGX_INVALID_ATTRIBUTE	If SIGSTRUCT contains an unauthorized attributes mask.
SGX_INVALID_MEASUREMENT	If SIGSTRUCT contains an incorrect measurement. If EINITTOKEN contains an incorrect measurement.
SGX_INVALID_SIGNATURE	If signature does not validate with enclosed public key.
SGX_INVALID_LICENSE	If license is invalid.
SGX_INVALID_CPUSVN	If license SVN is unsupported.
SGX_UNMASKED_EVENT	If an unmasked event is received before the instruction completes its operation.

Concurrency Restrictions

Table 38-26. Base Concurrency Restrictions of EINIT

Leaf	Parameter	Base Concurrency Restrictions		
		Access	On Conflict	SGX_CONFLICT VM Exit Qualification
EINIT	SECS [DS:RCX]	Shared	#GP	

Table 38-27. Additional Concurrency Restrictions of ENIT

Leaf	Parameter	Additional Concurrency Restrictions					
		vs. EACCEPT, EACCEPTCOPY, EMODPE, EMODPR, EMODT		vs. EADD, EEXTEND, EINIT		vs. ETRACK, ETRACKC	
		Access	On Conflict	Access	On Conflict	Access	On Conflict
EINIT	SECS [DS:RCX]	Concurrent		Exclusive	#GP	Concurrent	

Operation

Temp Variables in EINIT Operational Flow

Name	Type	Size	Description
TMP_SIG	SIGSTRUCT	1808Bytes	Temp space for SIGSTRUCT.
TMP_TOKEN	EINITTOKEN	304Bytes	Temp space for EINITTOKEN.
TMP_MRENCLAVE		32Bytes	Temp space for calculating MRENCLAVE.
TMP_MRSIGNER		32Bytes	Temp space for calculating MRSIGNER.
CONTROLLED_ATTRIBUTES	ATTRIBUTES	16Bytes	Constant mask of all ATTRIBUTE bits that can only be set for authorized enclaves.
TMP_KEYDEPENDENCIES	Buffer	224Bytes	Temp space for key derivation.
TMP_EINITTOKENKEY		16Bytes	Temp space for the derived EINITTOKEN Key.
TMP_SIG_PADDING	PKCS Padding Buffer	352Bytes	The value of the top 352 bytes from the computation of Signature[3] modulo MRSIGNER.

```
(* make sure SIGSTRUCT and SECS are aligned *)
IF ( (DS:RBX is not 4KByte Aligned) or (DS:RCX is not 4KByte Aligned) )
    THEN #GP(0); FI;

(* make sure the EINITTOKEN is aligned *)
IF (DS:RDX is not 512Byte Aligned)
    THEN #GP(0); FI;

(* make sure the SECS is inside the EPC *)
IF (DS:RCX does not resolve within an EPC)
    THEN #PF(DS:RCX); FI;

TMP_SIG[14463:0] := DS:RBX[14463:0]; // 1808 bytes
TMP_TOKEN[2423:0] := DS:RDX[2423:0]; // 304 bytes
```

```
(* Verify SIGSTRUCT Header. *)
IF ( (TMP_SIG.HEADER ≠ 06000000E10000000000010000000000h) or
     ((TMP_SIG.VENDOR ≠ 0) and (TMP_SIG.VENDOR ≠ 00008086h) ) or
     (TMP_SIG HEADER2 ≠ 01010000600000006000000001000000h) or
     (TMP_SIG.EXPONENT   ≠ 00000003h) or (Reserved space is not 0's) )
     THEN
          RFLAGS.ZF := 1;
          RAX := SGX_INVALID_SIG_STRUCT;
          GOTO EXIT;
FI;

(* Open "Event Window" Check for Interrupts. Verify signature using embedded public key, q1, and q2. Save upper 352 bytes of the
PKCS1.5 encoded message into the TMP_SIG_PADDING*)
IF (interrupt was pending) THEN
     RFLAGS.ZF := 1;
     RAX := SGX_UNMASKED_EVENT;
     GOTO EXIT;
FI
IF (signature failed to verify) THEN
     RFLAGS.ZF := 1;
     RAX := SGX_INVALID_SIGNATURE;
     GOTO EXIT;
FI;
(*Close "Event Window" *)

(* make sure no other Intel SGX instruction is modifying SECS*)
IF (Other instructions modifying SECS)
     THEN #GP(0); FI;

IF ( (EPCM(DS:RCX). VALID = 0) or (EPCM(DS:RCX).PT ≠ PT_SECS) )
     THEN #PF(DS:RCX); FI;

(* Verify ISVFAMILYID is not used on an enclave with KSS disabled *)
IF ((TMP_SIG.ISVFAMILYID != 0) AND (DS:RCX.ATTRIBUTES.KSS == 0))
     THEN
       RFLAGS.ZF := 1;
       RAX := SGX_INVALID_SIG_STRUCT;
       GOTO EXIT;
FI;

(* make sure no other instruction is accessing MRENCLAVE or ATTRIBUTES.INIT *)
IF ( (Other instruction modifying MRENCLAVE) or (Other instructions modifying the SECS's Initialized state))
     THEN #GP(0); FI;

(* Calculate finalized version of MRENCLAVE *)
(* SHA256 algorithm requires one last update that compresses the length of the hashed message into the output SHA256 digest *)
TMP_ENCLAVE := SHA256FINAL( (DS:RCX).MRENCLAVE, enclave's MRENCLAVE update count *512);

(* Verify MRENCLAVE from SIGSTRUCT *)
IF (TMP_SIG.ENCLAVEHASH ≠ TMP_MRENCLAVE)
     RFLAGS.ZF := 1;
     RAX := SGX_INVALID_MEASUREMENT;
     GOTO EXIT;
FI;
```

```
TMP_MRSIGNER := SHA256(TMP_SIG.MODULUS)

(* if controlled ATTRIBUTES are set, SIGSTRUCT must be signed using an authorized key *)
CONTROLLED_ATTRIBUTES := 0000000000000020H;
IF ( ( (DS:RCX.ATTRIBUTES & CONTROLLED_ATTRIBUTES) ≠ 0) and (TMP_MRSIGNER ≠ IA32_SGXLEPUBKEYHASH) )
    RFLAGS.ZF := 1;
    RAX := SGX_INVALID_ATTRIBUTE;
    GOTO EXIT;
FI;

(* Verify SIGSTRUCT.ATTRIBUTE requirements are met *)
IF ( (DS:RCX.ATTRIBUTES & TMP_SIG.ATTRIBUTEMASK) ≠ (TMP_SIG.ATTRIBUTE & TMP_SIG.ATTRIBUTEMASK) )
    RFLAGS.ZF := 1;
    RAX := SGX_INVALID_ATTRIBUTE;
    GOTO EXIT;
FI;

( *Verify SIGSTRUCT.MISCSELECT requirements are met *)
IF ( (DS:RCX.MISCSELECT & TMP_SIG.MISCMASK) ≠ (TMP_SIG.MISCSELECT & TMP_SIG.MISCMASK) )
    THEN
        RFLAGS.ZF := 1;
        RAX := SGX_INVALID_ATTRIBUTE;
    GOTO EXIT
FI;

IF (CPUID.(EAX=12H, ECX=1):EAX[6] = 1)
    IF ( DS:RCX.CET_ATTRIBUTES & TMP_SIG.CET_ATTRIBUTES_MASK ≠ TMP_SIG.CET_ATTRIBUTES &
     TMP_SIG.CET_ATTRIB-UTES_MASK )
        THEN
            RFLAGS.ZF := 1;
            RAX := SGX_INVALID_ATTRIBUTE;
            GOTO EXIT
    FI;
FI;

(* If EINITTOKEN.VALID[0] is 0, verify the enclave is signed by an authorized key *)
IF (TMP_TOKEN.VALID[0] = 0)
    IF (TMP_MRSIGNER ≠ IA32_SGXLEPUBKEYHASH)
        RFLAGS.ZF := 1;
        RAX := SGX_INVALID_EINITTOKEN;
        GOTO EXIT;
    FI;
    GOTO COMMIT;
FI;

(* Debug Launch Enclave cannot launch Production Enclaves *)
IF ( (DS:RDX.MASKEDATTRIBUTESLE.DEBUG = 1) and (DS:RCX.ATTRIBUTES.DEBUG = 0) )
    RFLAGS.ZF := 1;
    RAX := SGX_INVALID_EINITTOKEN;
    GOTO EXIT;
FI;
```

```
(* Check reserve space in EINIT token includes reserved regions and upper bits in valid field *)
IF (TMP_TOKEN reserved space is not clear)
    RFLAGS.ZF := 1;
    RAX := SGX_INVALID_EINITTOKEN;
    GOTO EXIT;
FI;

(* EINIT token must not have been created by a configuration beyond the current CPU configuration *)
IF (TMP_TOKEN.CPUSVN must not be a configuration beyond CR_CPUSVN)
    RFLAGS.ZF := 1;
    RAX := SGX_INVALID_CPUSVN;
    GOTO EXIT;
FI;

(* Derive Launch key used to calculate EINITTOKEN.MAC *)
HARDCODED_PKCS1_5_PADDING[15:0] := 0100H;
HARDCODED_PKCS1_5_PADDING[2655:16] := SignExtend330Byte(-1); // 330 bytes of 0FFH
HARDCODED_PKCS1_5_PADDING[2815:2656] := 2004000501020403650148866009060D30313000H;

TMP_KEYDEPENDENCIES.KEYNAME := EINITTOKEN_KEY;
TMP_KEYDEPENDENCIES.ISVFAMILYID := 0;
TMP_KEYDEPENDENCIES.ISVEXTPRODID := 0;
TMP_KEYDEPENDENCIES.ISVPRODID := TMP_TOKEN.ISVPRODIDLE;
TMP_KEYDEPENDENCIES.ISVSVN := TMP_TOKEN.ISVSVNLE;
TMP_KEYDEPENDENCIES.SGXOWNEREPOCH := CR_SGXOWNEREPOCH;
TMP_KEYDEPENDENCIES.ATTRIBUTES := TMP_TOKEN.MASKEDATTRIBUTESLE;
TMP_KEYDEPENDENCIES.ATTRIBUTESMASK := 0;
TMP_KEYDEPENDENCIES.MRENCLAVE := 0;
TMP_KEYDEPENDENCIES.MRSIGNER := IA32_SGXLEPUBKEYHASH;
TMP_KEYDEPENDENCIES.KEYID := TMP_TOKEN.KEYID;
TMP_KEYDEPENDENCIES.SEAL_KEY_FUSES := CR_SEAL_FUSES;
TMP_KEYDEPENDENCIES.CPUSVN := TMP_TOKEN.CPUSVNLE;
TMP_KEYDEPENDENCIES.MISCSELECT := TMP_TOKEN.MASKEDMISCSELECTLE;
TMP_KEYDEPENDENCIES.MISCMASK := 0;
TMP_KEYDEPENDENCIES.PADDING := HARDCODED_PKCS1_5_PADDING;
TMP_KEYDEPENDENCIES.KEYPOLICY := 0;
TMP_KEYDEPENDENCIES.CONFIGID := 0;
TMP_KEYDEPENDENCIES.CONFIGSVN := 0;
IF (CPUID.(EAX=12H, ECX=1):EAX[6] = 1))
    TMP_KEYDEPENDENCIES.CET_ATTRIBUTES := TMP_TOKEN.CET_MASKED_ATTRIBUTES_ LE;
    TMP_KEYDEPENDENCIES.CET_ATTRIBUTES_MASK := 0;
FI;

(* Calculate the derived key*)
TMP_EINITTOKENKEY := derivekey(TMP_KEYDEPENDENCIES);

(* Verify EINITTOKEN was generated using this CPU's Launch key and that it has not been modified since issuing by the Launch
Enclave. Only 192 bytes of EINITTOKEN are CMACed *)
IF (TMP_TOKEN.MAC ≠ CMAC(TMP_EINITTOKENKEY, TMP_TOKEN[1535:0] ) )
    RFLAGS.ZF := 1;
    RAX := SGX_INVALID_EINITTOKEN;
    GOTO EXIT;
FI;
```

```
(* Verify EINITTOKEN (RDX) is for this enclave *)
IF ( (TMP_TOKEN.MRENCLAVE ≠ TMP_MRENCLAVE) or (TMP_TOKEN.MRSIGNER ≠ TMP_MRSIGNER) )
    RFLAGS.ZF := 1;
    RAX := SGX_INVALID_MEASUREMENT;
    GOTO EXIT;
FI;

(* Verify ATTRIBUTES in EINITTOKEN are the same as the enclave's *)
IF (TMP_TOKEN.ATTRIBUTES ≠ DS:RCX.ATTRIBUTES)
    RFLAGS.ZF := 1;
    RAX := SGX_INVALID_EINIT_ATTRIBUTE;
    GOTO EXIT;
FI;

COMMIT:
(* Commit changes to the SECS; Set ISVPRODID, ISVSVN, MRSIGNER, INIT ATTRIBUTE fields in SECS (RCX) *)
DS:RCX.MRENCLAVE := TMP_MRENCLAVE;
(* MRSIGNER stores a SHA256 in little endian implemented natively on x86 *)
DS:RCX.MRSIGNER := TMP_MRSIGNER;
DS:RCX.ISVEXTPRODID := TMP_SIG.ISVEXTPRODID;
DS:RCX.ISVPRODID := TMP_SIG.ISVPRODID;
DS:RCX.ISVSVN := TMP_SIG.ISVSVN;
DS:RCX.ISVFAMILYID := TMP_SIG.ISVFAMILYID;
DS:RCX.PADDING := TMP_SIG_PADDING;

(* Mark the SECS as initialized *)
Update DS:RCX to initialized;

(* Set RAX and ZF for success*)
    RFLAGS.ZF := 0;
    RAX := 0;
EXIT:
RFLAGS.CF,PF,AF,OF,SF := 0;
```

Flags Affected

ZF is cleared if successful, otherwise ZF is set and RAX contains the error code. CF, PF, AF, OF, SF are cleared.

Protected Mode Exceptions

#GP(0)	If a memory operand is not properly aligned.
	If another instruction is modifying the SECS.
	If the enclave is already initialized.
	If the SECS.MRENCLAVE is in use.
#PF(error code)	If a page fault occurs in accessing memory operands.
	If RCX does not resolve in an EPC page.
	If the memory address is not a valid, uninitialized SECS.

64-Bit Mode Exceptions

#GP(0)	If a memory operand is not properly aligned.
	If another instruction is modifying the SECS.
	If the enclave is already initialized.
	If the SECS.MRENCLAVE is in use.

#PF(error code)	If a page fault occurs in accessing memory operands. If RCX does not resolve in an EPC page. If the memory address is not a valid, uninitialized SECS.

ELDB/ELDU/ELDBC/ELDUC—Load an EPC Page and Mark its State

Opcode/ Instruction	Op/En	64/32 bit Mode Support	CPUID Feature Flag	Description
EAX = 07H ENCLS[ELDB]	IR	V/V	SGX1	This leaf function loads, verifies an EPC page and marks the page as blocked.
EAX = 08H ENCLS[ELDU]	IR	V/V	SGX1	This leaf function loads, verifies an EPC page and marks the page as unblocked.
EAX = 12H ENCLS[ELDBC]	IR	V/V	EAX[6]	This leaf function behaves lie ELDB but with improved conflict handling for oversubscription.
EAX = 13H ENCLS[ELDUC]	IR	V/V	EAX[6]	This leaf function behaves like ELDU but with improved conflict handling for oversubscription.

Instruction Operand Encoding

Op/En	EAX		RBX	RCX	RDX
IR	ELDB/ELDU (In)	Return error code (Out)	Address of the PAGEINFO (In)	Address of the EPC page (In)	Address of the version-array slot (In)

Description

This leaf function copies a page from regular main memory to the EPC. As part of the copying process, the page is cryptographically authenticated and decrypted. This instruction can only be executed when current privilege level is 0.

The ELDB leaf function sets the BLOCK bit in the EPCM entry for the destination page in the EPC after copying. The ELDU leaf function clears the BLOCK bit in the EPCM entry for the destination page in the EPC after copying.

RBX contains the effective address of a PAGEINFO structure; RCX contains the effective address of the destination EPC page; RDX holds the effective address of the version array slot that holds the version of the page.

The ELDBC/ELDUC leafs are very similar to ELDB and ELDU. They provide an error code on the concurrency conflict for any of the pages which need to acquire a lock. These include the destination, SECS, and VA slot.

The table below provides additional information on the memory parameter of ELDB/ELDU leaf functions.

ELDB/ELDU/ELDBC/ELBUC Memory Parameter Semantics

PAGEINFO	PAGEINFO.SRCPGE	PAGEINFO.PCMD	PAGEINFO.SECS	EPCPAGE	Version-Array Slot
Non-enclave read access	Non-enclave read access	Non-enclave read access	Enclave read/write access	Read/Write access permitted by Enclave	Read/Write access permitted by Enclave

The error codes are:

Table 38-28. ELDB/ELDU/ELDBC/ELBUC Return Value in RAX

Error Code (see Table 38-4)	Description
No Error	ELDB/ELDU successful.
SGX_MAC_COMPARE_FAIL	If the MAC check fails.

Concurrency Restrictions

Table 38-29. Base Concurrency Restrictions of ELDB/ELDU/ELDBC/ELBUC

Leaf	Parameter	Base Concurrency Restrictions		
		Access	On Conflict	SGX_CONFLICT VM Exit Qualification
ELDB/ELDU	Target [DS:RCX]	Exclusive	#GP	EPC_PAGE_CONFLICT_EXCEPTION
	VA [DS:RDX]	Shared	#GP	
	SECS [DS:RBX]PAGEINFO.SECS	Shared	#GP	
ELDBC/ELBUC	Target [DS:RCX]	Exclusive	SGX_EPC_PAGE_CONFLICT	EPC_PAGE_CONFLICT_ERROR
	VA [DS:RDX]	Shared	SGX_EPC_PAGE_CONFLICT	
	SECS [DS:RBX]PAGEINFO.SECS	Shared	SGX_EPC_PAGE_CONFLICT	

Table 38-30. Additional Concurrency Restrictions of ELDB/ELDU/ELDBC/ELBUC

Leaf	Parameter	Additional Concurrency Restrictions					
		vs. EACCEPT, EACCEPTCOPY, EMODPE, EMODPR, EMODT		vs. EADD, EEXTEND, EINIT		vs. ETRACK, ETRACKC	
		Access	On Conflict	Access	On Conflict	Access	On Conflict
ELDB/ELDU	Target [DS:RCX]	Concurrent		Concurrent		Concurrent	
	VA [DS:RDX]	Concurrent		Concurrent		Concurrent	
	SECS [DS:RBX]PAGEINFO.SECS	Concurrent		Concurrent		Concurrent	
ELDBC/ELBUC	Target [DS:RCX]	Concurrent		Concurrent		Concurrent	
	VA [DS:RDX]	Concurrent		Concurrent		Concurrent	
	SECS [DS:RBX]PAGEINFO.SECS	Concurrent		Concurrent		Concurrent	

Operation

Temp Variables in ELDB/ELDU/ELDBC/ELBUC Operational Flow

Name	Type	Size (Bits)	Description
TMP_SRCPGE	Memory page	4KBytes	
TMP_SECS	Memory page	4KBytes	
TMP_PCMD	PCMD	128 Bytes	
TMP_HEADER	MACHEADER	128 Bytes	
TMP_VER	UINT64	64	
TMP_MAC	UINT128	128	
TMP_PK	UINT128	128	Page encryption/MAC key.
SCRATCH_PCMD	PCMD	128 Bytes	

```
(* Check PAGEINFO and EPCPAGE alignment *)
IF ( (DS:RBX is not 32Byte Aligned) or (DS:RCX is not 4KByte Aligned) )
    THEN #GP(0); FI;
```

```
IF (DS:RCX does not resolve within an EPC)
    THEN #PF(DS:RCX); FI;

(* Check VASLOT alignment *)
IF (DS:RDX is not 8Byte aligned)
    THEN #GP(0); FI;

IF (DS:RDX does not resolve within an EPC)
    THEN #PF(DS:RDX); FI;

TMP_SRCPGE := DS:RBX.SRCPGE;
TMP_SECS := DS:RBX.SECS;
TMP_PCMD := DS:RBX.PCMD;

(* Check alignment of PAGEINFO (RBX) linked parameters. Note: PCMD pointer is overlaid on top of PAGEINFO.SECINFO field *)
IF ( (DS:TMP_PCMD is not 128Byte aligned) or (DS:TMP_SRCPGE is not 4KByte aligned) )
    THEN #GP(0); FI;

(* Check concurrency of EPC by other Intel SGX instructions *)
IF (other instructions accessing EPC)
    THEN
    IF ((EAX==07h) OR (EAX==08h))   (* ELDB/ELDU *)
        THEN
            IF (<<VMX non-root operation>> AND
                    <<ENABLE_EPC_VIRTUALIZATION_EXTENSIONS>>)
                THEN
                    VMCS.Exit_reason := SGX_CONFLICT;
                    VMCS.Exit_qualification.code := EPC_PAGE_CONFLICT_EXCEPTION;
                    VMCS.Exit_qualification.error := 0;
                    VMCS.Guest-physical_address :=
                << translation of DS:RCX produced by paging >>;
                    VMCS.Guest-linear_address := DS:RCX;
                    Deliver VMEXIT;
                ELSE
                    #GP(0);
                FI;
            ELSE (* ELDBC/ELDUC *)
            IF (<<VMX non-root operation>> AND
                    <<ENABLE_EPC_VIRTUALIZATION_EXTENSIONS>>)
                THEN
                    VMCS.Exit_reason := SGX_CONFLICT;
                    VMCS.Exit_qualification.code := EPC_PAGE_CONFLICT_ERROR;
                    VMCS.Exit_qualification.error := SGX_EPC_PAGE_CONFLICT;
                    VMCS.Guest-physical_address :=
                << translation of DS:RCX produced by paging >>;
                    VMCS.Guest-linear_address := DS:RCX;
                    Deliver VMEXIT;
                ELSE
                RFLAGS.ZF := 1;
                RFLAGS.CF := 0;
                RAX := SGX_EPC_PAGE_CONFLICT;
                GOTO ERROR_EXIT;
                FI;
```

```
            FI;
FI;

(* Check concurrency of EPC and VASLOT by other Intel SGX instructions *)
IF (Other instructions modifying VA slot) THEN
    IF ((EAX==07h) OR (EAX==08h)) (* ELDB/ELDU *)
            THEN #GP(0);
    ELSE (* ELDBC/ELDUC *)
            RFLAGS.ZF := 1;
            RFLAGS.CF := 0;
            RAX := SGX_EPC_PAGE_CONFLICT;
            GOTO ERROR_EXIT;
    FI;
FI;

(* Verify EPCM attributes of EPC page, VA, and SECS *)
IF (EPCM(DS:RCX).VALID = 1)
    THEN #PF(DS:RCX); FI;

IF ( (EPCM(DS:RDX & ~0FFFH).VALID = 0) or (EPCM(DS:RDX & ~0FFFH).PT ≠ PT_VA) )
    THEN #PF(DS:RDX); FI;

(* Copy PCMD into scratch buffer *)
SCRATCH_PCMD[1023: 0] := DS:TMP_PCMD[1023:0];

(* Zero out TMP_HEADER*)
TMP_HEADER[sizeof(TMP_HEADER)-1: 0] := 0;

TMP_HEADER.SECINFO := SCRATCH_PCMD.SECINFO;
TMP_HEADER.RSVD := SCRATCH_PCMD.RSVD;
TMP_HEADER.LINADDR := DS:RBX.LINADDR;

(* Verify various attributes of SECS parameter *)
IF ( (TMP_HEADER.SECINFO.FLAGS.PT = PT_REG) or (TMP_HEADER.SECINFO.FLAGS.PT = PT_TCS) or
     (TMP_HEADER.SECINFO.FLAGS.PT = PT_TRIM) or
     (TMP_HEADER.SECINFO.FLAGS.PT = PT_SS_FIRST and CPUID.(EAX=12H, ECX=1):EAX[6] = 1) or
     (TMP_HEADER.SECINFO.FLAGS.PT = PT_SS_REST and CPUID.(EAX=12H, ECX=1):EAX[6] = 1))
    THEN
        IF ( DS:TMP_SECS is not 4KByte aligned)
            THEN #GP(0) FI;
        IF (DS:TMP_SECS does not resolve within an EPC)
            THEN #PF(DS:TMP_SECS) FI;
        IF ( Another instruction is currently modifying the SECS) THEN
            IF ((EAX==07h) OR (EAX==08h)) (* ELDB/ELDU *)
                THEN #GP(0);
            ELSE (* ELDBC/ELDUC *)
                RFLAGS.ZF := 1;
                RFLAGS.CF := 0;
                RAX := SGX_EPC_PAGE_CONFLICT;
                GOTO ERROR_EXIT;
            FI;
        FI;
        TMP_HEADER.EID := DS:TMP_SECS.EID;
    ELSE
```

```
        (* TMP_HEADER.SECINFO.FLAGS.PT is PT_SECS or PT_VA which do not have a parent SECS, and hence no EID binding *)
        TMP_HEADER.EID := 0;
        IF (DS:TMP_SECS ≠ 0)
            THEN #GP(0) FI;
FI;

(* Copy 4KBytes SRCPGE to secure location *)
DS:RCX[32767: 0] := DS:TMP_SRCPGE[32767: 0];
TMP_VER := DS:RDX[63:0];

(* Decrypt and MAC page. AES_GCM_DEC has 2 outputs, {plain text, MAC} *)
(* Parameters for AES_GCM_DEC {Key, Counter, ..} *)
{DS:RCX, TMP_MAC} := AES_GCM_DEC(CR_BASE_PK, TMP_VER << 32, TMP_HEADER, 128, DS:RCX, 4096);

IF ( (TMP_MAC ≠ DS:TMP_PCMD.MAC) )
    THEN
        RFLAGS.ZF := 1;
        RAX := SGX_MAC_COMPARE_FAIL;
        GOTO ERROR_EXIT;
FI;

(* Clear VA Slot *)
DS:RDX := 0

(* Commit EPCM changes *)
EPCM(DS:RCX).PT := TMP_HEADER.SECINFO.FLAGS.PT;
EPCM(DS:RCX).RWX := TMP_HEADER.SECINFO.FLAGS.RWX;
EPCM(DS:RCX).PENDING := TMP_HEADER.SECINFO.FLAGS.PENDING;
EPCM(DS:RCX).MODIFIED := TMP_HEADER.SECINFO.FLAGS.MODIFIED;
EPCM(DS:RCX).PR := TMP_HEADER.SECINFO.FLAGS.PR;
EPCM(DS:RCX).ENCLAVEADDRESS := TMP_HEADER.LINADDR;

IF ( ((EAX = 07H) or (EAX = 12H)) and (TMP_HEADER.SECINFO.FLAGS.PT is NOT PT_SECS or PT_VA))
    THEN
        EPCM(DS:RCX).BLOCKED := 1;
    ELSE
        EPCM(DS:RCX).BLOCKED := 0;
FI;

IF (TMP_HEADER.SECINFO.FLAGS.PT is PT_SECS)
    << store translation of DS:RCX produced by paging in SECS(DS:RCX).ENCLAVECONTEXT >>
FI;

EPCM(DS:RCX). VALID := 1;

RAX := 0;
RFLAGS.ZF := 0;

ERROR_EXIT:
RFLAGS.CF,PF,AF,OF,SF := 0;
```

Flags Affected

Sets ZF if unsuccessful, otherwise cleared and RAX returns error code. Clears CF, PF, AF, OF, SF.

Protected Mode Exceptions

#GP(0)	If a memory operand effective address is outside the DS segment limit.
	If a memory operand is not properly aligned.
	If the instruction's EPC resource is in use by others.
	If the instruction fails to verify MAC.
	If the version-array slot is in use.
	If the parameters fail consistency checks.
#PF(error code)	If a page fault occurs in accessing memory operands.
	If a memory operand expected to be in EPC does not resolve to an EPC page.
	If one of the EPC memory operands has incorrect page type.
	If the destination EPC page is already valid.

64-Bit Mode Exceptions

#GP(0)	If a memory operand is non-canonical form.
	If a memory operand is not properly aligned.
	If the instruction's EPC resource is in use by others.
	If the instruction fails to verify MAC.
	If the version-array slot is in use.
	If the parameters fail consistency checks.
#PF(error code)	If a page fault occurs in accessing memory operands.
	If a memory operand expected to be in EPC does not resolve to an EPC page.
	If one of the EPC memory operands has incorrect page type.
	If the destination EPC page is already valid.

EMODPR—Restrict the Permissions of an EPC Page

Opcode/ Instruction	Op/En	64/32 bit Mode Support	CPUID Feature Flag	Description
EAX = 0EH ENCLS[EMODPR]	IR	V/V	SGX2	This leaf function restricts the access rights associated with a EPC page in an initialized enclave.

Instruction Operand Encoding

Op/En	EAX		RBX	RCX
IR	EMODPR (In)	Return Error Code (Out)	Address of a SECINFO (In)	Address of the destination EPC page (In)

Description

This leaf function restricts the access rights associated with an EPC page in an initialized enclave. THE RWX bits of the SECINFO parameter are treated as a permissions mask; supplying a value that does not restrict the page permissions will have no effect. This instruction can only be executed when current privilege level is 0.

RBX contains the effective address of a SECINFO structure while RCX contains the effective address of an EPC page. The table below provides additional information on the memory parameter of the EMODPR leaf function.

EMODPR Memory Parameter Semantics

SECINFO	EPCPAGE
Read access permitted by Non Enclave	Read/Write access permitted by Enclave

The instruction faults if any of the following:

EMODPR Faulting Conditions

The operands are not properly aligned.	If unsupported security attributes are set.
The Enclave is not initialized.	SECS is locked by another thread.
The EPC page is locked by another thread.	RCX does not contain an effective address of an EPC page in the running enclave.
The EPC page is not valid.	

The error codes are:

Table 38-31. EMODPR Return Value in RAX

Error Code (see Table 38-4)	Description
No Error	EMODPR successful.
SGX_PAGE_NOT_MODIFIABLE	The EPC page cannot be modified because it is in the PENDING or MODIFIED state.
SGX_EPC_PAGE_CONFLICT	Page is being written by EADD, EAUG, ECREATE, ELDU/B, EMODT, or EWB.

Concurrency Restrictions

Table 38-32. Base Concurrency Restrictions of EMODPR

Leaf	Parameter	Base Concurrency Restrictions		
		Access	On Conflict	SGX_CONFLICT VM Exit Qualification
EMODPR	Target [DS:RCX]	Shared	#GP	

Table 38-33. Additional Concurrency Restrictions of EMODPR

Leaf	Parameter	Additional Concurrency Restrictions					
		vs. EACCEPT, EACCEPTCOPY, EMODPE, EMODPR, EMODT		vs. EADD, EEXTEND, EINIT		vs. ETRACK, ETRACKC	
		Access	On Conflict	Access	On Conflict	Access	On Conflict
EMODPR	Target [DS:RCX]	Exclusive	SGX_EPC_PAGE_CONFLICT	Concurrent		Concurrent	

Operation

Temp Variables in EMODPR Operational Flow

Name	Type	Size (bits)	Description
TMP_SECS	Effective Address	32/64	Physical address of SECS to which EPC operand belongs.
SCRATCH_SECINFO	SECINFO	512	Scratch storage for holding the contents of DS:RBX.

```
IF (DS:RBX is not 64Byte Aligned)
    THEN #GP(0); FI;

IF (DS:RCX is not 4KByte Aligned)
    THEN #GP(0); FI;

IF (DS:RCX does not resolve within an EPC)
    THEN #PF(DS:RCX); FI;

SCRATCH_SECINFO := DS:RBX;

(* Check for misconfigured SECINFO flags*)
IF ( (SCRATCH_SECINFO reserved fields are not zero ) or
    (SCRATCH_SECINFO.FLAGS.R is 0 and SCRATCH_SECINFO.FLAGS.W is not 0) )
    THEN #GP(0); FI;

(* Check concurrency with SGX1 or SGX2 instructions on the EPC page *)
IF (SGX1 or other SGX2 instructions accessing EPC page)
    THEN #GP(0); FI;

IF (EPCM(DS:RCX).VALID is 0 )
    THEN #PF(DS:RCX); FI;

(* Check the EPC page for concurrency *)
IF (EPC page in use by another SGX2 instruction)
    THEN
        RFLAGS.ZF := 1;
        RAX := SGX_EPC_PAGE_CONFLICT;
        GOTO DONE;
FI;

IF (EPCM(DS:RCX).PENDING is not 0 or (EPCM(DS:RCX).MODIFIED is not 0) )
    THEN
        RFLAGS.ZF := 1;
        RAX := SGX_PAGE_NOT_MODIFIABLE;
```

```
        GOTO DONE;
FI;

IF (EPCM(DS:RCX).PT is not PT_REG)
    THEN #PF(DS:RCX); FI;

TMP_SECS := GET_SECS_ADDRESS

IF (TMP_SECS.ATTRIBUTES.INIT = 0)
  THEN #GP(0); FI;

(* Set the PR bit to indicate that permission restriction is in progress *)
EPCM(DS:RCX).PR := 1;

(* Update EPCM permissions *)
EPCM(DS:RCX).R := EPCM(DS:RCX).R & SCRATCH_SECINFO.FLAGS.R;
EPCM(DS:RCX).W := EPCM(DS:RCX).W & SCRATCH_SECINFO.FLAGS.W;
EPCM(DS:RCX).X := EPCM(DS:RCX).X & SCRATCH_SECINFO.FLAGS.X;

RFLAGS.ZF := 0;
RAX := 0;

DONE:
RFLAGS.CF,PF,AF,OF,SF := 0;
```

Flags Affected

Sets ZF if page is not modifiable or if other SGX2 instructions are executing concurrently, otherwise cleared. Clears CF, PF, AF, OF, SF.

Protected Mode Exceptions

#GP(0)	If a memory operand effective address is outside the DS segment limit.
	If a memory operand is not properly aligned.
	If a memory operand is locked.
#PF(error code)	If a page fault occurs in accessing memory operands.
	If a memory operand is not an EPC page.

64-Bit Mode Exceptions

#GP(0)	If a memory operand is non-canonical form.
	If a memory operand is not properly aligned.
	If a memory operand is locked.
#PF(error code)	If a page fault occurs in accessing memory operands.
	If a memory operand is not an EPC page.

EMODT—Change the Type of an EPC Page

Opcode/ Instruction	Op/En	64/32 bit Mode Support	CPUID Feature Flag	Description
EAX = 0FH ENCLS[EMODT]	IR	V/V	SGX2	This leaf function changes the type of an existing EPC page.

Instruction Operand Encoding

Op/En	EAX		RBX	RCX
IR	EMODT (In)	Return Error Code (Out)	Address of a SECINFO (In)	Address of the destination EPC page (In)

Description

This leaf function modifies the type of an EPC page. The security attributes are configured to prevent access to the EPC page at its new type until a corresponding invocation of the EACCEPT leaf confirms the modification. This instruction can only be executed when current privilege level is 0.

RBX contains the effective address of a SECINFO structure while RCX contains the effective address of an EPC page. The table below provides additional information on the memory parameter of the EMODT leaf function.

EMODT Memory Parameter Semantics

SECINFO	EPCPAGE
Read access permitted by Non Enclave	Read/Write access permitted by Enclave

The instruction faults if any of the following:

EMODT Faulting Conditions

The operands are not properly aligned.	If unsupported security attributes are set.
The Enclave is not initialized.	SECS is locked by another thread.
The EPC page is locked by another thread.	RCX does not contain an effective address of an EPC page in the running enclave.
The EPC page is not valid.	

The error codes are:

Table 38-34. EMODT Return Value in RAX

Error Code (see Table 38-4)	Description
No Error	EMODT successful.
SGX_PAGE_NOT_MODIFIABLE	The EPC page cannot be modified because it is in the PENDING or MODIFIED state.
SGX_EPC_PAGE_CONFLICT	Page is being written by EADD, EAUG, ECREATE, ELDU/B, EMODPR, or EWB.

Concurrency Restrictions

Table 38-35. Base Concurrency Restrictions of EMODT

Leaf	Parameter	Base Concurrency Restrictions		
		Access	On Conflict	SGX_CONFLICT VM Exit Qualification
EMODT	Target [DS:RCX]	Exclusive	SGX_EPC_PAGE_CONFLICT	EPC_PAGE_CONFLICT_ERROR

Table 38-36. Additional Concurrency Restrictions of EMODT

Leaf	Parameter	Additional Concurrency Restrictions					
		vs. EACCEPT, EACCEPTCOPY, EMODPE, EMODPR, EMODT		vs. EADD, EEXTEND, EINIT		vs. ETRACK, ETRACKC	
		Access	On Conflict	Access	On Conflict	Access	On Conflict
EMODT	Target [DS:RCX]	Exclusive	SGX_EPC_PAGE_CONFLICT	Concurrent		Concurrent	

Operation

Temp Variables in EMODT Operational Flow

Name	Type	Size (bits)	Description
TMP_SECS	Effective Address	32/64	Physical address of SECS to which EPC operand belongs.
SCRATCH_SECINFO	SECINFO	512	Scratch storage for holding the contents of DS:RBX.

```
IF (DS:RBX is not 64Byte Aligned)
    THEN #GP(0); FI;

IF (DS:RCX is not 4KByte Aligned)
    THEN #GP(0); FI;

IF (DS:RCX does not resolve within an EPC)
    THEN #PF(DS:RCX); FI;

SCRATCH_SECINFO := DS:RBX;

(* Check for misconfigured SECINFO flags*)
IF ( (SCRATCH_SECINFO reserved fields are not zero ) or
    !(SCRATCH_SECINFO.FLAGS.PT is PT_TCS or SCRATCH_SECINFO.FLAGS.PT is PT_TRIM) )
    THEN #GP(0); FI;

(* Check concurrency with SGX1 instructions on the EPC page *)
IF (other SGX1 instructions accessing EPC page)
    THEN
        RFLAGS.ZF := 1;
        RAX := SGX_EPC_PAGE_CONFLICT;
        GOTO DONE;
FI;

IF (EPCM(DS:RCX).VALID is 0)
    THEN #PF(DS:RCX); FI;

(* Check the EPC page for concurrency *)
IF (EPC page in use by another SGX2 instruction)
    THEN
        RFLAGS.ZF := 1;
        RAX := SGX_EPC_PAGE_CONFLICT;
        GOTO DONE;
```

```
FI;

IF (!(EPCM(DS:RCX).PT is PT_REG or
    ((EPCM(DS:RCX).PT is PT_TCS or PT_SS_FIRST or PT_SS_REST) and SCRATCH_SECINFO.FLAGS.PT is PT_TRIM)))
        THEN #PF(DS:RCX); FI;

IF (EPCM(DS:RCX).PENDING is not 0 or (EPCM(DS:RCX).MODIFIED is not 0) )
    THEN
        RFLAGS.ZF := 1;
        RAX := SGX_PAGE_NOT_MODIFIABLE;
        GOTO DONE;
FI;

TMP_SECS := GET_SECS_ADDRESS

IF (TMP_SECS.ATTRIBUTES.INIT = 0)
    THEN #GP(0); FI;

(* Update EPCM fields *)
EPCM(DS:RCX).PR := 0;
EPCM(DS:RCX).MODIFIED := 1;
EPCM(DS:RCX).R := 0;
EPCM(DS:RCX).W := 0;
EPCM(DS:RCX).X := 0;
EPCM(DS:RCX).PT := SCRATCH_SECINFO.FLAGS.PT;

RFLAGS.ZF := 0;
RAX := 0;

DONE:
RFLAGS.CF,PF,AF,OF,SF := 0;
```

Flags Affected

Sets ZF if page is not modifiable or if other SGX2 instructions are executing concurrently, otherwise cleared. Clears CF, PF, AF, OF, SF.

Protected Mode Exceptions

#GP(0)	If a memory operand effective address is outside the DS segment limit.
	If a memory operand is not properly aligned.
	If a memory operand is locked.
#PF(error code)	If a page fault occurs in accessing memory operands.
	If a memory operand is not an EPC page.

64-Bit Mode Exceptions

#GP(0)	If a memory operand is non-canonical form.
	If a memory operand is not properly aligned.
	If a memory operand is locked.
#PF(error code)	If a page fault occurs in accessing memory operands.
	If a memory operand is not an EPC page.

EPA—Add Version Array

Opcode/ Instruction	Op/En	64/32 bit Mode Support	CPUID Feature Flag	Description
EAX = 0AH ENCLS[EPA]	IR	V/V	SGX1	This leaf function adds a Version Array to the EPC.

Instruction Operand Encoding

Op/En	EAX	RBX	RCX
IR	EPA (In)	PT_VA (In, Constant)	Effective address of the EPC page (In)

Description

This leaf function creates an empty version array in the EPC page whose logical address is given by DS:RCX, and sets up EPCM attributes for that page. At the time of execution of this instruction, the register RBX must be set to PT_VA.

The table below provides additional information on the memory parameter of EPA leaf function.

EPA Memory Parameter Semantics

EPCPAGE
Write access permitted by Enclave

Concurrency Restrictions

Table 38-37. Base Concurrency Restrictions of EPA

Leaf	Parameter	Base Concurrency Restrictions		
		Access	On Conflict	SGX_CONFLICT VM Exit Qualification
EPA	VA [DS:RCX]	Exclusive	#GP	EPC_PAGE_CONFLICT_EXCEPTION

Table 38-38. Additional Concurrency Restrictions of EPA

Leaf	Parameter	Additional Concurrency Restrictions					
		vs. EACCEPT, EACCEPTCOPY, EMODPE, EMODPR, EMODT		vs. EADD, EEXTEND, EINIT		vs. ETRACK, ETRACKC	
		Access	On Conflict	Access	On Conflict	Access	On Conflict
EPA	VA [DS:RCX]	Concurrent	L	Concurrent		Concurrent	

Operation

```
IF (RBX ≠ PT_VA or DS:RCX is not 4KByte Aligned)
    THEN #GP(0); FI;

IF (DS:RCX does not resolve within an EPC)
    THEN #PF(DS:RCX); FI;

(* Check concurrency with other Intel SGX instructions *)
IF (Other Intel SGX instructions accessing the page)
    THEN
        IF (<<VMX non-root operation>> AND <<ENABLE_EPC_VIRTUALIZATION_EXTENSIONS>>)
```

```
                THEN
                    VMCS.Exit_reason := SGX_CONFLICT;
                    VMCS.Exit_qualification.code := EPC_PAGE_CONFLICT_EXCEPTION;
                    VMCS.Exit_qualification.error := 0;
                    VMCS.Guest-physical_address := << translation of DS:RCX produced by paging >>;
                    VMCS.Guest-linear_address := DS:RCX;
                Deliver VMEXIT;
                ELSE
                    #GP(0);
            FI;
FI;

(* Check EPC page must be empty *)
IF (EPCM(DS:RCX). VALID ≠ 0)
    THEN #PF(DS:RCX); FI;

(* Clears EPC page *)
DS:RCX[32767:0] := 0;

EPCM(DS:RCX).PT := PT_VA;
EPCM(DS:RCX).ENCLAVEADDRESS := 0;
EPCM(DS:RCX).BLOCKED := 0;
EPCM(DS:RCX).PENDING := 0;
EPCM(DS:RCX).MODIFIED := 0;
EPCM(DS:RCX).PR := 0;
EPCM(DS:RCX).RWX := 0;
EPCM(DS:RCX).VALID := 1;
```

Flags Affected

None

Protected Mode Exceptions

#GP(0)	If a memory operand effective address is outside the DS segment limit.
	If a memory operand is not properly aligned.
	If another Intel SGX instruction is accessing the EPC page.
	If RBX is not set to PT_VA.
#PF(error code)	If a page fault occurs in accessing memory operands.
	If a memory operand is not an EPC page.
	If the EPC page is valid.

64-Bit Mode Exceptions

#GP(0)	If a memory operand is non-canonical form.
	If a memory operand is not properly aligned.
	If another Intel SGX instruction is accessing the EPC page.
	If RBX is not set to PT_VA.
#PF(error code)	If a page fault occurs in accessing memory operands.
	If a memory operand is not an EPC page.
	If the EPC page is valid.

ERDINFO—Read Type and Status Information About an EPC Page

Opcode/ Instruction	Op/En	64/32 bit Mode Support	CPUID Feature Flag	Description
EAX = 10H ENCLS[ERDINFO]	IR	V/V	EAX[6]	This leaf function returns type and status information about an EPC page.

Instruction Operand Encoding

Op/En	EAX		RBX	RCX
IR	ERDINFO (In)	Return error code (Out)	Address of a RDINFO structure (In)	Address of the destination EPC page (In)

Description

This instruction reads type and status information about an EPC page and returns it in a RDINFO structure. The STATUS field of the structure describes the status of the page and determines the validity of the remaining fields. The FLAGS field returns the EPCM permissions of the page; the page type; and the BLOCKED, PENDING, MODIFIED, and PR status of the page. For enclave pages, the ENCLAVECONTEXT field of the structure returns the value of SECS.ENCLAVECONTEXT. For non-enclave pages (e.g., VA) ENCLAVECONTEXT returns 0.

For invalid or non-EPC pages, the instruction returns an information code indicating the page's status, in addition to populating the STATUS field.

ERDINFO returns an error code if the destination EPC page is being modified by a concurrent SGX instruction.

RBX contains the effective address of a RDINFO structure while RCX contains the effective address of an EPC page. The table below provides additional information on the memory parameter of ERDINFO leaf function.

ERDINFO Memory Parameter Semantics

RDINFO	EPCPAGE
Read/Write access permitted by Non Enclave	Read access permitted by Enclave

The instruction faults if any of the following:

ERDINFO Faulting Conditions

A memory operand effective address is outside the DS segment limit (32b mode).	A memory operand is not properly aligned.
DS segment is unusable (32b mode).	A page fault occurs in accessing memory operands.
A memory address is in a non-canonical form (64b mode).	

The error codes are:

Table 38-39. ERDINFO Return Value in RAX

Error Code	Value	Description
No Error	0	ERDINFO successful.
SGX_EPC_PAGE_CONFLICT		Failure due to concurrent operation of another SGX instruction.
SGX_PG_INVLD		Target page is not a valid EPC page.
SGX_PG_NONEPC		Page is not an EPC page.

Concurrency Restrictions

Table 38-40. Base Concurrency Restrictions of ERDINFO

Leaf	Parameter	Base Concurrency Restrictions		
		Access	On Conflict	SGX_CONFLICT VM Exit Qualification
ERDINFO	Target [DS:RCX]	Shared	SGX_EPC_PAGE_CONFLICT	

Table 38-41. Additional Concurrency Restrictions of ERDINFO

Leaf	Parameter	Additional Concurrency Restrictions					
		vs. EACCEPT, EACCEPTCOPY, EMODPE, EMODPR, EMODT		vs. EADD, EEXTEND, EINIT		vs. ETRACK, ETRACKC	
		Access	On Conflict	Access	On Conflict	Access	On Conflict
ERDINFO	Target [DS:RCX]	Concurrent		Concurrent		Concurrent	

Operation

Temp Variables in ERDINFO Operational Flow

Name	Type	Size (Bits)	Description
TMP_SECS	Physical Address	64	Physical address of the SECS of the page being modified.
TMP_RDINFO	Linear Address	64	Address of the RDINFO structure.

```
(* check alignment of RDINFO structure (RBX) *)
IF (DS:RBX is not 32Byte Aligned) THEN
   #GP(0); FI;

(* check alignment of the EPCPAGE (RCX) *)
IF (DS:RCX is not 4KByte Aligned) THEN
   #GP(0); FI;

(* check that EPCPAGE (DS:RCX) is the address of an EPC page *)
IF (DS:RCX does not resolve within EPC) THEN
   RFLAGS.CF := 1;
   RFLAGS.ZF := 0;
   RAX := SGX_PG_NONEPC;
   goto DONE;
FI;

(* Check the EPC page for concurrency *)
IF (EPC page is being modified) THEN
   RFLAGS.ZF = 1;
   RFLAGS.CF = 0;
   RAX = SGX_EPC_PAGE_CONFLICT;
   goto DONE;
FI;

(* check page validity *)
IF (EPCM(DS:RCX).VALID = 0) THEN
   RFLAGS.CF = 1;
```

```
    RFLAGS.ZF = 0;
    RAX = SGX_PG_INVLD;
    goto DONE;
FI;

(* clear the fields of the RDINFO structure *)
TMP_RDINFO := DS:RBX;
TMP_RDINFO.STATUS := 0;
TMP_RDINFO.FLAGS := 0;
TMP_RDINFO.ENCLAVECONTEXT := 0;

(* store page info in RDINFO structure *)
TMP_RDINFO.FLAGS.RWX := EPCM(DS:RCX).RWX;
TMP_RDINFO.FLAGS.PENDING := EPCM(DS:RCX).PENDING;
TMP_RDINFO.FLAGS.MODIFIED := EPCM(DS:RCX).MODIFIED;
TMP_RDINFO.FLAGS.PR := EPCM(DS:RCX).PR;
TMP_RDINFO.FLAGS.PAGE_TYPE := EPCM(DS:RCX).PAGE_TYPE;
TMP_RDINFO.FLAGS.BLOCKED := EPCM(DS:RCX).BLOCKED;

(* read SECS.ENCLAVECONTEXT for enclave child pages *)
IF ((EPCM(DS:RCX).PAGE_TYPE = PT_REG) or
    (EPCM(DS:RCX).PAGE_TYPE = PT_TCS) or
    (EPCM(DS:RCX).PAGE_TYPE = PT_TRIM) or
    (EPCM(DS:RCX).PAGE_TYPE = PT_SS_FIRST) or
    (EPCM(DS:RCX).PAGE_TYPE = PT_SS_REST)
   ) THEN
    TMP_SECS := Address of SECS for (DS:RCX);
    TMP_RDINFO.ENCLAVECONTEXT := SECS(TMP_SECS).ENCLAVECONTEXT;
FI;

(* populate enclave information for SECS pages *)
IF (EPCM(DS:RCX).PAGE_TYPE = PT_SECS) THEN
    IF ((VMX non-root mode) and
        (ENABLE_EPC_VIRTUALIZATION_EXTENSIONS Execution Control = 1)
       ) THEN
        TMP_RDINFO.STATUS.CHILDPRESENT :=
                        ((SECS(DS:RCX).CHLDCNT ≠ 0) or
                          SECS(DS:RCX).VIRTCHILDCNT ≠ 0);
    ELSE
        TMP_RDINFO.STATUS.CHILDPRESENT := (SECS(DS:RCX).CHLDCNT ≠ 0);
        TMP_RDINFO.STATUS.VIRTCHILDPRESENT :=
                        (SECS(DS:RCX).VIRTCHILDCNT ≠ 0);
        TMP_RDINFO.ENCLAVECONTEXT := SECS(DS_RCX).ENCLAVECONTEXT;
    FI;
FI;

RAX := 0;
RFLAGS.ZF := 0;
RFLAGS.CF := 0;

DONE:
(* clear flags *)
RFLAGS.PF := 0;
RFLAGS.AF := 0;
```

```
RFLAGS.OF := 0;
RFLAGS.SF := ? 0;
```

Flags Affected

ZF is set if ERDINFO fails due to concurrent operation with another SGX instruction; otherwise cleared.

CF is set if page is not a valid EPC page or not an EPC page; otherwise cleared.

PF, AF, OF, and SF are cleared.

Protected Mode Exceptions

#GP(0)	If a memory operand effective address is outside the DS segment limit.
	If DS segment is unusable.
	If a memory operand is not properly aligned.
#PF(error code)	If a page fault occurs in accessing memory operands.

64-Bit Mode Exceptions

#GP(0)	If the memory address is in a non-canonical form.
	If a memory operand is not properly aligned.
#PF(error code)	If a page fault occurs in accessing memory operands.

EREMOVE—Remove a page from the EPC

Opcode/ Instruction	Op/En	64/32 bit Mode Support	CPUID Feature Flag	Description
EAX = 03H ENCLS[EREMOVE]	IR	V/V	SGX1	This leaf function removes a page from the EPC.

Instruction Operand Encoding

Op/En	EAX		RCX
IR	EREMOVE (In)	Return error code (Out)	Effective address of the EPC page (In)

Description

This leaf function causes an EPC page to be un-associated with its SECS and be marked as unused. This instruction leaf can only be executed when the current privilege level is 0.

The content of RCX is an effective address of an EPC page. The DS segment is used to create linear address. Segment override is not supported.

The instruction fails if the operand is not properly aligned or does not refer to an EPC page or the page is in use by another thread, or other threads are running in the enclave to which the page belongs. In addition the instruction fails if the operand refers to an SECS with associations.

EREMOVE Memory Parameter Semantics

EPCPAGE
Write access permitted by Enclave

The instruction faults if any of the following:

EREMOVE Faulting Conditions

The memory operand is not properly aligned.	The memory operand does not resolve in an EPC page.
Refers to an invalid SECS.	Refers to an EPC page that is locked by another thread.
Another Intel SGX instruction is accessing the EPC page.	RCX does not contain an effective address of an EPC page.
the EPC page refers to an SECS with associations.	

The error codes are:

Table 38-42. EREMOVE Return Value in RAX

Error Code (see Table 38-4)	Description
No Error	EREMOVE successful.
SGX_CHILD_PRESENT	If the SECS still have enclave pages loaded into EPC.
SGX_ENCLAVE_ACT	If there are still logical processors executing inside the enclave.

Concurrency Restrictions

Table 38-43. Base Concurrency Restrictions of EREMOVE

Leaf	Parameter	Base Concurrency Restrictions		
		Access	On Conflict	SGX_CONFLICT VM Exit Qualification
EREMOVE	Target [DS:RCX]	Exclusive	#GP	EPC_PAGE_CONFLICT_EXCEPTION

Table 38-44. Additional Concurrency Restrictions of EREMOVE

Leaf	Parameter	Additional Concurrency Restrictions					
		vs. EACCEPT, EACCEPTCOPY, EMODPE, EMODPR, EMODT		vs. EADD, EEXTEND, EINIT		vs. ETRACK, ETRACKC	
		Access	On Conflict	Access	On Conflict	Access	On Conflict
EREMOVE	Target [DS:RCX]	Concurrent		Concurrent		Concurrent	

Operation

Temp Variables in EREMOVE Operational Flow

Name	Type	Size (Bits)	Description
TMP_SECS	Effective Address	32/64	Effective address of the SECS destination page.

```
IF (DS:RCX is not 4KByte Aligned)
    THEN #GP(0); FI;

IF (DS:RCX does not resolve to an EPC page)
    THEN #PF(DS:RCX); FI;

TMP_SECS := Get_SECS_ADDRESS();

(* Check the EPC page for concurrency *)
IF (EPC page being referenced by another Intel SGX instruction)
    THEN
        IF (<<VMX non-root operation>> AND <<ENABLE_EPC_VIRTUALIZATION_EXTENSIONS>>)
            THEN
                VMCS.Exit_reason := SGX_CONFLICT;
                VMCS.Exit_qualification.code := EPC_PAGE_CONFLICT_EXCEPTION;
                VMCS.Exit_qualification.error := 0;
                VMCS.Guest-physical_address := << translation of DS:RCX produced by paging >>;
                VMCS.Guest-linear_address := DS:RCX;
            Deliver VMEXIT;
            ELSE
                #GP(0);
        FI;
FI;

(* if DS:RCX is already unused, nothing to do*)
IF ( (EPCM(DS:RCX).VALID = 0) or (EPCM(DS:RCX).PT = PT_TRIM AND EPCM(DS:RCX).MODIFIED = 0))
    THEN GOTO DONE;
FI;
```

```
IF ( (EPCM(DS:RCX).PT = PT_VA) OR
     ((EPCM(DS:RCX).PT = PT_TRIM) AND (EPCM(DS:RCX).MODIFIED = 0)) )
     THEN
          EPCM(DS:RCX).VALID := 0;
          GOTO DONE;
FI;

IF (EPCM(DS:RCX).PT = PT_SECS)
     THEN
          IF (DS:RCX has an EPC page associated with it)
               THEN
                    RFLAGS.ZF := 1;
                    RAX := SGX_CHILD_PRESENT;
                    GOTO ERROR_EXIT;
          FI;
          (* treat SECS as having a child page when VIRTCHILDCNT is non-zero *)
          IF (<<in VMX non-root operation>> AND
         <<ENABLE_EPC_VIRTUALIZATION_EXTENSIONS>> AND
         (SECS(DS:RCX).VIRTCHILDCNT ≠ 0))
               THEN
                    RFLAGS.ZF := 1;
                    RAX := SGX_CHILD_PRESENT
                    GOTO ERROR_EXIT
          FI;
          EPCM(DS:RCX).VALID := 0;
          GOTO DONE;
FI;

IF (Other threads active using SECS)
     THEN
          RFLAGS.ZF := 1;
          RAX := SGX_ENCLAVE_ACT;
          GOTO ERROR_EXIT;
FI;

IF ( (EPCM(DS:RCX).PT is PT_REG) or (EPCM(DS:RCX).PT is PT_TCS) or (EPCM(DS:RCX).PT is PT_TRIM) or
 (EPCM(DS:RCX).PT is PT_SS_FIRST) or (EPCM(DS:RCX).PT is PT_SS_REST))
     THEN
          EPCM(DS:RCX).VALID := 0;
          GOTO DONE;
FI;

DONE:
RAX := 0;
RFLAGS.ZF := 0;

ERROR_EXIT:
RFLAGS.CF,PF,AF,OF,SF := 0;
```

Flags Affected

Sets ZF if unsuccessful, otherwise cleared and RAX returns error code. Clears CF, PF, AF, OF, SF.

Protected Mode Exceptions

#GP(0)	If a memory operand effective address is outside the DS segment limit.
	If a memory operand is not properly aligned.
	If another Intel SGX instruction is accessing the page.
#PF(error code)	If a page fault occurs in accessing memory operands.
	If the memory operand is not an EPC page.

64-Bit Mode Exceptions

#GP(0)	If the memory operand is non-canonical form.
	If a memory operand is not properly aligned.
	If another Intel SGX instruction is accessing the page.
#PF(error code)	If a page fault occurs in accessing memory operands.
	If the memory operand is not an EPC page.

ETRACK—Activates EBLOCK Checks

Opcode/ Instruction	Op/En	64/32 bit Mode Support	CPUID Feature Flag	Description
EAX = 0CH ENCLS[ETRACK]	IR	V/V	SGX1	This leaf function activates EBLOCK checks.

Instruction Operand Encoding

Op/En	EAX		RCX
IR	ETRACK (In)	Return error code (Out)	Pointer to the SECS of the EPC page (In)

Description

This leaf function provides the mechanism for hardware to track that software has completed the required TLB address clears successfully. The instruction can only be executed when the current privilege level is 0.

The content of RCX is an effective address of an EPC page.

The table below provides additional information on the memory parameter of ETRACK leaf function.

ETRACK Memory Parameter Semantics

EPCPAGE
Read/Write access permitted by Enclave

The error codes are:

Table 38-45. ETRACK Return Value in RAX

Error Code (see Table 38-4)	Description
No Error	ETRACK successful.
SGX_PREV_TRK_INCMPL	All processors did not complete the previous shoot-down sequence.

Concurrency Restrictions

Table 38-46. Base Concurrency Restrictions of ETRACK

Leaf	Parameter	Base Concurrency Restrictions		
		Access	On Conflict	SGX_CONFLICT VM Exit Qualification
ETRACK	SECS [DS:RCX]	Shared	#GP	

Table 38-47. Additional Concurrency Restrictions of ETRACK

Leaf	Parameter	Additional Concurrency Restrictions					
		vs. EACCEPT, EACCEPTCOPY, EMODPE, EMODPR, EMODT		vs. EADD, EEXTEND, EINIT		vs. ETRACK, ETRACKC	
		Access	On Conflict	Access	On Conflict	Access	On Conflict
ETRACK	SECS [DS:RCX]	Concurrent		Concurrent		Exclusive	SGX_EPC_PAGE _CONFLICT

Operation

```
IF (DS:RCX is not 4KByte Aligned)
    THEN #GP(0); FI;

IF (DS:RCX does not resolve within an EPC)
    THEN #PF(DS:RCX); FI;

(* Check concurrency with other Intel SGX instructions *)
IF (Other Intel SGX instructions using tracking facility on this SECS)
    THEN
        IF (<<VMX non-root operation>> AND <<ENABLE_EPC_VIRTUALIZATION_EXTENSIONS>>)
            THEN
                VMCS.Exit_reason := SGX_CONFLICT;
                VMCS.Exit_qualification.code := TRACKING_RESOURCE_CONFLICT;
                VMCS.Exit_qualification.error := 0;
                VMCS.Guest-physical_address := SECS(TMP_SECS).ENCLAVECONTEXT;
                VMCS.Guest-linear_address := 0;
            Deliver VMEXIT;
            ELSE
                #GP(0);
        FI;
FI;

IF (EPCM(DS:RCX). VALID = 0)
    THEN #PF(DS:RCX); FI;

IF (EPCM(DS:RCX).PT ≠ PT_SECS)
    THEN #PF(DS:RCX); FI;

(* All processors must have completed the previous tracking cycle*)
IF ( (DS:RCX).TRACKING ≠ 0) )
    THEN
        IF (<<VMX non-root operation>> AND <<ENABLE_EPC_VIRTUALIZATION_EXTENSIONS>>)
            THEN
                VMCS.Exit_reason := SGX_CONFLICT;
                VMCS.Exit_qualification.code := TRACKING_REFERENCE_CONFLICT;
                VMCS.Exit_qualification.error := 0;
                VMCS.Guest-physical_address := SECS(TMP_SECS).ENCLAVECONTEXT;
                VMCS.Guest-linear_address := 0;
            Deliver VMEXIT;
        FI;
    RFLAGS.ZF := 1;
        RAX := SGX_PREV_TRK_INCMPL;
        GOTO DONE;
    ELSE
        RAX := 0;
        RFLAGS.ZF := 0;
FI;

DONE:
RFLAGS.CF,PF,AF,OF,SF := 0;
```

Flags Affected

Sets ZF if SECS is in use or invalid, otherwise cleared. Clears CF, PF, AF, OF, SF.

Protected Mode Exceptions

#GP(0)	If a memory operand effective address is outside the DS segment limit.
	If a memory operand is not properly aligned.
	If another thread is concurrently using the tracking facility on this SECS.
#PF(error code)	If a page fault occurs in accessing memory operands.
	If a memory operand is not an EPC page.

64-Bit Mode Exceptions

#GP(0)	If a memory operand is non-canonical form.
	If a memory operand is not properly aligned.
	If the specified EPC resource is in use.
#PF(error code)	If a page fault occurs in accessing memory operands.
	If a memory operand is not an EPC page.

ETRACKC—Activates EBLOCK Checks

Opcode/ Instruction	Op/En	64/32 bit Mode Support	CPUID Feature Flag	Description
EAX = 11H ENCLS[ETRACKC]	IR	V/V	EAX[6]	This leaf function activates EBLOCK checks.

Instruction Operand Encoding

Op/En	EAX		RCX	
IR	ETRACK (In)	Return error code (Out)	Address of the destination EPC page (In, EA)	Address of the SECS page (In, EA)

Description

The ETRACKC instruction is thread safe variant of ETRACK leaf and can be executed concurrently with other CPU threads operating on the same SECS.

This leaf function provides the mechanism for hardware to track that software has completed the required TLB address clears successfully. The instruction can only be executed when the current privilege level is 0.

The content of RCX is an effective address of an EPC page.

The table below provides additional information on the memory parameter of ETRACK leaf function.

ETRACKC Memory Parameter Semantics

EPCPAGE
Read/Write access permitted by Enclave

The error codes are:

Table 38-48. ETRACKC Return Value in RAX

Error Code	Value	Description
No Error	0	ETRACKC successful.
SGX_EPC_PAGE_CONFLICT	7	Failure due to concurrent operation of another SGX instruction.
SGX_PG_INVLD	6	Target page is not a VALID EPC page.
SGX_PREV_TRK_INCMPL	17	All processors did not complete the previous tracking sequence.
SGX_TRACK_NOT_REQUIRED	27	Target page type does not require tracking.

Concurrency Restrictions

Table 38-49. Base Concurrency Restrictions of ETRACKC

Leaf	Parameter	Base Concurrency Restrictions		
		Access	On Conflict	SGX_CONFLICT VM Exit Qualification
ETRACKC	Target [DS:RCX]	Shared	SGX_EPC_PAGE_ CONFLICT	
	SECS implicit	Concurrent		

Table 38-50. Additional Concurrency Restrictions of ETRACKC

Leaf	Parameter	Additional Concurrency Restrictions					
		vs. EACCEPT, EACCEPTCOPY, EMODPE, EMODPR, EMODT		vs. EADD, EEXTEND, EINIT		vs. ETRACK, ETRACKC	
		Access	On Conflict	Access	On Conflict	Access	On Conflict
ETRACKC	Target [DS:RCX]	Concurrent		Concurrent		Concurrent	
	SECS implicit	Concurrent		Concurrent		Exclusive	SGX_EPC_PAGE_CONFLICT

Operation

Temp Variables in ETRACKC Operational Flow

Name	Type	Size (Bits)	Description
TMP_SECS	Physical Address	64	Physical address of the SECS of the page being modified.

```
(* check alignment of EPCPAGE (RCX) *)
IF (DS:RCX is not 4KByte Aligned) THEN
#GP(0); FI;

(* check that EPCPAGE (DS:RCX) is the address of an EPC page *)
IF (DS:RCX does not resolve within an EPC) THEN
#PF(DS:RCX, PFEC.SGX); FI;

(* Check the EPC page for concurrency *)
IF (EPC page is being modified) THEN
   RFLAGS.ZF := 1;
   RFLAGS.CF := 0;
   RAX := SGX_EPC_PAGE_CONFLICT;
   goto DONE_POST_LOCK_RELEASE;
FI;

(* check to make sure the page is valid *)
IF (EPCM(DS:RCX).VALID = 0) THEN
   RFLAGS.ZF := 1;
   RFLAGS.CF := 0;
   RAX := SGX_PG_INVLD;
   GOTO DONE;
FI;

(* find out the target SECS page *)
IF (EPCM(DS:RCX).PT is PT_REG or PT_TCS or PT_TRIM or PT_SS_FIRST or PT_SS_REST) THEN
   TMP_SECS := Obtain SECS through EPCM(DS:RCX).ENCLAVESECS;
ELSE IF (EPCM(DS:RCX).PT is PT_SECS) THEN
   TMP_SECS := Obtain SECS through (DS:RCX);
ELSE
   RFLAGS.ZF := 0;
   RFLAGS.CF := 1;
   RAX := SGX_TRACK_NOT_REQUIRED;
   GOTO DONE;
FI;
```

```
(* Check concurrency with other Intel SGX instructions *)
IF (Other Intel SGX instructions using tracking facility on this SECS) THEN
    IF ((VMX non-root mode) and
    (ENABLE_EPC_VIRTUALIZATION_EXTENSIONS Execution Control = 1)) THEN
        VMCS.Exit_reason := SGX_CONFLICT;
        VMCS.Exit_qualification.code := TRACKING_RESOURCE_CONFLICT;
        VMCS.Exit_qualification.error := 0;
        VMCS.Guest-physical_address :=
            SECS(TMP_SECS).ENCLAVECONTEXT;
        VMCS.Guest-linear_address := 0;
        Deliver VMEXIT;
    FI;

  RFLAGS.ZF := 1;
  RFLAGS.CF := 0;
  RAX := SGX_EPC_PAGE_CONFLICT;
  GOTO DONE;
FI;
(* All processors must have completed the previous tracking cycle*)
IF ( (TMP_SECS).TRACKING ≠ 0) )
THEN
    IF ((VMX non-root mode) and
    (ENABLE_EPC_VIRTUALIZATION_EXTENSIONS Execution Control = 1)) THEN
        VMCS.Exit_reason := SGX_CONFLICT;
        VMCS.Exit_qualification.code := TRACKING_REFERENCE_CONFLICT;
        VMCS.Exit_qualification.error := 0;
        VMCS.Guest-physical_address :=
            SECS(TMP_SECS).ENCLAVECONTEXT;
        VMCS.Guest-linear_address := 0;
        Deliver VMEXIT;
    FI;

  RFLAGS.ZF := 1;
  RFLAGS.CF := 0;
  RAX := SGX_PREV_TRK_INCMPL;
  GOTO DONE;
FI;

RFLAGS.ZF := 0;
RFLAGS.CF := 0;
RAX := 0;

DONE:
(* clear flags *)
RFLAGS.PF,AF,OF,SF := 0;
```

Flags Affected

ZF is set if ETRACKC fails due to concurrent operations with another SGX instructions or target page is an invalid EPC page or tracking is not completed on SECS page; otherwise cleared.

CF is set if target page is not of a type that requires tracking; otherwise cleared.

PF, AF, OF, and SF are cleared.

Protected Mode Exceptions

#GP(0)	If the memory operand violates access-control policies of DS segment. If DS segment is unusable. If the memory operand is not properly aligned.
#PF(error code)	If the memory operand expected to be in EPC does not resolve to an EPC page. If a page fault occurs in access memory operand.

64-Bit Mode Exceptions

#GP(0)	If a memory address is in a non-canonical form. If a memory operand is not properly aligned.
#PF(error code)	If the memory operand expected to be in EPC does not resolve to an EPC page. If a page fault occurs in access memory operand.

EWB—Invalidate an EPC Page and Write out to Main Memory

Opcode/ Instruction	Op/En	64/32 bit Mode Support	CPUID Feature Flag	Description
EAX = 0BH ENCLS[EWB]	IR	V/V	SGX1	This leaf function invalidates an EPC page and writes it out to main memory.

Instruction Operand Encoding

Op/En	EAX		RBX	RCX	RDX
IR	EWB (In)	Error code (Out)	Address of an PAGEINFO (In)	Address of the EPC page (In)	Address of a VA slot (In)

Description

This leaf function copies a page from the EPC to regular main memory. As part of the copying process, the page is cryptographically protected. This instruction can only be executed when current privilege level is 0.

The table below provides additional information on the memory parameter of EPA leaf function.

EWB Memory Parameter Semantics

PAGEINFO	PAGEINFO.SRCPGE	PAGEINFO.PCMD	EPCPAGE	VASLOT
Non-EPC R/W access	Non-EPC R/W access	Non-EPC R/W access	EPC R/W access	EPC R/W access

The error codes are:

Table 38-51. EWB Return Value in RAX

Error Code (see Table 38-4)	Description
No Error	EWB successful.
SGX_PAGE_NOT_BLOCKED	If page is not marked as blocked.
SGX_NOT_TRACKED	If EWB is racing with ETRACK instruction.
SGX_VA_SLOT_OCCUPIED	Version array slot contained valid entry.
SGX_CHILD_PRESENT	Child page present while attempting to page out enclave.

Concurrency Restrictions

Table 38-52. Base Concurrency Restrictions of EWB

Leaf	Parameter	Base Concurrency Restrictions		
		Access	On Conflict	SGX_CONFLICT VM Exit Qualification
EWB	Source [DS:RCX]	Exclusive	#GP	EPC_PAGE_CONFLICT_EXCEPTION
	VA [DS:RDX]	Shared	#GP	

Table 38-53. Additional Concurrency Restrictions of EWB

Leaf	Parameter	Additional Concurrency Restrictions					
		vs. EACCEPT, EACCEPTCOPY, EMODPE, EMODPR, EMODT		vs. EADD, EEXTEND, EINIT		vs. ETRACK, ETRACKC	
		Access	On Conflict	Access	On Conflict	Access	On Conflict
EWB	Source [DS:RCX]	Concurrent		Concurrent		Concurrent	
	VA [DS:RDX]	Concurrent		Concurrent		Exclusive	

Operation

Temp Variables in EWB Operational Flow

Name	Type	Size (Bytes)	Description
TMP_SRCPGE	Memory page	4096	
TMP_PCMD	PCMD	128	
TMP_SECS	SECS	4096	
TMP_BPEPOCH	UINT64	8	
TMP_BPREFCOUNT	UINT64	8	
TMP_HEADER	MAC Header	128	
TMP_PCMD_ENCLAVEID	UINT64	8	
TMP_VER	UINT64	8	
TMP_PK	UINT128	16	

```
IF ( (DS:RBX is not 32Byte Aligned) or (DS:RCX is not 4KByte Aligned) )
    THEN #GP(0); FI;

IF (DS:RCX does not resolve within an EPC)
    THEN #PF(DS:RCX); FI;

IF (DS:RDX is not 8Byte Aligned)
    THEN #GP(0); FI;

IF (DS:RDX does not resolve within an EPC)
    THEN #PF(DS:RDX); FI;

(* EPCPAGE and VASLOT should not resolve to the same EPC page*)
IF (DS:RCX and DS:RDX resolve to the same EPC page)
    THEN #GP(0); FI;

TMP_SRCPGE := DS:RBX.SRCPGE;
(* Note PAGEINFO.PCMD is overlaid on top of PAGEINFO.SECINFO *)
TMP_PCMD := DS:RBX.PCMD;

If (DS:RBX.LINADDR ≠ 0) OR (DS:RBX.SECS ≠ 0)
    THEN #GP(0); FI;

IF ( (DS:TMP_PCMD is not 128Byte Aligned) or (DS:TMP_SRCPGE is not 4KByte Aligned) )
    THEN #GP(0); FI;

(* Check for concurrent Intel SGX instruction access to the page *)
IF (Other Intel SGX instruction is accessing page)
    THEN
        IF (<<VMX non-root operation>> AND <<ENABLE_EPC_VIRTUALIZATION_EXTENSIONS>>)
            THEN
                VMCS.Exit_reason := SGX_CONFLICT;
                VMCS.Exit_qualification.code := EPC_PAGE_CONFLICT_EXCEPTION;
                VMCS.Exit_qualification.error := 0;
                VMCS.Guest-physical_address := << translation of DS:RCX produced by paging >>;
```

```
                VMCS.Guest-linear_address := DS:RCX;
            Deliver VMEXIT;
            ELSE
                #GP(0);
        FI;
FI;

(*Check if the VA Page is being removed or changed*)
IF (VA Page is being modified)
    THEN #GP(0); FI;

(* Verify that EPCPAGE and VASLOT page are valid EPC pages and DS:RDX is VA *)
IF (EPCM(DS:RCX).VALID = 0)
    THEN #PF(DS:RCX); FI;

IF ( (EPCM(DS:RDX & ~0FFFH).VALID = 0) or (EPCM(DS:RDX & ~FFFH).PT is not PT_VA) )
    THEN #PF(DS:RDX); FI;

(* Perform page-type-specific exception checks *)
IF ( (EPCM(DS:RCX).PT is PT_REG) or (EPCM(DS:RCX).PT is PT_TCS) or (EPCM(DS:RCX).PT is PT_TRIM ) or
 (EPCM(DS:RCX).PT is PT_SS_FIRST ) or (EPCM(DS:RCX).PT is PT_SS_REST))
    THEN
        TMP_SECS = Obtain SECS through EPCM(DS:RCX)
    (* Check that EBLOCK has occurred correctly *)
    IF (EBLOCK is not correct)
        THEN #GP(0); FI;
FI;

RFLAGS.ZF,CF,PF,AF,OF,SF := 0;
RAX := 0;

(* Zero out TMP_HEADER*)
TMP_HEADER[ sizeof(TMP_HEADER) - 1 : 0] := 0;

(* Perform page-type-specific checks *)
IF ( (EPCM(DS:RCX).PT is PT_REG) or (EPCM(DS:RCX).PT is PT_TCS) or (EPCM(DS:RCX).PT is PT_TRIM )or
 (EPCM(DS:RCX).PT is PT_SS_FIRST ) or (EPCM(DS:RCX).PT is PT_SS_REST))
    THEN
        (* check to see if the page is evictable *)
        IF (EPCM(DS:RCX).BLOCKED = 0)
            THEN
                RAX := SGX_PAGE NOT_BLOCKED;
                RFLAGS.ZF := 1;
                GOTO ERROR_EXIT;
        FI;
        (* Check if tracking done correctly *)
        IF (Tracking not correct)
            THEN
                RAX := SGX_NOT_TRACKED;
                RFLAGS.ZF := 1;
                GOTO ERROR_EXIT;
        FI;

        (* Obtain EID to establish cryptographic binding between the paged-out page and the enclave *)
```

```
        TMP_HEADER.EID := TMP_SECS.EID;

        (* Obtain EID as an enclave handle for software *)
        TMP_PCMD_ENCLAVEID := TMP_SECS.EID;
    ELSE IF (EPCM(DS:RCX).PT is PT_SECS)
        (*check that there are no child pages inside the enclave *)
        IF (DS:RCX has an EPC page associated with it)
            THEN
                RAX := SGX_CHILD_PRESENT;
                RFLAGS.ZF := 1;
                GOTO ERROR_EXIT;
        FI:
        (* treat SECS as having a child page when VIRTCHILDCNT is non-zero *)
        IF (<<in VMX non-root operation>> AND
     <<ENABLE_EPC_VIRTUALIZATION_EXTENSIONS>> AND
     (SECS(DS:RCX).VIRTCHILDCNT ≠ 0))
            THEN
                RFLAGS.ZF := 1;
                RAX := SGX_CHILD_PRESENT;
                GOTO ERROR_EXIT;
        FI;
        TMP_HEADER.EID := 0;
        (* Obtain EID as an enclave handle for software *)
        TMP_PCMD_ENCLAVEID := (DS:RCX).EID;
    ELSE IF (EPCM(DS:RCX).PT is PT_VA)
        TMP_HEADER.EID := 0; // Zero is not a special value
        (* No enclave handle for VA pages*)
        TMP_PCMD_ENCLAVEID := 0;
FI;

TMP_HEADER.LINADDR := EPCM(DS:RCX).ENCLAVEADDRESS;
TMP_HEADER.SECINFO.FLAGS.PT := EPCM(DS:RCX).PT;
TMP_HEADER.SECINFO.FLAGS.RWX := EPCM(DS:RCX).RWX;
TMP_HEADER.SECINFO.FLAGS.PENDING := EPCM(DS:RCX).PENDING;
TMP_HEADER.SECINFO.FLAGS.MODIFIED := EPCM(DS:RCX).MODIFIED;
TMP_HEADER.SECINFO.FLAGS.PR := EPCM(DS:RCX).PR;

(* Encrypt the page, DS:RCX could be encrypted in place. AES-GCM produces 2 values, {ciphertext, MAC}. *)
(* AES-GCM input parameters: key, GCM Counter, MAC_HDR, MAC_HDR_SIZE, SRC, SRC_SIZE)*)
{DS:TMP_SRCPGE, DS:TMP_PCMD.MAC} := AES_GCM_ENC(CR_BASE_PK), (TMP_VER << 32),
    TMP_HEADER, 128, DS:RCX, 4096);

(* Write the output *)
Zero out DS:TMP_PCMD.SECINFO
DS:TMP_PCMD.SECINFO.FLAGS.PT := EPCM(DS:RCX).PT;
DS:TMP_PCMD.SECINFO.FLAGS.RWX := EPCM(DS:RCX).RWX;
DS:TMP_PCMD.SECINFO.FLAGS.PENDING := EPCM(DS:RCX).PENDING;
DS:TMP_PCMD.SECINFO.FLAGS.MODIFIED := EPCM(DS:RCX).MODIFIED;
DS:TMP_PCMD.SECINFO.FLAGS.PR := EPCM(DS:RCX).PR;
DS:TMP_PCMD.RESERVED := 0;
DS:TMP_PCMD.ENCLAVEID := TMP_PCMD_ENCLAVEID;
DS:RBX.LINADDR := EPCM(DS:RCX).ENCLAVEADDRESS;

(*Check if version array slot was empty *)
```

```
IF ([DS.RDX])
    THEN
        RAX := SGX_VA_SLOT_OCCUPIED
        RFLAGS.CF := 1;
FI;

(* Write version to Version Array slot *)
[DS.RDX] := TMP_VER;

(* Free up EPCM Entry *)
EPCM.(DS:RCX).VALID := 0;
ERROR_EXIT:
```

Flags Affected

ZF is set if page is not blocked, not tracked, or a child is present. Otherwise cleared.

CF is set if VA slot is previously occupied, Otherwise cleared.

Protected Mode Exceptions

#GP(0)	If a memory operand effective address is outside the DS segment limit.
	If a memory operand is not properly aligned.
	If the EPC page and VASLOT resolve to the same EPC page.
	If another Intel SGX instruction is concurrently accessing either the target EPC, VA, or SECS pages.
	If the tracking resource is in use.
	If the EPC page or the version array page is invalid.
	If the parameters fail consistency checks.
#PF(error code)	If a page fault occurs in accessing memory operands.
	If a memory operand is not an EPC page.
	If one of the EPC memory operands has incorrect page type.

64-Bit Mode Exceptions

#GP(0)	If a memory operand is non-canonical form.
	If a memory operand is not properly aligned.
	If the EPC page and VASLOT resolve to the same EPC page.
	If another Intel SGX instruction is concurrently accessing either the target EPC, VA, or SECS pages.
	If the tracking resource is in use.
	If the EPC page or the version array page in invalid.
	If the parameters fail consistency checks.
#PF(error code)	If a page fault occurs in accessing memory operands.
	If a memory operand is not an EPC page.
	If one of the EPC memory operands has incorrect page type.

38.4 INTEL® SGX USER LEAF FUNCTION REFERENCE

Leaf functions available with the ENCLU instruction mnemonic are covered in this section. In general, each instruction leaf requires EAX to specify the leaf function index and/or additional registers specifying leaf-specific input parameters. An instruction operand encoding table provides details of the implicitly-encoded register usage and associated input/output semantics.

In many cases, an input parameter specifies an effective address associated with a memory object inside or outside the EPC, the memory addressing semantics of these memory objects are also summarized in a separate table.

EACCEPT—Accept Changes to an EPC Page

Opcode/ Instruction	Op/En	64/32 bit Mode Support	CPUID Feature Flag	Description
EAX = 05H ENCLU[EACCEPT]	IR	V/V	SGX2	This leaf function accepts changes made by system software to an EPC page in the running enclave.

Instruction Operand Encoding

Op/En	EAX		RBX	RCX
IR	EACCEPT (In)	Return Error Code (Out)	Address of a SECINFO (In)	Address of the destination EPC page (In)

Description

This leaf function accepts changes to a page in the running enclave by verifying that the security attributes specified in the SECINFO match the security attributes of the page in the EPCM. This instruction leaf can only be executed when inside the enclave.

RBX contains the effective address of a SECINFO structure while RCX contains the effective address of an EPC page. The table below provides additional information on the memory parameter of the EACCEPT leaf function.

EACCEPT Memory Parameter Semantics

SECINFO	EPCPAGE (Destination)
Read access permitted by Non Enclave	Read access permitted by Enclave

The instruction faults if any of the following:

EACCEPT Faulting Conditions

The operands are not properly aligned.	RBX does not contain an effective address in an EPC page in the running enclave.
The EPC page is locked by another thread.	RCX does not contain an effective address of an EPC page in the running enclave.
The EPC page is not valid.	Page type is PT_REG and MODIFIED bit is 0.
SECINFO contains an invalid request.	Page type is PT_TCS or PT_TRIM and PENDING bit is 0 and MODIFIED bit is 1.
If security attributes of the SECINFO page make the page inaccessible.	

The error codes are:

Table 38-54. EACCEPT Return Value in RAX

Error Code (see Table 38-4)	Description
No Error	EACCEPT successful.
SGX_PAGE_ATTRIBUTES_MISMATCH	The attributes of the target EPC page do not match the expected values.
SGX_NOT_TRACKED	The OS did not complete an ETRACK on the target page.

Concurrency Restrictions

Table 38-55. Base Concurrency Restrictions of EACCEPT

Leaf	Parameter	Base Concurrency Restrictions		
		Access	On Conflict	SGX_CONFLICT VM Exit Qualification
EACCEPT	Target [DS:RCX]	Shared	#GP	
	SECINFO [DS:RBX]	Concurrent		

Table 38-56. Additional Concurrency Restrictions of EACCEPT

Leaf	Parameter	Additional Concurrency Restrictions					
		vs. EACCEPT, EACCEPTCOPY, EMODPE, EMODPR, EMODT		vs. EADD, EEXTEND, EINIT		vs. ETRACK, ETRACKC	
		Access	On Conflict	Access	On Conflict	Access	On Conflict
EACCEPT	Target [DS:RCX]	Exclusive	#GP	Concurrent		Concurrent	
	SECINFO [DS:RBX]	Concurrent		Concurrent		Concurrent	

Operation

Temp Variables in EACCEPT Operational Flow

Name	Type	Size (bits)	Description
TMP_SECS	Effective Address	32/64	Physical address of SECS to which EPC operands belongs.
SCRATCH_SECINFO	SECINFO	512	Scratch storage for holding the contents of DS:RBX.

```
IF (DS:RBX is not 64Byte Aligned)
    THEN #GP(0); FI;

IF (DS:RBX is not within CR_ELRANGE)
    THEN #GP(0); FI;

IF (DS:RBX does not resolve within an EPC)
    THEN #PF(DS:RBX); FI;

IF ( (EPCM(DS:RBX &~FFFH).VALID = 0) or (EPCM(DS:RBX &~FFFH).R = 0) or (EPCM(DS:RBX &~FFFH).PENDING ≠ 0) or
    (EPCM(DS:RBX &~FFFH).MODIFIED ≠ 0) or (EPCM(DS:RBX &~FFFH).BLOCKED ≠ 0) or
    (EPCM(DS:RBX &~FFFH).PT ≠ PT_REG) or (EPCM(DS:RBX &~FFFH).ENCLAVESECS ≠ CR_ACTIVE_SECS) or
    (EPCM(DS:RBX &~FFFH).ENCLAVEADDRESS ≠ (DS:RBX & FFFH)) )
    THEN #PF(DS:RBX); FI;

(* Copy 64 bytes of contents *)
SCRATCH_SECINFO := DS:RBX;

(* Check for misconfigured SECINFO flags*)
IF (SCRATCH_SECINFO reserved fields are not zero )
    THEN #GP(0); FI;

IF (DS:RCX is not 4KByte Aligned)
    THEN #GP(0); FI;
```

```
IF (DS:RCX is not within CR_ELRANGE)
    THEN #GP(0); FI;

IF (DS:RCX does not resolve within an EPC)
    THEN #PF(DS:RCX); FI;

(* Check that the combination of requested PT, PENDING, and MODIFIED is legal *)
IF (CPUID.(EAX=12H, ECX=1):EAX[6] = 0 )
    THEN
        IF (NOT (((SCRATCH_SECINFO.FLAGS.PT is PT_REG) and
         ((SCRATCH_SECINFO.FLAGS.PR is 1) or
         (SCRATCH_SECINFO.FLAGS.PENDING is 1)) and
         (SCRATCH_SECINFO.FLAGS.MODIFIED is 0)) or
         ((SCRATCH_SECINFO.FLAGS.PT is PT_TCS or PT_TRIM) and
         (SCRATCH_SECINFO.FLAGS.PR is 0) and
         (SCRATCH_SECINFO.FLAGS.PENDING is 0) and
         (SCRATCH_SECINFO.FLAGS.MODIFIED is 1) )))
            THEN #GP(0); FI
    ELSE
        IF (NOT (((SCRATCH_SECINFO.FLAGS.PT is PT_REG) AND
         ((SCRATCH_SECINFO.FLAGS.PR is 1) OR
         (SCRATCH_SECINFO.FLAGS.PENDING is 1)) AND
         (SCRATCH_SECINFO.FLAGS.MODIFIED is 0)) OR
         ((SCRATCH_SECINFO.FLAGS.PT is PT_TCS OR PT_TRIM) AND
         (SCRATCH_SECINFO.FLAGS.PENDING is 0) AND
         (SCRATCH_SECINFO.FLAGS.MODIFIED is 1) AND
         (SCRATCH_SECINFO.FLAGS.PR is 0)) OR
         ((SCRATCH_SECINFO.FLAGS.PT is PT_SS_FIRST or PT_SS_REST) AND
         (SCRATCH_SECINFO.FLAGS.PENDING is 1) AND
         (SCRATCH_SECINFO.FLAGS.MODIFIED is 0) AND
         (SCRATCH_SECINFO.FLAGS.PR is 0))))
            THEN #GP(0); FI;
    FI;

(* Check security attributes of the destination EPC page *)
IF ( (EPCM(DS:RCX).VALID is 0) or (EPCM(DS:RCX).BLOCKED is not 0) or
  ((EPCM(DS:RCX).PT is not PT_REG) and (EPCM(DS:RCX).PT is not PT_TCS) and (EPCM(DS:RCX).PT is not PT_TRIM)
  and (EPCM(DS:RCX).PT is not PT_SS_FIRST) and (EPCM(DS:RCX).PT is not PT_SS_REST)) or
  (EPCM(DS:RCX).ENCLAVESECS ≠ CR_ACTIVE_SECS))
    THEN #PF((DS:RCX); FI;

(* Check the destination EPC page for concurrency *)
IF ( EPC page in use )
    THEN #GP(0); FI;

(* Re-Check security attributes of the destination EPC page *)
IF ( (EPCM(DS:RCX).VALID is 0) or (EPCM(DS:RCX).ENCLAVESECS ≠ CR_ACTIVE_SECS) )
    THEN #PF(DS:RCX); FI;

(* Verify that accept request matches current EPC page settings *)
IF ( (EPCM(DS:RCX).ENCLAVEADDRESS ≠ DS:RCX) or (EPCM(DS:RCX).PENDING ≠ SCRATCH_SECINFO.FLAGS.PENDING) or
    (EPCM(DS:RCX).MODIFIED ≠ SCRATCH_SECINFO.FLAGS.MODIFIED) or (EPCM(DS:RCX).R ≠ SCRATCH_SECINFO.FLAGS.R) or
    (EPCM(DS:RCX).W ≠ SCRATCH_SECINFO.FLAGS.W) or (EPCM(DS:RCX).X ≠ SCRATCH_SECINFO.FLAGS.X) or
    (EPCM(DS:RCX).PT ≠ SCRATCH_SECINFO.FLAGS.PT) )
```

```
    THEN
        RFLAGS.ZF := 1;
        RAX := SGX_PAGE_ATTRIBUTES_MISMATCH;
        GOTO DONE;
FI;
(* Check that all required threads have left enclave *)
IF (Tracking not correct)
    THEN
        RFLAGS.ZF := 1;
        RAX := SGX_NOT_TRACKED;
        GOTO DONE;
FI;

(* Get pointer to the SECS to which the EPC page belongs *)
TMP_SECS = << Obtain physical address of SECS through EPCM(DS:RCX)>>
(* For TCS pages, perform additional checks *)
IF (SCRATCH_SECINFO.FLAGS.PT = PT_TCS)
    THEN
        IF (DS:RCX.RESERVED ≠ 0) #GP(0); FI;

    (* Check that TCS.FLAGS.DBGOPTIN, TCS stack, and TCS status are correctly initialized *)
    (* check that TCS.PREVSSP is 0 *)
    IF ( ((DS:RCX).FLAGS.DBGOPTIN is not 0) or ((DS:RCX).CSSA ≥ (DS:RCX).NSSA) or ((DS:RCX).AEP is not 0) or ((DS:RCX).STATE is not 0)
or ((CPUID.(EAX=07H, ECX=0H):ECX[CET_SS] = 1) AND ((DS:RCX).PREVSSP != 0)))
        THEN #GP(0); FI;

    (* Check consistency of FS & GS Limit *)
    IF ( (TMP_SECS.ATTRIBUTES.MODE64BIT is 0) and ((DS:RCX.FSLIMIT & FFFH ≠ FFFH) or (DS:RCX.GSLIMIT & FFFH ≠ FFFH)) )
        THEN #GP(0); FI;
FI;

(* Clear PENDING/MODIFIED flags to mark accept operation complete *)
EPCM(DS:RCX).PENDING := 0;
EPCM(DS:RCX).MODIFIED := 0;
EPCM(DS:RCX).PR := 0;

(* Clear EAX and ZF to indicate successful completion *)
RFLAGS.ZF := 0;
RAX := 0;

DONE:
RFLAGS.CF,PF,AF,OF,SF := 0;
```

Flags Affected

Sets ZF if page cannot be accepted, otherwise cleared. Clears CF, PF, AF, OF, SF

Protected Mode Exceptions

#GP(0)	If executed outside an enclave.
	If a memory operand effective address is outside the DS segment limit.
	If a memory operand is not properly aligned.
	If a memory operand is locked.
#PF(error code)	If a page fault occurs in accessing memory operands.
	If a memory operand is not an EPC page.
	If EPC page has incorrect page type or security attributes.

64-Bit Mode Exceptions

#GP(0)	If executed outside an enclave.
	If a memory operand is non-canonical form.
	If a memory operand is not properly aligned.
	If a memory operand is locked.
#PF(error code)	If a page fault occurs in accessing memory operands.
	If a memory operand is not an EPC page.
	If EPC page has incorrect page type or security attributes.

EACCEPTCOPY—Initialize a Pending Page

Opcode/ Instruction	Op/En	64/32 bit Mode Support	CPUID Feature Flag	Description
EAX = 07H ENCLU[EACCEPTCOPY]	IR	V/V	SGX2	This leaf function initializes a dynamically allocated EPC page from another page in the EPC.

Instruction Operand Encoding

Op/En	EAX		RBX	RCX	RDX
IR	EACCEPTCOPY (In)	Return Error Code (Out)	Address of a SECINFO (In)	Address of the destination EPC page (In)	Address of the source EPC page (In)

Description

This leaf function copies the contents of an existing EPC page into an uninitialized EPC page (created by EAUG). After initialization, the instruction may also modify the access rights associated with the destination EPC page. This instruction leaf can only be executed when inside the enclave.

RBX contains the effective address of a SECINFO structure while RCX and RDX each contain the effective address of an EPC page. The table below provides additional information on the memory parameter of the EACCEPTCOPY leaf function.

EACCEPTCOPY Memory Parameter Semantics

SECINFO	EPCPAGE (Destination)	EPCPAGE (Source)
Read access permitted by Non Enclave	Read/Write access permitted by Enclave	Read access permitted by Enclave

The instruction faults if any of the following:

EACCEPTCOPY Faulting Conditions

The operands are not properly aligned.	If security attributes of the SECINFO page make the page inaccessible.
The EPC page is locked by another thread.	If security attributes of the source EPC page make the page inaccessible.
The EPC page is not valid.	RBX does not contain an effective address in an EPC page in the running enclave.
SECINFO contains an invalid request.	RCX/RDX does not contain an effective address of an EPC page in the running enclave.

The error codes are:

Table 38-57. EACCEPTCOPY Return Value in RAX

Error Code (see Table 38-4)	Description
No Error	EACCEPTCOPY successful.
SGX_PAGE_ATTRIBUTES_MISMATCH	The attributes of the target EPC page do not match the expected values.

Concurrency Restrictions

Table 38-58. Base Concurrency Restrictions of EACCEPTCOPY

Leaf	Parameter	Base Concurrency Restrictions		
		Access	On Conflict	SGX_CONFLICT VM Exit Qualification
EACCEPTCOPY	Target [DS:RCX]	Concurrent		
	Source [DS:RDX]	Concurrent		
	SECINFO [DS:RBX]	Concurrent		

Table 38-59. Additional Concurrency Restrictions of EACCEPTCOPY

Leaf	Parameter	Additional Concurrency Restrictions					
		vs. EACCEPT, EACCEPTCOPY, EMODPE, EMODPR, EMODT		vs. EADD, EEXTEND, EINIT		vs. ETRACK, ETRACKC	
		Access	On Conflict	Access	On Conflict	Access	On Conflict
EACCEPTCOPY	Target [DS:RCX]	Exclusive	#GP	Concurrent		Concurrent	
	Source [DS:RDX]	Concurrent		Concurrent		Concurrent	
	SECINFO [DS:RBX]	Concurrent		Concurrent		Concurrent	

Operation

Temp Variables in EACCEPTCOPY Operational Flow

Name	Type	Size (bits)	Description
SCRATCH_SECINFO	SECINFO	512	Scratch storage for holding the contents of DS:RBX.

```
IF (DS:RBX is not 64Byte Aligned)
    THEN #GP(0); FI;

IF ( (DS:RCX is not 4KByte Aligned) or (DS:RDX is not 4KByte Aligned) )
    THEN #GP(0); FI;

IF ((DS:RBX is not within CR_ELRANGE) or (DS:RCX is not within CR_ELRANGE) or (DS:RDX is not within CR_ELRANGE))
    THEN #GP(0); FI;

IF (DS:RBX does not resolve within an EPC)
    THEN #PF(DS:RBX); FI;

IF (DS:RCX does not resolve within an EPC)
    THEN #PF(DS:RCX); FI;

IF (DS:RDX does not resolve within an EPC)
    THEN #PF(DS:RDX); FI;

IF ( (EPCM(DS:RBX &~FFFH).VALID = 0) or (EPCM(DS:RBX &~FFFH).R = 0) or (EPCM(DS:RBX &~FFFH).PENDING ≠ 0) or
    (EPCM(DS:RBX &~FFFH).MODIFIED ≠ 0) or (EPCM(DS:RBX &~FFFH).BLOCKED ≠ 0) or (EPCM(DS:RBX &~FFFH).PT ≠ PT_REG) or
    (EPCM(DS:RBX &~FFFH).ENCLAVESECS ≠ CR_ACTIVE_SECS) or
    (EPCM(DS:RBX &~FFFH).ENCLAVEADDRESS ≠ DS:RBX) )
    THEN #PF(DS:RBX); FI;
```

```
(* Copy 64 bytes of contents *)
SCRATCH_SECINFO := DS:RBX;

(* Check for misconfigured SECINFO flags*)
IF ( (SCRATCH_SECINFO reserved fields are not zero ) or (SCRATCH_SECINFO.FLAGS.R=0) AND(SCRATCH_SECINFO.FLAGS.W≠0 ) or
     (SCRATCH_SECINFO.FLAGS.PT is not PT_REG) )
     THEN #GP(0); FI;

(* Check security attributes of the source EPC page *)
IF ( (EPCM(DS:RDX).VALID = 0) or (EPCM(DS:RCX).R = 0) or (EPCM(DS:RDX).PENDING ≠ 0) or (EPCM(DS:RDX).MODIFIED ≠ 0) or
     (EPCM(DS:RDX).BLOCKED ≠ 0) or (EPCM(DS:RDX).PT ≠ PT_REG) or (EPCM(DS:RDX).ENCLAVESECS ≠ CR_ACTIVE_SECS) or
     (EPCM(DS:RDX).ENCLAVEADDRESS ≠ DS:RDX))
     THEN #PF(DS:RDX); FI;

(* Check security attributes of the destination EPC page *)
IF ( (EPCM(DS:RCX).VALID = 0) or (EPCM(DS:RCX).PENDING ≠ 1) or (EPCM(DS:RCX).MODIFIED ≠ 0) or
     (EPCM(DS:RDX).BLOCKED ≠ 0) or (EPCM(DS:RCX).PT ≠ PT_REG) or (EPCM(DS:RCX).ENCLAVESECS ≠ CR_ACTIVE_SECS) )
     THEN
          RFLAGS.ZF := 1;
          RAX := SGX_PAGE_ATTRIBUTES_MISMATCH;
          GOTO DONE;
FI;

(* Check the destination EPC page for concurrency *)
IF (destination EPC page in use )
     THEN #GP(0); FI;

(* Re-Check security attributes of the destination EPC page *)
IF ( (EPCM(DS:RCX).VALID = 0) or (EPCM(DS:RCX).PENDING ≠ 1) or (EPCM(DS:RCX).MODIFIED ≠ 0) or
     (EPCM(DS:RCX).R ≠ 1) or (EPCM(DS:RCX).W ≠ 1) or (EPCM(DS:RCX).X ≠ 0) or
     (EPCM(DS:RCX).PT ≠ SCRATCH_SECINFO.FLAGS.PT) or (EPCM(DS:RCX).ENCLAVESECS ≠ CR_ACTIVE_SECS) or
     (EPCM(DS:RCX).ENCLAVEADDRESS ≠ DS:RCX))
     THEN
          RFLAGS.ZF := 1;
          RAX := SGX_PAGE_ATTRIBUTES_MISMATCH;
          GOTO DONE;
FI;

(* Copy 4KBbytes form the source to destination EPC page*)
DS:RCX[32767:0] := DS:RDX[32767:0];

(* Update EPCM permissions *)
EPCM(DS:RCX).R := SCRATCH_SECINFO.FLAGS.R;
EPCM(DS:RCX).W := SCRATCH_SECINFO.FLAGS.W;
EPCM(DS:RCX).X := SCRATCH_SECINFO.FLAGS.X;
EPCM(DS:RCX).PENDING := 0;

RFLAGS.ZF := 0;
RAX := 0;

DONE:
RFLAGS.CF,PF,AF,OF,SF := 0;
```

Flags Affected

Sets ZF if page is not modifiable, otherwise cleared. Clears CF, PF, AF, OF, SF

Protected Mode Exceptions

#GP(0)	If executed outside an enclave.
	If a memory operand effective address is outside the DS segment limit.
	If a memory operand is not properly aligned.
	If a memory operand is locked.
#PF(error code)	If a page fault occurs in accessing memory operands.
	If a memory operand is not an EPC page.
	If EPC page has incorrect page type or security attributes.

64-Bit Mode Exceptions

#GP(0)	If executed outside an enclave.
	If a memory operand is non-canonical form.
	If a memory operand is not properly aligned.
	If a memory operand is locked.
#PF(error code)	If a page fault occurs in accessing memory operands.
	If a memory operand is not an EPC page.
	If EPC page has incorrect page type or security attributes.

EENTER—Enters an Enclave

Opcode/ Instruction	Op/En	64/32 bit Mode Support	CPUID Feature Flag	Description
EAX = 02H ENCLU[EENTER]	IR	V/V	SGX1	This leaf function is used to enter an enclave.

Instruction Operand Encoding

Op/En	EAX		RBX	RCX	
IR	EENTER (In)	Content of RBX.CSSA (Out)	Address of a TCS (In)	Address of AEP (In)	Address of IP following EENTER (Out)

Description

The ENCLU[EENTER] instruction transfers execution to an enclave. At the end of the instruction, the logical processor is executing in enclave mode at the RIP computed as EnclaveBase + TCS.OENTRY. If the target address is not within the CS segment (32-bit) or is not canonical (64-bit), a #GP(0) results.

EENTER Memory Parameter Semantics

TCS
Enclave access

EENTER is a serializing instruction. The instruction faults if any of the following occurs:

Address in RBX is not properly aligned.	Any TCS.FLAGS's must-be-zero bit is not zero.
TCS pointed to by RBX is not valid or available or locked.	Current 32/64 mode does not match the enclave mode in SECS.ATTRIBUTES.MODE64.
The SECS is in use.	Either of TCS-specified FS and GS segment is not a subsets of the current DS segment.
Any one of DS, ES, CS, SS is not zero.	If XSAVE available, CR4.OSXSAVE = 0, but SECS.ATTRIBUTES.XFRM ≠ 3.
CR4.OSFXSR ≠ 1.	If CR4.OSXSAVE = 1, SECS.ATTRIBUTES.XFRM is not a subset of XCR0.

The following operations are performed by EENTER:

- RSP and RBP are saved in the current SSA frame on EENTER and are automatically restored on EEXIT or interrupt.
- The AEP contained in RCX is stored into the TCS for use by AEXs.FS and GS (including hidden portions) are saved and new values are constructed using TCS.OFSBASE/GSBASE (32 and 64-bit mode) and TCS.OFSLIMIT/GSLIMIT (32-bit mode only). The resulting segments must be a subset of the DS segment.
- If CR4.OSXSAVE == 1, XCR0 is saved and replaced by SECS.ATTRIBUTES.XFRM. The effect of RFLAGS.TF depends on whether the enclave entry is opt-in or opt-out (see Section 40.1.2):
  - — On opt-out entry, TF is saved and cleared (it is restored on EEXIT or AEX). Any attempt to set TF via a POPF instruction while inside the enclave clears TF (see Section 40.2.5).
  - — On opt-in entry, a single-step debug exception is pended on the instruction boundary immediately after EENTER (see Section 40.2.2).
- All code breakpoints that do not overlap with ELRANGE are also suppressed. If the entry is an opt-out entry, all code and data breakpoints that overlap with the ELRANGE are suppressed.
- On opt-out entry, a number of performance monitoring counters and behaviors are modified or suppressed (see Section 40.2.3):

— All performance monitoring activity on the current thread is suppressed except for incrementing and firing of FIXED_CTR1 and FIXED_CTR2.

— PEBS is suppressed.

— AnyThread counting on other threads is demoted to MyThread mode and IA32_PERF_GLOBAL_STATUS[60] on that thread is set

— If the opt-out entry on a hardware thread results in suppression of any performance monitoring, then the processor sets IA32_PERF_GLOBAL_STATUS[60] and IA32_PERF_GLOBAL_STATUS[63].

Concurrency Restrictions

Table 38-60. Base Concurrency Restrictions of EENTER

Leaf	Parameter	Base Concurrency Restrictions		
		Access	On Conflict	SGX_CONFLICT VM Exit Qualification
EENTER	TCS [DS:RBX]	Shared	#GP	

Table 38-61. Additional Concurrency Restrictions of EENTER

Leaf	Parameter	Additional Concurrency Restrictions					
		vs. EACCEPT, EACCEPTCOPY, EMODPE, EMODPR, EMODT		vs. EADD, EEXTEND, EINIT		vs. ETRACK, ETRACKC	
		Access	On Conflict	Access	On Conflict	Access	On Conflict
EENTER	TCS [DS:RBX]	Concurrent		Concurrent		Concurrent	

Operation

Temp Variables in EENTER Operational Flow

Name	Type	Size (Bits)	Description
TMP_FSBASE	Effective Address	32/64	Proposed base address for FS segment.
TMP_GSBASE	Effective Address	32/64	Proposed base address for FS segment.
TMP_FSLIMIT	Effective Address	32/64	Highest legal address in proposed FS segment.
TMP_GSLIMIT	Effective Address	32/64	Highest legal address in proposed GS segment.
TMP_XSIZE	integer	64	Size of XSAVE area based on SECS.ATTRIBUTES.XFRM.
TMP_SSA_PAGE	Effective Address	32/64	Pointer used to iterate over the SSA pages in the current frame.
TMP_GPR	Effective Address	32/64	Address of the GPR area within the current SSA frame.

```
TMP_MODE64 := ((IA32_EFER.LMA = 1) && (CS.L = 1));

(* Make sure DS is usable, expand up *)
IF (TMP_MODE64 = 0 and (DS not usable or ( ( DS[S] = 1) and (DS[bit 11] = 0) and DS[bit 10] = 1) ) )
    THEN #GP(0); FI;

(* Check that CS, SS, DS, ES.base is 0 *)
IF (TMP_MODE64 = 0)
    THEN
        IF(CS.base ≠ 0 or DS.base ≠ 0) #GP(0); FI;
        IF(ES usable and ES.base ≠ 0) #GP(0); FI;
        IF(SS usable and SS.base ≠ 0) #GP(0); FI;
        IF(SS usable and SS.B = 0) #GP(0); FI;
```

```
FI;

IF (DS:RBX is not 4KByte Aligned)
    THEN #GP(0); FI;

IF (DS:RBX does not resolve within an EPC)
    THEN #PF(DS:RBX); FI;

(* Check AEP is canonical*)
IF (TMP_MODE64 = 1 and (CS:RCX is not canonical) )
    THEN #GP(0); FI;

(* Check concurrency of TCS operation*)
IF (Other Intel SGX instructions is operating on TCS)
    THEN #GP(0); FI;

(* TCS verification *)
IF (EPCM(DS:RBX).VALID = 0)
    THEN #PF(DS:RBX); FI;

IF (EPCM(DS:RBX).BLOCKED = 1)
    THEN #PF(DS:RBX); FI;

IF ( (EPCM(DS:RBX).ENCLAVEADDRESS ≠ DS:RBX) or (EPCM(DS:RBX).PT ≠ PT_TCS) )
    THEN #PF(DS:RBX); FI;

IF ((EPCM(DS:RBX).PENDING = 1) or (EPCM(DS:RBX).MODIFIED = 1))
    THEN #PF(DS:RBX); FI;

IF ( (DS:RBX).OSSA is not 4KByte Aligned)
    THEN #GP(0); FI;

(* Check proposed FS and GS *)
IF ( ( (DS:RBX).OFSBASE is not 4KByte Aligned) or ( (DS:RBX).OGSBASE is not 4KByte Aligned) )
    THEN #GP(0); FI;

(* Get the SECS for the enclave in which the TCS resides *)
TMP_SECS := Address of SECS for TCS;

(* Ensure that the FLAGS field in the TCS does not have any reserved bits set *)
IF ( ( (DS:RBX).FLAGS & FFFFFFFFFFFFFFFEH) ≠ 0)
    THEN #GP(0); FI;

(* SECS must exist and enclave must have previously been EINITted *)
IF (the enclave is not already initialized)
    THEN #GP(0); FI;

(* make sure the logical processor's operating mode matches the enclave *)
IF ( (TMP_MODE64 ≠ TMP_SECS.ATTRIBUTES.MODE64BIT) )
    THEN #GP(0); FI;

IF (CR4.OSFXSR = 0)
    THEN #GP(0); FI;
```

```
(* Check for legal values of SECS.ATTRIBUTES.XFRM *)
IF (CR4.OSXSAVE = 0)
    THEN
        IF (TMP_SECS.ATTRIBUTES.XFRM ≠ 03H) THEN #GP(0); FI;
    ELSE
        IF ( (TMP_SECS.ATTRIBUTES.XFRM & XCR0) ≠ TMP_SECS.ATTRIBUES.XFRM) THEN #GP(0); FI;
FI;

(* Make sure the SSA contains at least one more frame *)
IF ( (DS:RBX).CSSA ≥ (DS:RBX).NSSA)
    THEN #GP(0); FI;

(* Compute linear address of SSA frame *)
TMP_SSA := (DS:RBX).OSSA + TMP_SECS.BASEADDR + 4096 * TMP_SECS.SSAFRAMESIZE * (DS:RBX).CSSA;
TMP_XSIZE := compute_XSAVE_frame_size(TMP_SECS.ATTRIBUTES.XFRM);

FOR EACH TMP_SSA_PAGE = TMP_SSA to TMP_SSA + TMP_XSIZE
    (* Check page is read/write accessible *)
    Check that DS:TMP_SSA_PAGE is read/write accessible;
    If a fault occurs, release locks, abort, and deliver that fault;

    IF (DS:TMP_SSA_PAGE does not resolve to EPC page)
        THEN #PF(DS:TMP_SSA_PAGE); FI;
    IF (EPCM(DS:TMP_SSA_PAGE).VALID = 0)
        THEN #PF(DS:TMP_SSA_PAGE); FI;
    IF (EPCM(DS:TMP_SSA_PAGE).BLOCKED = 1)
        THEN #PF(DS:TMP_SSA_PAGE); FI;
    IF ((EPCM(DS:TMP_SSA_PAGE).PENDING = 1) or (EPCM(DS:TMP_SSA_PAGE).MODIFIED = 1))
        THEN #PF(DS:TMP_SSA_PAGE); FI;
    IF ( ( EPCM(DS:TMP_SSA_PAGE).ENCLAVEADDRESS ≠ DS:TMP_SSA_PAGE) or (EPCM(DS:TMP_SSA_PAGE).PT ≠ PT_REG) or
        (EPCM(DS:TMP_SSA_PAGE).ENCLAVESECS ≠ EPCM(DS:RBX).ENCLAVESECS) or
        (EPCM(DS:TMP_SSA_PAGE).R = 0) or (EPCM(DS:TMP_SSA_PAGE).W = 0) )
        THEN #PF(DS:TMP_SSA_PAGE); FI;
    CR_XSAVE_PAGE_n := Physical_Address(DS:TMP_SSA_PAGE);
ENDFOR

(* Compute address of GPR area*)
TMP_GPR := TMP_SSA + 4096 * DS:TMP_SECS.SSAFRAMESIZE - sizeof(GPRSGX_AREA);
If a fault occurs; release locks, abort, and deliver that fault;

IF (DS:TMP_GPR does not resolve to EPC page)
    THEN #PF(DS:TMP_GPR); FI;
IF (EPCM(DS:TMP_GPR).VALID = 0)
    THEN #PF(DS:TMP_GPR); FI;
IF (EPCM(DS:TMP_GPR).BLOCKED = 1)
    THEN #PF(DS:TMP_GPR); FI;
IF ((EPCM(DS:TMP_GPR).PENDING = 1) or (EPCM(DS:TMP_GPR).MODIFIED = 1))
    THEN #PF(DS:TMP_GPR); FI;
IF ( ( EPCM(DS:TMP_GPR).ENCLAVEADDRESS ≠ DS:TMP_GPR) or (EPCM(DS:TMP_GPR).PT ≠ PT_REG) or
    (EPCM(DS:TMP_GPR).ENCLAVESECS EPCM(DS:RBX).ENCLAVESECS) or
    (EPCM(DS:TMP_GPR).R = 0) or (EPCM(DS:TMP_GPR).W = 0) )
    THEN #PF(DS:TMP_GPR); FI;

IF (TMP_MODE64 = 0)
```

```
    THEN
        IF (TMP_GPR + (GPR_SIZE -1) is not in DS segment) THEN #GP(0); FI;
FI;

CR_GPR_PA := Physical_Address (DS: TMP_GPR);

(* Validate TCS.OENTRY *)
TMP_TARGET := (DS:RBX).OENTRY + TMP_SECS.BASEADDR;
IF (TMP_MODE64 = 1)
    THEN
        IF (TMP_TARGET is not canonical) THEN #GP(0); FI;
    ELSE
        IF (TMP_TARGET > CS limit) THEN #GP(0); FI;
FI;

(* Check proposed FS/GS segments fall within DS *)
IF (TMP_MODE64 = 0)
    THEN
        TMP_FSBASE := (DS:RBX).OFSBASE + TMP_SECS.BASEADDR;
        TMP_FSLIMIT := (DS:RBX).OFSBASE + TMP_SECS.BASEADDR + (DS:RBX).FSLIMIT;
        TMP_GSBASE := (DS:RBX).OGSBASE + TMP_SECS.BASEADDR;
        TMP_GSLIMIT := (DS:RBX).OGSBASE + TMP_SECS.BASEADDR + (DS:RBX).GSLIMIT;
        (* if FS wrap-around, make sure DS has no holes*)
        IF (TMP_FSLIMIT < TMP_FSBASE)
            THEN
                IF (DS.limit < 4GB) THEN #GP(0); FI;
            ELSE
                IF (TMP_FSLIMIT > DS.limit) THEN #GP(0); FI;
        FI;
        (* if GS wrap-around, make sure DS has no holes*)
        IF (TMP_GSLIMIT < TMP_GSBASE)
            THEN
                IF (DS.limit < 4GB) THEN #GP(0); FI;
            ELSE
                IF (TMP_GSLIMIT > DS.limit) THEN #GP(0); FI;
        FI;
    ELSE
        TMP_FSBASE := (DS:RBX).OFSBASE + TMP_SECS.BASEADDR;
        TMP_GSBASE := (DS:RBX).OGSBASE + TMP_SECS.BASEADDR;
        IF ( (TMP_FSBASE is not canonical) or (TMP_GSBASE is not canonical))
            THEN #GP(0); FI;
FI;

(* Ensure the enclave is not already active and this thread is the only one using the TCS*)
IF (DS:RBX.STATE = ACTIVE)
    THEN #GP(0); FI;

TMP_IA32_U_CET := 0
TMP_SSP : = 0

IF CPUID.(EAX=12H, ECX=1):EAX[6] = 1
    THEN
        IF ( CR4.CET = 0 )
            THEN
```

```
                (* If part does not support CET or CET has not been enabled and enclave requires CET then fail *)
                IF ( TMP_SECS.CET_ATTRIBUTES ≠ 0 OR TMP_SECS.CET_LEG_BITMAP_OFFSET ≠ 0 ) #GP(0); FI;
        FI;
        (* If indirect branch tracking or shadow stacks enabled but CET state save area is not 16B aligned then fail EENTER *)
        IF ( TMP_SECS.CET_ATTRIBUTES.SH_STK_EN = 1 OR TMP_SECS.CET_ATTRIBUTES.ENDBR_EN = 1 )
            THEN
                IF (DS:RBX.OCETSSA is not 16B aligned) #GP(0); FI;
        FI;

    IF (TMP_SECS.CET_ATTRIBUTES.SH_STK_EN OR TMP_SECS.CET_ATTRIBUTES.ENDBR_EN)
        THEN
            (* Setup CET state from SECS, note tracker goes to IDLE *)
            TMP_IA32_U_CET = TMP_SECS.CET_ATTRIBUTES;
            IF (TMP_IA32_U_CET.LEG_IW_EN = 1 AND TMP_IA32_U_CET.ENDBR_EN = 1 )
                THEN
                    TMP_IA32_U_CET := TMP_IA32_U_CET + TMP_SECS.BASEADDR;
                    TMP_IA32_U_CET := TMP_IA32_U_CET + TMP_SECS.CET_LEG_BITMAP_BASE;
            FI;

            (* Compute linear address of what will become new CET state save area and cache its PA *)
            TMP_CET_SAVE_AREA = DS:RBX.OCETSSA + TMP_SECS.BASEADDR + (DS:RBX.CSSA) * 16
            TMP_CET_SAVE_PAGE = TMP_CET_SAVE_AREA & ~0xFFF;

            Check the TMP_CET_SAVE_PAGE page is read/write accessible
            If fault occurs release locks, abort, and deliver fault

            (* Read the EPCM VALID, PENDING, MODIFIED, BLOCKED, and PT fields atomically *)
            IF ((DS:TMP_CET_SAVE_PAGE Does NOT RESOLVE TO EPC PAGE) OR
             (EPCM(DS:TMP_CET_SAVE_PAGE).VALID = 0) OR
             (EPCM(DS:TMP_CET_SAVE_PAGE).PENDING = 1) OR
             (EPCM(DS:TMP_CET_SAVE_PAGE).MODIFIED = 1) OR
             (EPCM(DS:TMP_CET_SAVE_PAGE).BLOCKED = 1) OR
             (EPCM(DS:TMP_CET_SAVE_PAGE).R = 0) OR
             (EPCM(DS:TMP_CET_SAVE_PAGE).W = 0) OR
             (EPCM(DS:TMP_CET_SAVE_PAGE).ENCLAVEADDRESS ≠ DS:TMP_CET_SAVE_PAGE) OR
             (EPCM(DS:TMP_CET_SAVE_PAGE).PT ≠ PT_SS_REST) OR
             (EPCM(DS:TMP_CET_SAVE_PAGE).ENCLAVESECS ≠ EPCM(DS:RBX).ENCLAVESECS))
                THEN
                    #PF(DS:TMP_CET_SAVE_PAGE);
            FI;

            CR_CET_SAVE_AREA_PA := Physical address(DS:TMP_CET_SAVE_AREA)

            IF TMP_IA32_U_CET.SH_STK_EN = 1
                THEN
                    TMP_SSP = TCS.PREVSSP;
            FI;
    FI;
FI;

CR_ENCLAVE_MODE := 1;
CR_ACTIVE_SECS := TMP_SECS;
CR_ELRANGE := (TMPSECS.BASEADDR, TMP_SECS.SIZE);
```

```
(* Save state for possible AEXs *)
CR_TCS_PA := Physical_Address (DS:RBX);
CR_TCS_LA := RBX;
CR_TCS_LA.AEP := RCX;

(* Save the hidden portions of FS and GS *)
CR_SAVE_FS_selector := FS.selector;
CR_SAVE_FS_base := FS.base;
CR_SAVE_FS_limit := FS.limit;
CR_SAVE_FS_access_rights := FS.access_rights;
CR_SAVE_GS_selector := GS.selector;
CR_SAVE_GS_base := GS.base;
CR_SAVE_GS_limit := GS.limit;
CR_SAVE_GS_access_rights := GS.access_rights;

(* If XSAVE is enabled, save XCR0 and replace it with SECS.ATTRIBUTES.XFRM*)
IF (CR4.OSXSAVE = 1)
    CR_SAVE_XCR0 := XCR0;
    XCR0 := TMP_SECS.ATTRIBUTES.XFRM;
FI;

RCX := RIP;
RIP := TMP_TARGET;
RAX := (DS:RBX).CSSA;
(* Save the outside RSP and RBP so they can be restored on interrupt or EEXIT *)
DS:TMP_SSA.U_RSP := RSP;
DS:TMP_SSA.U_RBP := RBP;

(* Do the FS/GS swap *)
FS.base := TMP_FSBASE;
FS.limit := DS:RBX.FSLIMIT;
FS.type := 0001b;
FS.W := DS.W;
FS.S := 1;
FS.DPL := DS.DPL;
FS.G := 1;
FS.B := 1;
FS.P := 1;
FS.AVL := DS.AVL;
FS.L := DS.L;
FS.unusable := 0;
FS.selector := 0BH;

GS.base := TMP_GSBASE;
GS.limit := DS:RBX.GSLIMIT;
GS.type := 0001b;
GS.W := DS.W;
GS.S := 1;
GS.DPL := DS.DPL;
GS.G := 1;
GS.B := 1;
GS.P := 1;
GS.AVL := DS.AVL;
GS.L := DS.L;
```

```
GS.unusable := 0;
GS.selector := 0BH;

CR_DBGOPTIN := TCS.FLAGS.DBGOPTIN;
Suppress_all_code_breakpoints_that_are_outside_ELRANGE;

IF (CR_DBGOPTIN = 0)
    THEN
        Suppress_all_code_breakpoints_that_overlap_with_ELRANGE;
        CR_SAVE_TF := RFLAGS.TF;
        RFLAGS.TF := 0;
        Suppress_monitor_trap_flag for the source of the execution of the enclave;
        Suppress any pending debug exceptions;
        Suppress any pending MTF VM exit;
    ELSE
        IF RFLAGS.TF = 1
            THEN pend a single-step #DB at the end of EENTER; FI;
        IF the “monitor trap flag” VM-execution control is set
            THEN pend an MTF VM exit at the end of EENTER; FI;
FI;

IF ((CPUID.(EAX=7H, ECX=0):EDX[CET_IBT] = 1) OR (CPUID.(EAX=7H, ECX=0):ECX[CET_SS] = 1)
    THEN
        (* Save enclosing application CET state into save registers *)
        CR_SAVE_IA32_U_CET := IA32_U_CET
        (* Setup enclave CET state *)
        IF CPUID.(EAX=07H, ECX=00h):ECX[CET_SS] = 1
            THEN
                CR_SAVE_SSP := SSP
                SSP := TMP_SSP
        FI;

        IA32_U_CET := TMP_IA32_U_CET;

FI;

Flush_linear_context;
Allow_front_end_to_begin_fetch_at_new_RIP;
```

Flags Affected

RFLAGS.TF is cleared on opt-out entry.

Protected Mode Exceptions

#GP(0)	If DS:RBX is not page aligned.
	If the enclave is not initialized.
	If part or all of the FS or GS segment specified by TCS is outside the DS segment or not properly aligned.
	If the thread is not in the INACTIVE state.
	If CS, DS, ES or SS bases are not all zero.
	If executed in enclave mode.
	If any reserved field in the TCS FLAG is set.
	If the target address is not within the CS segment.

	If CR4.OSFXSR = 0.
	If CR4.OSXSAVE = 0 and SECS.ATTRIBUTES.XFRM ≠ 3.
	If CR4.OSXSAVE = 1and SECS.ATTRIBUTES.XFRM is not a subset of XCR0.
#PF(error code)	If a page fault occurs in accessing memory.
	If DS:RBX does not point to a valid TCS.
	If one or more pages of the current SSA frame are not readable/writable, or do not resolve to a valid PT_REG EPC page.

64-Bit Mode Exceptions

#GP(0)	If DS:RBX is not page aligned.
	If the enclave is not initialized.
	If the thread is not in the INACTIVE state.
	If CS, DS, ES or SS bases are not all zero.
	If executed in enclave mode.
	If part or all of the FS or GS segment specified by TCS is outside the DS segment or not properly aligned.
	If the target address is not canonical.
	If CR4.OSFXSR = 0.
	If CR4.OSXSAVE = 0 and SECS.ATTRIBUTES.XFRM ≠ 3.
	If CR4.OSXSAVE = 1and SECS.ATTRIBUTES.XFRM is not a subset of XCR0.
#PF(error code)	If a page fault occurs in accessing memory operands.
	If DS:RBX does not point to a valid TCS.
	If one or more pages of the current SSA frame are not readable/writable, or do not resolve to a valid PT_REG EPC page.

EEXIT—Exits an Enclave

Opcode/ Instruction	Op/En	64/32 bit Mode Support	CPUID Feature Flag	Description
EAX = 04H ENCLU[EEXIT]	IR	V/V	SGX1	This leaf function is used to exit an enclave.

Instruction Operand Encoding

Op/En	EAX	RBX	RCX
IR	EEXIT (In)	Target address outside the enclave (In)	Address of the current AEP (Out)

Description

The ENCLU[EEXIT] instruction exits the currently executing enclave and branches to the location specified in RBX. RCX receives the current AEP. If RBX is not within the CS (32-bit mode) or is not canonical (64-bit mode) a #GP(0) results.

EEXIT Memory Parameter Semantics

Target Address
Non-Enclave read and execute access

If RBX specifies an address that is inside the enclave, the instruction will complete normally. The fetch of the next instruction will occur in non-enclave mode, but will attempt to fetch from inside the enclave. This fetch returns a fixed data pattern.

If secrets are contained in any registers, it is responsibility of enclave software to clear those registers.

If XCR0 was modified on enclave entry, it is restored to the value it had at the time of the most recent EENTER or ERESUME.

If the enclave is opt-out, RFLAGS.TF is loaded from the value previously saved on EENTER.

Code and data breakpoints are unsuppressed.

Performance monitoring counters are unsuppressed.

Concurrency Restrictions

Table 38-62. Base Concurrency Restrictions of EEXIT

Leaf	Parameter	Base Concurrency Restrictions		
		Access	On Conflict	SGX_CONFLICT VM Exit Qualification
EEXIT		Concurrent		

Table 38-63. Additional Concurrency Restrictions of EEXIT

Leaf	Parameter	Additional Concurrency Restrictions					
		vs. EACCEPT, EACCEPTCOPY, EMODPE, EMODPR, EMODT		vs. EADD, EEXTEND, EINIT		vs. ETRACK, ETRACKC	
		Access	On Conflict	Access	On Conflict	Access	On Conflict
EEXIT		Concurrent		Concurrent		Concurrent	

Operation

Temp Variables in EEXIT Operational Flow

Name	Type	Size (Bits)	Description
TMP_RIP	Effective Address	32/64	Saved copy of CRIP for use when creating LBR.

```
TMP_MODE64 := ((IA32_EFER.LMA = 1) && (CS.L = 1));

IF (TMP_MODE64 = 1)
    THEN
        IF (RBX is not canonical) THEN #GP(0); FI;
    ELSE
        IF (RBX > CS limit) THEN #GP(0); FI;
FI;

TMP_RIP := CRIP;
RIP := RBX;

(* Return current AEP in RCX *)
RCX := CR_TCS_PA.AEP;

(* Do the FS/GS swap *)
FS.selector := CR_SAVE_FS.selector;
FS.base := CR_SAVE_FS.base;
FS.limit := CR_SAVE_FS.limit;
FS.access_rights := CR_SAVE_FS.access_rights;
GS.selector := CR_SAVE_GS.selector;
GS.base := CR_SAVE_GS.base;
GS.limit := CR_SAVE_GS.limit;
GS.access_rights := CR_SAVE_GS.access_rights;

(* Restore XCR0 if needed *)
IF (CR4.OSXSAVE = 1)
    XCR0 := CR_SAVE__XCR0;
FI;

Unsuppress_all_code_breakpoints_that_are_outside_ELRANGE;

IF (CR_DBGOPTIN = 0)
    THEN
        UnSuppress_all_code_breakpoints_that_overlap_with_ELRANGE;
        Restore suppressed breakpoint matches;
        RFLAGS.TF := CR_SAVE_TF;
        UnSuppress_montior_trap_flag;
        UnSuppress_LBR_Generation;
        UnSuppress_performance monitoring_activity;
        Restore performance monitoring counter AnyThread demotion to MyThread in enclave back to AnyThread
FI;

IF RFLAGS.TF = 1
    THEN Pend Single-Step #DB at the end of EEXIT;
FI;
```

```
IF the "monitor trap flag" VM-execution control is set
    THEN pend a MTF VM exit at the end of EEXIT;
FI;

IF (CPUID.(EAX=12H, ECX=1):EAX[6] = 1)
    THEN
        (* Record PREVSSP *)
        IF (IA32_U_CET.SH_STK_EN == 1)
            THEN CR_TCS_PA.PREVSSP = SSP; FI;
FI;

IF ((CPUID.(EAX=7H, ECX=0):EDX[CET_IBT] = 1) OR (CPUID.(EAX=7, ECX=0):ECX[CET_SS] = 1)
    THEN
        (* Restore enclosing app's CET state from the save registers *)
        IA32_U_CET := CR_SAVE_IA32_U_CET;
        IF CPUID.(EAX=07H, ECX=00h):ECX[CET_SS] = 1
            THEN SSP := CR_SAVE_SSP; FI;

        (* Update enclosing app's TRACKER if enclosing app has indirect branch tracking enabled *)
        IF (CR4.CET = 1 AND IA32_U_CET.ENDBR_EN = 1)
            THEN
                IA32_U_CET.TRACKER := WAIT_FOR_ENDBRANCH;
                IA32_U_CET.SUPPRESS := 0
        FI;
FI;

CR_ENCLAVE_MODE := 0;
CR_TCS_PA.STATE := INACTIVE;

(* Assure consistent translations *)
Flush_linear_context;
```

Flags Affected

RFLAGS.TF is restored from the value previously saved in EENTER or ERESUME.

Protected Mode Exceptions

#GP(0)	If executed outside an enclave.
	If RBX is outside the CS segment.
#PF(error code)	If a page fault occurs in accessing memory.

64-Bit Mode Exceptions

#GP(0)	If executed outside an enclave.
	If RBX is not canonical.
#PF(error code)	If a page fault occurs in accessing memory operands.

EGETKEY—Retrieves a Cryptographic Key

Opcode/ Instruction	Op/En	64/32 bit Mode Support	CPUID Feature Flag	Description
EAX = 01H ENCLU[EGETKEY]	IR	V/V	SGX1	This leaf function retrieves a cryptographic key.

Instruction Operand Encoding

Op/En	EAX		RBX	RCX
IR	EGETKEY (In)	Return error code (Out)	Address to a KEYREQUEST (In)	Address of the OUTPUTDATA (In)

Description

The ENCLU[EGETKEY] instruction returns a 128-bit secret key from the processor specific key hierarchy. The register RBX contains the effective address of a KEYREQUEST structure, which the instruction interprets to determine the key being requested. The Requesting Keys section below provides a description of the keys that can be requested. The RCX register contains the effective address where the key will be returned. Both the addresses in RBX & RCX should be locations inside the enclave.

EGETKEY derives keys using a processor unique value to create a specific key based on a number of possible inputs. This instruction leaf can only be executed inside an enclave.

EEGETKEY Memory Parameter Semantics

KEYREQUEST	OUTPUTDATA
Enclave read access	Enclave write access

After validating the operands, the instruction determines which key is to be produced and performs the following actions:

- The instruction assembles the derivation data for the key based on the Table 38-64.
- Computes derived key using the derivation data and package specific value.
- Outputs the calculated key to the address in RCX.

The instruction fails with #GP(0) if the operands are not properly aligned. Successful completion of the instruction will clear RFLAGS.{ZF, CF, AF, OF, SF, PF}. The instruction returns an error code if the user tries to request a key based on an invalid CPUSVN or ISVSVN (when the user request is accepted, see the table below), requests a key for which it has not been granted the attribute to request, or requests a key that is not supported by the hardware. These checks may be performed in any order. Thus, an indication by error number of one cause (for example, invalid attribute) does not imply that there are not also other errors. Different processors may thus give different error numbers for the same Enclave. The correctness of software should not rely on the order resulting from the checks documented in this section. In such cases the ZF flag is set and the corresponding error bit (SGX_INVALID_SVN, SGX_INVALID_ATTRIBUTE, SGX_INVALID_KEYNAME) is set in RAX and the data at the address specified by RCX is unmodified.

Requesting Keys

The KEYREQUEST structure (see Section 35.18.1) identifies the key to be provided. The Keyrequest.KeyName field identifies which type of key is requested.

Deriving Keys

Key derivation is based on a combination of the enclave specific values (see Table 38-64) and a processor key. Depending on the key being requested a field may either be included by definition or the value may be included from the KeyRequest. A "yes" in Table 38-64 indicates the value for the field is included from its default location, identified in the source row, and a "request" indicates the values for the field is included from its corresponding KeyRequest field.

Table 38-64. Key Derivation

	Key Name	Attributes	Owner Epoch	CPU SVN	ISV SVN	ISV PRODID	ISVEXT PRODID	ISVFAM ILYID	MRENCLAVE	MRSIGNER	CONFIG ID	CONFIGS VN	RAND
Source	Key Dependent Constant	Y := SECS.ATTRIBUTES and SECS.MISCSELECT and SECS.CET_ATTRIBUTES; R := AttribMask & SECS.ATTRIBUTES and SECS.MISCSELECT and SECS.CET_ATTRIBUTES;	CR_SGX OWNER EPOCH	Y := CPUSVN Register; R := Req.CPU SVN;	R := Req.ISV SVN;	SECS. ISVID	SECS.IS VEXTPR ODID	SECS.IS VFAMIL YID	SECS. MRENCLAVE	SECS. MRSIGNER	SECS.CO NFIGID	SECS.CO NFIGSVN	Req. KEYID
EINITTOKEN	Yes	Request	Yes	Request	Request	Yes	No	No	No	Yes	No	No	Request
Report	Yes	Yes	Yes	Yes	No	No	No	No	Yes	No	Yes	Yes	Request
Seal	Yes	Request	Yes	Request	Request	Request	Request	Request	Request	Request	Request	Request	Request
Provisioning	Yes	Request	No	Request	Request	Yes	No	No	No	Yes	No	No	Yes
Provisioning Seal	Yes	Request	No	Request	Request	Request	Request	Request	No	Yes	Request	Request	Yes

Keys that permit the specification of a CPU or ISV's code's, or enclave configuration's SVNs have additional requirements. The caller may not request a key for an SVN beyond the current CPU, ISV or enclave configuration's SVN, respectively.

Several keys are access controlled. Access to the Provisioning Key and Provisioning Seal key requires the enclave's ATTRIBUTES.PROVISIONKEY be set. The EINITTOKEN Key requires ATTRIBUTES.EINITTOKEN_KEY be set and SECS.MRSIGNER equal IA32_SGXLEPUBKEYHASH.

Some keys are derived based on a hardcode PKCS padding constant (352 byte string):

HARDCODED_PKCS1_5_PADDING[15:0] := 0100H;

HARDCODED_PKCS1_5_PADDING[2655:16] := SignExtend330Byte(-1); // 330 bytes of 0FFH

HARDCODED_PKCS1_5_PADDING[2815:2656] := 2004000501020403650148866009060D30313000H;

The error codes are:

Table 38-65. EGETKEY Return Value in RAX

Error Code (see Table 38-4)	Value	Description
No Error	0	EGETKEY successful.
SGX_INVALID_ATTRIBUTE		The KEYREQUEST contains a KEYNAME for which the enclave is not authorized.
SGX_INVALID_CPUSVN		If KEYREQUEST.CPUSVN is an unsupported platforms CPUSVN value.
SGX_INVALID_ISVSVN		If KEYREQUEST software SVN (ISVSVN or CONFIGSVN) is greater than the enclave's corresponding SVN.
SGX_INVALID_KEYNAME		If KEYREQUEST.KEYNAME is an unsupported value.

Concurrency Restrictions

Table 38-66. Base Concurrency Restrictions of EGETKEY

Leaf	Parameter	Base Concurrency Restrictions		
		Access	On Conflict	SGX_CONFLICT VM Exit Qualification
EGETKEY	KEYREQUEST [DS:RBX]	Concurrent		
	OUTPUTDATA [DS:RCX]	Concurrent		

Table 38-67. Additional Concurrency Restrictions of EGETKEY

Leaf	Parameter	Additional Concurrency Restrictions					
		vs. EACCEPT, EACCEPTCOPY, EMODPE, EMODPR, EMODT		vs. EADD, EEXTEND, EINIT		vs. ETRACK, ETRACKC	
		Access	On Conflict	Access	On Conflict	Access	On Conflict
EGETKEY	KEYREQUEST [DS:RBX]	Concurrent		Concurrent		Concurrent	
	OUTPUTDATA [DS:RCX]	Concurrent		Concurrent		Concurrent	

Operation

Temp Variables in EGETKEY Operational Flow

Name	Type	Size (Bits)	Description
TMP_CURRENTSECS			Address of the SECS for the currently executing enclave.
TMP_KEYDEPENDENCIES			Temp space for key derivation.
TMP_ATTRIBUTES		128	Temp Space for the calculation of the sealable Attributes.
TMP_ISVEXTPRODID		16 bytes	Temp Space for ISVEXTPRODID.
TMP_ISVPRODID		2 bytes	Temp Space for ISVPRODID.
TMP_ISVFAMILYID		16 bytes	Temp Space for ISVFAMILYID.
TMP_CONFIGID		64 bytes	Temp Space for CONFIGID.
TMP_CONFIGSVN		2 bytes	Temp Space for CONFIGSVN.
TMP_OUTPUTKEY		128	Temp Space for the calculation of the key.

```
(* Make sure KEYREQUEST is properly aligned and inside the current enclave *)
IF ( (DS:RBX is not 512Byte aligned) or (DS:RBX is not within CR_ELRANGE) )
    THEN #GP(0); FI;

(* Make sure DS:RBX is an EPC address and the EPC page is valid *)
IF ( (DS:RBX does not resolve to an EPC address) or (EPCM(DS:RBX).VALID = 0) )
    THEN #PF(DS:RBX); FI;

IF (EPCM(DS:RBX).BLOCKED = 1)
    THEN #PF(DS:RBX); FI;

(* Check page parameters for correctness *)
IF ( (EPCM(DS:RBX).PT ≠ PT_REG) or (EPCM(DS:RBX).ENCLAVESECS ≠ CR_ACTIVE_SECS) or (EPCM(DS:RBX).PENDING = 1) or
    (EPCM(DS:RBX).MODIFIED = 1) or (EPCM(DS:RBX).ENCLAVEADDRESS ≠ (DS:RBX & ~0FFFH) ) or (EPCM(DS:RBX).R = 0) )
    THEN #PF(DS:RBX);
FI;

(* Make sure OUTPUTDATA is properly aligned and inside the current enclave *)
IF ( (DS:RCX is not 16Byte aligned) or (DS:RCX is not within CR_ELRANGE) )
    THEN #GP(0); FI;

(* Make sure DS:RCX is an EPC address and the EPC page is valid *)
IF ( (DS:RCX does not resolve to an EPC address) or (EPCM(DS:RCX).VALID = 0) )
```

```
    THEN #PF(DS:RCX); FI;

IF (EPCM(DS:RCX).BLOCKED = 1)
    THEN #PF(DS:RCX); FI;

(* Check page parameters for correctness *)
IF ( (EPCM(DS:RCX).PT ≠ PT_REG) or (EPCM(DS:RCX).ENCLAVESECS ≠ CR_ACTIVE_SECS) or (EPCM(DS:RCX).PENDING = 1) or
    (EPCM(DS:RCX).MODIFIED = 1) or (EPCM(DS:RCX).ENCLAVEADDRESS ≠ (DS:RCX & ~0FFFH) ) or (EPCM(DS:RCX).W = 0) )
    THEN #PF(DS:RCX);
FI;

(* Verify RESERVED spaces in KEYREQUEST are valid *)
IF ( (DS:RBX).RESERVED ≠ 0) or (DS:RBX.KEYPOLICY.RESERVED ≠ 0) )
    THEN #GP(0); FI;

TMP_CURRENTSECS := CR_ACTIVE_SECS;

(* Verify that CONFIGSVN & New Policy bits are not used if KSS is not enabled *)
IF ((TMP_CURRENTSECS.ATTRIBUTES.KSS == 0) AND ((DS:RBX.KEYPOLICY & 0x003C ≠ 0) OR (DS:RBX.CONFIGSVN > 0)))
    THEN #GP(0); FI;
(* Determine which enclave attributes that must be included in the key. Attributes that must always be include INIT & DEBUG *)
REQUIRED_SEALING_MASK[127:0] := 00000000 00000000 00000000 00000003H;
TMP_ATTRIBUTES := (DS:RBX.ATTRIBUTEMASK | REQUIRED_SEALING_MASK) & TMP_CURRENTSECS.ATTRIBUTES;

(* Compute MISCSELECT fields to be included *)
TMP_MISCSELECT := DS:RBX.MISCMASK & TMP_CURRENTSECS.MISCSELECT

(* Compute CET_ATTRIBUTES fields to be included *)
IF (CPUID.(EAX=12H, ECX=1):EAX[6] = 1)
    THEN TMP_CET_ATTRIBUTES := DS:RBX.CET_ATTRIBUTES_ MASK & TMP_CURRENTSECS.CET_ATTRIBUTES; FI;
TMP_KEYDEPENDENCIES := 0;

CASE (DS:RBX.KEYNAME)
    SEAL_KEY:
        IF (DS:RBX.CPUSVN is beyond current CPU configuration)
            THEN
                RFLAGS.ZF := 1;
                RAX := SGX_INVALID_CPUSVN;
                GOTO EXIT;
        FI;
        IF (DS:RBX.ISVSVN > TMP_CURRENTSECS.ISVSVN)
            THEN
                RFLAGS.ZF := 1;
                RAX := SGX_INVALID_ISVSVN;
                GOTO EXIT;
        FI;
        IF (DS:RBX.CONFIGSVN > TMP_CURRENTSECS.CONFIGSVN)
            THEN
                RFLAGS.ZF := 1;
                RAX := SGX_INVALID_ISVSVN;
                GOTO EXIT;
        FI;

        (*Include enclave identity?*)
```

```
            TMP_MRENCLAVE := 0;
            IF (DS:RBX.KEYPOLICY.MRENCLAVE = 1)
                  THEN TMP_MRENCLAVE := TMP_CURRENTSECS.MRENCLAVE;
            FI;
            (*Include enclave author?*)
            TMP_MRSIGNER := 0;
            IF (DS:RBX.KEYPOLICY.MRSIGNER = 1)
                  THEN TMP_MRSIGNER := TMP_CURRENTSECS.MRSIGNER;
            FI;
(* Include enclave product family ID? *)
   TMP_ISVFAMILYID := 0;
   IF (DS:RBX.KEYPOLICY.ISVFAMILYID = 1)
      THEN TMP_ISVFAMILYID := TMP_CURRENTSECS.ISVFAMILYID;
            FI;

   (* Include enclave product ID? *)
   TMP_ISVPRODID := 0;
   IF (DS:RBX.KEYPOLICY.NOISVPRODID = 0)
      TMP_ISVPRODID := TMP_CURRENTSECS.ISVPRODID;
            FI;

   (* Include enclave Config ID? *)
   TMP_CONFIGID := 0;
   TMP_CONFIGSVN := 0;
   IF (DS:RBX.KEYPOLICY.CONFIGID = 1)
      TMP_CONFIGID := TMP_CURRENTSECS.CONFIGID;
      TMP_CONFIGSVN := DS:RBX.CONFIGSVN;
            FI;

   (* Include enclave extended product ID? *)
   TMP_ISVEXTPRODID := 0;
   IF (DS:RBX.KEYPOLICY.ISVEXTPRODID = 1 )
      TMP_ISVEXTPRODID := TMP_CURRENTSECS.ISVEXTPRODID;
   FI;

            //Determine values key is based on
            TMP_KEYDEPENDENCIES.KEYNAME := SEAL_KEY;
            TMP_KEYDEPENDENCIES.ISVFAMILYID := TMP_ISVFAMILYID;
            TMP_KEYDEPENDENCIES.ISVEXTPRODID := TMP_ISVEXTPRODID;
            TMP_KEYDEPENDENCIES.ISVPRODID := TMP_ISVPRODID;
            TMP_KEYDEPENDENCIES.ISVSVN := DS:RBX.ISVSVN;
            TMP_KEYDEPENDENCIES.SGXOWNEREPOCH := CR_SGXOWNEREPOCH;
            TMP_KEYDEPENDENCIES.ATTRIBUTES := TMP_ATTRIBUTES;
            TMP_KEYDEPENDENCIES.ATTRIBUTESMASK := DS:RBX.ATTRIBUTEMASK;
            TMP_KEYDEPENDENCIES.MRENCLAVE := TMP_MRENCLAVE;
            TMP_KEYDEPENDENCIES.MRSIGNER := TMP_MRSIGNER;
            TMP_KEYDEPENDENCIES.KEYID := DS:RBX.KEYID;
            TMP_KEYDEPENDENCIES.SEAL_KEY_FUSES := CR_SEAL_FUSES;
            TMP_KEYDEPENDENCIES.CPUSVN := DS:RBX.CPUSVN;
            TMP_KEYDEPENDENCIES.PADDING := TMP_CURRENTSECS.PADDING;
            TMP_KEYDEPENDENCIES.MISCSELECT := TMP_MISCSELECT;
            TMP_KEYDEPENDENCIES.MISCMASK := ~DS:RBX.MISCMASK;
            TMP_KEYDEPENDENCIES.KEYPOLICY := DS:RBX.KEYPOLICY;
            TMP_KEYDEPENDENCIES.CONFIGID := TMP_CONFIGID;
```

```
        TMP_KEYDEPENDENCIES.CONFIGSVN := TMP_CONFIGSVN;
        IF CPUID.(EAX=12H, ECX=1):EAX[6] = 1
            THEN
                TMP_KEYDEPENDENCIES.CET_ATTRIBUTES := TMP_CET_ATTRIBUTES;
                TMP_KEYDEPENDENCIES.CET_ATTRIBUTES _MASK := DS:RBX.CET_ATTRIBUTES _MASK;
        FI;
        BREAK;
    REPORT_KEY:
        //Determine values key is based on
        TMP_KEYDEPENDENCIES.KEYNAME := REPORT_KEY;
        TMP_KEYDEPENDENCIES.ISVFAMILYID := 0;
        TMP_KEYDEPENDENCIES.ISVEXTPRODID := 0;
        TMP_KEYDEPENDENCIES.ISVPRODID := 0;
        TMP_KEYDEPENDENCIES.ISVSVN := 0;
        TMP_KEYDEPENDENCIES.SGXOWNEREPOCH := CR_SGXOWNEREPOCH;
        TMP_KEYDEPENDENCIES.ATTRIBUTES := TMP_CURRENTSECS.ATTRIBUTES;
        TMP_KEYDEPENDENCIES.ATTRIBUTESMASK := 0;
        TMP_KEYDEPENDENCIES.MRENCLAVE := TMP_CURRENTSECS.MRENCLAVE;
        TMP_KEYDEPENDENCIES.MRSIGNER := 0;
        TMP_KEYDEPENDENCIES.KEYID := DS:RBX.KEYID;
        TMP_KEYDEPENDENCIES.SEAL_KEY_FUSES := CR_SEAL_FUSES;
        TMP_KEYDEPENDENCIES.CPUSVN := CR_CPUSVN;
        TMP_KEYDEPENDENCIES.PADDING := HARDCODED_PKCS1_5_PADDING;
        TMP_KEYDEPENDENCIES.MISCSELECT := TMP_CURRENTSECS.MISCSELECT;
        TMP_KEYDEPENDENCIES.MISCMASK := 0;
        TMP_KEYDEPENDENCIES.KEYPOLICY := 0;
        TMP_KEYDEPENDENCIES.CONFIGID := TMP_CURRENTSECS.CONFIGID;
        TMP_KEYDEPENDENCIES.CONFIGSVN := TMP_CURRENTSECS.CONFIGSVN;
        IF (CPUID.(EAX=12H, ECX=1):EAX[6] = 1)
            THEN
                TMP_KEYDEPENDENCIES.CET_ATTRIBUTES := TMP_CURRENTSECS.CET_ATTRIBUTES;
                TMP_KEYDEPENDENCIES.CET_ATTRIBUTES_MASK := 0;
        FI;
        BREAK;
    EINITTOKEN_KEY:
        (* Check ENCLAVE has EINITTOKEN Key capability *)
        IF (TMP_CURRENTSECS.ATTRIBUTES.EINITTOKEN_KEY = 0)
            THEN
                RFLAGS.ZF := 1;
                RAX := SGX_INVALID_ATTRIBUTE;
                GOTO EXIT;
        FI;
        IF (DS:RBX.CPUSVN is beyond current CPU configuration)
            THEN
                RFLAGS.ZF := 1;
                RAX := SGX_INVALID_CPUSVN;
                GOTO EXIT;
        FI;
        IF (DS:RBX.ISVSVN > TMP_CURRENTSECS.ISVSVN)
            THEN
                RFLAGS.ZF := 1;
                RAX := SGX_INVALID_ISVSVN;
                GOTO EXIT;
        FI;
```

```
        (* Determine values key is based on *)
        TMP_KEYDEPENDENCIES.KEYNAME := EINITTOKEN_KEY;
        TMP_KEYDEPENDENCIES.ISVFAMILYID := 0;
        TMP_KEYDEPENDENCIES.ISVEXTPRODID := 0;
        TMP_KEYDEPENDENCIES.ISVPRODID := TMP_CURRENTSECS.ISVPRODID
        TMP_KEYDEPENDENCIES.ISVSVN := DS:RBX.ISVSVN;
        TMP_KEYDEPENDENCIES.SGXOWNEREPOCH := CR_SGXOWNEREPOCH;
        TMP_KEYDEPENDENCIES.ATTRIBUTES := TMP_ATTRIBUTES;
        TMP_KEYDEPENDENCIES.ATTRIBUTESMASK := 0;
        TMP_KEYDEPENDENCIES.MRENCLAVE := 0;
        TMP_KEYDEPENDENCIES.MRSIGNER := TMP_CURRENTSECS.MRSIGNER;
        TMP_KEYDEPENDENCIES.KEYID := DS:RBX.KEYID;
        TMP_KEYDEPENDENCIES.SEAL_KEY_FUSES := CR_SEAL_FUSES;
        TMP_KEYDEPENDENCIES.CPUSVN := DS:RBX.CPUSVN;
        TMP_KEYDEPENDENCIES.PADDING := TMP_CURRENTSECS.PADDING;
        TMP_KEYDEPENDENCIES.MISCSELECT := TMP_MISCSELECT;
        TMP_KEYDEPENDENCIES.MISCMASK := 0;
        TMP_KEYDEPENDENCIES.KEYPOLICY := 0;
        TMP_KEYDEPENDENCIES.CONFIGID := 0;
        TMP_KEYDEPENDENCIES.CONFIGSVN := 0;
        IF (CPUID.(EAX=12H, ECX=1):EAX[6] = 1)
            THEN
                TMP_KEYDEPENDENCIES.CET_ATTRIBUTES := TMP_CET_ATTRIBUTES;
                TMP_KEYDEPENDENCIES.CET_ATTRIBUTES _MASK := 0;
        FI;
        BREAK;
PROVISION_KEY:
(* Check ENCLAVE has PROVISIONING capability *)
        IF (TMP_CURRENTSECS.ATTRIBUTES.PROVISIONKEY = 0)
            THEN
                RFLAGS.ZF := 1;
                RAX := SGX_INVALID_ATTRIBUTE;
                GOTO EXIT;
        FI;
        IF (DS:RBX.CPUSVN is beyond current CPU configuration)
            THEN
                RFLAGS.ZF := 1;
                RAX := SGX_INVALID_CPUSVN;
                GOTO EXIT;
        FI;
        IF (DS:RBX.ISVSVN > TMP_CURRENTSECS.ISVSVN)
            THEN
                RFLAGS.ZF := 1;
                RAX := SGX_INVALID_ISVSVN;
                GOTO EXIT;
        FI;
        (* Determine values key is based on *)
        TMP_KEYDEPENDENCIES.KEYNAME := PROVISION_KEY;
        TMP_KEYDEPENDENCIES.ISVFAMILYID := 0;
        TMP_KEYDEPENDENCIES.ISVEXTPRODID := 0;
        TMP_KEYDEPENDENCIES.ISVPRODID := TMP_CURRENTSECS.ISVPRODID;
        TMP_KEYDEPENDENCIES.ISVSVN := DS:RBX.ISVSVN;
        TMP_KEYDEPENDENCIES.SGXOWNEREPOCH := 0;
        TMP_KEYDEPENDENCIES.ATTRIBUTES := TMP_ATTRIBUTES;
```

```
            TMP_KEYDEPENDENCIES.ATTRIBUTESMASK := DS:RBX.ATTRIBUTEMASK;
            TMP_KEYDEPENDENCIES.MRENCLAVE := 0;
            TMP_KEYDEPENDENCIES.MRSIGNER := TMP_CURRENTSECS.MRSIGNER;
            TMP_KEYDEPENDENCIES.KEYID := 0;
            TMP_KEYDEPENDENCIES.SEAL_KEY_FUSES := 0;
            TMP_KEYDEPENDENCIES.CPUSVN := DS:RBX.CPUSVN;
            TMP_KEYDEPENDENCIES.PADDING := TMP_CURRENTSECS.PADDING;
            TMP_KEYDEPENDENCIES.MISCSELECT := TMP_MISCSELECT;
            TMP_KEYDEPENDENCIES.MISCMASK := ~DS:RBX.MISCMASK;
            TMP_KEYDEPENDENCIES.KEYPOLICY := 0;
            TMP_KEYDEPENDENCIES.CONFIGID := 0;
            IF (CPUID.(EAX=12H, ECX=1):EAX[6] = 1)
                  THEN
                        TMP_KEYDEPENDENCIES.CET_ATTRIBUTES := TMP_CET_ATTRIBUTES;
                        TMP_KEYDEPENDENCIES.CET_ATTRIBUTES _MASK := 0;
            FI;
            BREAK;
      PROVISION_SEAL_KEY:
            (* Check ENCLAVE has PROVISIONING capability *)
            IF (TMP_CURRENTSECS.ATTRIBUTES.PROVISIONKEY = 0)
                  THEN
                        RFLAGS.ZF := 1;
                        RAX := SGX_INVALID_ATTRIBUTE;
                        GOTO EXIT;
            FI;
            IF (DS:RBX.CPUSVN is beyond current CPU configuration)
                  THEN
                        RFLAGS.ZF := 1;
                        RAX := SGX_INVALID_CPUSVN;
                        GOTO EXIT;
            FI;
            IF (DS:RBX.ISVSVN > TMP_CURRENTSECS.ISVSVN)
                  THEN
                        RFLAGS.ZF := 1;
                        RAX := SGX_INVALID_ISVSVN;
                        GOTO EXIT;
            FI;
(* Include enclave product family ID? *)
      TMP_ISVFAMILYID := 0;
      IF (DS:RBX.KEYPOLICY.ISVFAMILYID = 1)
         THEN TMP_ISVFAMILYID := TMP_CURRENTSECS.ISVFAMILYID;
            FI;

      (* Include enclave product ID? *)
      TMP_ISVPRODID := 0;
      IF (DS:RBX.KEYPOLICY.NOISVPRODID = 0)
         TMP_ISVPRODID := TMP_CURRENTSECS.ISVPRODID;
            FI;

      (* Include enclave Config ID? *)
      TMP_CONFIGID := 0;
      TMP_CONFIGSVN := 0;
      IF (DS:RBX.KEYPOLICY.CONFIGID = 1)
         TMP_CONFIGID := TMP_CURRENTSECS.CONFIGID;
```

```
        TMP_CONFIGSVN := DS:RBX.CONFIGSVN;
            FI;

    (* Include enclave extended product ID? *)
    TMP_ISVEXTPRODID := 0;
    IF (DS:RBX.KEYPOLICY.ISVEXTPRODID = 1)
        TMP_ISVEXTPRODID := TMP_CURRENTSECS.ISVEXTPRODID;
    FI;

            (* Determine values key is based on *)
            TMP_KEYDEPENDENCIES.KEYNAME := PROVISION_SEAL_KEY;
            TMP_KEYDEPENDENCIES.ISVFAMILYID := TMP_ISVFAMILYID;
            TMP_KEYDEPENDENCIES.ISVEXTPRODID := TMP_ISVEXTPRODID;
            TMP_KEYDEPENDENCIES.ISVPRODID := TMP_ISVPRODID;
            TMP_KEYDEPENDENCIES.ISVSVN := DS:RBX.ISVSVN;
            TMP_KEYDEPENDENCIES.SGXOWNEREPOCH := 0;
            TMP_KEYDEPENDENCIES.ATTRIBUTES := TMP_ATTRIBUTES;
            TMP_KEYDEPENDENCIES.ATTRIBUTESMASK := DS:RBX.ATTRIBUTEMASK;
            TMP_KEYDEPENDENCIES.MRENCLAVE := 0;
            TMP_KEYDEPENDENCIES.MRSIGNER := TMP_CURRENTSECS.MRSIGNER;
            TMP_KEYDEPENDENCIES.KEYID := 0;
            TMP_KEYDEPENDENCIES.SEAL_KEY_FUSES := CR_SEAL_FUSES;
            TMP_KEYDEPENDENCIES.CPUSVN := DS:RBX.CPUSVN;
            TMP_KEYDEPENDENCIES.PADDING := TMP_CURRENTSECS.PADDING;
            TMP_KEYDEPENDENCIES.MISCSELECT := TMP_MISCSELECT;
            TMP_KEYDEPENDENCIES.MISCMASK := ~DS:RBX.MISCMASK;
            TMP_KEYDEPENDENCIES.KEYPOLICY := DS:RBX.KEYPOLICY;
            TMP_KEYDEPENDENCIES.CONFIGID := TMP_CONFIGID;
            TMP_KEYDEPENDENCIES.CONFIGSVN := TMP_CONFIGSVN;
            IF (CPUID.(EAX=12H, ECX=1):EAX[6] = 1)
                THEN
                    TMP_KEYDEPENDENCIES.CET_ATTRIBUTES := TMP_CET_ATTRIBUTES;
                    TMP_KEYDEPENDENCIES.CET_ATTRIBUTES _MASK := 0;
            FI;
            BREAK;
    DEFAULT:
            (* The value of KEYNAME is invalid *)
            RFLAGS.ZF := 1;
            RAX := SGX_INVALID_KEYNAME;
            GOTO EXIT:
ESAC;

(* Calculate the final derived key and output to the address in RCX *)
TMP_OUTPUTKEY := derivekey(TMP_KEYDEPENDENCIES);
DS:RCX[15:0] := TMP_OUTPUTKEY;
RAX := 0;
RFLAGS.ZF := 0;

EXIT:
RFLAGS.CF := 0;
RFLAGS.PF := 0;
RFLAGS.AF := 0;
RFLAGS.OF := 0;
RFLAGS.SF := 0;
```

Flags Affected

ZF is cleared if successful, otherwise ZF is set. CF, PF, AF, OF, SF are cleared.

Protected Mode Exceptions

#GP(0)	If executed outside an enclave.
	If a memory operand effective address is outside the current enclave.
	If an effective address is not properly aligned.
	If an effective address is outside the DS segment limit.
	If KEYREQUEST format is invalid.
#PF(error code)	If a page fault occurs in accessing memory.

64-Bit Mode Exceptions

#GP(0)	If executed outside an enclave.
	If a memory operand effective address is outside the current enclave.
	If an effective address is not properly aligned.
	If an effective address is not canonical.
	If KEYREQUEST format is invalid.
#PF(error code)	If a page fault occurs in accessing memory operands.

EMODPE—Extend an EPC Page Permissions

Opcode/ Instruction	Op/En	64/32 bit Mode Support	CPUID Feature Flag	Description
EAX = 06H ENCLU[EMODPE]	IR	V/V	SGX2	This leaf function extends the access rights of an existing EPC page.

Instruction Operand Encoding

Op/En	EAX	RBX	RCX
IR	EMODPE (In)	Address of a SECINFO (In)	Address of the destination EPC page (In)

Description

This leaf function extends the access rights associated with an existing EPC page in the running enclave. THE RWX bits of the SECINFO parameter are treated as a permissions mask; supplying a value that does not extend the page permissions will have no effect. This instruction leaf can only be executed when inside the enclave.

RBX contains the effective address of a SECINFO structure while RCX contains the effective address of an EPC page. The table below provides additional information on the memory parameter of the EMODPE leaf function.

EMODPE Memory Parameter Semantics

SECINFO	EPCPAGE
Read access permitted by Non Enclave	Read access permitted by Enclave

The instruction faults if any of the following:

EMODPE Faulting Conditions

The operands are not properly aligned.	If security attributes of the SECINFO page make the page inaccessible.
The EPC page is locked by another thread.	RBX does not contain an effective address in an EPC page in the running enclave.
The EPC page is not valid.	RCX does not contain an effective address of an EPC page in the running enclave.
SECINFO contains an invalid request.	

Concurrency Restrictions

Table 38-68. Base Concurrency Restrictions of EMODPE

Leaf	Parameter	Base Concurrency Restrictions		
		Access	On Conflict	SGX_CONFLICT VM Exit Qualification
EMODPE	Target [DS:RCX]	Concurrent		
	SECINFO [DS:RBX]	Concurrent		

Table 38-69. Additional Concurrency Restrictions of EMODPE

Leaf	Parameter	Additional Concurrency Restrictions					
		vs. EACCEPT, EACCEPTCOPY, EMODPE, EMODPR, EMODT		vs. EADD, EEXTEND, EINIT		vs. ETRACK, ETRACKC	
		Access	On Conflict	Access	On Conflict	Access	On Conflict
EMODPE	Target [DS:RCX]	Exclusive	#GP	Concurrent		Concurrent	
	SECINFO [DS:RBX]	Concurrent		Concurrent		Concurrent	

Operation

Temp Variables in EMODPE Operational Flow

Name	Type	Size (bits)	Description
SCRATCH_SECINFO	SECINFO	512	Scratch storage for holding the contents of DS:RBX.

```
IF (DS:RBX is not 64Byte Aligned)
    THEN #GP(0); FI;

IF (DS:RCX is not 4KByte Aligned)
    THEN #GP(0); FI;

IF ((DS:RBX is not within CR_ELRANGE) or (DS:RCX is not within CR_ELRANGE) )
    THEN #GP(0); FI;

IF (DS:RBX does not resolve within an EPC)
    THEN #PF(DS:RBX); FI;

IF (DS:RCX does not resolve within an EPC)
    THEN #PF(DS:RCX); FI;

IF ( (EPCM(DS:RBX).VALID = 0) or (EPCM(DS:RBX).R = 0) or (EPCM(DS:RBX).PENDING ≠ 0) or (EPCM(DS:RBX).MODIFIED ≠ 0) or
    (EPCM(DS:RBX).BLOCKED ≠ 0) or (EPCM(DS:RBX).PT ≠ PT_REG) or (EPCM(DS:RBX).ENCLAVESECS ≠ CR_ACTIVE_SECS) or
    (EPCM(DS:RBX).ENCLAVEADDRESS ≠ (DS:RBX & ~0xFFF)) )
    THEN #PF(DS:RBX); FI;

SCRATCH_SECINFO := DS:RBX;

(* Check for misconfigured SECINFO flags*)
IF (SCRATCH_SECINFO reserved fields are not zero )
    THEN #GP(0); FI;

(* Check security attributes of the EPC page *)
IF ( (EPCM(DS:RCX).VALID = 0) or (EPCM(DS:RCX).PENDING ≠ 0) or (EPCM(DS:RCX).MODIFIED ≠ 0) or
    (EPCM(DS:RCX).BLOCKED ≠ 0) or (EPCM(DS:RCX).PT ≠ PT_REG) or (EPCM(DS:RCX).ENCLAVESECS ≠ CR_ACTIVE_SECS) )
    THEN #PF(DS:RCX); FI;

(* Check the EPC page for concurrency *)
IF (EPC page in use by another SGX2 instruction)
    THEN #GP(0); FI;

(* Re-Check security attributes of the EPC page *)
IF ( (EPCM(DS:RCX).VALID = 0) or (EPCM(DS:RCX).PENDING ≠ 0) or (EPCM(DS:RCX).MODIFIED ≠ 0) or
    (EPCM(DS:RCX).PT ≠ PT_REG) or (EPCM(DS:RCX).ENCLAVESECS ≠ CR_ACTIVE_SECS) or
    (EPCM(DS:RCX).ENCLAVEADDRESS ≠ DS:RCX))
    THEN #PF(DS:RCX); FI;

(* Check for misconfigured SECINFO flags*)
IF ( (EPCM(DS:RCX).R = 0) and (SCRATCH_SECINFO.FLAGS.R = 0) and (SCRATCH_SECINFO.FLAGS.W ≠ 0) )
    THEN #GP(0); FI;
```

```
(* Update EPCM permissions *)
EPCM(DS:RCX).R := EPCM(DS:RCX).R | SCRATCH_SECINFO.FLAGS.R;
EPCM(DS:RCX).W := EPCM(DS:RCX).W | SCRATCH_SECINFO.FLAGS.W;
EPCM(DS:RCX).X := EPCM(DS:RCX).X | SCRATCH_SECINFO.FLAGS.X;
```

Flags Affected

None

Protected Mode Exceptions

#GP(0)	If executed outside an enclave.
	If a memory operand effective address is outside the DS segment limit.
	If a memory operand is not properly aligned.
	If a memory operand is locked.
#PF(error code)	If a page fault occurs in accessing memory operands.

64-Bit Mode Exceptions

#GP(0)	If executed outside an enclave.
	If a memory operand is non-canonical form.
	If a memory operand is not properly aligned.
	If a memory operand is locked.
#PF(error code)	If a page fault occurs in accessing memory operands.

EREPORT—Create a Cryptographic Report of the Enclave

Opcode/ Instruction	Op/En	64/32 bit Mode Support	CPUID Feature Flag	Description
EAX = 00H ENCLU[EREPORT]	IR	V/V	SGX1	This leaf function creates a cryptographic report of the enclave.

Instruction Operand Encoding

Op/En	EAX	RBX	RCX	RDX
IR	EREPORT (In)	Address of TARGETINFO (In)	Address of REPORTDATA (In)	Address where the REPORT is written to in an OUTPUTDATA (In)

Description

This leaf function creates a cryptographic REPORT that describes the contents of the enclave. This instruction leaf can only be executed when inside the enclave. The cryptographic report can be used by other enclaves to determine that the enclave is running on the same platform.

RBX contains the effective address of the MRENCLAVE value of the enclave that will authenticate the REPORT output, using the REPORT key delivered by EGETKEY command for that enclave. RCX contains the effective address of a 64-byte REPORTDATA structure, which allows the caller of the instruction to associate data with the enclave from which the instruction is called. RDX contains the address where the REPORT will be output by the instruction.

EREPORT Memory Parameter Semantics

TARGETINFO	REPORTDATA	OUTPUTDATA
Read access by Enclave	Read access by Enclave	Read/Write access by Enclave

This instruction leaf perform the following:

1. Validate the 3 operands (RBX, RCX, RDX) are inside the enclave.
2. Compute a report key for the target enclave, as indicated by the value located in RBX(TARGETINFO).
3. Assemble the enclave SECS data to complete the REPORT structure (including the data provided using the RCX (REPORTDATA) operand).
4. Computes a cryptographic hash over REPORT structure.
5. Add the computed hash to the REPORT structure.
6. Output the completed REPORT structure to the address in RDX (OUTPUTDATA).

The instruction fails if the operands are not properly aligned.

CR_REPORT_KEYID, used to provide key wearout protection, is populated with a statistically unique value on boot of the platform by a trusted entity within the SGX TCB.

The instruction faults if any of the following:

EREPORT Faulting Conditions

An effective address not properly aligned.	An memory address does not resolve in an EPC page.
If accessing an invalid EPC page.	If the EPC page is blocked.
May page fault.	

Concurrency Restrictions

Table 38-70. Base Concurrency Restrictions of EREPORT

Leaf	Parameter	Base Concurrency Restrictions		
		Access	On Conflict	SGX_CONFLICT VM Exit Qualification
EREPORT	TARGETINFO [DS:RBX]	Concurrent		
	REPORTDATA [DS:RCX]	Concurrent		
	OUTPUTDATA [DS:RDX]	Concurrent		

Table 38-71. Additional Concurrency Restrictions of EREPORT

Leaf	Parameter	Additional Concurrency Restrictions					
		vs. EACCEPT, EACCEPTCOPY, EMODPE, EMODPR, EMODT		vs. EADD, EEXTEND, EINIT		vs. ETRACK, ETRACKC	
		Access	On Conflict	Access	On Conflict	Access	On Conflict
EREPORT	TARGETINFO [DS:RBX]	Concurrent		Concurrent		Concurrent	
	REPORTDATA [DS:RCX]	Concurrent		Concurrent		Concurrent	
	OUTPUTDATA [DS:RDX]	Concurrent		Concurrent		Concurrent	

Operation

Temp Variables in EREPORT Operational Flow

Name	Type	Size (bits)	Description
TMP_ATTRIBUTES		32	Physical address of SECS of the enclave to which source operand belongs.
TMP_CURRENTSECS			Address of the SECS for the currently executing enclave.
TMP_KEYDEPENDENCIES			Temp space for key derivation.
TMP_REPORTKEY		128	REPORTKEY generated by the instruction.
TMP_REPORT		3712	

```
TMP_MODE64 := ((IA32_EFER.LMA = 1) && (CS.L = 1));

(* Address verification for TARGETINFO (RBX) *)
IF ( (DS:RBX is not 512Byte Aligned) or (DS:RBX is not within CR_ELRANGE) )
    THEN #GP(0); FI;

IF (DS:RBX does not resolve within an EPC)
    THEN #PF(DS:RBX); FI;

IF (EPCM(DS:RBX).VALID = 0)
    THEN #PF(DS:RBX); FI;

IF (EPCM(DS:RBX).BLOCKED = 1)
    THEN #PF(DS:RBX); FI;

(* Check page parameters for correctness *)
IF ( (EPCM(DS:RBX).PT ≠ PT_REG) or (EPCM(DS:RBX).ENCLAVESECS ≠ CR_ACTIVE_SECS) or (EPCM(DS:RBX).PENDING = 1) or
    (EPCM(DS:RBX).MODIFIED = 1) or (EPCM(DS:RBX).ENCLAVEADDRESS ≠ (DS:RBX & ~0FFFH) ) or (EPCM(DS:RBX).R = 0) )
```

```
    THEN #PF(DS:RBX);
FI;

(* Verify RESERVED spaces in TARGETINFO are valid *)
IF (DS:RBX.RESERVED != 0)
    THEN #GP(0); FI;

(* Address verification for REPORTDATA (RCX) *)
IF ( (DS:RCX is not 128Byte Aligned) or (DS:RCX is not within CR_ELRANGE) )
    THEN #GP(0); FI;

IF (DS:RCX does not resolve within an EPC)
    THEN #PF(DS:RCX); FI;

IF (EPCM(DS:RCX).VALID = 0)
    THEN #PF(DS:RCX); FI;

IF (EPCM(DS:RCX).BLOCKED = 1)
    THEN #PF(DS:RCX); FI;

(* Check page parameters for correctness *)
IF ( (EPCM(DS:RCX).PT ≠ PT_REG) or (EPCM(DS:RCX).ENCLAVESECS ≠ CR_ACTIVE_SECS) or (EPCM(DS:RCX).PENDING = 1) or
    (EPCM(DS:RCX).MODIFIED = 1) or (EPCM(DS:RCX).ENCLAVEADDRESS ≠ (DS:RCX & ~0FFFH) ) or (EPCM(DS:RCX).R = 0) )
    THEN #PF(DS:RCX);
FI;

(* Address verification for OUTPUTDATA (RDX) *)
IF ( (DS:RDX is not 512Byte Aligned) or (DS:RDX is not within CR_ELRANGE) )
    THEN #GP(0); FI;

IF (DS:RDX does not resolve within an EPC)
    THEN #PF(DS:RDX); FI;

IF (EPCM(DS:RDX).VALID = 0)
    THEN #PF(DS:RDX); FI;

IF (EPCM(DS:RDX).BLOCKED = 1)
    THEN #PF(DS:RDX); FI;

(* Check page parameters for correctness *)
IF ( (EPCM(DS:RDX).PT ≠ PT_REG) or (EPCM(DS:RDX).ENCLAVESECS ≠ CR_ACTIVE_SECS) or (EPCM(DS:RCX).PENDING = 1) or
    (EPCM(DS:RCX).MODIFIED = 1) or (EPCM(DS:RDX).ENCLAVEADDRESS ≠ (DS:RDX & ~0FFFH) ) or (EPCM(DS:RDX).W = 0) )
    THEN #PF(DS:RDX);
FI;

(* REPORT MAC needs to be computed over data which cannot be modified *)
TMP_REPORT.CPUSVN := CR_CPUSVN;
TMP_REPORT.ISVFAMILYID := TMP_CURRENTSECS.ISVFAMILYID;
TMP_REPORT.ISVEXTPRODID := TMP_CURRENTSECS.ISVEXTPRODID;
TMP_REPORT.ISVPRODID := TMP_CURRENTSECS.ISVPRODID;
TMP_REPORT.ISVSVN := TMP_CURRENTSECS.ISVSVN;
TMP_REPORT.ATTRIBUTES := TMP_CURRENTSECS.ATTRIBUTES;
TMP_REPORT.REPORTDATA := DS:RCX[511:0];
TMP_REPORT.MRENCLAVE := TMP_CURRENTSECS.MRENCLAVE;
```

```
TMP_REPORT.MRSIGNER := TMP_CURRENTSECS.MRSIGNER;
TMP_REPORT.MRRESERVED := 0;
TMP_REPORT.KEYID[255:0] := CR_REPORT_KEYID;
TMP_REPORT.MISCSELECT := TMP_CURRENTSECS.MISCSELECT;
TMP_REPORT.CONFIGID := TMP_CURRENTSECS.CONFIGID;
TMP_REPORT.CONFIGSVN := TMP_CURRENTSECS.CONFIGSVN;
IF (CPUID.(EAX=12H, ECX=1):EAX[6] = 1)
    THEN TMP_REPORT.CET_ATTRIBUTES := TMP_CURRENTSECS.CET_ATTRIBUTES; FI;

(* Derive the report key *)
TMP_KEYDEPENDENCIES.KEYNAME := REPORT_KEY;
TMP_KEYDEPENDENCIES.ISVFAMILYID := 0;
TMP_KEYDEPENDENCIES.ISVEXTPRODID := 0;
TMP_KEYDEPENDENCIES.ISVPRODID := 0;
TMP_KEYDEPENDENCIES.ISVSVN := 0;
TMP_KEYDEPENDENCIES.SGXOWNEREPOCH := CR_SGXOWNEREPOCH;
TMP_KEYDEPENDENCIES.ATTRIBUTES := DS:RBX.ATTRIBUTES;
TMP_KEYDEPENDENCIES.ATTRIBUTESMASK := 0;
TMP_KEYDEPENDENCIES.MRENCLAVE := DS:RBX.MEASUREMENT;
TMP_KEYDEPENDENCIES.MRSIGNER := 0;
TMP_KEYDEPENDENCIES.KEYID := TMP_REPORT.KEYID;
TMP_KEYDEPENDENCIES.SEAL_KEY_FUSES := CR_SEAL_FUSES;
TMP_KEYDEPENDENCIES.CPUSVN := CR_CPUSVN;
TMP_KEYDEPENDENCIES.PADDING := TMP_CURRENTSECS.PADDING;
TMP_KEYDEPENDENCIES.MISCSELECT := DS:RBX.MISCSELECT;
TMP_KEYDEPENDENCIES.MISCMASK := 0;
TMP_KEYDEPENDENCIES.KEYPOLICY := 0;
TMP_KEYDEPENDENCIES.CONFIGID := DS:RBX.CONFIGID;
TMP_KEYDEPENDENCIES.CONFIGSVN := DS:RBX.CONFIGSVN;
IF (CPUID.(EAX=12H, ECX=1):EAX[6] = 1)
    THEN
        TMP_KEYDEPENDENCIES.CET_ATTRIBUTES := DS:RBX.CET_ATTRIBUTES;
        TMP_KEYDEPENDENCIES.CET_ATTRIBUTES _MASK := 0;
FI;

(* Calculate the derived key*)
TMP_REPORTKEY := derivekey(TMP_KEYDEPENDENCIES);

(* call cryptographic CMAC function, CMAC data are not including MAC&KEYID *)
TMP_REPORT.MAC := cmac(TMP_REPORTKEY, TMP_REPORT[3071:0] );
DS:RDX[3455: 0] := TMP_REPORT;
```

Flags Affected

None

Protected Mode Exceptions

#GP(0)	If executed outside an enclave.
	If the address in RCS is outside the DS segment limit.
	If a memory operand is not properly aligned.
	If a memory operand is not in the current enclave.
#PF(error code)	If a page fault occurs in accessing memory operands.

64-Bit Mode Exceptions

#GP(0)	If executed outside an enclave.
	If RCX is non-canonical form.
	If a memory operand is not properly aligned.
	If a memory operand is not in the current enclave.
#PF(error code)	If a page fault occurs in accessing memory operands.

ERESUME—Re-Enters an Enclave

Opcode/ Instruction	Op/En	64/32 bit Mode Support	CPUID Feature Flag	Description
EAX = 03H ENCLU[ERESUME]	IR	V/V	SGX1	This leaf function is used to re-enter an enclave after an interrupt.

Instruction Operand Encoding

Op/En	RAX	RBX	RCX
IR	ERESUME (In)	Address of a TCS (In)	Address of AEP (In)

Description

The ENCLU[ERESUME] instruction resumes execution of an enclave that was interrupted due to an exception or interrupt, using the machine state previously stored in the SSA.

ERESUME Memory Parameter Semantics

TCS
Enclave read/write access

The instruction faults if any of the following occurs:

Address in RBX is not properly aligned.	Any TCS.FLAGS's must-be-zero bit is not zero.
TCS pointed to by RBX is not valid or available or locked.	Current 32/64 mode does not match the enclave mode in SECS.ATTRIBUTES.MODE64.
The SECS is in use by another enclave.	Either of TCS-specified FS and GS segment is not a subset of the current DS segment.
Any one of DS, ES, CS, SS is not zero.	If XSAVE available, CR4.OSXSAVE = 0, but SECS.ATTRIBUTES.XFRM ≠ 3.
CR4.OSFXSR ≠ 1.	If CR4.OSXSAVE = 1, SECS.ATTRIBUTES.XFRM is not a subset of XCR0.
Offsets 520-535 of the XSAVE area not 0.	The bit vector stored at offset 512 of the XSAVE area must be a subset of SECS.ATTRIBUTES.XFRM.
The SSA frame is not valid or in use.	

The following operations are performed by ERESUME:

- RSP and RBP are saved in the current SSA frame on EENTER and are automatically restored on EEXIT or an asynchronous exit due to any Interrupt event.
- The AEP contained in RCX is stored into the TCS for use by AEXs.FS and GS (including hidden portions) are saved and new values are constructed using TCS.OFSBASE/GSBASE (32 and 64-bit mode) and TCS.OFSLIMIT/GSLIMIT (32-bit mode only). The resulting segments must be a subset of the DS segment.
- If CR4.OSXSAVE == 1, XCR0 is saved and replaced by SECS.ATTRIBUTES.XFRM. The effect of RFLAGS.TF depends on whether the enclave entry is opt-in or opt-out (see Section 40.1.2):
  - — On opt-out entry, TF is saved and cleared (it is restored on EEXIT or AEX). Any attempt to set TF via a POPF instruction while inside the enclave clears TF (see Section 40.2.5).
  - — On opt-in entry, a single-step debug exception is pended on the instruction boundary immediately after EENTER (see Section 40.2.3).
- All code breakpoints that do not overlap with ELRANGE are also suppressed. If the entry is an opt-out entry, all code and data breakpoints that overlap with the ELRANGE are suppressed.

- On opt-out entry, a number of performance monitoring counters and behaviors are modified or suppressed (see Section 40.2.3):
  - All performance monitoring activity on the current thread is suppressed except for incrementing and firing of FIXED_CTR1 and FIXED_CTR2.
  - PEBS is suppressed.
  - AnyThread counting on other threads is demoted to MyThread mode and IA32_PERF_GLOBAL_STATUS[60] on that thread is set.
  - If the opt-out entry on a hardware thread results in suppression of any performance monitoring, then the processor sets IA32_PERF_GLOBAL_STATUS[60] and IA32_PERF_GLOBAL_STATUS[63].

Concurrency Restrictions

Table 38-72. Base Concurrency Restrictions of ERESUME

Leaf	Parameter	Base Concurrency Restrictions		
		Access	On Conflict	SGX_CONFLICT VM Exit Qualification
ERESUME	TCS [DS:RBX]	Shared	#GP	

Table 38-73. Additional Concurrency Restrictions of ERESUME

Leaf	Parameter	Additional Concurrency Restrictions					
		vs. EACCEPT, EACCEPTCOPY, EMODPE, EMODPR, EMODT		vs. EADD, EEXTEND, EINIT		vs. ETRACK, ETRACKC	
		Access	On Conflict	Access	On Conflict	Access	On Conflict
ERESUME	TCS [DS:RBX]	Concurrent		Concurrent		Concurrent	

Operation

Temp Variables in ERESUME Operational Flow

Name	Type	Size	Description
TMP_FSBASE	Effective Address	32/64	Proposed base address for FS segment.
TMP_GSBASE	Effective Address	32/64	Proposed base address for FS segment.
TMP_FSLIMIT	Effective Address	32/64	Highest legal address in proposed FS segment.
TMP_GSLIMIT	Effective Address	32/64	Highest legal address in proposed GS segment.
TMP_TARGET	Effective Address	32/64	Address of first instruction inside enclave at which execution is to resume.
TMP_SECS	Effective Address	32/64	Physical address of SECS for this enclave.
TMP_SSA	Effective Address	32/64	Address of current SSA frame.
TMP_XSIZE	integer	64	Size of XSAVE area based on SECS.ATTRIBUTES.XFRM.
TMP_SSA_PAGE	Effective Address	32/64	Pointer used to iterate over the SSA pages in the current frame.
TMP_GPR	Effective Address	32/64	Address of the GPR area within the current SSA frame.
TMP_BRANCH_RECORD	LBR Record		From/to addresses to be pushed onto the LBR stack.

```
TMP_MODE64 := ((IA32_EFER.LMA = 1) && (CS.L = 1));

(* Make sure DS is usable, expand up *)
IF (TMP_MODE64 = 0 and (DS not usable or ( ( DS[S] = 1) and (DS[bit 11] = 0) and DS[bit 10] = 1) ) )
    THEN #GP(0); FI;
```

```
(* Check that CS, SS, DS, ES.base is 0 *)
IF (TMP_MODE64 = 0)
    THEN
        IF(CS.base ≠ 0 or DS.base ≠ 0) #GP(0); FI;
        IF(ES usable and ES.base ≠ 0) #GP(0); FI;
        IF(SS usable and SS.base ≠ 0) #GP(0); FI;
        IF(SS usable and SS.B = 0) #GP(0); FI;
FI;

IF (DS:RBX is not 4KByte Aligned)
    THEN #GP(0); FI;

IF (DS:RBX does not resolve within an EPC)
    THEN #PF(DS:RBX); FI;

(* Check AEP is canonical*)
IF (TMP_MODE64 = 1 and (CS:RCX is not canonical) )
    THEN #GP(0); FI;

(* Check concurrency of TCS operation*)
IF (Other Intel SGX instructions is operating on TCS)
    THEN #GP(0); FI;

(* TCS verification *)
IF (EPCM(DS:RBX).VALID = 0)
    THEN #PF(DS:RBX); FI;

IF (EPCM(DS:RBX).BLOCKED = 1)
    THEN #PF(DS:RBX); FI;

IF ((EPCM(DS:RBX).PENDING = 1) or (EPCM(DS:RBX).MODIFIED = 1))
    THEN #PF(DS:RBX); FI;

IF ( (EPCM(DS:RBX).ENCLAVEADDRESS ≠ DS:RBX) or (EPCM(DS:RBX).PT ≠ PT_TCS) )
    THEN #PF(DS:RBX); FI;

IF ( (DS:RBX).OSSA is not 4KByte Aligned)
    THEN #GP(0); FI;

(* Check proposed FS and GS *)
IF ( ( (DS:RBX).OFSBASE is not 4KByte Aligned) or ( (DS:RBX).OGSBASE is not 4KByte Aligned) )
    THEN #GP(0); FI;

(* Get the SECS for the enclave in which the TCS resides *)
TMP_SECS := Address of SECS for TCS;

(* Make sure that the FLAGS field in the TCS does not have any reserved bits set *)
IF ( ( (DS:RBX).FLAGS & FFFFFFFFFFFFFFFEH) ≠ 0)
    THEN #GP(0); FI;

(* SECS must exist and enclave must have previously been EINITted *)
IF (the enclave is not already initialized)
    THEN #GP(0); FI;
```

```
(* make sure the logical processor's operating mode matches the enclave *)
IF ( (TMP_MODE64 ≠ TMP_SECS.ATTRIBUTES.MODE64BIT) )
    THEN #GP(0); FI;

IF (CR4.OSFXSR = 0)
    THEN #GP(0); FI;

(* Check for legal values of SECS.ATTRIBUTES.XFRM *)
IF (CR4.OSXSAVE = 0)
    THEN
        IF (TMP_SECS.ATTRIBUTES.XFRM ≠ 03H) THEN #GP(0); FI;
    ELSE
        IF ( (TMP_SECS.ATTRIBUTES.XFRM & XCR0) ≠ TMP_SECS.ATTRIBUTES.XFRM) THEN #GP(0); FI;
FI;

(* Make sure the SSA contains at least one active frame *)
IF ( (DS:RBX).CSSA = 0)
    THEN #GP(0); FI;

(* Compute linear address of SSA frame *)
TMP_SSA := (DS:RBX).OSSA + TMP_SECS.BASEADDR + 4096 * TMP_SECS.SSAFRAMESIZE * ( (DS:RBX).CSSA - 1);
TMP_XSIZE := compute_XSAVE_frame_size(TMP_SECS.ATTRIBUTES.XFRM);

FOR EACH TMP_SSA_PAGE = TMP_SSA to TMP_SSA + TMP_XSIZE
    (* Check page is read/write accessible *)
    Check that DS:TMP_SSA_PAGE is read/write accessible;
    If a fault occurs, release locks, abort, and deliver that fault;
    IF (DS:TMP_SSA_PAGE does not resolve to EPC page)
        THEN #PF(DS:TMP_SSA_PAGE); FI;
    IF (EPCM(DS:TMP_SSA_PAGE).VALID = 0)
        THEN #PF(DS:TMP_SSA_PAGE); FI;
    IF (EPCM(DS:TMP_SSA_PAGE).BLOCKED = 1)
        THEN #PF(DS:TMP_SSA_PAGE); FI;
    IF ((EPCM(DS:TMP_SSA_PAGE).PENDING = 1) or (EPCM(DS:TMP_SSA_PAGE_.MODIFIED = 1))
        THEN #PF(DS:TMP_SSA_PAGE); FI;
    IF ( ( EPCM(DS:TMP_SSA_PAGE).ENCLAVEADDRESS ≠ DS:TMPSSA_PAGE) or (EPCM(DS:TMP_SSA_PAGE).PT ≠ PT_REG) or
        (EPCM(DS:TMP_SSA_PAGE).ENCLAVESECS ≠ EPCM(DS:RBX).ENCLAVESECS) or
        (EPCM(DS:TMP_SSA_PAGE).R = 0) or (EPCM(DS:TMP_SSA_PAGE).W = 0) )
        THEN #PF(DS:TMP_SSA_PAGE); FI;
    CR_XSAVE_PAGE_n := Physical_Address(DS:TMP_SSA_PAGE);
ENDFOR

(* Compute address of GPR area*)
TMP_GPR := TMP_SSA + 4096 * DS:TMP_SECS.SSAFRAMESIZE - sizeof(GPRSGX_AREA);
Check that DS:TMP_SSA_PAGE is read/write accessible;
If a fault occurs, release locks, abort, and deliver that fault;
IF (DS:TMP_GPR does not resolve to EPC page)
    THEN #PF(DS:TMP_GPR); FI;
IF (EPCM(DS:TMP_GPR).VALID = 0)
    THEN #PF(DS:TMP_GPR); FI;
IF (EPCM(DS:TMP_GPR).BLOCKED = 1)
    THEN #PF(DS:TMP_GPR); FI;
IF ((EPCM(DS:TMP_GPR).PENDING = 1) or (EPCM(DS:TMP_GPR).MODIFIED = 1))
    THEN #PF(DS:TMP_GPR); FI;
```

```
IF ( ( EPCM(DS:TMP_GPR).ENCLAVEADDRESS ≠ DS:TMP_GPR) or (EPCM(DS:TMP_GPR).PT ≠ PT_REG) or
    (EPCM(DS:TMP_GPR).ENCLAVESECS ≠ EPCM(DS:RBX).ENCLAVESECS) or
    (EPCM(DS:TMP_GPR).R = 0) or (EPCM(DS:TMP_GPR).W = 0) )
    THEN #PF(DS:TMP_GPR); FI;

IF (TMP_MODE64 = 0)
    THEN
        IF (TMP_GPR + (GPR_SIZE -1) is not in DS segment) THEN #GP(0); FI;
FI;

CR_GPR_PA := Physical_Address (DS: TMP_GPR);

TMP_TARGET := (DS:TMP_GPR).RIP;
IF (TMP_MODE64 = 1)
    THEN
        IF (TMP_TARGET is not canonical) THEN #GP(0); FI;
    ELSE
        IF (TMP_TARGET > CS limit) THEN #GP(0); FI;
FI;

(* Check proposed FS/GS segments fall within DS *)
IF (TMP_MODE64 = 0)
    THEN
        TMP_FSBASE := (DS:RBX).OFSBASE + TMP_SECS.BASEADDR;
        TMP_FSLIMIT := (DS:RBX).OFSBASE + TMP_SECS.BASEADDR + (DS:RBX).FSLIMIT;
        TMP_GSBASE := (DS:RBX).OGSBASE + TMP_SECS.BASEADDR;
        TMP_GSLIMIT := (DS:RBX).OGSBASE + TMP_SECS.BASEADDR + (DS:RBX).GSLIMIT;
        (* if FS wrap-around, make sure DS has no holes*)
        IF (TMP_FSLIMIT < TMP_FSBASE)
            THEN
                IF (DS.limit < 4GB) THEN #GP(0); FI;
            ELSE
                IF (TMP_FSLIMIT > DS.limit) THEN #GP(0); FI;
        FI;
        (* if GS wrap-around, make sure DS has no holes*)
        IF (TMP_GSLIMIT < TMP_GSBASE)
            THEN
                IF (DS.limit < 4GB) THEN #GP(0); FI;
            ELSE
                IF (TMP_GSLIMIT > DS.limit) THEN #GP(0); FI;
        FI;
    ELSE
        TMP_FSBASE := DS:TMP_GPR.FSBASE;
        TMP_GSBASE := DS:TMP_GPR.GSBASE;
        IF ( (TMP_FSBASE is not canonical) or (TMP_GSBASE is not canonical))
            THEN #GP(0); FI;
FI;

(* Ensure the enclave is not already active and this thread is the only one using the TCS*)
IF (DS:RBX.STATE = ACTIVE))
    THEN #GP(0); FI;

TMP_IA32_U_CET := 0
TMP_SSP := 0
```

```
IF (CPUID.(EAX=12H, ECX=1):EAX[6] = 1)
    THEN
        IF ( CR4.CET = 0 )
            THEN
                (* If part does not support CET or CET has not been enabled and enclave requires CET then fail *)
                IF ( TMP_SECS.CET_ATTRIBUTES ≠ 0 OR TMP_SECS.CET_LEG_BITMAP_OFFSET ≠ 0 ) #GP(0); FI;
        FI;
        (* If indirect branch tracking or shadow stacks enabled but CET state save area is not 16B aligned then fail ERESUME *)
        IF ( TMP_SECS.CET_ATTRIBUTES.SH_STK_EN = 1 OR TMP_SECS.CET_ATTRIBUTES.ENDBR_EN = 1 )
            THEN
                IF (DS:RBX.OCETSSA is not 16B aligned) #GP(0); FI;
        FI;

IF (TMP_SECS.CET_ATTRIBUTES.SH_STK_EN OR TMP_SECS.CET_ATTRIBUTES.ENDBR_EN)
    THEN
        (* Setup CET state from SECS, note tracker goes to IDLE *)
        TMP_IA32_U_CET = TMP_SECS.CET_ATTRIBUTES;
        IF (TMP_IA32_U_CET.LEG_IW_EN = 1 AND TMP_IA32_U_CET.ENDBR_EN = 1 )
            THEN
                TMP_IA32_U_CET := TMP_IA32_U_CET + TMP_SECS.BASEADDR;
                TMP_IA32_U_CET := TMP_IA32_U_CET + TMP_SECS.CET_LEG_BITMAP_BASE;
        FI;

        (* Compute linear address of what will become new CET state save area and cache its PA *)
        TMP_CET_SAVE_AREA = DS:RBX.OCETSSA + TMP_SECS.BASEADDR + (DS:RBX.CSSA - 1) * 16
        TMP_CET_SAVE_PAGE = TMP_CET_SAVE_AREA & ~0xFFF;

        Check the TMP_CET_SAVE_PAGE page is read/write accessible
        If fault occurs release locks, abort, and deliver fault

        (* read the EPCM VALID, PENDING, MODIFIED, BLOCKED, and PT fields atomically *)
        IF ((DS:TMP_CET_SAVE_PAGE Does NOT RESOLVE TO EPC PAGE) OR
         (EPCM(DS:TMP_CET_SAVE_PAGE).VALID = 0) OR
         (EPCM(DS:TMP_CET_SAVE_PAGE).PENDING = 1) OR
         (EPCM(DS:TMP_CET_SAVE_PAGE).MODIFIED = 1) OR
         (EPCM(DS:TMP_CET_SAVE_PAGE).BLOCKED = 1) OR
         (EPCM(DS:TMP_CET_SAVE_PAGE).R = 0) OR
         (EPCM(DS:TMP_CET_SAVE_PAGE).W = 0) OR
         (EPCM(DS:TMP_CET_SAVE_PAGE).ENCLAVEADDRESS ≠ DS:TMP_CET_SAVE_PAGE) OR
         (EPCM(DS:TMP_CET_SAVE_PAGE).PT ≠ PT_SS_REST) OR
         (EPCM(DS:TMP_CET_SAVE_PAGE).ENCLAVESECS ≠ EPCM(DS:RBX).ENCLAVESECS))
            THEN
                #PF(DS:TMP_CET_SAVE_PAGE);
        FI;

        CR_CET_SAVE_AREA_PA := Physical address(DS:TMP_CET_SAVE_AREA)

        TMP_SSP = CR_CET_SAVE_AREA_PA.SSP
        TMP_IA32_U_CET.TRACKER = CR_CET_SAVE_AREA_PA.TRACKER;
        TMP_IA32_U_CET.SUPPRESS = CR_CET_SAVE_AREA_PA.SUPPRESS;

        IF ( (TMP_MODE64 = 1 AND TMP_SSP is not canonical) OR
         (TMP_MODE64 = 0 AND (TMP_SSP & 0xFFFFFFFF00000000) ≠ 0) OR
```

```
            (TMP_SSP is not 4 byte aligned) OR
            (TMP_IA32_U_CET.TRACKER = WAIT_FOR_ENDBRANCH AND TMP_IA32_U_CET.SUPPRESS = 1) OR
            (CR_CET_SAVE_AREA_PA.Reserved ≠ 0) ) #GP(0); FI;
           FI;
FI;

(* SECS.ATTRIBUTES.XFRM selects the features to be saved. *)
(* CR_XSAVE_PAGE_n: A list of 1 or more physical address of pages that contain the XSAVE area. *)
XRSTOR(TMP_MODE64, SECS.ATTRIBUTES.XFRM, CR_XSAVE_PAGE_n);

IF (XRSTOR failed with #GP)
    THEN
        DS:RBX.STATE := INACTIVE;
        #GP(0);
FI;

CR_ENCLAVE_MODE := 1;
CR_ACTIVE_SECS := TMP_SECS;
CR_ELRANGE := (TMP_SECS.BASEADDR, TMP_SECS.SIZE);

(* Save sate for possible AEXs *)
CR_TCS_PA := Physical_Address (DS:RBX);
CR_TCS_LA := RBX;
CR_TCS_LA.AEP := RCX;

(* Save the hidden portions of FS and GS *)
CR_SAVE_FS_selector := FS.selector;
CR_SAVE_FS_base := FS.base;
CR_SAVE_FS_limit := FS.limit;
CR_SAVE_FS_access_rights := FS.access_rights;
CR_SAVE_GS_selector := GS.selector;
CR_SAVE_GS_base := GS.base;
CR_SAVE_GS_limit := GS.limit;
CR_SAVE_GS_access_rights := GS.access_rights;

RIP := TMP_TARGET;

Restore_GPRs from DS:TMP_GPR;

(*Restore the RFLAGS values from SSA*)
RFLAGS.CF := DS:TMP_GPR.RFLAGS.CF;
RFLAGS.PF := DS:TMP_GPR.RFLAGS.PF;
RFLAGS.AF := DS:TMP_GPR.RFLAGS.AF;
RFLAGS.ZF := DS:TMP_GPR.RFLAGS.ZF;
RFLAGS.SF := DS:TMP_GPR.RFLAGS.SF;
RFLAGS.DF := DS:TMP_GPR.RFLAGS.DF;
RFLAGS.OF := DS:TMP_GPR.RFLAGS.OF;
RFLAGS.NT := DS:TMP_GPR.RFLAGS.NT;
RFLAGS.AC := DS:TMP_GPR.RFLAGS.AC;
RFLAGS.ID := DS:TMP_GPR.RFLAGS.ID;
RFLAGS.RF := DS:TMP_GPR.RFLAGS.RF;
RFLAGS.VM := 0;
IF (RFLAGS.IOPL = 3)
    THEN RFLAGS.IF := DS:TMP_GPR.RFLAGS.IF; FI;
```

```
IF (TCS.FLAGS.OPTIN = 0)
    THEN RFLAGS.TF := 0; FI;

(* If XSAVE is enabled, save XCR0 and replace it with SECS.ATTRIBUTES.XFRM*)
IF (CR4.OSXSAVE = 1)
    CR_SAVE_XCR0 := XCR0;
    XCR0 := TMP_SECS.ATTRIBUTES.XFRM;
FI;

(* Pop the SSA stack*)
(DS:RBX).CSSA := (DS:RBX).CSSA -1;

(* Do the FS/GS swap *)
FS.base := TMP_FSBASE;
FS.limit := DS:RBX.FSLIMIT;
FS.type := 0001b;
FS.W := DS.W;
FS.S := 1;
FS.DPL := DS.DPL;
FS.G := 1;
FS.B := 1;
FS.P := 1;
FS.AVL := DS.AVL;
FS.L := DS.L;
FS.unusable := 0;
FS.selector := 0BH;

GS.base := TMP_GSBASE;
GS.limit := DS:RBX.GSLIMIT;
GS.type := 0001b;
GS.W := DS.W;
GS.S := 1;
GS.DPL := DS.DPL;
GS.G := 1;
GS.B := 1;
GS.P := 1;
GS.AVL := DS.AVL;
GS.L := DS.L;
GS.unusable := 0;
GS.selector := 0BH;

CR_DBGOPTIN := TCS.FLAGS.DBGOPTIN;
Suppress all code breakpoints that are outside ELRANGE;

IF (CR_DBGOPTIN = 0)
    THEN
        Suppress all code breakpoints that overlap with ELRANGE;
        CR_SAVE_TF := RFLAGS.TF;
        RFLAGS.TF := 0;
        Suppress any MTF VM exits during execution of the enclave;
        Clear all pending debug exceptions;
        Clear any pending MTF VM exit;
    ELSE
```

```
        Clear all pending debug exceptions;
        Clear pending MTF VM exits;
FI;

IF ((CPUID.(EAX=7H, ECX=0):EDX[CET_IBT] = 1) OR (CPUID.(EAX=7, ECX=0):ECX[CET_SS] = 1)
    THEN
        (* Save enclosing application CET state into save registers *)
        CR_SAVE_IA32_U_CET := IA32_U_CET
        (* Setup enclave CET state *)
        IF CPUID.(EAX=07H, ECX=00h):ECX[CET_SS] = 1
            THEN
                CR_SAVE_SSP := SSP
                SSP := TMP_SSP;
        FI;
        IA32_U_CET := TMP_IA32_U_CET;
FI;

(* Assure consistent translations *)
Flush_linear_context;
Clear_Monitor_FSM;
Allow_front_end_to_begin_fetch_at_new_RIP;
```

Flags Affected

RFLAGS.TF is cleared on opt-out entry

Protected Mode Exceptions

#GP(0)	If DS:RBX is not page aligned.
	If the enclave is not initialized.
	If the thread is not in the INACTIVE state.
	If CS, DS, ES or SS bases are not all zero.
	If executed in enclave mode.
	If part or all of the FS or GS segment specified by TCS is outside the DS segment.
	If any reserved field in the TCS FLAG is set.
	If the target address is not within the CS segment.
	If CR4.OSFXSR = 0.
	If CR4.OSXSAVE = 0 and SECS.ATTRIBUTES.XFRM ≠ 3.
	If CR4.OSXSAVE = 1and SECS.ATTRIBUTES.XFRM is not a subset of XCR0.
#PF(error code)	If a page fault occurs in accessing memory.
	If DS:RBX does not point to a valid TCS.
	If one or more pages of the current SSA frame are not readable/writable, or do not resolve to a valid PT_REG EPC page.

64-Bit Mode Exceptions

#GP(0)	If DS:RBX is not page aligned.
	If the enclave is not initialized.
	If the thread is not in the INACTIVE state.
	If CS, DS, ES or SS bases are not all zero.
	If executed in enclave mode.
	If part or all of the FS or GS segment specified by TCS is outside the DS segment.
	If any reserved field in the TCS FLAG is set.

	If the target address is not canonical.
	If CR4.OSFXSR = 0.
	If CR4.OSXSAVE = 0 and SECS.ATTRIBUTES.XFRM ≠ 3.
	If CR4.OSXSAVE = 1and SECS.ATTRIBUTES.XFRM is not a subset of XCR0.
#PF(error code)	If a page fault occurs in accessing memory operands.
	If DS:RBX does not point to a valid TCS.
	If one or more pages of the current SSA frame are not readable/writable, or do not resolve to a valid PT_REG EPC page.

38.5 INTEL® SGX VIRTUALIZATION LEAF FUNCTION REFERENCE

Leaf functions available with the ENCLV instruction mnemonic are covered in this section. In general, each instruction leaf requires EAX to specify the leaf function index and/or additional implicit registers specifying leaf-specific input parameters. An instruction operand encoding table provides details of each implicit register usage and associated input/output semantics.

In many cases, an input parameter specifies an effective address associated with a memory object inside or outside the EPC, the memory addressing semantics of these memory objects are also summarized in a separate table.

EDECVIRTCHILD—Decrement VIRTCHILDCNT in SECS

Opcode/ Instruction	Op/En	64/32 bit Mode Support	CPUID Feature Flag	Description
EAX = 00H ENCLV[EDECVIRTCHILD]	IR	V/V	EAX[5]	This leaf function decrements the SECS VIRTCHILDCNT field.

Instruction Operand Encoding

Op/En	EAX		RBX	RCX
IR	EDECVIRTCHILD (In)	Return error code (Out)	Address of an enclave page (In)	Address of an SECS page (In)

Description

This instruction decrements the SECS VIRTCHILDCNT field. This instruction can only be executed when current privilege level is 0.

The content of RCX is an effective address of an EPC page. The DS segment is used to create linear address. Segment override is not supported.

EDECVIRTCHILD Memory Parameter Semantics

EPCPAGE	SECS
Read/Write access permitted by Non Enclave	Read access permitted by Enclave

The instruction faults if any of the following:

EDECVIRTCHILD Faulting Conditions

A memory operand effective address is outside the DS segment limit (32b mode).	A page fault occurs in accessing memory operands.
DS segment is unusable (32b mode).	RBX does not refer to an enclave page (REG, TCS, TRIM, SECS).
A memory address is in a non-canonical form (64b mode).	RCX does not refer to an SECS page.
A memory operand is not properly aligned.	RBX does not refer to an enclave page associated with SECS referenced in RCX.

Concurrency Restrictions

Table 38-74. Base Concurrency Restrictions of EDECVIRTCHILD

Leaf	Parameter	Base Concurrency Restrictions		
		Access	On Conflict	SGX_CONFLICT VM Exit Qualification
EDECVIRTCHILD	Target [DS:RBX]	Shared	SGX_EPC_PAGE_ CONFLICT	
	SECS [DS:RCX]	Concurrent		

Table 38-75. Additional Concurrency Restrictions of EDECVIRTCHILD

Leaf	Parameter	Additional Concurrency Restrictions					
		vs. EACCEPT, EACCEPTCOPY, EMODPE, EMODPR, EMODT		vs. EADD, EEXTEND, EINIT		vs. ETRACK, ETRACKC	
		Access	On Conflict	Access	On Conflict	Access	On Conflict
EDECVIRTCHILD	Target [DS:RBX]	Concurrent		Concurrent		Concurrent	
	SECS [DS:RCX]	Concurrent		Concurrent		Concurrent	

Operation

Temp Variables in EDECVIRTCHILD Operational Flow

Name	Type	Size (bits)	Description
TMP_SECS	Physical Address	64	Physical address of the SECS of the page being modified.
TMP_VIRTCHILDCNT	Integer	64	Number of virtual child pages.

EDECVIRTCHILD Return Value in RAX

Error	Value	Description
No Error	0	EDECVIRTCHILD Successful.
SGX_EPC_PAGE_CONFLICT		Failure due to concurrent operation of another SGX instruction.
SGX_INVALID_COUNTER		Attempt to decrement counter that is already zero.

```
(* check alignment of DS:RBX *)
IF (DS:RBX is not 4K aligned) THEN
   #GP(0); FI;

(* check DS:RBX is an linear address of an EPC page *)
IF (DS:RBX does not resolve within an EPC) THEN
   #PF(DS:RBX, PFEC.SGX); FI;

(* check DS:RCX is an linear address of an EPC page *)
IF (DS:RCX does not resolve within an EPC) THEN
   #PF(DS:RCX, PFEC.SGX); FI;

(* Check the EPCPAGE for concurrency *)
IF (EPCPAGE is being modified) THEN
   RFLAGS.ZF = 1;
   RAX = SGX_EPC_PAGE_CONFLICT;
   goto DONE;
FI;

(* check that the EPC page is valid *)
IF (EPCM(DS:RBX).VALID = 0) THEN
   #PF(DS:RBX, PFEC.SGX); FI;

(* check that the EPC page has the correct type and that the back pointer matches the pointer passed as the pointer to parent *)
IF ((EPCM(DS:RBX).PAGE_TYPE = PT_REG) or
   (EPCM(DS:RBX).PAGE_TYPE = PT_TCS) or
```

```
    (EPCM(DS:RBX).PAGE_TYPE = PT_TRIM) or
    (EPCM(DS:RBX).PAGE_TYPE = PT_SS_FIRST) or
    (EPCM(DS:RBX).PAGE_TYPE = PT_SS_REST))
     THEN
    (* get the SECS of DS:RBX *)
    TMP_SECS := Address of SECS for (DS:RBX);
ELSE IF (EPCM(DS:RBX).PAGE_TYPE = PT_SECS) THEN
    (* get the physical address of DS:RBX *)
    TMP_SECS := Physical_Address(DS:RBX);
ELSE
    (* EDECVIRTCHILD called on page of incorrect type *)
    #PF(DS:RBX, PFEC.SGX); FI;

IF (TMP_SECS ≠ Physical_Address(DS:RCX)) THEN
    #GP(0); FI;

(* Atomically decrement virtchild counter and check for underflow *)
Locked_Decrement(SECS(TMP_SECS).VIRTCHILDCNT);
IF (There was an underflow) THEN
    Locked_Increment(SECS(TMP_SECS).VIRTCHILDCNT);
    RFLAGS.ZF := 1;
    RAX := SGX_INVALID_COUNTER;
    goto DONE;
FI;

RFLAGS.ZF := 0;
RAX := 0;

DONE:
(* clear flags *)
RFLAGS.CF := 0;
RFLAGS.PF := 0;
RFLAGS.AF := 0;
RFLAGS.OF := 0;
RFLAGS.SF := 0;
```

Flags Affected

ZF is set if EDECVIRTCHILD fails due to concurrent operation with another SGX instruction, or if there is a VIRTCHILDCNT underflow. Otherwise cleared.

Protected Mode Exceptions

#GP(0)	If a memory operand effective address is outside the DS segment limit.
	If DS segment is unusable.
	If a memory operand is not properly aligned.
	RBX does not refer to an enclave page associated with SECS referenced in RCX.
#PF(error code)	If a page fault occurs in accessing memory operands.
	If RBX does not refer to an enclave page (REG, TCS, TRIM, SECS).
	If RCX does not refer to an SECS page.

64-Bit Mode Exceptions

#GP(0)	If a memory address is in a non-canonical form. If a memory operand is not properly aligned. RBX does not refer to an enclave page associated with SECS referenced in RCX.
#PF(error code)	If a page fault occurs in accessing memory operands. If RBX does not refer to an enclave page (REG, TCS, TRIM, SECS). If RCX does not refer to an SECS page.

EINCVIRTCHILD—Increment VIRTCHILDCNT in SECS

Opcode/ Instruction	Op/En	64/32 bit Mode Support	CPUID Feature Flag	Description
EAX = 01H ENCLV[EINCVIRTCHILD]	IR	V/V	EAX[5]	This leaf function increments the SECS VIRTCHILDCNT field.

Instruction Operand Encoding

Op/En	EAX		RBX	RCX
IR	EINCVIRTCHILD (In)	Return error code (Out)	Address of an enclave page (In)	Address of an SECS page (In)

Description

This instruction increments the SECS VIRTCHILDCNT field. This instruction can only be executed when the current privilege level is 0.

The content of RCX is an effective address of an EPC page. The DS segment is used to create a linear address. Segment override is not supported.

EINCVIRTCHILD Memory Parameter Semantics

EPCPAGE	SECS
Read/Write access permitted by Non Enclave	Read access permitted by Enclave

The instruction faults if any of the following:

EINCVIRTCHILD Faulting Conditions

A memory operand effective address is outside the DS segment limit (32b mode).	A page fault occurs in accessing memory operands.
DS segment is unusable (32b mode).	RBX does not refer to an enclave page (REG, TCS, TRIM, SECS).
A memory address is in a non-canonical form (64b mode).	RCX does not refer to an SECS page.
A memory operand is not properly aligned.	RBX does not refer to an enclave page associated with SECS referenced in RCX.

Concurrency Restrictions

Table 38-76. Base Concurrency Restrictions of EINCVIRTCHILD

Leaf	Parameter	Base Concurrency Restrictions		
		Access	On Conflict	SGX_CONFLICT VM Exit Qualification
EINCVIRTCHILD	Target [DS:RBX]	Shared	SGX_EPC_PAGE_ CONFLICT	
	SECS [DS:RCX]	Concurrent		

Table 38-77. Additional Concurrency Restrictions of EINCVIRTCHILD

Leaf	Parameter	Additional Concurrency Restrictions					
		vs. EACCEPT, EACCEPTCOPY, EMODPE, EMODPR, EMODT		vs. EADD, EEXTEND, EINIT		vs. ETRACK, ETRACKC	
		Access	On Conflict	Access	On Conflict	Access	On Conflict
EINCVIRTCHILD	Target [DS:RBX]	Concurrent		Concurrent		Concurrent	
	SECS [DS:RCX]	Concurrent		Concurrent		Concurrent	

Operation

Temp Variables in EINCVIRTCHILD Operational Flow

Name	Type	Size (bits)	Description
TMP_SECS	Physical Address	64	Physical address of the SECS of the page being modified.

EINCVIRTCHILD Return Value in RAX

Error	Value	Description
No Error	0	EINCVIRTCHILD Successful.
SGX_EPC_PAGE_CONFLICT		Failure due to concurrent operation of another SGX instruction.

```
(* check alignment of DS:RBX *)
IF (DS:RBX is not 4K aligned) THEN
   #GP(0); FI;

(* check DS:RBX is an linear address of an EPC page *)
IF (DS:RBX does not resolve within an EPC) THEN
   #PF(DS:RBX, PFEC.SGX); FI;

(* check DS:RCX is an linear address of an EPC page *)
IF (DS:RCX does not resolve within an EPC) THEN
   #PF(DS:RCX, PFEC.SGX); FI;

(* Check the EPCPAGE for concurrency *)
IF (EPCPAGE is being modified) THEN
   RFLAGS.ZF = 1;
   RAX = SGX_EPC_PAGE_CONFLICT;
   goto DONE;
FI;

(* check that the EPC page is valid *)
IF (EPCM(DS:RBX).VALID = 0) THEN
   #PF(DS:RBX, PFEC.SGX); FI;

(* check that the EPC page has the correct type and that the back pointer matches the pointer passed as the pointer to parent *)
IF ((EPCM(DS:RBX).PAGE_TYPE = PT_REG) or
   (EPCM(DS:RBX).PAGE_TYPE = PT_TCS) or
   (EPCM(DS:RBX).PAGE_TYPE = PT_TRIM) or
   (EPCM(DS:RBX).PAGE_TYPE = PT_SS_FIRST) or
   (EPCM(DS:RBX).PAGE_TYPE = PT_SS_REST))
```

```
    THEN
  (* get the SECS of DS:RBX *)
  TMP_SECS := Address of SECS for (DS:RBX);
ELSE IF (EPCM(DS:RBX).PAGE_TYPE = PT_SECS) THEN
  (* get the physical address of DS:RBX *)
  TMP_SECS := Physical_Address(DS:RBX);
ELSE
  (* EINCVIRTCHILD called on page of incorrect type *)
  #PF(DS:RBX, PFEC.SGX); FI;

IF (TMP_SECS ≠ Physical_Address(DS:RCX)) THEN
  #GP(0); FI;

(* Atomically increment virtchild counter *)
Locked_Increment(SECS(TMP_SECS).VIRTCHILDCNT);

RFLAGS.ZF := 0;
RAX := 0;

DONE:
(* clear flags *)
RFLAGS.CF := 0;
RFLAGS.PF := 0;
RFLAGS.AF := 0;
RFLAGS.OF := 0;
RFLAGS.SF := 0;
```

Flags Affected

ZF is set if EINCVIRTCHILD fails due to concurrent operation with another SGX instruction; otherwise cleared.

Protected Mode Exceptions

#GP(0)	If a memory operand effective address is outside the DS segment limit.
	If DS segment is unusable.
	If a memory operand is not properly aligned.
	RBX does not refer to an enclave page associated with SECS referenced in RCX.
#PF(error code)	If a page fault occurs in accessing memory operands.
	If RBX does not refer to an enclave page (REG, TCS, TRIM, SECS).
	If RCX does not refer to an SECS page.

64-Bit Mode Exceptions

#GP(0)	If a memory address is in a non-canonical form.
	If a memory operand is not properly aligned.
	RBX does not refer to an enclave page associated with SECS referenced in RCX.
#PF(error code)	If a page fault occurs in accessing memory operands.
	If RBX does not refer to an enclave page (REG, TCS, TRIM, SECS).
	If RCX does not refer to an SECS page.

ESETCONTEXT—Set the ENCLAVECONTEXT Field in SECS

Opcode/ Instruction	Op/En	64/32 bit Mode Support	CPUID Feature Flag	Description
EAX = 02H ENCLV[ESETCONTEXT]	IR	V/V	EAX[5]	This leaf function sets the ENCLAVECONTEXT field in SECS.

Instruction Operand Encoding

Op/En	EAX		RCX	RDX
IR	ESETCONTEXT (In)	Return error code (Out)	Address of the destination EPC page (In, EA)	Context Value (In, EA)

Description

The ESETCONTEXT leaf overwrites the ENCLAVECONTEXT field in the SECS. ECREATE and ELD of an SECS set the ENCLAVECONTEXT field in the SECS to the address of the SECS (for access later in ERDINFO). The ESETCONTEXT instruction allows a VMM to overwrite the default context value if necessary, for example, if the VMM is emulating ECREATE or ELD on behalf of the guest.

The content of RCX is an effective address of the SECS page to be updated, RDX contains the address pointing to the value to be stored in the SECS. The DS segment is used to create linear address. Segment override is not supported.

The instruction fails if:

- The operand is not properly aligned.
- RCX does not refer to an SECS page.

ESETCONTEXT Memory Parameter Semantics

EPCPAGE	CONTEXT
Read access permitted by Enclave	Read/Write access permitted by Non Enclave

The instruction faults if any of the following:

ESETCONTEXT Faulting Conditions

A memory operand effective address is outside the DS segment limit (32b mode).	A memory operand is not properly aligned.
DS segment is unusable (32b mode).	A page fault occurs in accessing memory operands.
A memory address is in a non-canonical form (64b mode).	

Concurrency Restrictions

Table 38-78. Base Concurrency Restrictions of ESETCONTEXT

Leaf	Parameter	Base Concurrency Restrictions		
		Access	On Conflict	SGX_CONFLICT VM Exit Qualification
ESETCONTEXT	SECS [DS:RCX]	Shared	SGX_EPC_PAGE_ CONFLICT	

Table 38-79. Additional Concurrency Restrictions of ESETCONTEXT

Leaf	Parameter	Additional Concurrency Restrictions					
		vs. EACCEPT, EACCEPTCOPY, EMODPE, EMODPR, EMODT		vs. EADD, EEXTEND, EINIT		vs. ETRACK, ETRACKC	
		Access	On Conflict	Access	On Conflict	Access	On Conflict
ESETCONTEXT	SECS [DS:RCX]	Concurrent		Concurrent		Concurrent	

Operation

Temp Variables in ESETCONTEXT Operational Flow

Name	Type	Size (bits)	Description
TMP_SECS	Physical Address	64	Physical address of the SECS of the page being modified.
TMP_CONTEXT	CONTEXT	64	Data Value of CONTEXT.

ESETCONTEXT Return Value in RAX

Error	Value	Description
No Error	0	ESETCONTEXT Successful.
SGX_EPC_PAGE_CONFLICT		Failure due to concurrent operation of another SGX instruction.

```
(* check alignment of the EPCPAGE (RCX) *)
IF (DS:RCX is not 4KByte Aligned) THEN
   #GP(0); FI;

 (* check that EPCPAGE (DS:RCX) is the address of an EPC page *)
IF (DS:RCX does not resolve within an EPC)THEN
   #PF(DS:RCX, PFEC.SGX); FI;

(* check alignment of the CONTEXT field (RDX) *)
IF (DS:RDX is not 8Byte Aligned) THEN
   #GP(0); FI;

 (* Load CONTEXT into local variable *)
TMP_CONTEXT := DS:RDX

(* Check the EPC page for concurrency *)
IF (EPC page is being modified) THEN
   RFLAGS.ZF := 1;
   RFLAGS.CF := 0;
   RAX := SGX_EPC_PAGE_CONFLICT;
   goto DONE;
FI;

(* check page validity *)
IF (EPCM(DS:RCX).VALID = 0) THEN
   #PF(DS:RCX, PFEC.SGX);
FI;

(* check EPC page is an SECS page *)
```

```
IF (EPCM(DS:RCX).PT is not PT_SECS) THEN
   #PF(DS:RCX, PFEC.SGX);
FI;

(* load the context value into SECS(DS:RCX).ENCLAVECONTEXT *)
SECS(DS:RCX).ENCLAVECONTEXT := TMP_CONTEXT;

RAX := 0;
RFLAGS.ZF := 0;

DONE:
(* clear flags *)
RFLAGS.CF,PF,AF,OF,SF := 0;
```

Flags Affected

ZF is set if ESETCONTEXT fails due to concurrent operation with another SGX instruction; otherwise cleared. CF, PF, AF, OF, and SF are cleared.

Protected Mode Exceptions

#GP(0)	If a memory operand effective address is outside the DS segment limit.
	If DS segment is unusable.
	If a memory operand is not properly aligned.
#PF(error code)	If a page fault occurs in accessing memory operands.

64-Bit Mode Exceptions

#GP(0)	If a memory address is in a non-canonical form.
	If a memory operand is not properly aligned.
#PF(error code)	If a page fault occurs in accessing memory operands.

CHAPTER 39
INTEL® SGX INTERACTIONS WITH IA32 AND INTEL® 64 ARCHITECTURE

Intel® SGX provides Intel® Architecture with a collection of enclave instructions for creating protected execution environments on processors supporting IA32 and Intel® 64 architectures. These Intel SGX instructions are designed to work with legacy software and the various IA32 and Intel 64 modes of operation.

39.1 INTEL® SGX AVAILABILITY IN VARIOUS PROCESSOR MODES

The Intel SGX extensions (see Table 34-1) are available only when the processor is executing in protected mode of operation. Additionally, the extensions are not available in System Management Mode (SMM) of operation or in Virtual 8086 (VM86) mode of operation. Finally, all leaf functions of ENCLU and ENCLS require CR0.PG enabled.

The exact details of exceptions resulting from illegal modes and their priority are listed in the reference pages of ENCLS and ENCLU.

39.2 IA32_FEATURE_CONTROL

IA32_FEATURE_CONTROL MSR provides two new bits related to two aspects of Intel SGX: using the instruction extensions and launch control configuration.

39.2.1 Availability of Intel SGX

IA32_FEATURE_CONTROL[bit 18] allows BIOS to control the availability of Intel SGX extensions. For Intel SGX extensions to be available on a logical processor, bit 18 in the IA32_FEATURE_CONTROL MSR on that logical processor must be set, and IA32_FEATURE_CONTROL MSR on that logical processor must be locked (bit 0 must be set). See Section 34.7.1 for additional details. OS is expected to examine the value of bit 18 prior to enabling Intel SGX on the thread, as the settings of bit 18 is not reflected by CPUID.

39.2.2 Intel SGX Launch Control Configuration

The IA32_SGXLEPUBKEYHASHn MSRs used to configure authorized launch enclaves' MRSIGNER digest value. They are present on logical processors that support the collection of SGX1 leaf functions (i.e., CPUID.(EAX=12H, ECX=00H):EAX[0] = 1) and that CPUID.(EAX=07H, ECX=00H):ECX[30] = 1. IA32_FEATURE_CONTROL[bit 17] allows to BIOS to enable write access to these MSRs. If IA32_FEATURE_CONTROL.LE_WR (bit 17) is set to 1 and IA32_FEATURE_CONTROL is locked on that logical processor, IA32_SGXLEPUBKEYHASH MSRs on that logical processor are writeable. If this bit 17 is not set or IA32_FEATURE_CONTROL is not locked, IA32_SGXLEPUBKEYHASH MSRs are read only. See Section 36.1.4 for additional details.

39.3 INTERACTIONS WITH SEGMENTATION

39.3.1 Scope of Interaction

Intel SGX extensions are available only when the processor is executing in a protected mode operation (see Section 39.1 for Intel SGX availability in various processor modes). Enclaves abide by all the segmentation policies set up by the OS, but they can be more restrictive than the OS.

Intel SGX interacts with segmentation at two levels:

- The Intel SGX instruction (see the enclave instruction in Table 34-1).

- While executing inside an enclave (legacy instructions and enclave instructions permitted inside an enclave).

39.3.2 Interactions of Intel® SGX Instructions with Segment, Operand, and Addressing Prefixes

All the memory operands used by the Intel SGX instructions are interpreted as offsets within the data segment (DS). The segment-override prefix on Intel SGX instructions is ignored.

Operand size is fixed for each enclave instruction. The operand-size prefix is reserved, and results in a #UD exception if used.

All address sizes are determined by the operating mode of the processor. The address-size prefix is ignored. This implies that while operating in 64-bit mode of operation, the address size is always 64 bits, and while operating in 32-bit mode of operation, the address size is always 32 bits. Additionally, when operating in 16-bit addressing, memory operands used by enclave instructions use 32 bit addressing; the value of CS.D is ignored.

39.3.3 Interaction of Intel® SGX Instructions with Segmentation

All leaf functions of ENCLU and ENCLS instructions require that the DS segment be usable, and be an expand-up segment. Failing this check results in generation of a #GP(0) exception.

The Intel SGX leaf functions used for entering the enclave (ENCLU[EENTER] and ENCLU[ERESUME]) operate as follows:

- All usable segment registers except for FS and GS have a zero base.
- The contents of the FS/GS segment registers (including the hidden portion) is saved in the processor.
- New FS and GS values compatible with enclave security are loaded from the TCS
- The linear ranges and access rights available under the newly-loaded FS and GS must abide to OS policies by ensuring they are subsets of the linear-address range and access rights available for the DS segment.
- The CS segment mode (64-bit, compatible, or 32 bit modes) must be consistent with the segment mode for which the enclave was created, as indicated by the SECS.ATTRIBUTES.MODE64 bit, and that the CPL of the logical processor is 3

An exit from the enclave either via ENCLU[EEXIT] or via an AEX restores the saved values of FS/GS segment registers.

39.3.4 Interactions of Enclave Execution with Segmentation

During the course of execution, enclave code abides by all segmentation policies as dictated by IA32 and Intel 64 Architectures, and generates appropriate exceptions on violations.

Additionally, any attempt by software executing inside an enclave to modify the processor's segmentation state (e.g., via MOV seg register, POP seg register, LDS, far jump, etc; excluding WRFSBASE/WRGSBASE) results in the generation of a #UD. See Section 36.6.1 for more information.

Upon enclave entry via the EENTER leaf function, FS is loaded from the (TCS.OFSBASE + SECS.BASEADDR) and TCS.FSLIMIT fields and GS is loaded from the (TCS.OGSBASE + SECS.BASEADDR) and TCS.GSLIMIT fields.

Execution of WRFSBASE and WRGSBASE from inside a 64-bit enclave is allowed. The processor will save the new values into the current SSA frame on an asynchronous exit (AEX) and restore them back on enclave entry via ENCLU[ERESUME] instruction.

39.4 INTERACTIONS WITH PAGING

Intel SGX instructions are available only when the processor is executing in a protected mode of operation. Additionally, all Intel SGX leaf functions except for EDBGRD and EDBGWR are available only if paging is enabled. Any attempt to execute these leaf functions with paging disabled results in an invalid-opcode exception (#UD). As with

segmentation, enclaves abide by all the paging policies set up by the OS, but they can be more restrictive than the OS.

All the memory operands passed into Intel SGX instructions are interpreted as offsets within the DS segment, and the linear addresses generated by combining these offsets with DS segment register are subject to paging-based access control if paging is enabled at the time of the execution of the leaf function.

Since the ENCLU[EENTER] and ENCLU[ERESUME] can only be executed when paging is enabled, and since paging cannot be disabled by software running inside an enclave (recall that enclaves always run with CPL = 3), enclave execution is always subject to paging-based access control. The Intel SGX access control itself is implemented as an extension to the existing paging modes. See Section 35.5 for details.

Execution of Intel SGX instructions may set accessed and dirty flags on accesses to EPC pages that do not fault even if the instruction later causes a fault for some other reason.

39.5 INTERACTIONS WITH VMX

Intel SGX functionality (including SGX1 and SGX2) can be made available to software running in either VMX root operation or VMX non-root operation, as long as the processor is using a legal mode of operation (see Section 39.1).

A VMM has the flexibility to configure a VMCS to permit a guest to use any subset of the ENCLS leaf functions. Availability of the ENCLU leaf functions in VMX non-root operation has the same requirement as ENCLU leaf functions outside of a virtualized environment.

Details of the VMCS control to allow VMM to configure support of Intel SGX in VMX non-root operation is described in Section 39.5.1

39.5.1 VMM Controls to Configure Guest Support of Intel® SGX

Intel SGX capabilities are primarily exposed to the software via the CPUID instruction. VMMs can virtualize CPUID instruction to expose/hide this capability to/from guests.

Some of Intel SGX resources are exposed/controlled via model-specific registers (see Section 34.7). VMMs can virtualize these MSRs for the guests using the MSR bitmaps referenced by pointers in the VMCS.

The VMM can partition the Enclave Page Cache, and assign various partitions to (a subset of) its guests via the usual memory-virtualization techniques such as paging or the extended page table mechanism (EPT).

The VMM can set the "enable ENCLS exiting" VM-execution controls to cause a VM exit when the ENCLS instruction is executed in VMX non-root operation. If the "enable ENCLS exiting" control is 0, all of the ENCLS leaf functions are permitted in VMX non-root operation. If the "enable ENCLS exiting" control is 1, execution of ENCLS leaf functions in VMX non-root operation is governed by consulting the bits in a new 64-bit VM-execution control field called the ENCLS-exiting bitmap (Each bit in the bitmap corresponds to an ENCLS leaf function with an EAX value that is identical to the bit's position). When bits in the "ENCLS-exiting bitmap" are set, attempts to execute the corresponding ENCLS leaf functions in VMX non-root operation causes VM exits. The checking for these VM exits occurs immediately after checking that CPL = 0.

39.5.2 Interactions with the Extended Page Table Mechanism (EPT)

Intel SGX instructions are fully compatible with the extended page-table mechanism (EPT; see Section 29.3).

All the memory operands passed into Intel SGX instructions are interpreted as offsets within the DS segment, and the linear addresses generated by combining these offsets with DS segment register are subject to paging and EPT. As with paging, enclaves abide by all the policies set up by the VMM.

The Intel SGX access control itself is implemented as an extension to paging and EPT, and may be more restrictive. See Section 39.4 for details of this extension.

An execution of an Intel SGX instruction may set accessed and dirty flags for EPT (when enabled; see Section 29.3.5) on accesses to EPC pages that do not fault or cause VM exits even if the instruction later causes a fault or VM exit for some other reason.

39.5.3 Interactions with APIC Virtualization

This section applies to Intel SGX in VMX non-root operation when the "virtualize APIC accesses" VM-execution control is 1.

A memory access by an enclave instruction that implicitly uses a cached physical address is never checked for overlap with the APIC-access page. Such accesses never cause APIC-access VM exits and are never redirected to the virtual-APIC page. Implicit memory accesses can only be made to the SECS, the TCS, or the SSA of an enclave (see Section 35.5.3.2).

An explicit Enclave Access (a linear memory access which is either from within an enclave into its ELRANGE, or an access by an Intel SGX instruction that is expected to be in the EPC) that overlaps with the APIC-access page causes a #PF exception (APIC page is expected to be outside of EPC).

Non-Enclave accesses made either by an Intel SGX instruction or by a logical processor inside an enclave to an address that without SGX would have caused redirection to the virtual-APIC page instead cause an APIC-access VM exit.

Other than implicit accesses made by Intel SGX instructions, guest-physical and physical accesses are not considered "enclave accesses"; consequently, such accesses result in undefined behavior if these accesses eventually reach EPC. This applies to any non-enclave physical accesses.

While a logical processor is executing inside an enclave, an attempt to execute an instruction outside of ELRANGE results in a #GP(0), even if the linear address would translate to a physical address that overlaps the APIC-access page.

39.5.4 Interactions with VT and SGX concurrency

In some cases, a VMM is required to handle conflicts between its own operation and a guest operation on EPC pages that are present in both guest and VMM address space. These conflict would otherwise cause the guest to experience an unexpected behavior (vs. running directly on the h/w). These conflict cases are:

- ETRACK/ETRACKC failure due to Entry Epoch Object Lock conflict or reference tracking check failure.
- EPC Page Resource conflict.

A new exit reason is defined for all those cases: SGX_CONFLICT (value 71). The VMCS exit qualification field details the specific case as follows:

Table 39-1. SGX Conflict Exit Qualification

Bits	Size (bits)	Name	Description
15:0	16	Code	Exit qualification code. The following values are defined: 0: TRACKING_RESOURCE_CONFLICT 1: TRACKING_REFERENCE_CONFLICT 2: EPC_PAGE_CONFLICT_EXCEPTION 3: EPC_PAGE_CONFLICT_ERROR Other: Reserved
31:16	16	Error	Error code. Applicable only if the exit qualification code is EPC_PAGE_CONFLICT_ERROR; contains the error code that would be returned in RAX if the instruction was executed on bare metal platform or if the ENABLE_EPC_VIRTUALIZATION_EXTENSIONS bit in the secondary processor control field is not set. In other cases this field is reserved as 0.
63:32	32	Reserved	Always 0.

This SGX_CONFLICT exiting behavior is controlled by a VM execution control called ENABLE_EPC_VIRTUALIZATION_EXTENSIONS (bit 29 of the secondary processor control field).

Details for various SGX_CONFLICT VMEXIT cases are provided in the following sections.

39.5.5 Virtual Child Tracking

SGX oversubscription support adds the ability to associate virtual children with each enclave using the ENCLV[EINCVIRTCHILD] and ENCLV[EDECVIRTCHILD] instructions. The VMM enables checking of the virtual child count by EREMOVE and EWB in guests with a new VM execution control called ENABLE_EPC_VIRTUALIZATION_EXTENSIONS.

When in VMX non-root operation and the ENABLE_EPC_VIRTUALIZATION_EXTENSIONS control enabled, the following instructions change their behavior:

- EWB and EREMOVE return the SGX_CHILD_PRESENT error code if any virtual or physical children are associated with the enclave.
- ERDINFO set STATUS.CHILDPRESENT if any virtual or physical children are associated with the enclave.

39.5.6 Handling EPCM Entry Lock Conflicts

When performing paging within a VMM, it is possible for a contention on the EPC page to happen in the following case:

- The VMM performs an ELDB/ELDU/ELDBC/ELDUC of an enclave page, and the guest attempts to perform some SGX instruction (e.g., EREMOVE) where the same SECS parent page is required.

A similar conflict may occur if the VMM uses EINCVIRTCHILD or EDECVIRTCHILD pointing to an SECS page. In all other cases where a SGX instruction executed by the VMM the applicable EPC page should not be mapped to the guest, thus no resource conflict occurs.

This conflicting situation can cause the guest's instruction to fail and cause guest instability. To help the VMM manage such conflicts, the SGX VMM paging extensions introduce a new VM-Exit that will be triggered whenever the guest encounters a resource conflict.

The exit reason is SGX_CONFLICT. The exit qualification field is used to distinguish the two kinds of resource conflicts:

- A value of EPCM_RESOURCE_CONFLICT_EXCEPTION (2) in the exit qualification code field indicates that a resource conflict occurred that would result in a #GP. In that case, the exit qualification error field is set to zero.
- A value of EPC_PAGE_CONFLICT_ERROR (3) in the exit qualification code field indicates that a resource conflict occurred that would result in an error code being return in RAX. In that case, the exit qualification error field is set to SGX_EPC_PAGE_CONFLICT.

The Guest Linear Address and Guest Physical Address fields are set to the guest linear and guest physical addresses respectively of the EPC page on which the conflict occurred. The VMM may determine which instruction induced the exit by reading RAX. The exit also populates the VM-exit instruction length field.

The VMM can determine whether the conflict may be due to its own operation, e.g., by setting a per-enclave busy indicator before executing ELD*, and clearing it afterwards. In that case, the VMM can handle an SGX Conflict (EPCM_PAGE_CONFLICT_*) exit by resuming guest execution at the same instruction, allowing the guest to re-execute the instruction. The VMM may also take steps to throttle its own paging thread to reduce contention with the guest.

If the VMM determines that the conflict is not due to its own operation, it may inject a #GP (in case of EPC_PAGE_CONFLICT_EXCEPTION), or emulate an error code as the guest instruction would return (in case of EPC_PAGE_CONFLICT_ERROR) by setting ZF and copying the error value provided in the exit qualification to guest RAX.

To gracefully handle resource contention on the VMM side, the VMM should use the new ELDBC and ELDUC instructions. These are similar to ELDB and ELDU respectively, except that on EPC resource contention they return an SGX_EPC_PAGE_CONFLICT error instead of issuing a #GP. In case of an error, the VMM can retry the instruction, possibly throttling the guest to assure progress.

When using EDECVIRTCHILD and EINCVIRTCHILD, the VMM should preferably point to the enclave child page, not to the SECS page, avoiding resource conflict on the SECS. If the VMM chooses to point to the SECS page, it should handle conflicts in the same way as handling the ELD* case.

39.5.7 Context Tracking

The ENCLAVECONTEXT field in the SECS is available for use by the VMM to track context information associated with that enclave, such as the GPA of the SECS in the context of the appropriate guest. This field is initialized by the successful execution of ECREATE and ELD of an SECS page. The value stored in the ENCLAVECONTEXT field will be the translation of the target page address produced by paging (GPA in VMMs that have EPTs turned on). VMMs may override this default value by calling the ENCLV[ESETCONTEXT] instruction, which allows the VMM to store an arbitrary 64-bit value in the ENCLAVECONTEXT field. The VMM may later access the ENCLAVECONTEXT field by calling ENCLS[ERDINFO] on any member page of the enclave, including the SECS.

For nested virtualization cases, the lowest level VMM can make SGX oversubscription instructions higher level guest VMMs. In that case the lower level VMM can simply inject #GP to higher level VMMs when attempting to execute these instructions.

However, if VMMs expose SGX oversubscription instructions to higher level VMMs, then VMMs have to use ENCLV[ESETCONTEXT] instruction to properly manage the ENCLAVECONTEXT field of SECS during paging operations. That may involve emulating ECREATE, ELD, ESETCONTEXT, and ERDINFO instructions apart from managing ENCLAVECONTEXT values.

39.6 INTEL® SGX INTERACTIONS WITH ARCHITECTURALLY-VISIBLE EVENTS

All architecturally visible events (exceptions, interrupts, SMI, NMI, INIT, VM exit) can be detected while inside an enclave and will cause an asynchronous enclave exit if they are not blocked. Additionally, INT3, and the SignalTXTMsg[SENTER] (i.e., GETSEC[SENTER]'s rendezvous event message) events also cause asynchronous enclave exits. Note that SignalTXTMsg[SEXIT] (i.e., GETSEC[SEXIT]'s teardown message) does not cause an AEX.

On an AEX, information about the event causing the AEX is stored in the SSA (see Section 37.4 for details of AEX). The information stored in the SSA only describes the first event that triggered the AEX. If parsing/delivery of the first event results in detection of further events (e.g., VM exit, double fault, etc.), then the event information in the SSA is not updated to reflect these subsequently detected events.

39.7 INTERACTIONS WITH THE PROCESSOR EXTENDED STATE AND MISCELLANEOUS STATE

39.7.1 Requirements and Architecture Overview

Processor extended states are the ISA features that are enabled by the settings of CR4.OSXSAVE and the XCR0 register. Processor extended states are normally saved/restored by software via XSAVE/XRSTOR instructions. Details of discovery of processor extended states and management of these states are described in CHAPTER 13 of *Intel® 64 and IA-32 Architectures Software Developer's Manual, Volume 3A*.

Additionally, the following requirements apply to Intel SGX:

- On an AEX, the Intel SGX architecture must protect the processor extended state and miscellaneous state by saving them in the enclave's state-save area (SSA), and clear the secrets from the processor extended state that is used by an enclave.
- Intel SGX architecture must verify that the SSA frame size is large enough to contain all the processor extended states and miscellaneous state used by the enclave.
- Intel SGX architecture must ensure that enclaves can only use processor extended state that is enabled by system software in XCR0.
- Enclave software should be able to discover only those processor extended state and miscellaneous state for which such protection is enabled.
- The processor extended states that are enabled inside the enclave must be approved by the enclave developer:
  - — Certain processor extended state (e.g., Memory Protection Extensions, see Appendix E, "Intel® Memory Protection Extensions" of *Intel® 64 and IA-32 Architectures Software Developer's Manual, Volume 1*)

modify the behavior of the legacy ISA software. If such features are enabled for enclaves that do not understand those features, then such a configuration could lead to a compromise of the enclave's security.

- The processor extended states that are enabled inside the enclave must form an integral part of the enclave's identity. This requirement has two implications:
  - Service providers may decide to assign different trust level to the same enclave depending on the ISA features the enclave is using.

To meet these requirements, the Intel SGX architecture defines a sub-field called X-Feature Request Mask (XFRM) in the ATTRIBUTES field of the SECS. On enclave creation (ENCLS[ECREATE] leaf function), the required SSA frame size is calculated by the processor from the list of enabled extended and miscellaneous states and verified against the actual SSA frame size defined by SECS.SSAFRAMESIZE.

On enclave entry, after verifying that XFRM is only enabling features that are already enabled in XCR0, the value in the XCR0 is saved internally by the processor, and is replaced by the XFRM. On enclave exit, the original value of XCR0 is restored. Consequently, while inside the enclave, the processor extended states enabled in XFRM are in enabled state, and those that are disabled in XFRM are in disabled state.

The entire ATTRIBUTES field, including the XFRM subfield is integral part of enclave's identity (i.e., its value is included in reports generated by ENCLU[EREPORT], and select bits from this field can be included in key-derivation for keys obtained via the ENCLU[EGETKEY] leaf function).

Enclave developers can create their enclave to work with certain features and fallback to another code path in case those features aren't available (e.g., optimize for AVX and fallback to SSE). For this purpose Intel SGX provides the following fields in SIGSTRUCT: ATTRIBUTES, ATTRIBUTESMASK, MISCSELECT, and MISCMASK. EINIT ensures that the final SECS.ATTRIBUTES and SECS.MISCSELECT comply with the enclave developer's requirements as follows:

SIGSTRUCT.ATTRIBUTES & SIGSTRUCT.ATTRIBUTEMASK = SECS.ATTRIBUTES & SIGSTRUCT.ATTRIBUTEMASK

SIGSTRUCT.MISCSELECT & SIGSTRUCT.MISCMASK = SECS.MISCSELECT & SIGSTRUCT.MISCMASK.

On an asynchronous enclave exit, the processor extended states enabled by XFRM are saved in the current SSA frame, and overwritten by synthetic state (see Section 37.3 for the definition of the synthetic state). When the interrupted enclave is resumed via the ENCLU[ERESUME] leaf function, the saved state for processor extended states enabled by XFRM is restored.

39.7.2 Relevant Fields in Various Data Structures

39.7.2.1 SECS.ATTRIBUTES.XFRM

The ATTRIBUTES field of the SECS data structure (see Section 35.7) contains a sub-field called XSAVE-Feature Request Mask (XFRM). Software populates this field at the time of enclave creation according to the features that are enabled by the operating system and approved by the enclave developer.

Intel SGX architecture guarantees that during enclave execution, the processor extended state configuration of the processor is identical to what is required by the XFRM sub-field. All the processor extended states enabled in XFRM are saved on AEX from the enclave and restored on ERESUME.

The XFRM sub-field has the same layout as XCR0, and has consistency requirements that are similar to those for XCR0. Specifically, the consistency requirements on XFRM values depend on the processor implementation and the set of features enabled in CR4.

Legal values for SECS.ATTRIBUTES.XFRM conform to these requirements:

- XFRM[1:0] must be set to 0x3.
- If the processor does not support XSAVE, or if the system software has not enabled XSAVE, then XFRM[63:2] must be zero.
- If the processor does support XSAVE, XFRM must contain a value that would be legal if loaded into XCR0.

The various consistency requirements are enforced at different times in the enclave's life cycle, and the exact enforcement mechanisms are elaborated in Section 39.7.3 through Section 39.7.6.

On processors not supporting XSAVE, software should initialize XFRM to 0x3. On processors supporting XSAVE, software should initialize XFRM to be a subset of XCR0 that would be present at the time of enclave execution.

Because bits 0 and 1 of XFRM must always be set, the use of Intel SGX requires that SSE be enabled (CR4.OSFXSR = 1).

39.7.2.2 SECS.SSAFRAMESIZE

The SSAFRAMESIZE field in the SECS data structure specifies the number of pages which software allocated[1] for each SSA frame, including both the GPRSGX area, MISC area, the XSAVE area (x87 and XMM states are stored in the latter area), and optionally padding between the MISC and XSAVE area. The GPRSGX area must hold all the general-purpose registers and additional Intel SGX specific information. The MISC area must hold the Miscellaneous state as specified by SECS.MISCSELECT, the XSAVE area holds the set of processor extended states specified by SECS.ATTRIBUTES.XFRM (see Section 35.9 for the layout of SSA and Section 39.7.3 for ECREATE's consistency checks). The SSA is always in non-compacted format.

If the processor does not support XSAVE, the XSAVE area will always be 576 bytes; a copy of XFRM (which will be set to 0x3) is saved at offset 512 on an AEX.

If the processor does support XSAVE, the length of the XSAVE area depends on SECS.ATTRIBUTES.XFRM. The length would be equal to what CPUID.(EAX=0DH, ECX= 0):EBX would return if XCR0 were set to XFRM. The following pseudo code illustrates how software can calculate this length using XFRM as the input parameter without modifying XCR0:

```
offset = 576;
size_last_x = 0;
For x=2 to 63
IF (XFRM[x] != 0) Then
   tmp_offset = CPUID.(EAX=0DH, ECX= x):EBX[31:0];
    IF (tmp_offset >= offset + size_last_x) Then
        offset = tmp_offset;
        size_last_x = CPUID.(EAX=0DH, ECX= x):EAX[31:0];
     FI;
FI;
EndFor
return (offset + size_last_x); (* compute_xsave_size(XFRM), see "ECREATE—Create an SECS page in the Enclave Page Cache"*)
```

Where the non-zero bits in XFRM are a subset of non-zero bit fields in XCR0.

The size of the MISC region depends on the setting of SECS.MISCSELECT and can be calculated using the layout information described in Section 35.9.2

39.7.2.3 XSAVE Area in SSA

The XSAVE area of an SSA frame begins at offset 0 of the frame.

39.7.2.4 MISC Area in SSA

The MISC area of an SSA frame is positioned immediately before the GPRSGX region.

39.7.2.5 SIGSTRUCT Fields

Intel SGX provides the flexibility for an enclave developer to choose the enclave's code path according to the features that are enabled on the platform (e.g., optimize for AVX and fallback to SSE). See Section 39.7.1 for details.

1. It is the responsibility of the enclave to actually allocate this memory.

SIGSTRUCT includes the following fields:

SIGSTRUCT.ATTRIBUTES, SIGSTRUCT.ATTRIBUTEMASK, SIGSTRUCT.MISCSELECT, SIGSTRUCT.MISCMASK.

39.7.2.6 REPORT.ATTRIBUTES.XFRM and REPORT.MISCSELECT

The processor extended states and miscellaneous states that are enabled inside the enclave form an integral part of the enclave's identity and are therefore included in the enclave's report, as provided by the ENCLU[EREPORT] leaf function. The REPORT structure includes the enclave's XFRM and MISCSELECT configurations.

39.7.2.7 KEYREQUEST

An enclave developer can specify which bits out of XFRM and MISCSELECT ENCLU[EGETKEY] should include in the derivation of the sealing key by specifying ATTRIBUTESMASK and MISCMASK in the KEYREQUEST structure.

39.7.3 Processor Extended States and ENCLS[ECREATE]

The ECREATE leaf function of the ENCLS instruction enforces a number of consistency checks described earlier. The execution of ENCLS[ECREATE] leaf function results in a #GP(0) in any of the following cases:

- SECS.ATTRIBUTES.XFRM[1:0] is not 3.
- The processor does not support XSAVE and any of the following is true:
  - SECS.ATTRIBUTES.XFRM[63:2] is not 0.
  - SECS.SSAFRAMESIZE is 0.
- The processor supports XSAVE and any of the following is true:
  - XSETBV would fault on an attempt to load XFRM into XCR0.
  - XFRM[63]=1.
  - The SSAFRAME is too small to hold required, enabled states (see Section 39.7.2.2).

39.7.4 Processor Extended States and ENCLU[EENTER]

39.7.4.1 Fault Checking

The EENTER leaf function of the ENCLU instruction enforces a number of consistency requirements described earlier. The execution of the ENCLU[EENTER] leaf function results in a #GP(0) in any of the following cases:

- If CR4.OSFXSR=0.
- If The processor supports XSAVE and either of the following is true:
  - CR4.OSXSAVE=0 and SECS.ATTRIBUTES.XFRM is not 3.
  - (SECS.ATTRIBUTES.XFRM & XCR0) != SECS.ATTRIBUTES.XFRM

39.7.4.2 State Loading

If ENCLU[EENTER] is successful, the current value of XCR0 is saved internally by the processor and replaced by SECS.ATTRIBUTES.XFRM.

39.7.5 Processor Extended States and AEX

39.7.5.1 State Saving

On an AEX, processor extended states are saved into the XSAVE area of the SSA frame in a compatible format with XSAVE that was executed with EDX:EAX = SECS.ATTRIBUTES.XFRM, with the memory operand being the XSAVE area, and (for 64-bit enclaves) as if REX.W=1. The XSTATE_BV part of the XSAVE header is saved with 0 for every bit that is 0 in XFRM. Other bits may be saved as 0 if the state saved is initialized.

Note that enclave entry ensures that if CR4.OSXSAVE is set to 0, then SECS.ATTRIBUTES.XFRM is set to 3. It should also be noted that it is not possible to enter an enclave with FXSAVE disabled.

39.7.5.2 State Synthesis

After saving the extended state, the processor restores XCR0 to the value it held at the time of the most recent enclave entry.

The state of features corresponding to bits set in XFRM is synthesized. In general, these states are initialized. Details of state synthesis on AEX are documented in Section 37.3.1.

39.7.6 Processor Extended States and ENCLU[ERESUME]

39.7.6.1 Fault Checking

The ERESUME leaf function of the ENCLU instruction enforces a number of consistency requirements described earlier. Specifically, the ENCLU[ERESUME] leaf function results in a #GP(0) in any of the following cases:

- CR4.OSFXSR=0.
- The processor supports XSAVE and either of the following is true:
  - CR4.OSXSAVE=0 and SECS.ATTRIBUTES.XFRM is not 3.
  - (SECS.ATTRIBUTES.XFRM & XCR0) != SECS.ATTRIBUTES.XFRM.

A successful execution of ENCLU[ERESUME] loads state from the XSAVE area of the SSA frame in a fashion similar to that used by the XRSTOR instruction. Data in the XSAVE area that would cause the XRSTOR instruction to fault will cause the ENCLU[ERESUME] leaf function to fault. Examples include, but are not restricted to the following:

- A bit is set in the XSTATE_BV field and clear in XFRM.
- The required bytes in the header are not clear.
- Loading data would set a reserved bit in MXCSR.

Any of these conditions will cause ERESUME to fault, even if CR4.OSXSAVE=0.

39.7.6.2 State Loading

If ENCLU[ERESUME] is successful, the current value of XCR0 is saved internally by the processor and replaced by SECS.ATTRIBUTES.XFRM.

State is loaded from the XSAVE area of the SSA frame as if the XRSTOR instruction were executed with XCR0=XFRM, EDX:EAX = XFRM, with the memory operand being the XSAVE area, and (for 64-bit enclaves) as if REX.W=1.

ENCLU[ERESUME] ensures that a subsequent execution of XSAVEOPT inside the enclave will operate properly (e.g., by marking all state as modified).

39.7.7 Processor Extended States and ENCLU[EEXIT]

The ENCLU[EEXIT] leaf function does not perform any X-feature specific consistency checks, nor performs any state synthesis. It is the responsibility of enclave software to clear any sensitive data from the registers before

executing EEXIT. However, successful execution of the ENCLU[EEXIT] leaf function restores XCR0 to the value it held at the time of the most recent enclave entry.

39.7.8 Processor Extended States and ENCLU[EREPORT]

The ENCLU[EREPORT] leaf function creates the MAC-protected REPORT structure that reports on the enclave's identity. ENCLU[EREPORT] includes in the report the values of SECS.ATTRIBUTES.XFRM and SECS.MISCSELECT.

39.7.9 Processor Extended States and ENCLU[EGETKEY]

The ENCLU[EGETKEY] leaf function returns a cryptographic key based on the information provided by the KEYREQUEST structure. Intel SGX provides the means for isolation between different operating conditions by allowing an enclave developer to select which bits out of XFRM and MISCSELECT need to be included in the derivation of the keys.

39.8 INTERACTIONS WITH SMM

39.8.1 Availability of Intel® SGX instructions in SMM

Enclave instructions are not available in SMM, and any attempt to execute ENCLS or ENCLU instructions inside SMM results in an invalid-opcode exception (#UD).

39.8.2 SMI while Inside an Enclave

If the logical processor executing inside an enclave receives an SMI, the logical processor exits the enclave asynchronously. The response to an SMI received while executing inside an enclave depends on whether the dual-monitor treatment is enabled. For detailed discussion of transfer to SMM, see Chapter 32, "System Management Mode" of the *Intel® 64 and IA-32 Architectures Software Developer's Manual, Volume 3C*.

If the logical processor executing inside an enclave receives an SMI when dual-monitor treatment is not enabled, the logical processor exits the enclave asynchronously, and transfers the control to the SMM handler. In addition to saving the synthetic architectural state to the SMRAM State Save Map (SSM), the logical processor also sets the "Enclave Interruption" bit in the SMRAM SSM (bit position 1 in SMRAM field at offset 7EE0H).

If the logical processor executing inside an enclave receives an SMI when dual-monitor treatment is enabled, the logical processor exits the enclave asynchronously, and transfers the control to the SMM monitor via SMM VM exit. The SMM VM exit sets the "Enclave Interruption" bit in the Exit Reason (see Table 39-2) and in the Guest Interruptibility State field (see Table 39-3) of the SMM VMCS.

39.8.3 SMRAM Synthetic State of AEX Triggered by SMI

All processor registers saved in the SMRAM have the same synthetic values listed in Section 37.3. Additional SMRAM fields that are treated specially on SMI are:

Table 39-2. SMRAM Synthetic States on Asynchronous Enclave Exit

Position	Field	Value	Writable
SMRAM Offset 07EE0H.Bit 1	ENCLAVE_INTERRUPTION	Set to 1 if exit occurred in enclave mode	No

39.9 INTERACTIONS OF INIT, SIPI, AND WAIT-FOR-SIPI WITH INTEL® SGX

INIT received inside an enclave, while the logical processor is not in VMX operation, causes the logical processor to exit the enclave asynchronously. After the AEX, the processor's architectural state is initialized to "Power-on" state (Table 9.1 in *Intel® 64 and IA-32 Architectures Software Developer's Manual, Volume 3A*). If the logical processor is BSP, then it proceeds to execute the BIOS initialization code. If the logical processor is an AP, it enters wait-for-SIPI state.

INIT received inside an enclave, while the logical processor (LP) is in VMX root operation, follows regular Intel Architecture behavior and is blocked.

INIT received inside an enclave, while the logical processor is in VMX non-root operation, causes an AEX. Subsequent to the AEX, the INIT causes a VM exit with the Enclave Interruption bit in the exit-reason field in the VMCS.

A processor cannot be inside an enclave in the wait-for-SIPI state. Consequently, a SIPI received while inside an enclave is lost.

Intel SGX does not change the behavior of the processor in the wait-for-SIPI state.

The SGX-related processor states after INIT-SIPI-SIPI is as follows:

- EPC Settings: Unchanged
- EPCM: Unchanged
- CPUID.LEAF_12H.*: Unchanged
- ENCLAVE_MODE: 0 (LP exits enclave asynchronously)
- MEE state: Unchanged

Software should be aware that following INIT-SIPI-SIPI, the EPC might contain valid pages and should take appropriate measures such as initialize the EPC with the EREMOVE leaf function.

39.10 INTERACTIONS WITH DMA

DMA is not allowed to access any Processor Reserved Memory.

39.11 INTERACTIONS WITH TXT

39.11.1 Enclaves Created Prior to Execution of GETSEC

Enclaves which have been created before the GETSEC[SENTER] leaf function are available for execution after the successful completion of GETSEC[SENTER] and the corresponding SINIT ACM. Actions that a TXT Launched Environment performs in preparation to execute code in the Launched Environment, also applies to enclave code that would run after GETSEC[SENTER].

39.11.2 Interaction of GETSEC with Intel® SGX

All leaf functions of the GETSEC instruction are illegal inside an enclave, and results in an invalid-opcode exception (#UD).

Responding Logical Processors (RLP) which are executing inside an enclave at the time a GETSEC[SENTER] event occurs perform an AEX from the enclave and then enter the Wait-for-SIPI state.

RLP executing inside an enclave at the time of GETSEC[SEXIT], behave as defined for GETSEC[SEXIT]-that is, the RLPs pause during execution of SEXIT and resume after the completion of SEXIT.

The execution of a TXT launch does not affect Intel SGX configuration or security parameters.

39.11.3 Interactions with Authenticated Code Modules (ACMs)

Intel SGX only allows launching ACMs with an Intel SGX SVN that is at the same level or higher than the expected Intel SGX SVN. The expected Intel SGX SVN is specified by BIOS and locked down by the processor on the first successful execution of an Intel SGX instruction that doesn't return an error code. Intel SGX provides interfaces for system software to discover whether a non faulting Intel SGX instruction has been executed, and evaluate the suitability of the Intel SGX SVN value of any ACM that is expected to be launched by the OS or the VMM.

These interfaces are provided through a read-only MSR called the IA32_SGX_SVN_STATUS MSR (MSR address 500h). The IA32_SGX_SVN_STATUS MSR has the format shown in Table 39-3.

Table 39-3. Layout of the IA32_SGX_SVN_STATUS MSR

Bit Position	Name	ACM Module ID	Value
0	Lock	N.A.	▪ If 1, indicates that a non-faulting Intel SGX instruction has been executed, consequently, launching a properly signed ACM but with Intel SGX SVN value less than the BIOS specified Intel SGX SVN threshold would lead to an TXT shutdown. ▪ If 0, indicates that the processor will allow a properly signed ACM to launch irrespective of the Intel SGX SVN value of the ACM.
15:1	RSVD	N.A.	0
23:16	SGX_SVN_SINIT	SINIT ACM	▪ If CPUID.01H:ECX.SMX =1, this field reflects the expected threshold of Intel SGX SVN for the SINIT ACM. ▪ If CPUID.01H:ECX.SMX =0, this field is reserved (0).
63:24	RSVD	N.A.	0

OS/VMM that wishes to launch an architectural ACM such as SINIT is expected to read the IA32_SGX_SVN_STATUS MSR to determine whether the ACM can be launched or a new ACM is needed:

- If either the Intel SGX SVN of the ACM is greater than the value reported by IA32_SGX_SVN_STATUS, or the lock bit in the IA32_SGX_SVN_STATUS is not set, then the OS/VMM can safely launch the ACM.
- If the Intel SGX SVN value reported in the corresponding component of the IA32_SGX_SVN_STATUS is greater than the Intel SGX SVN value in the ACM's header, and if bit 0 of IA32_SGX_SVN_STATUS is 1, then the OS/VMM should not launch that version of the ACM. It should obtain an updated version of the ACM either from the BIOS or from an external resource.

However, OSVs/VMMs are strongly advised to update their version of the ACM any time they detect that the Intel SGX SVN of the ACM carried by the OS/VMM is lower than that reported by IA32_SGX_SVN_STATUS MSR, irrespective of the setting of the lock bit.

39.12 INTERACTIONS WITH CACHING OF LINEAR-ADDRESS TRANSLATIONS

Entering and exiting an enclave causes the logical processor to flush all the global linear-address context as well as the linear-address context associated with the current VPID and PCID. The MONITOR FSM is also cleared.

39.13 INTERACTIONS WITH INTEL® TRANSACTIONAL SYNCHRONIZATION EXTENSIONS (INTEL® TSX)

1. ENCLU or ENCLS instructions inside an HLE region will cause the flow to be aborted and restarted non-speculatively. ENCLU or ENCLS instructions inside an RTM region will cause the flow to be aborted and transfer control to the fallback handler.

2. If XBEGIN is executed inside an enclave, the processor does NOT check whether the address of the fallback handler is within the enclave.

3. If an RTM transaction is executing inside an enclave and there is an attempt to fetch an instruction outside the enclave, the transaction is aborted and control is transferred to the fallback handler. No #GP is delivered.

4. If an RTM transaction is executing inside an enclave and there is a data access to an address within the enclave that denied due to EPCM content (e.g., to a page belonging to a different enclave), the transaction is aborted and control is transferred to the fallback handler. No #GP is delivered.

5. If an RTM transaction executing inside an enclave aborts and the address of the fallback handler is outside the enclave, a #GP is delivered after the abort (EIP reported is that of the fallback handler).

39.13.1 HLE and RTM Debug

RTM debug will be suppressed on opt-out enclave entry. After opt-out entry, the logical processor will behave as if IA32_DEBUG_CTL[15]=0. Any #DB detected inside an RTM transaction region will just cause an abort with no exception delivered.

After opt-in entry, if either DR7[11] = 0 OR IA32_DEBUGCTL[15] = 0, any #DB or #BP detected inside an RTM transaction region will just cause an abort with no exception delivered.

After opt-in entry, if DR7[11] = 1 AND IA32_DEBUGCTL[15] = 1, any #DB or #BP detected inside an RTM translation will

- terminate speculative execution,
- set RIP to the address of the XBEGIN instruction, and
- be delivered as #DB (implying an Intel SGX AEX; any #BP is converted to #DB).
- DR6[16] will be cleared, indicating RTM debug (if the #DB causes a VM exit, DR6 is not modified but bit 16 of the pending debug exceptions field in the VMCS will be set).

39.14 INTEL® SGX INTERACTIONS WITH S STATES

Whenever an Intel SGX enabled processor enters S3-S5 state, enclaves are destroyed. This is due to the EPC being destroyed when power down occurs. It is the application runtime's responsibility to re-instantiate an enclave after a power transition for which the enclaves were destroyed.

39.15 INTEL® SGX INTERACTIONS WITH MACHINE CHECK ARCHITECTURE (MCA)

39.15.1 Interactions with MCA Events

All architecturally visible machine check events (#MC and CMCI) that are detected while inside an enclave cause an asynchronous enclave exit.

Any machine check exception (#MC) that occurs after Intel SGX is first enables causes Intel SGX to be disabled, (CPUID.SGX_Leaf.0:EAX[SGX1] == 0). It cannot be enabled until after the next reset.

39.15.2 Machine Check Enables (IA32_MCi_CTL)

All supported IA32_MCi_CTL bits for all the machine check banks must be set for Intel SGX to be available (CPUID.SGX_Leaf.0:EAX[SGX1] == 1). Any act of clearing bits from '1 to '0 in any of the IA32_MCi_CTL register may disable Intel SGX (set CPUID.SGX_Leaf.0:EAX[SGX1] to 0) until the next reset.

39.15.3 CR4.MCE

CR4.MCE can be set or cleared with no interactions with Intel SGX.

39.16 INTEL® SGX INTERACTIONS WITH PROTECTED MODE VIRTUAL INTERRUPTS

ENCLS[EENTER] modifies neither EFLAGS.VIP nor EFLAGS.VIF.

ENCLS[ERESUME] loads EFLAGS in a manner similar to that of an execution of IRET with CPL = 3. This means that ERESUME modifies neither EFLAGS.VIP nor EFLAGS.VIF regardless of the value of the EFLAGS image in the SSA frame.

AEX saves EFLAGS.VIP and EFLAGS.VIF unmodified into the EFLAGS image in the SSA frame. AEX modifies neither EFLAGS.VIP nor EFLAGS.VIF after saving EFLAGS.

If CR4.PVI = 1, CPL = 3, EFLAGS.VM = 0, IOPL < 3, EFLAGS.VIP = 1, and EFLAGS.VIF = 0, execution of STI causes a #GP fault. In this case, STI modifies neither EFLAGS.IF nor EFLAGS.VIF. This behavior applies without change within an enclave (where CPL is always 3). Note that, if IOPL = 3, STI always sets EFLAGS.IF without fault; CR4.PVI, EFLAGS.VIP, and EFLAGS.VIF are neither consulted nor modified in this case.

39.17 INTEL SGX INTERACTION WITH PROTECTION KEYS

SGX interactions with PKRU are as follows:

- CPUID.(EAX=12H, ECX=1):ECX.PKRU indicates whether SECS.ATTRIBUTES.XFRM.PKRU can be set. If SECS.ATTRIBUTES.XFRM.PKRU is set, then PKRU is saved and cleared as part of AEX and is restored as part of ERESUME. If CR4.PKE is set, an enclave can execute RDPKRU and WRKRU independent of whether SECS.ATTRIBUTES.XFRM.PKRU is set.

SGX interactions with domain permission checks are as follows:

1) If CR4.PKE is not set, then legacy and SGX permission checks are not effected.
2) If CR4.PKE is set, then domain permission checks are applied to all non-enclave access and enclave accesses to user pages in addition to legacy and SGX permission checks at a higher priority than SGX permission checks.
3) Implicit accesses aren't subject to domain permission checks.

CHAPTER 40
ENCLAVE CODE DEBUG AND PROFILING

Intel® SGX is architected to provide protection for production enclaves and permit enclave code developers to use an SGX-aware debugger to effectively debug a non-production enclave (debug enclave). Intel SGX also allows a non-SGX-aware debugger to debug non-enclave portions of the application without getting confused by enclave instructions.

40.1 CONFIGURATION AND CONTROLS

40.1.1 Debug Enclave vs. Production Enclave

The SECS of each enclave provides a bit, SECS.ATTRIBUTES.DEBUG, indicating whether the enclave is a debug enclave (if set) or a production enclave (if 0). If this bit is set, software outside the enclave can use EDBGRD/EDBGWR to access the EPC memory of the enclave. The value of DEBUG is not included in the measurement of the enclave and therefore doesn't require an alternate SIGSTRUCT to be generated to debug the enclave.

The ATTRIBUTES field in the SECS is reported in the enclave's attestation, and is included in the key derivation. Enclave secrets that were protected by the enclave using Intel SGX keys when it ran as a production enclave will not be accessible by the debug enclave. A debugger needs to be aware that special debug content might be required for a debug enclave to run in a meaningful way.

EPC memory belonging to a debug enclave can be accessed via the EDBGRD/EDBGWR leaf functions (see Section 38.4), while that belonging to a non-debug enclave cannot be accessed by these leaf functions.

40.1.2 Tool-Chain Opt-in

The TCS.FLAGS.DBGOPTIN bit controls interactions of certain debug and profiling features with enclaves, including code/data breakpoints, TF, RF, monitor trap flag, BTF, LBRs, BTM, BTS, Intel Processor Trace, and performance monitoring. This bit is forced to zero when EPC pages are added via EADD. A debugger can set this bit via EDBGWR to the TCS of a debug enclave.

An enclave entry through a TCS with the TCS.FLAGS.DBGOPTIN set to 0 is called an **opt-out entry**. Conversely, an enclave entry through a TCS with TCS.FLAGS.DBGOPTIN set to 1 is called an **opt-in entry**.

40.2 SINGLE STEP DEBUG

40.2.1 Single Stepping ENCLS Instruction Leafs

If the RFLAGS.TF bit is set at the beginning of ENCLS, then a single-step debug exception is pending as a trap-class exception on the instruction boundary immediately after the ENCLS instruction. Additionally, if the instruction is executed in VMX non-root operation and the "monitor trap flag" VM-execution control is 1, an MTF VM exit is pending on the instruction boundary immediately after the instruction if the instruction does not fault.

40.2.2 Single Stepping ENCLU Instruction Leafs

The interactions of the unprivileged Intel SGX instruction ENCLU are leaf dependent.

An enclave entry via EENTER/ERESUME leaf functions of the ENCLU, in certain cases, may mask the RFLAGS.TF bit, and mask the setting of the "monitor trap flag" VM-execution control. In such situations, an exit from the enclave, either via the EEXIT leaf function or via an AEX unmasks the RFLAGS.TF bit and the "monitor trap flag" VM-execu-

tion control. The details of this masking/unmasking and the pending of single stepping events across EENTER/ERESUME/EEXIT/AEX are covered in detail in Section 40.2.3.

If the EFLAGS.TF bit is set at the beginning of EREPORT or EGETKEY leafs, and if the EFLAGS.TF is not masked by the preceding enclave entry, then a single-step debug exception is pending on the instruction boundary immediately after the ENCLU instruction. Additionally, if the instruction is executed in VMX non-root operation and the "monitor trap flag" VM-execution control is 1, and if the monitor trap flag is not masked by the preceding enclave entry, then an MTF VM exit is pending on the instruction boundary immediately after the instruction.

If the instruction under consideration results in a fault, then the control flow goes to the fault handler, and no single-step debug exception is asserted. In such a situation, if the instruction is executed in VMX non-root operation and the "monitor trap flag" VM-execution control is 1, an MTF VM exit is pending after the delivery of the fault (or any nested exception). No MTF VM exit occurs if another VM exit occurs before reaching that boundary on which an MTF VM exit would be pending.

40.2.3 Single-Stepping Enclave Entry with Opt-out Entry

40.2.3.1 Single Stepping without AEX

Figure 40-1 shows the most common case for single-stepping after an opt-out entry.

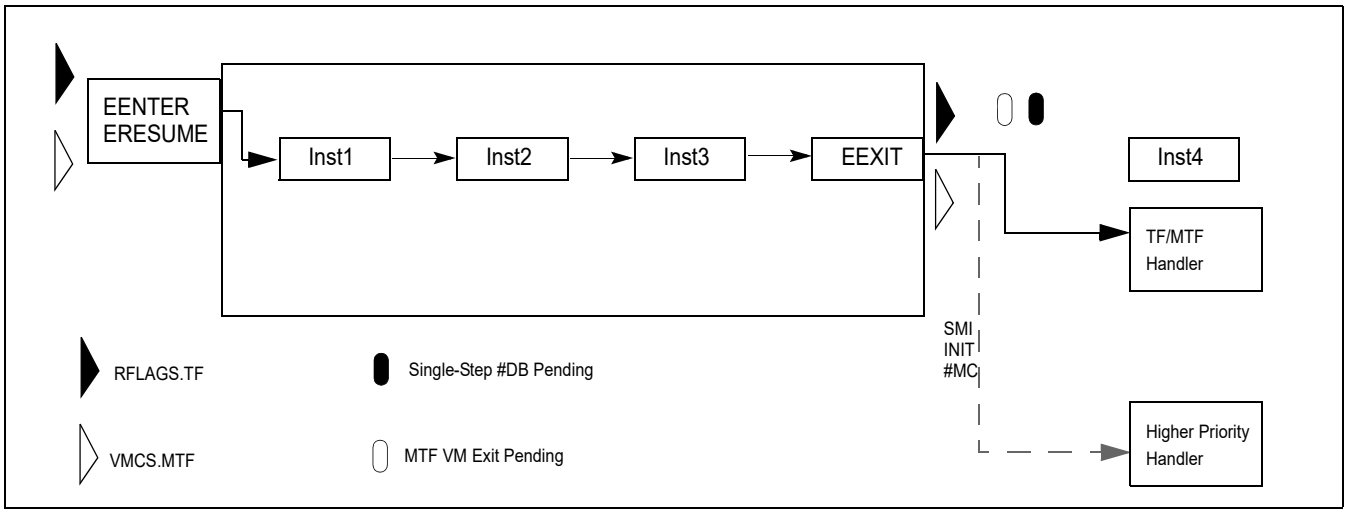

Figure 40-1. Single Stepping with Opt-out Entry - No AEX

In this scenario, if the RFLAGS.TF bit is set at the time of the enclave entry, then a single step debug exception is pending on the instruction boundary after EEXIT. Additionally, if the enclave is executing in VMX non-root operation and the "monitor trap flag" VM-execution control is 1, an MTF VM exit is pending on the instruction boundary after EEXIT.

The value of the RFLAGS.TF bit at the end of EEXIT is the same as the value of RFLAGS.TF at the time of the enclave entry.

40.2.3.2 Single Step Preempted by AEX Due to Non-SMI Event

Figure 40-2 shows the interaction of single stepping with AEX due to a non-SMI event after an opt-out entry.

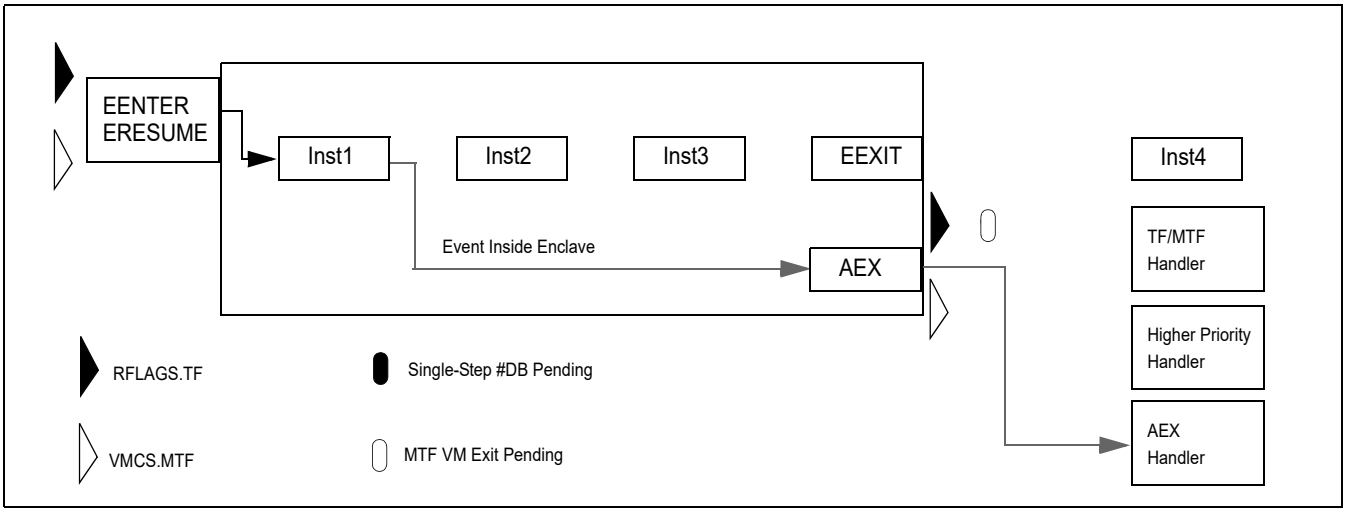

Figure 40-2. Single Stepping with Opt-out Entry -AEX Due to Non-SMI Event Before Single-Step Boundary

In this scenario, if the enclave is executing in VMX non-root operation and the "monitor trap flag" VM-execution control is 1, an MTF VM exit is pending on the instruction boundary after the AEX. No MTF VM exit occurs if another VM exit happens before reaching that instruction boundary.

The value of the RFLAGS.TF bit at the end of AEX is the same as the value of RFLAGS.TF at the time of the enclave entry.

40.2.4 RFLAGS.TF Treatment on AEX

The value of EFLAGS.TF at the end of AEX from an opt-out enclave is same as the value of EFLAGS.TF at the time of the enclave entry. The value of EFLAGS.TF at the end of AEX from an opt-in enclave is unmodified. The EFLAGS.TF saved in GPR portion of the SSA on an AEX is 0. For more detail see EENTER and ERESUME in Chapter 5.

40.2.5 Restriction on Setting of TF after an Opt-Out Entry

Enclave entered through an opt-out entry is not allowed to set EFLAGS.TF. The POPF instruction forces RFLAGS.TF to 0 if the enclave was entered through opt-out entry.

40.2.6 Trampoline Code Considerations

Any AEX from the enclave which results in the RFLAGS.TF =1 on the reporting stack will result in a single-step #DB after the first instruction of the trampoline code if the trampoline is entered using the IRET instruction.

40.3 CODE AND DATA BREAKPOINTS

40.3.1 Breakpoint Suppression

Following an opt-out entry:

- Instruction breakpoints are suppressed during execution in an enclave.
- Data breakpoints are not triggered on accesses to the address range defined by ELRANGE.
- Data breakpoints are triggered on accesses to addresses outside the ELRANGE

Following an opt-in entry instruction and data breakpoints are not suppressed.

The processor does not report any matches on debug breakpoints that are suppressed on enclave entry. However, the processor does not clear any bits in DR6 that were already set at the time of the enclave entry.

40.3.2 Reporting of Instruction Breakpoint on Next Instruction on a Debug Trap

A debug exception caused by the single-step execution mode or when a data breakpoint condition was met causes the processor to perform an AEX. Following such an AEX, the processor reports in the debug status register (DR6) matches of the new instruction pointer (the AEP address) in a breakpoint address register setup to detect instruction execution.

40.3.3 RF Treatment on AEX

RF flag value saved in SSA is the same as what would have been pushed on stack if the exception or event causing the AEX occurred when executing outside an enclave (see Section 18.3.1.1). Following an AEX, the RF flag is 0 in the synthetic state.

40.3.4 Breakpoint Matching in Intel® SGX Instruction Flows

Implicit accesses made by Intel SGX instructions to EPC regions do not trigger data breakpoints. Explicit accesses made by ENCLS[ECREATE], ENCLS[EADD], ENCLS[EEXTEND], ENCLS[EINIT], ENCLS[EREMOVE], ENCLS[ETRACK], ENCLS[EBLOCK], ENCLS[EPA], ENCLS[EWB], ENCLS[ELD], ENCLS[EDBGRD], ENCLS[EDBGWR], ENCLU[EENTER], and ENCLU[ERESUME] to the EPC operands do not trigger data breakpoints.

Explicit accesses made by the Intel SGX instructions (ENCLU[EGETKEY] and ENCLU[EREPORT]) executed by an enclave following an opt-in entry, trigger data breakpoints on accesses to their EPC operands. All Intel SGX instructions trigger data breakpoints on accesses to their non-EPC operands.

40.4 CONSIDERATION OF THE INT1 AND INT3 INSTRUCTIONS

This section considers the operation of the INT1 and INT3 instructions when executed inside an enclave. These are the instructions with opcodes F1 and CC, respectively, and not INT *n* (with opcode CD) with value 1 or 3 for n.

40.4.1 Behavior of INT1 and INT3 Inside an Enclave

An execution of either INT1 or INT3 inside an enclave results in a fault-class exception. Following an opt-out entry, execution of either instruction results in an invalid-opcode exception (#UD). Following opt-in entry, INT1 results in a debug exception (#DB) and INT3 delivers a breakpoint exception (#BP). The normal requirement for INT3 (that the CPL not be greater than the DPL of descriptor 3 in the IDT) is not enforced.

Because execution of INT1 or INT3 inside an enclave results in a fault, the RIP saved in the SSA on AEX references the INT1 or INT3 instruction (and not the following instruction). The RIP value saved on the stack (or in the TSS or VMCS) is that of the AEP.

If execution of INT1 or INT3 inside an enclave causes a VM exit, the event type in the VM-exit interruption information field indicates a hardware exception (type 3),[1] and the VM-exit instruction length field is saved as zero.

40.4.2 Debugger Considerations

A debugger using INT3 inside an enclave should account for the modified behavior described in Section 40.4.1. Because INT3 is fault-like inside an enclave, the RIP saved in the SSA on AEX is that of the INT3 instruction. Conse-

1. INT1 would normally indicate a privileged software exception (type 5), and INT3 would normally indicate a software exception (type 6).

quently, the debugger must not decrement SSA.RIP for #BP coming from an enclave to re-execute the instruction at the RIP of the INT3 instruction on a subsequent enclave entry.

40.4.3 VMM Considerations

As described in Section 40.4.1, execution of INT3 inside an enclave delivers #BP with "interruption type" of 3. A VMM that re-injects #BP into the guest should establish the VM-entry interruption information field using data saved into the appropriate VMCS fields by the VM exit incident to the #BP (as recommended in *Intel® 64 and IA-32 Architectures Software Developer's Manual, Volume 3C*).

VMMs that create the VM-entry interruption information based solely on the exception vector should take care to use event type 3 (instead of 6) when they detect a VM exit incident to enclave mode that is due to an exception with vector 3.

40.5 BRANCH TRACING

40.5.1 BTF Treatment

When software enables single-stepping on branches then:

- Following an opt-in entry using EENTER the processor generates a single step debug exception.
- Following an EEXIT the processor generates a single-step debug exception

Enclave entry using ERESUME (opt-in or opt-out) and an AEX from the enclave do not cause generation of the single-step debug exception.

40.5.2 LBR Treatment

40.5.2.1 LBR Stack on Opt-in Entry

Following an opt-in entry into an enclave, last branch recording facilities if enabled continued to store branch records in the LBR stack MSRs as follows:

- On enclave entry using EENTER/ERESUME, the processor push the address of EENTER/ERESUME instruction into MSR_LASTBRANCH_n_FROM_IP, and the destination address of the EENTER/ERESUME into MSR_LASTBRANCH_n_TO_IP.
- On EEXIT, the processor pushes the address of EEXIT instruction into MSR_LASTBRANCH_n_FROM_IP, and the address of EEXIT destination into MSR_LASTBRANCH_n_TO_IP.
- On AEX, the processor pushes RIP saved in the SSA into MSR_LASTBRANCH_n_FROM_IP, and the address of AEP into MSR_LASTBRANCH_n_TO_IP.
- For every branch inside the enclave, a branch record is pushed on the LBR stack.

Figure 40-3 shows an example of LBR stack manipulation after an opt-in entry. Every arrow in this picture indicates a branch record pushed on the LBR stack. The "From IP" of the branch record contains the linear address of the instruction located at the start of the arrow, while the "To IP" of the branch record contains the linear address of the instruction at the end of the arrow.

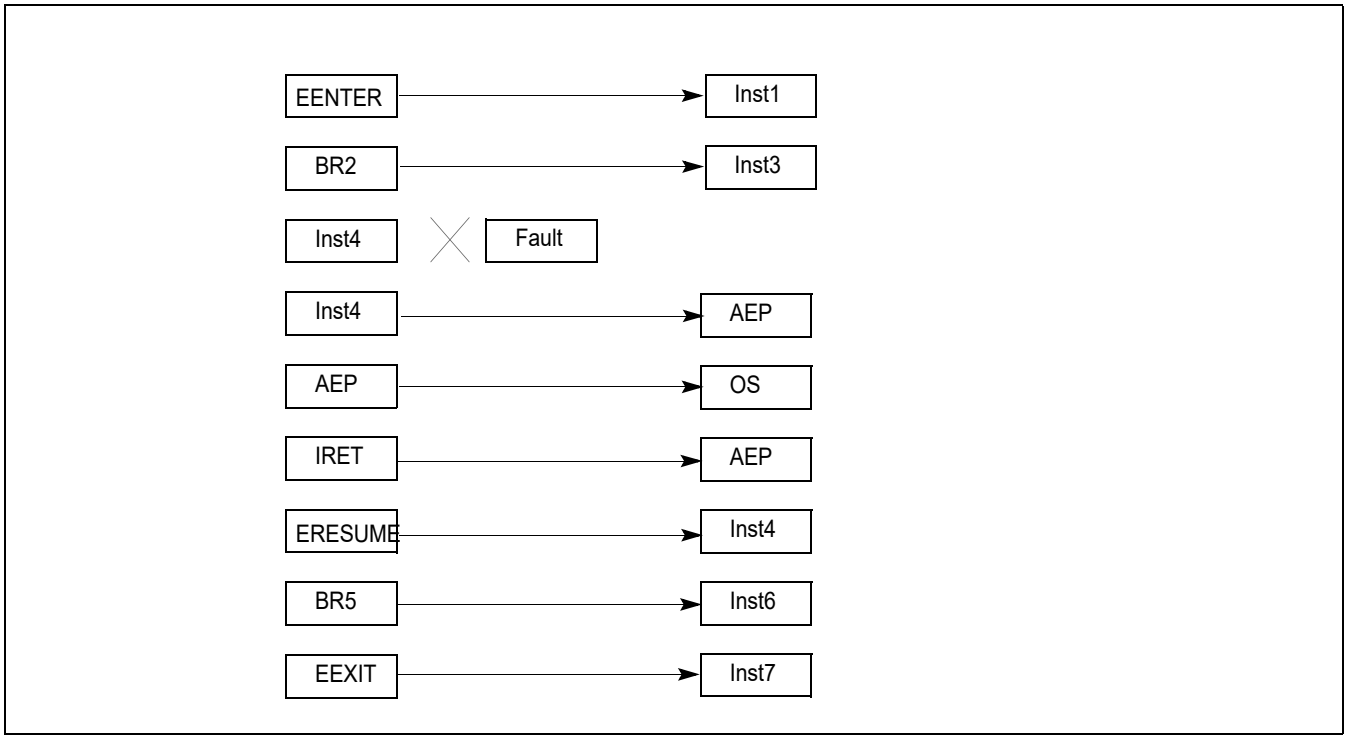

Figure 40-3. LBR Stack Interaction with Opt-in Entry

40.5.2.2 LBR Stack on Opt-out Entry

An opt-out entry into an enclave suppresses last branch recording facilities, and enclave exit after an opt-out entry un-suppresses last branch recording facilities.

Opt-out entry into an enclave does not push any record on LBR stack.

If last branch recording facilities were enabled at the time of enclave entry, then EEXIT following such an enclave entry pushes one record on LBR stack. The MSR_LASTBRANCH_n_FROM_IP of such record holds the linear address of the instruction (EENTER or ERESUME) that was used to enter the enclave, while the MSR_LASTBRANCH_n_TO_IP of such record holds linear address of the destination of EEXIT.

Additionally, if last branch recording facilities were enabled at the time of enclave entry, then an AEX after such an entry pushes one record on LBR stack, before pushing record for the event causing the AEX if the event pushes a record on LBR stack. The MSR_LASTBRANCH_n_FROM_IP of the new record holds linear address of the instruction (EENTER or ERESUME) that was used to enter the enclave, while MSR_LASTBRANCH_n_TO_IP of the new record holds linear address of the AEP. If the event causing AEX pushes a record on LBR stack, then the MSR_LASTBRANCH_n_FROM_IP for that record holds linear address of the AEP.

Figure 40-4 shows an example of LBR stack manipulation after an opt-out entry. Every arrow in this picture indicates a branch record pushed on the LBR stack. The “From IP” of the branch record contains the linear address of the instruction located at the start of the arrow, while the “To IP” of the branch record contains the linear address of the instruction at the end of the arrow.

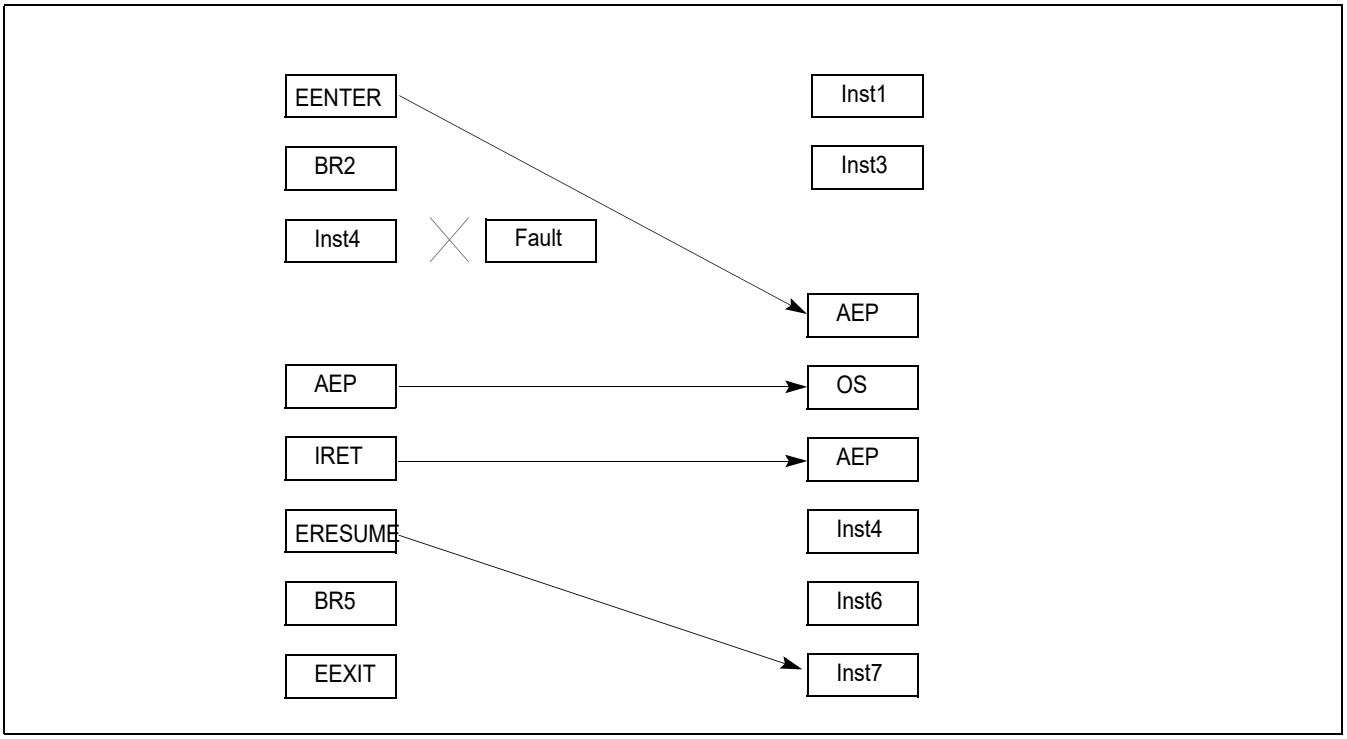

Figure 40-4. LBR Stack Interaction with Opt-out Entry

40.5.2.3 Mispredict Bit, Record Type, and Filtering

All branch records resulting from Intel SGX instructions/AEXs are reported as predicted branches, and consequently, bit 63 of MSR_LASTBRANCH_n_FROM_IP for such records is set. Branch records due to these Intel SGX operations are always non-HLE/non-RTM records.

EENTER, ERESUME, EEXIT, and AEX are considered to be far branches. Consequently, bit 8 in MSR_LBR_SELECT controls filtering of the new records introduced by Intel SGX.

40.6 INTERACTION WITH PERFORMANCE MONITORING

40.6.1 IA32_PERF_GLOBAL_STATUS Enhancement

On processors supporting Intel SGX, the IA32_PERF_GLOBAL_STATUS MSR provides a bit indicator, known as "Anti Side-channel Interference" (ASCI) at bit position 60. If this bit is 0, the performance monitoring data in various performance monitoring counters are accumulated normally as defined by relevant architectural/microarchitectural conditions. If the ASCI bit is set, the contents in various performance monitoring counters can be affected by the direct or indirect consequence of Intel SGX protection of enclave code executing in the processor.

40.6.2 Performance Monitoring with Opt-in Entry

An opt-in enclave entry allow performance monitoring logic to observe the contribution of enclave code executing in the processor. Thus the contents of performance monitoring counters does not distinguish between contribution originating from enclave code or otherwise. All counters, events, precise events, etc. continue to work as defined in the IA32/Intel 64 Software Developer Manual. Consequently, bit 60 of IA32_PERF_GLOBAL_STATUS MSR is not set.

40.6.3 Performance Monitoring with Opt-out Entry

In general, performance monitoring activities are suppressed when entering an opt-out enclave. This applies to all thread-specific, configured performance monitoring, except for the cycle-counting fixed counter, IA32_FIXED_CTR1 and IA32_FIXED_CTR2. Upon entering an opt-out enclave, IA32_FIXED_CTR0, IA32_PMCx will stop accumulating counts. Additionally, if PEBS is configured to capture PEBS record for this thread, PEBS record generation will also be suppressed. Consequently, bit 60 of IA32_PERF_GLOBAL_STATUS MSR is set.

Performance monitoring on the sibling thread may also be affected. Any one of IA32_FIXED_CTRx or IA32_PMCx on the sibling thread configured to monitor thread-specific eventing logic with AnyThread =1 is demoted to count only MyThread while an opt-out enclave is executing on the other thread.

40.6.4 Enclave Exit and Performance Monitoring

When a logical processor exits an enclave, either via ENCLU[EEXIT] or via AEX, all performance monitoring activity (including PEBS) on that logical processor that was suppressed is unsuppressed.

Any counters that were demoted from AnyThread to MyThread on the sibling thread are promoted back to AnyThread.

40.6.5 PEBS Record Generation on Intel® SGX Instructions

All leaf functions of the ENCLS instruction report "Eventing RIP" of the ENCLS instruction if a PEBS record is generated at the end of the instruction execution. Additionally, the EGETKEY and EREPORT leaf functions of the ENCLU instruction report "Eventing RIP" of the ENCLU instruction if a PEBS record is generated at the end of the instruction execution.

If the EENTER and ERESUME leaf functions are performing an opt-in entry report "Eventing RIP" of the ENCLU instruction if a PEBS record is generated at the end of the instruction execution. On the other hand, if these leaf functions are performing an opt-out entry, then these leaf functions result in PEBS being suppressed, and no PEBS record is generated at the end of these instructions.

A PEBS record is generated if there is a PEBS event pending at the end of EEXIT (due to a counter overflowing during enclave execution or during EEXIT execution). This PEBS record contains the architectural state of the logical processor at the end of EEXIT. If the enclave was entered via an opt-in entry, then this record reports the "Eventing RIP" as the linear address of the ENCLU[EEXIT] instruction. If the enclave was entered via an opt-out entry, then the record reports the "Eventing RIP" as the linear address of the ENCLU[EENTER/ERESUME] instruction that performed the last enclave entry.

A PEBS record is generated after the AEX if there is a PEBS event pending at the end of AEX (due to a counter overflowing during enclave execution or during AEX execution). This PEBS record contains the synthetic state of the logical processor that is established at the end of AEX. For opt-in entry, this record has the EVENTING_RIP set to the RIP saved in the SSA. For opt-out entry, the record has the EVENTING_RIP set to the linear address of EENTER/ERESUME used for the last enclave entry.

If the enclave was entered via an opt-in entry, then this record reports the "Eventing RIP" as the linear address in the SSA of the enclave (a.k.a., the "Eventing LIP" inside the enclave). If the enclave was entered via an opt-out entry, then the record reports the "Eventing RIP" as the linear address of the ENCLU[EENTER/ERESUME] instruction that performed the last enclave entry.

A second PEBS event may be pended during the Enclave Exiting Event (EEE). If the PEBS event is taken at the end of delivery of the EEE then the "Eventing RIP" in this second PEBS record is the linear address of the AEP.

40.6.6 Exception-Handling on PEBS/BTS Loads/Stores after AEX

As noted in Section 18.4.9.2, recording in the BTS buffer or in the PEBS buffer may not operate properly if accesses to any of the DS save area sections cause page faults or VM exits. Such page faults or VM exits, if they occur, are delivered immediately to the OS or VMM, and generation of a BTS or PEBS record is skipped and may leave the buffers in a state where they have a partial BTS or PEBS records.

However, any events that are detected during PEBS/BTS record generation at the end of AEX and before delivering the Enclave Exiting Event (EEE) cannot be reported immediately to the OS/VMM, as an event window is not open at

the end of AEX. Consequently, fault-like events such as page faults, EPT faults, EPT mis-configuration, and accesses to APIC-access page detected on stores to the PEBS/BTS buffer are not reported, and generation of the PEBS and/or BTS record at the end of AEX is aborted (this may leave the buffers in a state where they have partial PEBS or BTS records). Trap-like events detected on stores to the PEBS/BTS buffer (such as debug traps) are pended until the next instruction boundary, where they are handled according to the architecturally defined priority. The processor continues the handling of the Enclave Exiting Event (SMI, NMI, interrupt, exception delivery, VM exit, etc.) after aborting the PEBS/BTS record generation.

40.6.6.1 Other Interactions with Performance Monitoring

For opt-in entry, EENTER, ERESUME, EEXIT, and AEX are all treated as predicted far branches, and any counters that are counting such branches are incremented by 1 as a part of retirement of these instructions. Retirement of these instructions is also counted in any counters configured to count instructions retired.

For opt-out entry, execution inside an enclave is treated as a single predicted branch, and all branch-counting performance monitoring counters are incremented accordingly. Additionally, such execution is also counted as a single instruction, and all performance monitoring counters counting instructions are incremented accordingly.

Enclave entry does not affect any performance monitoring counters shared between cores.

APPENDIX A
VMX CAPABILITY REPORTING FACILITY

The ability of a processor to support VMX operation and related instructions is indicated by CPUID.1:ECX.VMX[bit 5] = 1. A value 1 in this bit indicates support for VMX features.

Support for specific features detailed in Chapter 27 and other VMX chapters is determined by reading values from a set of capability MSRs. These MSRs are indexed starting at MSR address 480H. VMX capability MSRs are read-only; an attempt to write them (with WRMSR) produces a general-protection exception (#GP(0)). They do not exist on processors that do not support VMX operation; an attempt to read them (with RDMSR) on such processors produces a general-protection exception (#GP(0)).

A.1 BASIC VMX INFORMATION

The IA32_VMX_BASIC MSR (index 480H) consists of the following fields:

- Bits 30:0 contain the 31-bit VMCS revision identifier used by the processor. Processors that use the same VMCS revision identifier use the same size for VMCS regions (see subsequent item on bits 44:32).[1]
- Bit 31 is always 0.
- Bits 44:32 report the number of bytes that software should allocate for the VMXON region and any VMCS region. It is a value greater than 0 and at most 4096 (bit 44 is set if and only if bits 43:32 are clear).
- Bit 48 indicates the width of the physical addresses that may be used for the VMXON region, each VMCS, and data structures referenced by pointers in a VMCS (I/O bitmaps, virtual-APIC page, MSR areas for VMX transitions). If the bit is 0, these addresses are limited to the processor's physical-address width.[2] If the bit is 1, these addresses are limited to 32 bits. This bit is always 0 for processors that support Intel 64 architecture.
- If bit 49 is read as 1, the logical processor supports the dual-monitor treatment of system-management interrupts and system-management mode. See Section 32.15 for details of this treatment.
- Bits 53:50 report the memory type that should be used for the VMCS, for data structures referenced by pointers in the VMCS (I/O bitmaps, virtual-APIC page, MSR areas for VMX transitions), and for the MSEG header. If software needs to access these data structures (e.g., to modify the contents of the MSR bitmaps), it can configure the paging structures to map them into the linear-address space. If it does so, it should establish mappings that use the memory type reported bits 53:50 in this MSR.[3]

  As of this writing, all processors that support VMX operation indicate the write-back type. The values used are given in Table A-1.

Table A-1. Memory Types Recommended for VMCS and Related Data Structures

Value(s)	Field
0	Uncacheable (UC)
1–5	Not used
6	Write Back (WB)
7–15	Not used

1. Earlier versions of this manual specified that the VMCS revision identifier was a 32-bit field in bits 31:0 of this MSR. For all processors produced prior to this change, bit 31 of this MSR was read as 0.
2. On processors that support Intel 64 architecture, the pointer must not set bits beyond the processor's physical address width.
3. Alternatively, software may map any of these regions or structures with the UC memory type. (This may be necessary for the MSEG header.) Doing so is discouraged unless necessary as it will cause the performance of software accesses to those structures to suffer.

- If bit 54 is read as 1, the processor reports information in the VM-exit instruction-information field on VM exits due to execution of the INS and OUTS instructions (see Section 28.2.5). This reporting is done only if this bit is read as 1.
- Bit 55 is read as 1 if any VMX controls that default to 1 may be cleared to 0. See Appendix A.2 for details. It also reports support for the VMX capability MSRs IA32_VMX_TRUE_PINBASED_CTLS, IA32_VMX_TRUE_PROCBASED_CTLS, IA32_VMX_TRUE_EXIT_CTLS, and IA32_VMX_TRUE_ENTRY_CTLS. See Appendix A.3.1, Appendix A.3.2, Appendix A.4, and Appendix A.5 for details.
- If bit 56 is read as 1, software can use VM entry to deliver a hardware exception with or without an error code, regardless of vector (see Section 27.2.1.3).
- The values of bits 47:45 and bits 63:57 are reserved and are read as 0.

A.2 RESERVED CONTROLS AND DEFAULT SETTINGS

As noted in Chapter 27, "VM Entries", certain VMX controls are reserved and must be set to a specific value (0 or 1) determined by the processor. The specific value to which a reserved control must be set is its **default setting**. Software can discover the default setting of a reserved control by consulting the appropriate VMX capability MSR (see Appendix A.3 through Appendix A.5).

Future processors may define new functionality for one or more reserved controls. Such processors would allow each newly defined control to be set either to 0 or to 1. Software that does not desire a control's new functionality should set the control to its default setting. For that reason, it is useful for software to know the default settings of the reserved controls.

Default settings partition the various controls into the following classes:

- **Always-flexible**. These have never been reserved.
- **Default0**. These are (or have been) reserved with a default setting of 0.
- **Default1**. They are (or have been) reserved with a default setting of 1.

As noted in Appendix A.1, a logical processor uses bit 55 of the IA32_VMX_BASIC MSR to indicate whether any of the default1 controls may be 0:

- If bit 55 of the IA32_VMX_BASIC MSR is read as 0, all the default1 controls are reserved and must be 1. VM entry will fail if any of these controls are 0 (see Section 27.2.1).
- If bit 55 of the IA32_VMX_BASIC MSR is read as 1, not all the default1 controls are reserved, and some (but not necessarily all) may be 0. The CPU supports four (4) new VMX capability MSRs: IA32_VMX_TRUE_PINBASED_CTLS, IA32_VMX_TRUE_PROCBASED_CTLS, IA32_VMX_TRUE_EXIT_CTLS, and IA32_VMX_TRUE_ENTRY_CTLS. See Appendix A.3 through Appendix A.5 for details. (These MSRs are not supported if bit 55 of the IA32_VMX_BASIC MSR is read as 0.)

A.3 VM-EXECUTION CONTROLS

There are separate capability MSRs for the pin-based VM-execution controls, the primary processor-based VM-execution controls, the secondary processor-based VM-execution controls, and the tertiary processor-based VM-execution controls. These are described in Appendix A.3.1, Appendix A.3.2, Appendix A.3.3, and Appendix A.3.4, respectively.

A.3.1 Pin-Based VM-Execution Controls

The IA32_VMX_PINBASED_CTLS MSR (index 481H) reports on the allowed settings of **most** of the pin-based VM-execution controls (see Section 25.6.1):

- Bits 31:0 indicate the **allowed 0-settings** of these controls. VM entry allows control X (bit X of the pin-based VM-execution controls) to be 0 if bit X in the MSR is cleared to 0; if bit X in the MSR is set to 1, VM entry fails if control X is 0.

Exceptions are made for the pin-based VM-execution controls in the default1 class (see Appendix A.2). These are bits 1, 2, and 4; the corresponding bits of the IA32_VMX_PINBASED_CTLS MSR are always read as 1. The treatment of these controls by VM entry is determined by bit 55 in the IA32_VMX_BASIC MSR:

— If bit 55 in the IA32_VMX_BASIC MSR is read as 0, VM entry fails if any pin-based VM-execution control in the default1 class is 0.

— If bit 55 in the IA32_VMX_BASIC MSR is read as 1, the IA32_VMX_TRUE_PINBASED_CTLS MSR (see below) reports which of the pin-based VM-execution controls in the default1 class can be 0 on VM entry.

- Bits 63:32 indicate the **allowed 1-settings** of these controls. VM entry allows control X to be 1 if bit 32+X in the MSR is set to 1; if bit 32+X in the MSR is cleared to 0, VM entry fails if control X is 1.

If bit 55 in the IA32_VMX_BASIC MSR is read as 1, the IA32_VMX_TRUE_PINBASED_CTLS MSR (index 48DH) reports on the allowed settings of **all** of the pin-based VM-execution controls:

- Bits 31:0 indicate the allowed 0-settings of these controls. VM entry allows control X to be 0 if bit X in the MSR is cleared to 0; if bit X in the MSR is set to 1, VM entry fails if control X is 0. There are no exceptions.
- Bits 63:32 indicate the allowed 1-settings of these controls. VM entry allows control X to be 1 if bit 32+X in the MSR is set to 1; if bit 32+X in the MSR is cleared to 0, VM entry fails if control X is 1.

It is necessary for software to consult only one of the capability MSRs to determine the allowed settings of the pin-based VM-execution controls:

- If bit 55 in the IA32_VMX_BASIC MSR is read as 0, all information about the allowed settings of the pin-based VM-execution controls is contained in the IA32_VMX_PINBASED_CTLS MSR. (The IA32_VMX_TRUE_PINBASED_CTLS MSR is not supported.)
- If bit 55 in the IA32_VMX_BASIC MSR is read as 1, all information about the allowed settings of the pin-based VM-execution controls is contained in the IA32_VMX_TRUE_PINBASED_CTLS MSR. Assuming that software knows that the default1 class of pin-based VM-execution controls contains bits 1, 2, and 4, there is no need for software to consult the IA32_VMX_PINBASED_CTLS MSR.

A.3.2 Primary Processor-Based VM-Execution Controls

The IA32_VMX_PROCBASED_CTLS MSR (index 482H) reports on the allowed settings of **most** of the primary processor-based VM-execution controls (see Section 25.6.2):

- Bits 31:0 indicate the allowed 0-settings of these controls. VM entry allows control X (bit X of the primary processor-based VM-execution controls) to be 0 if bit X in the MSR is cleared to 0; if bit X in the MSR is set to 1, VM entry fails if control X is 0.

  Exceptions are made for the primary processor-based VM-execution controls in the default1 class (see Appendix A.2). These are bits 1, 4–6, 8, 13–16, and 26; the corresponding bits of the IA32_VMX_PROCBASED_CTLS MSR are always read as 1. The treatment of these controls by VM entry is determined by bit 55 in the IA32_VMX_BASIC MSR:

  — If bit 55 in the IA32_VMX_BASIC MSR is read as 0, VM entry fails if any of the primary processor-based VM-execution controls in the default1 class is 0.

  — If bit 55 in the IA32_VMX_BASIC MSR is read as 1, the IA32_VMX_TRUE_PROCBASED_CTLS MSR (see below) reports which of the primary processor-based VM-execution controls in the default1 class can be 0 on VM entry.

- Bits 63:32 indicate the allowed 1-settings of these controls. VM entry allows control X to be 1 if bit 32+X in the MSR is set to 1; if bit 32+X in the MSR is cleared to 0, VM entry fails if control X is 1.

If bit 55 in the IA32_VMX_BASIC MSR is read as 1, the IA32_VMX_TRUE_PROCBASED_CTLS MSR (index 48EH) reports on the allowed settings of **all** of the primary processor-based VM-execution controls:

- Bits 31:0 indicate the allowed 0-settings of these controls. VM entry allows control X to be 0 if bit X in the MSR is cleared to 0; if bit X in the MSR is set to 1, VM entry fails if control X is 0. There are no exceptions.
- Bits 63:32 indicate the allowed 1-settings of these controls. VM entry allows control X to be 1 if bit 32+X in the MSR is set to 1; if bit 32+X in the MSR is cleared to 0, VM entry fails if control X is 1.

It is necessary for software to consult only one of the capability MSRs to determine the allowed settings of the primary processor-based VM-execution controls:

- If bit 55 in the IA32_VMX_BASIC MSR is read as 0, all information about the allowed settings of the primary processor-based VM-execution controls is contained in the IA32_VMX_PROCBASED_CTLS MSR. (The IA32_VMX_TRUE_PROCBASED_CTLS MSR is not supported.)
- If bit 55 in the IA32_VMX_BASIC MSR is read as 1, all information about the allowed settings of the primary processor-based VM-execution controls is contained in the IA32_VMX_TRUE_PROCBASED_CTLS MSR. Assuming that software knows that the default1 class of primary processor-based VM-execution controls contains bits 1, 4–6, 8, 13–16, and 26, there is no need for software to consult the IA32_VMX_PROCBASED_CTLS MSR.

A.3.3 Secondary Processor-Based VM-Execution Controls

The IA32_VMX_PROCBASED_CTLS2 MSR (index 48BH) reports on the allowed settings of the secondary processor-based VM-execution controls (see Section 25.6.2). The following items provide details, including enforcement by VM entry:

- Bits 31:0 indicate the allowed 0-settings of these controls. These bits are always 0. This fact indicates that VM entry allows each bit of the secondary processor-based VM-execution controls to be 0 (reserved bits must be 0)
- Bits 63:32 indicate the allowed 1-settings of these controls; the 1-setting is not allowed for any reserved bit. VM entry allows control X (bit X of the secondary processor-based VM-execution controls) to be 1 if bit 32+X in the MSR is set to 1; if bit 32+X in the MSR is cleared to 0, VM entry fails if control X and the "activate secondary controls" primary processor-based VM-execution control are both 1.

The IA32_VMX_PROCBASED_CTLS2 MSR exists only on processors that support the 1-setting of the "activate secondary controls" VM-execution control (only if bit 63 of the IA32_VMX_PROCBASED_CTLS MSR is 1).

A.3.4 Tertiary Processor-Based VM-Execution Controls

The IA32_VMX_PROCBASED_CTLS3 MSR (index 492H) reports on the allowed 1-settings of the tertiary processor-based VM-execution controls (see Section 25.6.2); the 1-setting is not allowed for any reserved bit.

VM entry allows control X (bit X of the tertiary processor-based VM-execution controls) to be 1 if bit X in the MSR is set to 1; if bit X in the MSR is cleared to 0, VM entry fails if control X and the "activate tertiary controls" primary processor-based VM-execution control are both 1.

The IA32_VMX_PROCBASED_CTLS3 MSR exists only on processors that support the 1-setting of the "activate tertiary controls" VM-execution control (only if bit 49 of the IA32_VMX_PROCBASED_CTLS MSR is 1).

Notice that the organization of this MSR differs from that of IA32_VMX_PROCBASED_CTLS2 (Appendix A.3.3). This is because there are 64 tertiary processor-based VM-execution controls, while there were only 32 secondary processor-based VM-execution controls.

A.4 VM-EXIT CONTROLS

There are separate capability MSRs for the primary VM-exit controls and the secondary VM-exit controls. These are described in Appendix A.4.1 and Appendix A.4.2, respectively.

A.4.1 Primary VM-Exit Controls

The IA32_VMX_EXIT_CTLS MSR (index 483H) reports on the allowed settings of **most** of the primary VM-exit controls (see Section 25.7.1):

- Bits 31:0 indicate the allowed 0-settings of these controls. VM entry allows control X (bit X of the primary VM-exit controls) to be 0 if bit X in the MSR is cleared to 0; if bit X in the MSR is set to 1, VM entry fails if control X is 0.

Exceptions are made for the primary VM-exit controls in the default1 class (see Appendix A.2). These are bits 0–8, 10, 11, 13, 14, 16, and 17; the corresponding bits of the IA32_VMX_EXIT_CTLS MSR are always read as 1. The treatment of these controls by VM entry is determined by bit 55 in the IA32_VMX_BASIC MSR:

— If bit 55 in the IA32_VMX_BASIC MSR is read as 0, VM entry fails if any primary VM-exit control in the default1 class is 0.

— If bit 55 in the IA32_VMX_BASIC MSR is read as 1, the IA32_VMX_TRUE_EXIT_CTLS MSR (see below) reports which of the primary VM-exit controls in the default1 class can be 0 on VM entry.

- Bits 63:32 indicate the allowed 1-settings of these controls. VM entry allows control 32+X to be 1 if bit X in the MSR is set to 1; if bit 32+X in the MSR is cleared to 0, VM entry fails if control X is 1.

If bit 55 in the IA32_VMX_BASIC MSR is read as 1, the IA32_VMX_TRUE_EXIT_CTLS MSR (index 48FH) reports on the allowed settings of **all** of the primary VM-exit controls:

- Bits 31:0 indicate the allowed 0-settings of these controls. VM entry allows control X to be 0 if bit X in the MSR is cleared to 0; if bit X in the MSR is set to 1, VM entry fails if control X is 0. There are no exceptions.
- Bits 63:32 indicate the allowed 1-settings of these controls. VM entry allows control X to be 1 if bit 32+X in the MSR is set to 1; if bit 32+X in the MSR is cleared to 0, VM entry fails if control X is 1.

It is necessary for software to consult only one of the capability MSRs to determine the allowed settings of the primary VM-exit controls:

- If bit 55 in the IA32_VMX_BASIC MSR is read as 0, all information about the allowed settings of the primary VM-exit controls is contained in the IA32_VMX_EXIT_CTLS MSR. (The IA32_VMX_TRUE_EXIT_CTLS MSR is not supported.)
- If bit 55 in the IA32_VMX_BASIC MSR is read as 1, all information about the allowed settings of the primary VM-exit controls is contained in the IA32_VMX_TRUE_EXIT_CTLS MSR. Assuming that software knows that the default1 class of primary VM-exit controls contains bits 0–8, 10, 11, 13, 14, 16, and 17, there is no need for software to consult the IA32_VMX_EXIT_CTLS MSR.

A.4.2 Secondary VM-Exit Controls

The IA32_VMX_EXIT_CTLS2 MSR (index 493H) reports on the allowed 1-settings of the secondary VM-exit controls (see Section 25.7.1); the 1-setting is not allowed for any reserved bit.

VM entry allows control X (bit X of the secondary VM-exit controls) to be 1 if bit X in the MSR is set to 1; if bit X in the MSR is cleared to 0, VM entry fails if control X and the "activate secondary controls" primary VM-exit control are both 1.

The IA32_VMX_EXIT_CTLS2 MSR exists only on processors that support the 1-setting of the "activate secondary controls" VM-exit control (only if bit 63 of the IA32_VMX_EXIT_CTLS MSR is 1).

Notice that the organization of this MSR differs from that of IA32_VMX_EXIT_CTLS (Appendix A.4.1). This is because there are 64 secondary VM-exit controls, while there were only 32 primary VM-exit controls.

A.5 VM-ENTRY CONTROLS

The IA32_VMX_ENTRY_CTLS MSR (index 484H) reports on the allowed settings of **most** of the VM-entry controls (see Section 25.8.1):

- Bits 31:0 indicate the allowed 0-settings of these controls. VM entry allows control X (bit X of the VM-entry controls) to be 0 if bit X in the MSR is cleared to 0; if bit X in the MSR is set to 1, VM entry fails if control X is 0.

  Exceptions are made for the VM-entry controls in the default1 class (see Appendix A.2). These are bits 0–8 and 12; the corresponding bits of the IA32_VMX_ENTRY_CTLS MSR are always read as 1. The treatment of these controls by VM entry is determined by bit 55 in the IA32_VMX_BASIC MSR:

  — If bit 55 in the IA32_VMX_BASIC MSR is read as 0, VM entry fails if any VM-entry control in the default1 class is 0.

  — If bit 55 in the IA32_VMX_BASIC MSR is read as 1, the IA32_VMX_TRUE_ENTRY_CTLS MSR (see below) reports which of the VM-entry controls in the default1 class can be 0 on VM entry.

- Bits 63:32 indicate the allowed 1-settings of these controls. VM entry fails if bit X is 1 in the VM-entry controls and bit 32+X is 0 in this MSR.

If bit 55 in the IA32_VMX_BASIC MSR is read as 1, the IA32_VMX_TRUE_ENTRY_CTLS MSR (index 490H) reports on the allowed settings of **all** of the VM-entry controls:

- Bits 31:0 indicate the allowed 0-settings of these controls. VM entry allows control X to be 0 if bit X in the MSR is cleared to 0; if bit X in the MSR is set to 1, VM entry fails if control X is 0. There are no exceptions.
- Bits 63:32 indicate the allowed 1-settings of these controls. VM entry allows control 32+X to be 1 if bit X in the MSR is set to 1; if bit 32+X in the MSR is cleared to 0, VM entry fails if control X is 1.

It is necessary for software to consult only one of the capability MSRs to determine the allowed settings of the VM-entry controls:

- If bit 55 in the IA32_VMX_BASIC MSR is read as 0, all information about the allowed settings of the VM-entry controls is contained in the IA32_VMX_ENTRY_CTLS MSR. (The IA32_VMX_TRUE_ENTRY_CTLS MSR is not supported.)
- If bit 55 in the IA32_VMX_BASIC MSR is read as 1, all information about the allowed settings of the VM-entry controls is contained in the IA32_VMX_TRUE_ENTRY_CTLS MSR. Assuming that software knows that the default1 class of VM-entry controls contains bits 0–8 and 12, there is no need for software to consult the IA32_VMX_ENTRY_CTLS MSR.

A.6 MISCELLANEOUS DATA

The IA32_VMX_MISC MSR (index 485H) consists of the following fields:

- Bits 4:0 report a value X that specifies the relationship between the rate of the VMX-preemption timer and that of the timestamp counter (TSC). Specifically, the VMX-preemption timer (if it is active) counts down by 1 every time bit X in the TSC changes due to a TSC increment.
- If bit 5 is read as 1, VM exits store the value of IA32_EFER.LMA into the "IA-32e mode guest" VM-entry control; see Section 28.2 for more details. This bit is read as 1 on any logical processor that supports the 1-setting of the "unrestricted guest" VM-execution control.
- Bits 8:6 report, as a bitmap, the activity states supported by the implementation:
  - — Bit 6 reports (if set) the support for activity state 1 (HLT).
  - — Bit 7 reports (if set) the support for activity state 2 (shutdown).
  - — Bit 8 reports (if set) the support for activity state 3 (wait-for-SIPI).

  If an activity state is not supported, the implementation causes a VM entry to fail if it attempts to establish that activity state. All implementations support VM entry to activity state 0 (active).
- If bit 14 is read as 1, Intel® Processor Trace (Intel PT) can be used in VMX operation. If the processor supports Intel PT but does not allow it to be used in VMX operation, execution of VMXON clears IA32_RTIT_CTL.TraceEn (see "VMXON—Enter VMX Operation" in Chapter 31); any attempt to write IA32_RTIT_CTL while in VMX operation (including VMX root operation) causes a general-protection exception.
- If bit 15 is read as 1, the RDMSR instruction can be used in system-management mode (SMM) to read the IA32_SMBASE MSR (MSR address 9EH). See Section 32.15.6.3.
- Bits 24:16 indicate the number of CR3-target values supported by the processor. This number is a value between 0 and 256, inclusive (bit 24 is set if and only if bits 23:16 are clear).
- Bits 27:25 is used to compute the recommended maximum number of MSRs that should appear in the VM-exit MSR-store list, the VM-exit MSR-load list, or the VM-entry MSR-load list. Specifically, if the value bits 27:25 of IA32_VMX_MISC is N, then 512 * (N + 1) is the recommended maximum number of MSRs to be included in each list. If the limit is exceeded, undefined processor behavior may result (including a machine check during the VMX transition).
- If bit 28 is read as 1, bit 2 of the IA32_SMM_MONITOR_CTL can be set to 1. VMXOFF unblocks SMIs unless IA32_SMM_MONITOR_CTL[bit 2] is 1 (see Section 32.14.4).
- If bit 29 is read as 1, software can use VMWRITE to write to any supported field in the VMCS; otherwise, VMWRITE cannot be used to modify VM-exit information fields.

- If bit 30 is read as 1, VM entry allows injection of a software interrupt, software exception, or privileged software exception with an instruction length of 0.
- Bits 63:32 report the 32-bit MSEG revision identifier used by the processor.
- Bits 13:9 and bit 31 are reserved and are read as 0.

A.7 VMX-FIXED BITS IN CR0

The IA32_VMX_CR0_FIXED0 MSR (index 486H) and IA32_VMX_CR0_FIXED1 MSR (index 487H) indicate how bits in CR0 may be set in VMX operation. They report on bits in CR0 that are allowed to be 0 and to be 1, respectively, in VMX operation. If bit X is 1 in IA32_VMX_CR0_FIXED0, then that bit of CR0 is fixed to 1 in VMX operation. Similarly, if bit X is 0 in IA32_VMX_CR0_FIXED1, then that bit of CR0 is fixed to 0 in VMX operation. It is always the case that, if bit X is 1 in IA32_VMX_CR0_FIXED0, then that bit is also 1 in IA32_VMX_CR0_FIXED1; if bit X is 0 in IA32_VMX_CR0_FIXED1, then that bit is also 0 in IA32_VMX_CR0_FIXED0. Thus, each bit in CR0 is either fixed to 0 (with value 0 in both MSRs), fixed to 1 (1 in both MSRs), or flexible (0 in IA32_VMX_CR0_FIXED0 and 1 in IA32_VMX_CR0_FIXED1).

A.8 VMX-FIXED BITS IN CR4

The IA32_VMX_CR4_FIXED0 MSR (index 488H) and IA32_VMX_CR4_FIXED1 MSR (index 489H) indicate how bits in CR4 may be set in VMX operation. They report on bits in CR4 that are allowed to be 0 and 1, respectively, in VMX operation. If bit X is 1 in IA32_VMX_CR4_FIXED0, then that bit of CR4 is fixed to 1 in VMX operation. Similarly, if bit X is 0 in IA32_VMX_CR4_FIXED1, then that bit of CR4 is fixed to 0 in VMX operation. It is always the case that, if bit X is 1 in IA32_VMX_CR4_FIXED0, then that bit is also 1 in IA32_VMX_CR4_FIXED1; if bit X is 0 in IA32_VMX_CR4_FIXED1, then that bit is also 0 in IA32_VMX_CR4_FIXED0. Thus, each bit in CR4 is either fixed to 0 (with value 0 in both MSRs), fixed to 1 (1 in both MSRs), or flexible (0 in IA32_VMX_CR4_FIXED0 and 1 in IA32_VMX_CR4_FIXED1).

A.9 VMCS ENUMERATION

The IA32_VMX_VMCS_ENUM MSR (index 48AH) provides information to assist software in enumerating fields in the VMCS.

As noted in Section 25.11.2, each field in the VMCS is associated with a 32-bit encoding which is structured as follows:

- Bits 31:15 are reserved (must be 0).
- Bits 14:13 indicate the field's width.
- Bit 12 is reserved (must be 0).
- Bits 11:10 indicate the field's type.
- Bits 9:1 is an index field that distinguishes different fields with the same width and type.
- Bit 0 indicates access type.

IA32_VMX_VMCS_ENUM indicates to software the highest index value used in the encoding of any field supported by the processor:

- Bits 9:1 contain the highest index value used for any VMCS encoding.
- Bit 0 and bits 63:10 are reserved and are read as 0.

A.10 VPID AND EPT CAPABILITIES

The IA32_VMX_EPT_VPID_CAP MSR (index 48CH) reports information about the capabilities of the logical processor with regard to virtual-processor identifiers (VPIDs, Section 29.1) and extended page tables (EPT, Section 29.3):

- If bit 0 is read as 1, the processor supports execute-only translations by EPT. This support allows software to configure EPT paging-structure entries in which bits 1:0 are clear (indicating that data accesses are not allowed) and bit 2 is set (indicating that instruction fetches are allowed).[1]
- Bit 6 indicates support for a page-walk length of 4.
- If bit 8 is read as 1, the logical processor allows software to configure the EPT paging-structure memory type to be uncacheable (UC); see Section 25.6.11.
- If bit 14 is read as 1, the logical processor allows software to configure the EPT paging-structure memory type to be write-back (WB).
- If bit 16 is read as 1, the logical processor allows software to configure a EPT PDE to map a 2-Mbyte page (by setting bit 7 in the EPT PDE).
- If bit 17 is read as 1, the logical processor allows software to configure a EPT PDPTE to map a 1-Gbyte page (by setting bit 7 in the EPT PDPTE).
- Support for the INVEPT instruction (see Chapter 31 and Section 29.4.3.1):
  - — If bit 20 is read as 1, the INVEPT instruction is supported.
  - — If bit 25 is read as 1, the single-context INVEPT type is supported.
  - — If bit 26 is read as 1, the all-context INVEPT type is supported.
- If bit 21 is read as 1, accessed and dirty flags for EPT are supported (see Section 29.3.5).
- If bit 22 is read as 1, the processor reports advanced VM-exit information for EPT violations (see Section 28.2.1). This reporting is done only if this bit is read as 1.
- If bit 23 is read as 1, supervisor shadow-stack control is supported (see Section 29.3.3.2).
- Support for the INVVPID instruction (see Chapter 31 and Section 29.4.3.1):
  - — If bit 32 is read as 1, the INVVPID instruction is supported.
  - — If bit 40 is read as 1, the individual-address INVVPID type is supported.
  - — If bit 41 is read as 1, the single-context INVVPID type is supported.
  - — If bit 42 is read as 1, the all-context INVVPID type is supported.
  - — If bit 43 is read as 1, the single-context-retaining-globals INVVPID type is supported.
- Bits 53:48 enumerate the maximum HLAT prefix size. It is expected that any processor that supports the 1-setting of the "enable HLAT" VM-execution control will enumerate this value as 1. See Section 4.5.1.
- Bits 5:1, bit 7, bits 13:9, bit 15, bits 19:18, bit 24, bits 31:27, bits 39:33, bits 47:44, and bits 63:54 are reserved and are read as 0.

The IA32_VMX_EPT_VPID_CAP MSR exists only on processors that support the 1-setting of the "activate secondary controls" VM-execution control (only if bit 63 of the IA32_VMX_PROCBASED_CTLS MSR is 1) and that support either the 1-setting of the "enable EPT" VM-execution control (only if bit 33 of the IA32_VMX_PROCBASED_CTLS2 MSR is 1) or the 1-setting of the "enable VPID" VM-execution control (only if bit 37 of the IA32_VMX_PROCBASED_CTLS2 MSR is 1).

1. If the "mode-based execute control for EPT" VM-execution control is 1, setting bit 0 indicates also that software may also configure EPT paging-structure entries in which bits 1:0 are both clear and in which bit 10 is set (indicating a translation that can be used to fetch instructions from a supervisor-mode linear address or a user-mode linear address).

A.11 VM FUNCTIONS

The IA32_VMX_VMFUNC MSR (index 491H) reports on the allowed settings of the VM-function controls (see Section 25.6.14). VM entry allows bit X of the VM-function controls to be 1 if bit X in the MSR is set to 1; if bit X in the MSR is cleared to 0, VM entry fails if bit X of the VM-function controls, the "activate secondary controls" primary processor-based VM-execution control, and the "enable VM functions" secondary processor-based VM-execution control are all 1.

The IA32_VMX_VMFUNC MSR exists only on processors that support the 1-setting of the "activate secondary controls" VM-execution control (only if bit 63 of the IA32_VMX_PROCBASED_CTLS MSR is 1) and the 1-setting of the "enable VM functions" secondary processor-based VM-execution control (only if bit 45 of the IA32_VMX_PROCBASED_CTLS2 MSR is 1).

APPENDIX B
FIELD ENCODING IN VMCS

Every component of the VMCS is encoded by a 32-bit field that can be used by VMREAD and VMWRITE. Section 25.11.2 describes the structure of the encoding space (the meanings of the bits in each 32-bit encoding).

This appendix enumerates all fields in the VMCS and their encodings. Fields are grouped by width (16-bit, 32-bit, etc.) and type (guest-state, host-state, etc.)

B.1 16-BIT FIELDS

A value of 0 in bits 14:13 of an encoding indicates a 16-bit field. Only guest-state areas and the host-state area contain 16-bit fields. As noted in Section 25.11.2, each 16-bit field allows only full access, meaning that bit 0 of its encoding is 0. Each such encoding is thus an even number.

B.1.1 16-Bit Control Fields

A value of 0 in bits 11:10 of an encoding indicates a control field. These fields are distinguished by their index value in bits 9:1. Table B-1 enumerates the 16-bit control fields.

Table B-1. Encoding for 16-Bit Control Fields (0000_00xx_xxxx_xxx0B)

Field Name	Index	Encoding
Virtual-processor identifier (VPID)[1]	000000000B	00000000H
Posted-interrupt notification vector[2]	000000001B	00000002H
EPTP index[3]	000000010B	00000004H
HLAT prefix size[4]	000000011B	00000006H
Last PID-pointer index[5]	000000100B	00000008H

NOTES:

1. This field exists only on processors that support the 1-setting of the "enable VPID" VM-execution control.
2. This field exists only on processors that support the 1-setting of the "process posted interrupts" VM-execution control.
3. This field exists only on processors that support the 1-setting of the "EPT-violation #VE" VM-execution control.
4. This field exists only on processors that support the 1-setting of the "enable HLAT" VM-execution control.
5. This field exists only on processors that support the 1-setting of the "IPI virtualization" VM-execution control.

B.1.2 16-Bit Guest-State Fields

A value of 2 in bits 11:10 of an encoding indicates a field in the guest-state area. These fields are distinguished by their index value in bits 9:1. Table B-2 enumerates 16-bit guest-state fields.

Table B-2. Encodings for 16-Bit Guest-State Fields (0000_10xx_xxxx_xxx0B)

Field Name	Index	Encoding
Guest ES selector	000000000B	00000800H
Guest CS selector	000000001B	00000802H
Guest SS selector	000000010B	00000804H
Guest DS selector	000000011B	00000806H
Guest FS selector	000000100B	00000808H

Table B-2. Encodings for 16-Bit Guest-State Fields (0000_10xx_xxxx_xxx0B) (Contd.)

Field Name	Index	Encoding
Guest GS selector	000000101B	0000080AH
Guest LDTR selector	000000110B	0000080CH
Guest TR selector	000000111B	0000080EH
Guest interrupt status[1]	000001000B	00000810H
PML index[2]	000001001B	00000812H
Guest UINV[3]	000001010B	00000814H

NOTES:

1. This field exists only on processors that support the 1-setting of the "virtual-interrupt delivery" VM-execution control.
2. This field exists only on processors that support the 1-setting of the "enable PML" VM-execution control.
3. This field exists only on processors that support the 1-setting of either the "clear UINV" VM-exit control or the "load UINV" VM-entry control.

B.1.3 16-Bit Host-State Fields

A value of 3 in bits 11:10 of an encoding indicates a field in the host-state area. These fields are distinguished by their index value in bits 9:1. Table B-3 enumerates the 16-bit host-state fields.

Table B-3. Encodings for 16-Bit Host-State Fields (0000_11xx_xxxx_xxx0B)

Field Name	Index	Encoding
Host ES selector	000000000B	00000C00H
Host CS selector	000000001B	00000C02H
Host SS selector	000000010B	00000C04H
Host DS selector	000000011B	00000C06H
Host FS selector	000000100B	00000C08H
Host GS selector	000000101B	00000C0AH
Host TR selector	000000110B	00000C0CH

B.2 64-BIT FIELDS

A value of 1 in bits 14:13 of an encoding indicates a 64-bit field. There are 64-bit fields only for controls and for guest state. As noted in Section 25.11.2, every 64-bit field has two encodings, which differ on bit 0, the access type. Thus, each such field has an even encoding for full access and an odd encoding for high access.

B.2.1 64-Bit Control Fields

A value of 0 in bits 11:10 of an encoding indicates a control field. These fields are distinguished by their index value in bits 9:1. Table B-4 enumerates the 64-bit control fields.

Table B-4. Encodings for 64-Bit Control Fields (0010_00xx_xxxx_xxxAb)

Field Name	Index	Encoding
Address of I/O bitmap A (full)	000000000B	00002000H
Address of I/O bitmap A (high)		00002001H
Address of I/O bitmap B (full)	000000001B	00002002H
Address of I/O bitmap B (high)		00002003H

Table B-4. Encodings for 64-Bit Control Fields (0010_00xx_xxxx_xxxAb) (Contd.)

Field Name	Index	Encoding
Address of MSR bitmaps (full)[1]	000000010B	00002004H
Address of MSR bitmaps (high)[1]		00002005H
VM-exit MSR-store address (full)	000000011B	00002006H
VM-exit MSR-store address (high)		00002007H
VM-exit MSR-load address (full)	000000100B	00002008H
VM-exit MSR-load address (high)		00002009H
VM-entry MSR-load address (full)	000000101B	0000200AH
VM-entry MSR-load address (high)		0000200BH
Executive-VMCS pointer (full)	000000110B	0000200CH
Executive-VMCS pointer (high)		0000200DH
PML address (full)[2]	000000111B	0000200EH
PML address (high)[2]		0000200FH
TSC offset (full)	000001000B	00002010H
TSC offset (high)		00002011H
Virtual-APIC address (full)[3]	000001001B	00002012H
Virtual-APIC address (high)[3]		00002013H
APIC-access address (full)[4]	000001010B	00002014H
APIC-access address (high)[4]		00002015H
Posted-interrupt descriptor address (full)[5]	000001011B	00002016H
Posted-interrupt descriptor address (high)[5]		00002017H
VM-function controls (full)[6]	000001100B	00002018H
VM-function controls (high)[6]		00002019H
EPT pointer (EPTP; full)[7]	000001101B	0000201AH
EPT pointer (EPTP; high)[7]		0000201BH
EOI-exit bitmap 0 (EOI_EXIT0; full)[8]	000001110B	0000201CH
EOI-exit bitmap 0 (EOI_EXIT0; high)[8]		0000201DH
EOI-exit bitmap 1 (EOI_EXIT1; full)[8]	000001111B	0000201EH
EOI-exit bitmap 1 (EOI_EXIT1; high)[8]		0000201FH
EOI-exit bitmap 2 (EOI_EXIT2; full)[8]	000010000B	00002020H
EOI-exit bitmap 2 (EOI_EXIT2; high)[8]		00002021H
EOI-exit bitmap 3 (EOI_EXIT3; full)[8]	000010001B	00002022H
EOI-exit bitmap 3 (EOI_EXIT3; high)[8]		00002023H
EPTP-list address (full)[9]	000010010B	00002024H
EPTP-list address (high)[9]		00002025H
VMREAD-bitmap address (full)[10]	000010011B	00002026H
VMREAD-bitmap address (high)[10]		00002027H
VMWRITE-bitmap address (full)[10]	000010100B	00002028H
VMWRITE-bitmap address (high)[10]		00002029H

Table B-4. Encodings for 64-Bit Control Fields (0010_00xx_xxxx_xxxAb) (Contd.)

Field Name	Index	Encoding
Virtualization-exception information address (full)[11]	000010101B	0000202AH
Virtualization-exception information address (high)[11]		0000202BH
XSS-exiting bitmap (full)[12]	000010110B	0000202CH
XSS-exiting bitmap (high)[12]		0000202DH
ENCLS-exiting bitmap (full)[13]	000010111B	0000202EH
ENCLS-exiting bitmap (high)[13]		0000202FH
Sub-page-permission-table pointer (full)[14]	000011000B	00002030H
Sub-page-permission-table pointer (high)[14]		00002031H
TSC multiplier (full)[15]	000011001B	00002032H
TSC multiplier (high)[15]		00002033H
Tertiary processor-based VM-execution controls (full)[16]	000011010B	00002034H
Tertiary processor-based VM-execution controls (high)[16]		00002035H
ENCLV-exiting bitmap (full)[17]	000011011B	00002036H
ENCLV-exiting bitmap (high)[17]		00002037H
Low PASID directory address (full)[18]	000011100B	00002038H
Low PASID directory address (high)[18]		00002039H
High PASID directory address (full)[18]	000011101B	0000203AH
High PASID directory address (high)[18]		0000203BH
Shared EPT pointer (full)[19]	000011110B	0000203CH
Shared EPT pointer (high)[19]		0000203DH
PCONFIG-exiting bitmap (full)[20]	000011111B	0000203EH
PCONFIG-exiting bitmap (high)[20]		0000203FH
Hypervisor-managed linear-address translation pointer (HLATP; full)[21]	000100000B	00002040H
HLATP (high)[21]		00002041H
PID-pointer table address (full)[22]	000100001B	00002042H
PID-pointer table address (high)[22]		00002043H
Secondary VM-exit controls (full)[23]	000100010B	00002044H
Secondary VM-exit controls (high)[23]		00002045H

NOTES:

1. This field exists only on processors that support the 1-setting of the "use MSR bitmaps" VM-execution control.
2. This field exists only on processors that support the 1-setting of the "enable PML" VM-execution control.
3. This field exists only on processors that support the 1-setting of the "use TPR shadow" VM-execution control.
4. This field exists only on processors that support the 1-setting of the "virtualize APIC accesses" VM-execution control.
5. This field exists only on processors that support the 1-setting of the "process posted interrupts" VM-execution control.
6. This field exists only on processors that support the 1-setting of the "enable VM functions" VM-execution control.
7. This field exists only on processors that support the 1-setting of the "enable EPT" VM-execution control.
8. This field exists only on processors that support the 1-setting of the "virtual-interrupt delivery" VM-execution control.
9. This field exists only on processors that support the 1-setting of the "EPTP switching" VM-function control.
10. This field exists only on processors that support the 1-setting of the "VMCS shadowing" VM-execution control.
11. This field exists only on processors that support the 1-setting of the "EPT-violation #VE" VM-execution control.
12. This field exists only on processors that support the 1-setting of the "enable XSAVES/XRSTORS" VM-execution control.

13. This field exists only on processors that support the 1-setting of the "enable ENCLS exiting" VM-execution control.
14. This field exists only on processors that support the 1-setting of the "sub-page write permissions for EPT" VM-execution control.
15. This field exists only on processors that support the 1-setting of the "use TSC scaling" VM-execution control.
16. This field exists only on processors that support the 1-setting of the "activate tertiary controls" VM-execution control.
17. This field exists only on processors that support the 1-setting of the "enable ENCLV exiting" VM-execution control.
18. This field exists only on processors that support the 1-setting of the "PASID translation" VM-execution control.
19. This field exists only on processors that support the 1-setting of the "shared-EPTP" VM-execution control.
20. This field exists only on processors that support the 1-setting of the "enable PCONFIG" VM-execution control.
21. This field exists only on processors that support the 1-setting of the "enable HLAT" VM-execution control.
22. This field exists only on processors that support the 1-setting of the "IPI virtualization" VM-execution control.
23. This field exists only on processors that support the 1-setting of the "activate secondary controls" VM-exit control.

B.2.2 64-Bit Read-Only Data Field

A value of 1 in bits 11:10 of an encoding indicates a read-only data field. These fields are distinguished by their index value in bits 9:1. There is only one such 64-bit field as given in Table B-5.(As with other 64-bit fields, this one has two encodings.)

Table B-5. Encodings for 64-Bit Read-Only Data Field (0010_01xx_xxxx_xxxAb)

Field Name	Index	Encoding
Guest-physical address (full)[1]	000000000B	00002400H
Guest-physical address (high)[1]		00002401H

NOTES:
1. This field exists only on processors that support the 1-setting of the "enable EPT" VM-execution control.

B.2.3 64-Bit Guest-State Fields

A value of 2 in bits 11:10 of an encoding indicates a field in the guest-state area. These fields are distinguished by their index value in bits 9:1. Table B-6 enumerates the 64-bit guest-state fields.

Table B-6. Encodings for 64-Bit Guest-State Fields (0010_10xx_xxxx_xxxAb)

Field Name	Index	Encoding
VMCS link pointer (full)	000000000B	00002800H
VMCS link pointer (high)		00002801H
Guest IA32_DEBUGCTL (full)	000000001B	00002802H
Guest IA32_DEBUGCTL (high)		00002803H
Guest IA32_PAT (full)[1]	000000010B	00002804H
Guest IA32_PAT (high)[1]		00002805H
Guest IA32_EFER (full)[2]	000000011B	00002806H
Guest IA32_EFER (high)[2]		00002807H
Guest IA32_PERF_GLOBAL_CTRL (full)[3]	000000100B	00002808H
Guest IA32_PERF_GLOBAL_CTRL (high)[3]		00002809H
Guest PDPTE0 (full)[4]	000000101B	0000280AH
Guest PDPTE0 (high)[4]		0000280BH

Table B-6. Encodings for 64-Bit Guest-State Fields (0010_10xx_xxxx_xxxAb) (Contd.)

Field Name	Index	Encoding
Guest PDPTE1 (full)[4]	000000110B	0000280CH
Guest PDPTE1 (high)[4]		0000280DH
Guest PDPTE2 (full)[4]	000000111B	0000280EH
Guest PDPTE2 (high)[4]		0000280FH
Guest PDPTE3 (full)[4]	000001000B	00002810H
Guest PDPTE3 (high)[4]		00002811H
Guest IA32_BNDCFGS (full)[5]	000001001B	00002812H
Guest IA32_BNDCFGS (high)[5]		00002813H
Guest IA32_RTIT_CTL (full)[6]	000001010B	00002814H
Guest IA32_RTIT_CTL (high)[6]		00002815H
Guest IA32_LBR_CTL (full)[7]	000001011B	00002816H
Guest IA32_LBR_CTL (high)[7]		00002817H
Guest IA32_PKRS (full)[8]	000001100B	00002818H
Guest IA32_PKRS (high)[8]		00002819H

NOTES:

1. This field exists only on processors that support either the 1-setting of the "load IA32_PAT" VM-entry control or that of the "save IA32_PAT" VM-exit control.
2. This field exists only on processors that support either the 1-setting of the "load IA32_EFER" VM-entry control or that of the "save IA32_EFER" VM-exit control.
3. This field exists only on processors that support the 1-setting of the "load IA32_PERF_GLOBAL_CTRL" VM-entry control.
4. This field exists only on processors that support the 1-setting of the "enable EPT" VM-execution control.
5. This field exists only on processors that support either the 1-setting of the "load IA32_BNDCFGS" VM-entry control or that of the "clear IA32_BNDCFGS" VM-exit control.
6. This field exists only on processors that support either the 1-setting of the "load IA32_RTIT_CTL" VM-entry control or that of the "clear IA32_RTIT_CTL" VM-exit control.
7. This field exists only on processors that support either the 1-setting of the "load IA32_LBR_CTL" VM-entry control or that of the "clear IA32_LBR_CTL" VM-exit control.
8. This field exists only on processors that support the 1-setting of the "load PKRS" VM-entry control.

B.2.4 64-Bit Host-State Fields

A value of 3 in bits 11:10 of an encoding indicates a field in the host-state area. These fields are distinguished by their index value in bits 9:1. Table B-7 enumerates the 64-bit control fields.

Table B-7. Encodings for 64-Bit Host-State Fields (0010_11xx_xxxx_xxxAb)

Field Name	Index	Encoding
Host IA32_PAT (full)[1]	000000000B	00002C00H
Host IA32_PAT (high)[1]		00002C01H
Host IA32_EFER (full)[2]	000000001B	00002C02H
Host IA32_EFER (high)[2]		00002C03H
Host IA32_PERF_GLOBAL_CTRL (full)[3]	000000010B	00002C04H
Host IA32_PERF_GLOBAL_CTRL (high)[3]		00002C05H

Table B-7. Encodings for 64-Bit Host-State Fields (0010_11xx_xxxx_xxxAb) (Contd.)

Field Name	Index	Encoding
Host IA32_PKRS (full)[4]	000000011B	00002C06H
Host IA32_PKRS (high)[4]		00002C07H

NOTES:

1. This field exists only on processors that support the 1-setting of the "load IA32_PAT" VM-exit control.
2. This field exists only on processors that support the 1-setting of the "load IA32_EFER" VM-exit control.
3. This field exists only on processors that support the 1-setting of the "load IA32_PERF_GLOBAL_CTRL" VM-exit control.
4. This field exists only on processors that support the 1-setting of the "load PKRS" VM-exit control.

B.3 32-BIT FIELDS

A value of 2 in bits 14:13 of an encoding indicates a 32-bit field. As noted in Section 25.11.2, each 32-bit field allows only full access, meaning that bit 0 of its encoding is 0. Each such encoding is thus an even number.

B.3.1 32-Bit Control Fields

A value of 0 in bits 11:10 of an encoding indicates a control field. These fields are distinguished by their index value in bits 9:1. Table B-8 enumerates the 32-bit control fields.

Table B-8. Encodings for 32-Bit Control Fields (0100_00xx_xxxx_xxx0B)

Field Name	Index	Encoding
Pin-based VM-execution controls	000000000B	00004000H
Primary processor-based VM-execution controls	000000001B	00004002H
Exception bitmap	000000010B	00004004H
Page-fault error-code mask	000000011B	00004006H
Page-fault error-code match	000000100B	00004008H
CR3-target count	000000101B	0000400AH
Primary VM-exit controls	000000110B	0000400CH
VM-exit MSR-store count	000000111B	0000400EH
VM-exit MSR-load count	000001000B	00004010H
VM-entry controls	000001001B	00004012H
VM-entry MSR-load count	000001010B	00004014H
VM-entry interruption-information field	000001011B	00004016H
VM-entry exception error code	000001100B	00004018H
VM-entry instruction length	000001101B	0000401AH
TPR threshold[1]	000001110B	0000401CH
Secondary processor-based VM-execution controls[2]	000001111b	0000401EH
PLE_Gap[3]	000010000b	00004020H
PLE_Window[3]	000010001b	00004022H

NOTES:

1. This field exists only on processors that support the 1-setting of the "use TPR shadow" VM-execution control.
2. This field exists only on processors that support the 1-setting of the "activate secondary controls" VM-execution control.

3. This field exists only on processors that support the 1-setting of the "PAUSE-loop exiting" VM-execution control.

B.3.2 32-Bit Read-Only Data Fields

A value of 1 in bits 11:10 of an encoding indicates a read-only data field. These fields are distinguished by their index value in bits 9:1. Table B-9 enumerates the 32-bit read-only data fields.

Table B-9. Encodings for 32-Bit Read-Only Data Fields (0100_01xx_xxxx_xxx0B)

Field Name	Index	Encoding
VM-instruction error	000000000B	00004400H
Exit reason	000000001B	00004402H
VM-exit interruption information	000000010B	00004404H
VM-exit interruption error code	000000011B	00004406H
IDT-vectoring information field	000000100B	00004408H
IDT-vectoring error code	000000101B	0000440AH
VM-exit instruction length	000000110B	0000440CH
VM-exit instruction information	000000111B	0000440EH

B.3.3 32-Bit Guest-State Fields

A value of 2 in bits 11:10 of an encoding indicates a field in the guest-state area. These fields are distinguished by their index value in bits 9:1. Table B-10 enumerates the 32-bit guest-state fields.

Table B-10. Encodings for 32-Bit Guest-State Fields (0100_10xx_xxxx_xxx0B)

Field Name	Index	Encoding
Guest ES limit	000000000B	00004800H
Guest CS limit	000000001B	00004802H
Guest SS limit	000000010B	00004804H
Guest DS limit	000000011B	00004806H
Guest FS limit	000000100B	00004808H
Guest GS limit	000000101B	0000480AH
Guest LDTR limit	000000110B	0000480CH
Guest TR limit	000000111B	0000480EH
Guest GDTR limit	000001000B	00004810H
Guest IDTR limit	000001001B	00004812H
Guest ES access rights	000001010B	00004814H
Guest CS access rights	000001011B	00004816H
Guest SS access rights	000001100B	00004818H
Guest DS access rights	000001101B	0000481AH
Guest FS access rights	000001110B	0000481CH
Guest GS access rights	000001111B	0000481EH
Guest LDTR access rights	000010000B	00004820H
Guest TR access rights	000010001B	00004822H

Table B-10. Encodings for 32-Bit Guest-State Fields (0100_10xx_xxxx_xxx0B) (Contd.)

Field Name	Index	Encoding
Guest interruptibility state	000010010B	00004824H
Guest activity state	000010011B	00004826H
Guest SMBASE	000010100B	00004828H
Guest IA32_SYSENTER_CS	000010101B	0000482AH
VMX-preemption timer value[1]	000010111B	0000482EH

NOTES:

1. This field exists only on processors that support the 1-setting of the "activate VMX-preemption timer" VM-execution control.

The limit fields for GDTR and IDTR are defined to be 32 bits in width even though these fields are only 16-bits wide in the Intel 64 and IA-32 architectures. VM entry ensures that the high 16 bits of both these fields are cleared to 0.

B.3.4 32-Bit Host-State Field

A value of 3 in bits 11:10 of an encoding indicates a field in the host-state area. There is only one such 32-bit field as given in Table B-11.

Table B-11. Encoding for 32-Bit Host-State Field (0100_11xx_xxxx_xxx0B)

Field Name	Index	Encoding
Host IA32_SYSENTER_CS	000000000B	00004C00H

B.4 NATURAL-WIDTH FIELDS

A value of 3 in bits 14:13 of an encoding indicates a natural-width field. As noted in Section 25.11.2, each of these fields allows only full access, meaning that bit 0 of its encoding is 0. Each such encoding is thus an even number.

B.4.1 Natural-Width Control Fields

A value of 0 in bits 11:10 of an encoding indicates a control field. These fields are distinguished by their index value in bits 9:1. Table B-12 enumerates the natural-width control fields.

Table B-12. Encodings for Natural-Width Control Fields (0110_00xx_xxxx_xxx0B)

Field Name	Index	Encoding
CR0 guest/host mask	000000000B	00006000H
CR4 guest/host mask	000000001B	00006002H
CR0 read shadow	000000010B	00006004H
CR4 read shadow	000000011B	00006006H
CR3-target value 0	000000100B	00006008H
CR3-target value 1	000000101B	0000600AH
CR3-target value 2	000000110B	0000600CH
CR3-target value 3[1]	000000111B	0000600EH

NOTES:

1. If a future implementation supports more than 4 CR3-target values, they will be encoded consecutively following the 4 encodings given here.

B.4.2 Natural-Width Read-Only Data Fields

A value of 1 in bits 11:10 of an encoding indicates a read-only data field. These fields are distinguished by their index value in bits 9:1. Table B-13 enumerates the natural-width read-only data fields.

Table B-13. Encodings for Natural-Width Read-Only Data Fields (0110_01xx_xxxx_xxx0B)

Field Name	Index	Encoding
Exit qualification	000000000B	00006400H
I/O RCX	000000001B	00006402H
I/O RSI	000000010B	00006404H
I/O RDI	000000011B	00006406H
I/O RIP	000000100B	00006408H
Guest-linear address	000000101B	0000640AH

B.4.3 Natural-Width Guest-State Fields

A value of 2 in bits 11:10 of an encoding indicates a field in the guest-state area. These fields are distinguished by their index value in bits 9:1. Table B-14 enumerates the natural-width guest-state fields.

Table B-14. Encodings for Natural-Width Guest-State Fields (0110_10xx_xxxx_xxx0B)

Field Name	Index	Encoding
Guest CR0	000000000B	00006800H
Guest CR3	000000001B	00006802H
Guest CR4	000000010B	00006804H
Guest ES base	000000011B	00006806H
Guest CS base	000000100B	00006808H
Guest SS base	000000101B	0000680AH
Guest DS base	000000110B	0000680CH
Guest FS base	000000111B	0000680EH
Guest GS base	000001000B	00006810H
Guest LDTR base	000001001B	00006812H
Guest TR base	000001010B	00006814H
Guest GDTR base	000001011B	00006816H
Guest IDTR base	000001100B	00006818H
Guest DR7	000001101B	0000681AH
Guest RSP	000001110B	0000681CH
Guest RIP	000001111B	0000681EH
Guest RFLAGS	000010000B	00006820H
Guest pending debug exceptions	000010001B	00006822H
Guest IA32_SYSENTER_ESP	000010010B	00006824H
Guest IA32_SYSENTER_EIP	000010011B	00006826H
Guest IA32_S_CET[1]	000010100B	00006828H
Guest SSP[1]	000010101B	0000682AH

Table B-14. Encodings for Natural-Width Guest-State Fields (0110_10xx_xxxx_xxx0B) (Contd.)

Field Name	Index	Encoding
Guest IA32_INTERRUPT_SSP_TABLE_ADDR[1]	000010110B	0000682CH

NOTES:

1. This field is supported only on processors that support the 1-setting of the "load CET state" VM-entry control.

The base-address fields for ES, CS, SS, and DS in the guest-state area are defined to be natural-width (with 64 bits on processors supporting Intel 64 architecture) even though these fields are only 32-bits wide in the Intel 64 architecture. VM entry ensures that the high 32 bits of these fields are cleared to 0.

B.4.4 Natural-Width Host-State Fields

A value of 3 in bits 11:10 of an encoding indicates a field in the host-state area. These fields are distinguished by their index value in bits 9:1. Table B-15 enumerates the natural-width host-state fields.

Table B-15. Encodings for Natural-Width Host-State Fields (0110_11xx_xxxx_xxx0B)

Field Name	Index	Encoding
Host CR0	000000000B	00006C00H
Host CR3	000000001B	00006C02H
Host CR4	000000010B	00006C04H
Host FS base	000000011B	00006C06H
Host GS base	000000100B	00006C08H
Host TR base	000000101B	00006C0AH
Host GDTR base	000000110B	00006C0CH
Host IDTR base	000000111B	00006C0EH
Host IA32_SYSENTER_ESP	000001000B	00006C10H
Host IA32_SYSENTER_EIP	000001001B	00006C12H
Host RSP	000001010B	00006C14H
Host RIP	000001011B	00006C16H
Host IA32_S_CET[1]	000001100B	00006C18H
Host SSP[1]	000001101B	00006C1AH
Host IA32_INTERRUPT_SSP_TABLE_ADDR[1]	000001110B	00006C1CH

NOTES:

1. This field is supported only on processors that support the 1-setting of the "load CET state" VM-exit control.

APPENDIX C
VMX BASIC EXIT REASONS

Every VM exit writes a 32-bit exit reason to the VMCS (see Section 25.9.1). Certain VM-entry failures also do this (see Section 27.8). The low 16 bits of the exit-reason field form the basic exit reason which provides basic information about the cause of the VM exit or VM-entry failure.

Table C-1 lists values for basic exit reasons and explains their meaning. Entries apply to VM exits, unless otherwise noted.

Table C-1. Basic Exit Reasons

Basic Exit Reason	Description
0	**Exception or non-maskable interrupt (NMI).** Either: 1: Guest software caused an exception and the bit in the exception bitmap associated with exception's vector was 1. This case includes executions of BOUND that cause #BR, executions of INT1 (they cause #DB), executions of INT3 (they cause #BP), executions of INTO that cause #OF, and executions of UD0, UD1, and UD2 (they cause #UD). 2: An NMI was delivered to the logical processor and the "NMI exiting" VM-execution control was 1.
1	**External interrupt.** An external interrupt arrived and the "external-interrupt exiting" VM-execution control was 1.
2	**Triple fault.** The logical processor encountered an exception while attempting to call the double-fault handler and that exception did not itself cause a VM exit due to the exception bitmap.
3	**INIT signal.** An INIT signal arrived
4	**Start-up IPI (SIPI).** A SIPI arrived while the logical processor was in the "wait-for-SIPI" state.
5	**I/O system-management interrupt (SMI).** An SMI arrived immediately after retirement of an I/O instruction and caused an SMM VM exit (see Section 32.15.2).
6	**Other SMI.** An SMI arrived and caused an SMM VM exit (see Section 32.15.2) but not immediately after retirement of an I/O instruction.
7	**Interrupt window.** At the beginning of an instruction, RFLAGS.IF was 1; events were not blocked by STI or by MOV SS; and the "interrupt-window exiting" VM-execution control was 1.
8	**NMI window.** At the beginning of an instruction, there was no virtual-NMI blocking; events were not blocked by MOV SS; and the "NMI-window exiting" VM-execution control was 1.
9	**Task switch.** Guest software attempted a task switch.
10	**CPUID.** Guest software attempted to execute CPUID.
11	**GETSEC.** Guest software attempted to execute GETSEC.
12	**HLT.** Guest software attempted to execute HLT and the "HLT exiting" VM-execution control was 1.
13	**INVD.** Guest software attempted to execute INVD.
14	**INVLPG.** Guest software attempted to execute INVLPG and the "INVLPG exiting" VM-execution control was 1.
15	**RDPMC.** Guest software attempted to execute RDPMC and the "RDPMC exiting" VM-execution control was 1.
16	**RDTSC.** Guest software attempted to execute RDTSC and the "RDTSC exiting" VM-execution control was 1.
17	**RSM.** Guest software attempted to execute RSM in SMM.
18	**VMCALL.** VMCALL was executed either by guest software (causing an ordinary VM exit) or by the executive monitor (causing an SMM VM exit; see Section 32.15.2).
19	**VMCLEAR.** Guest software attempted to execute VMCLEAR.
20	**VMLAUNCH.** Guest software attempted to execute VMLAUNCH.
21	**VMPTRLD.** Guest software attempted to execute VMPTRLD.
22	**VMPTRST.** Guest software attempted to execute VMPTRST.

Table C-1. Basic Exit Reasons (Contd.)

Basic Exit Reason	Description
23	**VMREAD.** Guest software attempted to execute VMREAD.
24	**VMRESUME.** Guest software attempted to execute VMRESUME.
25	**VMWRITE.** Guest software attempted to execute VMWRITE.
26	**VMXOFF.** Guest software attempted to execute VMXOFF.
27	**VMXON.** Guest software attempted to execute VMXON.
28	**Control-register accesses.** Guest software attempted to access CR0, CR3, CR4, or CR8 using CLTS, LMSW, or MOV CR and the VM-execution control fields indicate that a VM exit should occur (see Section 26.1 for details). This basic exit reason is not used for trap-like VM exits following executions of the MOV to CR8 instruction when the "use TPR shadow" VM-execution control is 1. Such VM exits instead use basic exit reason 43.
29	**MOV DR.** Guest software attempted a MOV to or from a debug register and the "MOV-DR exiting" VM-execution control was 1.
30	**I/O instruction.** Guest software attempted to execute an I/O instruction and either: 1: The "use I/O bitmaps" VM-execution control was 0 and the "unconditional I/O exiting" VM-execution control was 1. 2: The "use I/O bitmaps" VM-execution control was 1 and a bit in the I/O bitmap associated with one of the ports accessed by the I/O instruction was 1.
31	**RDMSR.** Guest software attempted to execute RDMSR and either: 1: The "use MSR bitmaps" VM-execution control was 0. 2: The value of RCX is neither in the range 00000000H – 00001FFFH nor in the range C0000000H – C0001FFFH. 3: The value of RCX was in the range 00000000H – 00001FFFH and the nth bit in read bitmap for low MSRs is 1, where n was the value of RCX. 4: The value of RCX is in the range C0000000H – C0001FFFH and the nth bit in read bitmap for high MSRs is 1, where n is the value of RCX & 00001FFFH.
32	**WRMSR.** Guest software attempted to execute WRMSR and either: 1: The "use MSR bitmaps" VM-execution control was 0. 2: The value of RCX is neither in the range 00000000H – 00001FFFH nor in the range C0000000H – C0001FFFH. 3: The value of RCX was in the range 00000000H – 00001FFFH and the nth bit in write bitmap for low MSRs is 1, where n was the value of RCX. 4: The value of RCX is in the range C0000000H – C0001FFFH and the nth bit in write bitmap for high MSRs is 1, where n is the value of RCX & 00001FFFH.
33	**VM-entry failure due to invalid guest state.** A VM entry failed one of the checks identified in Section 27.3.1.
34	**VM-entry failure due to MSR loading.** A VM entry failed in an attempt to load MSRs. See Section 27.4.
36	**MWAIT.** Guest software attempted to execute MWAIT and the "MWAIT exiting" VM-execution control was 1.
37	**Monitor trap flag.** A VM exit occurred due to the 1-setting of the "monitor trap flag" VM-execution control (see Section 26.5.2) or VM entry injected a pending MTF VM exit as part of VM entry (see Section 27.6.2).
39	**MONITOR.** Guest software attempted to execute MONITOR and the "MONITOR exiting" VM-execution control was 1.
40	**PAUSE.** Either guest software attempted to execute PAUSE and the "PAUSE exiting" VM-execution control was 1 or the "PAUSE-loop exiting" VM-execution control was 1 and guest software executed a PAUSE loop with execution time exceeding PLE_Window (see Section 26.1.3).
41	**VM-entry failure due to machine-check event.** A machine-check event occurred during VM entry (see Section 27.9).
43	**TPR below threshold.** The logical processor determined that the value of bits 7:4 of the byte at offset 080H on the virtual-APIC page was below that of the TPR threshold VM-execution control field while the "use TPR shadow" VM-execution control was 1 either as part of TPR virtualization (Section 30.1.2) or VM entry (Section 27.7.7).
44	**APIC access.** Guest software attempted to access memory at a physical address on the APIC-access page and the "virtualize APIC accesses" VM-execution control was 1 (see Section 30.4).
45	**Virtualized EOI.** EOI virtualization was performed for a virtual interrupt whose vector indexed a bit set in the EOI-exit bitmap.

Table C-1. Basic Exit Reasons (Contd.)

Basic Exit Reason	Description
46	**Access to GDTR or IDTR.** Guest software attempted to execute LGDT, LIDT, SGDT, or SIDT and the "descriptor-table exiting" VM-execution control was 1.
47	**Access to LDTR or TR.** Guest software attempted to execute LLDT, LTR, SLDT, or STR and the "descriptor-table exiting" VM-execution control was 1.
48	**EPT violation.** An attempt to access memory with a guest-physical address was disallowed by the configuration of the EPT paging structures.
49	**EPT misconfiguration.** An attempt to access memory with a guest-physical address encountered a misconfigured EPT paging-structure entry.
50	**INVEPT.** Guest software attempted to execute INVEPT.
51	**RDTSCP.** Guest software attempted to execute RDTSCP and the "enable RDTSCP" and "RDTSC exiting" VM-execution controls were both 1.
52	**VMX-preemption timer expired.** The preemption timer counted down to zero.
53	**INVVPID.** Guest software attempted to execute INVVPID.
54	**WBINVD or WBNOINVD.** Guest software attempted to execute WBINVD or WBNOINVD and the "WBINVD exiting" VM-execution control was 1.
55	**XSETBV.** Guest software attempted to execute XSETBV.
56	**APIC write.** Guest software completed a write to the virtual-APIC page that must be virtualized by VMM software (see Section 30.4.3.3).
57	**RDRAND.** Guest software attempted to execute RDRAND and the "RDRAND exiting" VM-execution control was 1.
58	**INVPCID.** Guest software attempted to execute INVPCID and the "enable INVPCID" and "INVLPG exiting" VM-execution controls were both 1.
59	**VMFUNC.** Guest software invoked a VM function with the VMFUNC instruction and the VM function either was not enabled or generated a function-specific condition causing a VM exit.
60	**ENCLS.** Guest software attempted to execute ENCLS, "enable ENCLS exiting" VM-execution control was 1, and either (1) EAX < 63 and the corresponding bit in the ENCLS-exiting bitmap is 1; or (2) EAX ≥ 63 and bit 63 in the ENCLS-exiting bitmap is 1.
61	**RDSEED.** Guest software attempted to execute RDSEED and the "RDSEED exiting" VM-execution control was 1.
62	**Page-modification log full.** The processor attempted to create a page-modification log entry and the value of the PML index was not in the range 0–511.
63	**XSAVES.** Guest software attempted to execute XSAVES, the "enable XSAVES/XRSTORS" was 1, and a bit was set in the logical-AND of the following three values: EDX:EAX, the IA32_XSS MSR, and the XSS-exiting bitmap.
64	**XRSTORS.** Guest software attempted to execute XRSTORS, the "enable XSAVES/XRSTORS" was 1, and a bit was set in the logical-AND of the following three values: EDX:EAX, the IA32_XSS MSR, and the XSS-exiting bitmap.
65	**PCONFIG.** Guest software attempted to execute PCONFIG, "enable PCONFIG" VM-execution control was 1, and either (1) EAX < 63 and the corresponding bit in the PCONFIG-exiting bitmap is 1; or (2) EAX ≥ 63 and bit 63 in the PCONFIG-exiting bitmap is 1.
66	**SPP-related event.** The processor attempted to determine an access's sub-page write permission and encountered an SPP miss or an SPP misconfiguration. See Section 29.3.4.2.
67	**UMWAIT.** Guest software attempted to execute UMWAIT and the "enable user wait and pause" and "RDTSC exiting" VM-execution controls were both 1.
68	**TPAUSE.** Guest software attempted to execute TPAUSE and the "enable user wait and pause" and "RDTSC exiting" VM-execution controls were both 1.
69	**LOADIWKEY.** Guest software attempted to execute LOADIWKEY and the "LOADIWKEY exiting" VM-execution control was 1.

Table C-1. Basic Exit Reasons (Contd.)

Basic Exit Reason	Description
70	**ENCLV.** Guest software attempted to execute ENCLV, "enable ENCLV exiting" VM-execution control was 1, and either (1) EAX < 63 and the corresponding bit in the ENCLV-exiting bitmap is 1; or (2) EAX ≥ 63 and bit 63 in the ENCLV-exiting bitmap is 1.
72	**ENQCMD PASID translation failure.** A VM exit occurred during PASID translation because the present bit was clear in a PASID-directory entry, the valid bit was clear in a PASID-table entry, or one of the entries set a reserved bit.
73	**ENQCMDS PASID translation failure.** A VM exit occurred during PASID translation because the present bit was clear in a PASID-directory entry, the valid bit was clear in a PASID-table entry, or one of the entries set a reserved bit.

INDEX

Numerics

16-bit code, mixing with 32-bit code, 22-1
32-bit code, mixing with 16-bit code, 22-1
32-bit physical addressing
    overview, 3-6
36-bit physical addressing
    overview, 3-6
64-bit mode
    call gates, 5-14
    code segment descriptors, 5-3, 10-12
    control registers, 2-13
    CR8 register, 2-13
    D flag, 5-4
    debug registers, 2-7
    descriptors, 5-3, 5-5
    DPL field, 5-4
    exception handling, 6-19
    external interrupts, 11-31
    fast system calls, 5-22
    GDTR register, 2-12, 2-13
    GP faults, causes of, 6-42
    IDTR register, 2-12
    initialization process, 2-8, 10-11
    interrupt and trap gates, 6-19
    interrupt controller, 11-31
    interrupt descriptors, 2-5
    interrupt handling, 6-19
    interrupt stack table, 6-22
    IRET instruction, 6-21
    L flag, 3-12, 5-4
    logical address translation, 3-7
    MOV CRn, 2-13, 11-31
    null segment checking, 5-6
    paging, 2-6
    reading counters, 2-27
    reading & writing MSRs, 2-27
    registers and mode changes, 10-12
    RFLAGS register, 2-11
    segment descriptor tables, 3-16, 5-3
    segment loading instructions, 3-9
    segments, 3-5
    stack switching, 5-19, 6-21
    SYSCALL and SYSRET, 2-7, 5-22
    SYSENTER and SYSEXIT, 5-21
    system registers, 2-7
    task gate, 8-19
    task priority, 2-20, 11-31
    task register, 2-13
    TSS
        stack pointers, 8-19
    See also: IA-32e mode, compatibility mode
8086
    emulation, support for, 21-1
    processor, exceptions and interrupts, 21-6
8086/8088 processor, 23-7
8087 math coprocessor, 23-7
82489DX, 23-27, 23-28
    Local APIC and I/O APICs, 11-4

A

A20M# signal, 21-2, 23-34, 24-4
Aborts
    description of, 6-5
    restarting a program or task after, 6-6
AC (alignment check) flag, EFLAGS register, 2-11, 6-50, 23-6
Access rights
    checking, 2-24
    checking caller privileges, 5-26
    description of, 5-24
    invalid values, 23-19
ADC instruction, 9-4
ADD instruction, 9-4
Address
    size prefix, 22-1
    space, of task, 8-16
Address translation
    in real-address mode, 21-2
    logical to linear, 3-7
    overview, 3-6
Addressing, segments, 1-8
Advanced power management
    C-state and Sub C-state, 15-35
    MWAIT extensions, 15-35
    See also: thermal monitoring
Advanced programmable interrupt controller (see I/O APIC or Local APIC)
Alignment
    check exception, 2-11, 6-50, 23-11, 23-21
    checking, 5-27
AM (alignment mask) flag
    CR0 control register, 2-15, 23-18
AND instruction, 9-4
APIC, 11-40, 11-41
APIC bus
    arbitration mechanism and protocol, 11-26, 11-33
    bus message format, 11-34, 11-47
    diagram of, 11-2, 11-3
    EOI message format, 11-15, 11-47
    nonfocused lowest priority message, 11-49
    short message format, 11-48
    SMI message, 32-2
    status cycles, 11-50
    structure of, 11-4
    See also
        local APIC
APIC flag, CPUID instruction, 11-7
APIC ID, 11-40, 11-44, 11-46
APIC (see I/O APIC or Local APIC)
ARPL instruction, 2-24, 5-27
    not supported in 64-bit mode, 2-24
Atomic operations
    automatic bus locking, 9-3
    effects of a locked operation on internal processor caches, 9-5
    guaranteed, description of, 9-2
    overview of, 9-1, 9-3
    software-controlled bus locking, 9-3
At-retirement
    counting, 20-101, 20-117
    events, 20-101, 20-106, 20-107, 20-117, 20-121
Auto HALT restart
    field, SMM, 32-14
    SMM, 32-14
Automatic bus locking, 9-3
Automatic thermal monitoring mechanism, 15-36

B

B (busy) flag
    TSS descriptor, 8-5, 8-11, 8-16, 9-3
B (default stack size) flag
    segment descriptor, 22-1, 23-33
B0-B3 (BP condition detected) flags
    DR6 register, 18-4
Backlink (see Previous task link)
Base address fields, segment descriptor, 3-10
BD (debug register access detected) flag, DR6 register, 18-4, 18-10

Binary numbers, 1-8
BINIT# signal, 2-26
BIOS role in microcode updates, 10-38
Bit order, 1-7
BOUND instruction, 2-5, 6-4, 6-30
BOUND range exceeded exception (#BR), 6-30
BP0#, BP1#, BP2#, and BP3# pins, 18-38, 18-40
Branch record
  branch trace message, 18-14
  IA-32e mode, 18-22
  saving, 18-16, 18-26, 18-27, 18-35
  saving as a branch trace message, 18-14
  structure, 18-36
  structure of in BTS buffer, 18-20
Branch trace message (see BTM)
Branch trace store (see BTS)
Breakpoint exception (#BP), 6-4, 6-28, 18-11
Breakpoints
  data breakpoint, 18-6
  data breakpoint exception conditions, 18-9
  description of, 18-1
  DR0-DR3 debug registers, 18-4
  example, 18-6
  exception, 6-28
  field recognition, 18-6, 18-7
  general-detect exception condition, 18-10
  instruction breakpoint, 18-6
  instruction breakpoint exception condition, 18-8
  I/O breakpoint exception conditions, 18-9
  LEN0 - LEN3 (Length) fields
    DR7 register, 18-6
  R/W0-R/W3 (read/write) fields
    DR7 register, 18-5
  single-step exception condition, 18-10
  task-switch exception condition, 18-10
BS (single step) flag, DR6 register, 18-4
BSP flag, IA32_APIC_BASE MSR, 11-8
BSWAP instruction, 23-4
BT (task switch) flag, DR6 register, 18-4, 18-10
BTC instruction, 9-4
BTF (single-step on branches) flag
  DEBUGCTLMSR MSR, 18-40
BTMs (branch trace messages)
  description of, 18-14
  enabling, 18-12, 18-24, 18-25, 18-35, 18-37, 18-38
  TR (trace message enable) flag
    MSR_DEBUGCTLA MSR, 18-35
    MSR_DEBUGCTLB MSR, 18-12, 18-37, 18-38
BTR instruction, 9-4
BTS buffer
  description of, 18-19
  introduction to, 18-11, 18-14
  records in, 18-20
  setting up, 18-24
  structure of, 18-20, 18-22, 20-21
BTS instruction, 9-4
BTS (branch trace store) facilities
  availability of, 18-34
  BTS_UNAVAILABLE flag,
    IA32_MISC_ENABLE MSR, 18-19
  introduction to, 18-11
  setting up BTS buffer, 18-24
  writing an interrupt service routine for, 18-25
BTS_UNAVAILABLE, 18-19
Built-in self-test (BIST)
  description of, 10-1
  performing, 10-5
Bus
  errors detected with MCA, 16-27
  hold, 23-35
  locking, 9-3, 23-35
Byte order, 1-7

C

C (conforming) flag, segment descriptor, 5-11
C1 flag, x87 FPU status word, 23-8, 23-14
C2 flag, x87 FPU status word, 23-8
Cache control, 12-20
  adaptive mode, L1 Data Cache, 12-18
  cache management instructions, 12-17, 12-18
  cache mechanisms in IA-32 processors, 23-30
  caching terminology, 12-5
  CD flag, CR0 control register, 12-10, 23-19
  choosing a memory type, 12-8
  CPUID feature flag, 12-18
  flags and fields, 12-10
  flushing TLBs, 12-19
  G (global) flag
    page-directory entries, 12-13
    page-table entries, 12-13
  internal caches, 12-1
  MemTypeGet() function, 12-29
  MemTypeSet() function, 12-31
  MESI protocol, 12-5, 12-9
  methods of caching available, 12-6
  MTRR initialization, 12-29
  MTRR precedences, 12-28
  MTRRs, description of, 12-20
  multiple-processor considerations, 12-32
  NW flag, CR0 control register, 12-13, 23-19
  operating modes, 12-12
  overview of, 12-1
  page attribute table (PAT), 12-33
  PCD flag
    CR3 control register, 12-13
    page-directory entries, 12-13, 12-33
    page-table entries, 12-13, 12-33
  PGE (page global enable) flag, CR4 control register, 12-13
  precedence of controls, 12-13
  preventing caching, 12-16
  protocol, 12-9
  PWT flag
    CR3 control register, 12-13
    page-directory entries, 12-33
    page-table entries, 12-33
  remapping memory types, 12-29
  setting up memory ranges with MTRRs, 12-22
  shared mode, L1 Data Cache, 12-18
  variable-range MTRRs, 12-23, 12-25
Caches, 2-7
  cache hit, 12-5
  cache line, 12-5
  cache line fill, 12-5
  cache write hit, 12-5
  description of, 12-1
  effects of a locked operation on internal processor caches, 9-5
  enabling, 10-7
  management, instructions, 2-25, 12-17
Caching
  cache control protocol, 12-9
  cache line, 12-5
  cache management instructions, 12-17
  cache mechanisms in IA-32 processors, 23-30
  caching terminology, 12-5
  choosing a memory type, 12-8
  flushing TLBs, 12-19
  implicit caching, 12-19
  internal caches, 12-1
  L1 (level 1) cache, 12-4
  L2 (level 2) cache, 12-4
  L3 (level 3) cache, 12-4
  methods of caching available, 12-6
  MTRRs, description of, 12-20
  operating modes, 12-12
  overview of, 12-1

self-modifying code, effect on, 12-18, 23-30
snooping, 12-6
store buffer, 12-20
TLBs, 12-5
UC (strong uncacheable) memory type, 12-6
UC- (uncacheable) memory type, 12-6
WB (write back) memory type, 12-7
WC (write combining) memory type, 12-7
WP (write protected) memory type, 12-7
write-back caching, 12-6
WT (write through) memory type, 12-7
Call gates
16-bit, interlevel return from, 23-33
accessing a code segment through, 5-15
description of, 5-13
for 16-bit and 32-bit code modules, 22-1
IA-32e mode, 5-14
introduction to, 2-4
mechanism, 5-15
privilege level checking rules, 5-16
CALL instruction, 2-5, 3-8, 5-10, 5-15, 5-20, 8-2, 8-9, 8-11, 22-5
Caller access privileges, checking, 5-26
Calls
16 and 32-bit code segments, 22-3
controlling operand-size attribute, 22-5
returning from, 5-20
Catastrophic shutdown detector
Thermal monitoring
catastrophic shutdown detector, 15-37
catastrophic shutdown detector, 15-36
CC0 and CC1 (counter control) fields, CESR MSR (Pentium processor), 20-137
CD (cache disable) flag, CR0 control register, 2-15, 10-7, 12-10, 12-12, 12-13, 12-16, 12-32, 23-18, 23-19, 23-30
CESR (control and event select) MSR (Pentium processor), 20-136, 20-137
CLFLSH feature flag, CPUID instruction, 10-8
CLFLUSH instruction, 2-16, 10-8, 12-17
CLI instruction, 6-7
Clocks
counting processor clocks, 20-138
Hyper-Threading Technology, 20-138
nominal CPI, 20-138
non-halted clockticks, 20-138
non-halted CPI, 20-138
non-sleep Clockticks, 20-138
time stamp counter, 20-138
CLTS instruction, 2-24, 5-24, 26-2, 26-7
Cluster model, local APIC, 11-24
CMOVcc instructions, 23-4
CMPXCHG instruction, 9-4, 23-4
CMPXCHG8B instruction, 9-4, 23-5
Code modules
16 bit vs. 32 bit, 22-1
mixing 16-bit and 32-bit code, 22-1
sharing data, mixed-size code segs, 22-3
transferring control, mixed-size code segs, 22-3
Code segments
accessing data in, 5-9
accessing through a call gate, 5-15
description of, 3-12
descriptor format, 5-2
descriptor layout, 5-2
direct calls or jumps to, 5-10
paging of, 2-6
pointer size, 22-4
privilege level checks
transferring control between code segs, 5-10
Compatibility
IA-32 architecture, 23-1
software, 1-7
Compatibility mode
code segment descriptor, 5-3
code segment descriptors, 10-12
control registers, 2-13
CS.L and CS.D, 10-12
debug registers, 2-25
EFLAGS register, 2-11
exception handling, 2-5
gates, 2-4
GDTR register, 2-12, 2-13
global and local descriptor tables, 2-4
IDTR register, 2-12
interrupt handling, 2-5
L flag, 3-12, 5-4
memory management, 2-6
operation, 10-12
segment loading instructions, 3-9
segments, 3-5
switching to, 10-12
SYSCALL and SYSRET, 5-22
SYSENTER and SYSEXIT, 5-21
system flags, 2-11
system registers, 2-7
task register, 2-13
See also: 64-bit mode, IA-32e mode
Condition code flags, x87 FPU status word
compatibility information, 23-8
Conforming code segments
accessing, 5-12
C (conforming) flag, 5-11
description of, 3-13
Context, task (see Task state)
Control registers
64-bit mode, 2-13
CR0, 2-13
CR1 (reserved), 2-13
CR2, 2-13
CR3 (PDBR), 2-6, 2-13
CR4, 2-13
description of, 2-13
introduction to, 2-6
Coprocessor segment
overrun exception, 6-35, 23-12
Counter mask field
PerfEvtSel0 and PerfEvtSel1 MSRs (P6 family processors), 20-5, 20-135
CPL
description of, 5-7
field, CS segment selector, 5-2
CPUID instruction
availability, 23-5
control register flags, 2-20
detecting features, 23-2
serializing instructions, 9-17
syntax for data, 1-9
CR0 control register, 23-8
description of, 2-13
introduction to, 2-6
state following processor reset, 10-2
CR1 control register (reserved), 2-13
CR2 control register
description of, 2-13
introduction to, 2-6
CR3 control register (PDBR)
associated with a task, 8-1, 8-3
description of, 2-13
in TSS, 8-4, 8-17
introduction to, 2-6
loading during initialization, 10-10
memory management, 2-6
page directory base address, 2-6
page table base address, 2-5
CR4 control register
description of, 2-13

enabling control functions, 23-2
inclusion in IA-32 architecture, 23-18
introduction to, 2-6
VMX usage of, 24-3
CR8 register, 2-7
64-bit mode, 2-13
compatibility mode, 2-13
description of, 2-13
task priority level bits, 2-20
when available, 2-13
CS register, 23-11
state following initialization, 10-5
C-state, 15-35
CTR0 and CTR1 (performance counters) MSRs (Pentium processor), 20-136, 20-138
Current privilege level (see CPL)

D

D (default operation size) flag
segment descriptor, 22-1, 23-33
Data breakpoint exception conditions, 18-9
Data segments
description of, 3-12
descriptor layout, 5-2
expand-down type, 3-11
paging of, 2-6
privilege level checking when accessing, 5-8
DE (debugging extensions) flag, CR4 control register, 2-17, 23-18, 23-20
Debug exception (#DB), 6-7, 6-25, 8-5, 18-8, 18-13, 18-41
Debug store (see DS)
DEBUGCTLMSR MSR, 18-39, 18-41
Debugging facilities
breakpoint exception (#BP), 18-1
debug exception (#DB), 18-1
DR6 debug status register, 18-1
DR7 debug control register, 18-1
exceptions, 18-8
INT3 instruction, 18-1
last branch, interrupt, and exception recording, 18-2, 18-11
masking debug exceptions, 6-7
overview of, 18-1
performance-monitoring counters, 20-1
registers
description of, 18-2
introduction to, 2-6
loading, 2-25
RF (resume) flag, EFLAGS, 18-1
see DS (debug store) mechanism
T (debug trap) flag, TSS, 18-1
TF (trap) flag, EFLAGS, 18-1
DEC instruction, 9-4
Denormal operand exception (#D), 23-10
Denormalized operand, 23-12
Device-not-available exception (#NM), 2-16, 2-24, 6-32, 10-7, 23-11, 23-12
DFR
Destination Format Register, 11-38, 11-41, 11-46
Digital readout bits, 15-43, 15-46
DIV instruction, 6-24
Divide configuration register, local APIC, 11-17
Divide-error exception (#DE), 6-24, 23-21
Double-fault exception (#DF), 6-33, 23-27
DPL (descriptor privilege level) field, segment descriptor, 3-11, 5-2, 5-4, 5-7
DR0-DR3 breakpoint-address registers, 18-1, 18-4, 18-38, 18-40, 18-41
DR4-DR5 debug registers, 18-4, 23-20
DR6 debug status register, 18-4
B0-B3 (BP detected) flags, 18-4
BD (debug register access detected) flag, 18-4
BS (single step) flag, 18-4
BT (task switch) flag, 18-4
debug exception (#DB), 6-25
reserved bits, 23-20
DR7 debug control register, 18-4
G0-G3 (global breakpoint enable) flags, 18-4
GD (general detect enable) flag, 18-5
GE (global exact breakpoint enable) flag, 18-5
L0-L3 (local breakpoint enable) flags, 18-4
LE local exact breakpoint enable) flag, 18-5
LEN0-LEN3 (Length) fields, 18-5
R/W0-R/W3 (read/write) fields, 18-5, 23-20
DS feature flag, CPUID instruction, 18-18, 18-34, 18-37, 18-39
DS save area, 18-20, 18-21, 18-22
DS (debug store) mechanism
availability of, 20-111
description of, 20-111
DS feature flag, CPUID instruction, 20-111
DS save area, 18-18, 18-21
IA-32e mode, 18-21
interrupt service routine (DS ISR), 18-25
setting up, 18-23
Dual-core technology
architecture, 9-32
logical processors supported, 9-25
MTRR memory map, 9-33
multi-threading feature flag, 9-25
performance monitoring, 20-125
specific features, 23-4
Dual-monitor treatment, 32-19
D/B (default operation size/default stack pointer size and/or upper bound) flag, segment descriptor, 3-11, 5-4

E

E (edge detect) flag
PerfEvtSel0 and PerfEvtSel1 MSRs (P6 family), 20-4
E (edge detect) flag, PerfEvtSel0 and PerfEvtSel1 MSRs (P6 family processors), 20-134
E (expansion direction) flag
segment descriptor, 5-2, 5-4
E (MTRRs enabled) flag
IA32_MTRR_DEF_TYPE MSR, 12-23
EFLAGS register
identifying 32-bit processors, 23-6
introduction to, 2-6
new flags, 23-6
saved in TSS, 8-4
system flags, 2-9
EIP register, 23-11
saved in TSS, 8-5
state following initialization, 10-5
EM (emulation) flag
CR0 control register, 2-16, 6-32, 10-6, 10-7, 13-1, 14-3
EMMS instruction, 13-3
Enhanced Intel SpeedStep Technology
ACPI 3.0 specification, 15-1
IA32_APERF MSR, 15-2
IA32_MPERF MSR, 15-2
IA32_PERF_CTL MSR, 15-1
IA32_PERF_STATUS MSR, 15-1
introduction, 15-1
multiple processor cores, 15-1
performance transitions, 15-1
P-state coordination, 15-1
See also: thermal monitoring
EOI
End Of Interrupt register, 11-38
Error code, 17-3, 17-7, 17-10, 17-13, 17-15
architectural MCA, 17-1, 17-3, 17-7, 17-10, 17-13, 17-15
decoding IA32_MCi_STATUS, 17-1, 17-3, 17-7, 17-10, 17-13, 17-15
exception, description of, 6-17
external bus, 17-1, 17-3, 17-7, 17-10, 17-13, 17-15
memory hierarchy, 17-3, 17-7, 17-10, 17-13, 17-15

pushing on stack, 23-32
watchdog timer, 17-1, 17-3, 17-7, 17-10, 17-13, 17-15
Error numbers
VM-instruction error field, 31-31
Error signals, 23-11
Error-reporting bank registers, 16-2
ERROR#
input, 23-16
output, 23-16
ES0 and ES1 (event select) fields, CESR MSR (Pentium processor), 20-137
ESR
Error Status Register, 11-39
ET (extension type) flag, CR0 control register, 2-15, 23-8
Event select field, PerfEvtSel0 and PerfEvtSel1 MSRs (P6 family processors), 20-4, 20-98, 20-134
Events
at-retirement, 20-117
at-retirement (Pentium 4 processor), 20-106
non-retirement (Pentium 4 processor), 20-106
Exception handler
calling, 6-11
defined, 6-1
flag usage by handler procedure, 6-17
machine-check exception handler, 16-28
machine-check exceptions (#MC), 16-28
machine-error logging utility, 16-28
procedures, 6-12
protection of handler procedures, 6-16
task, 6-17, 8-2
Exceptions
alignment check, 23-11
classifications, 6-5
compound error codes, 16-21
conditions checked during a task switch, 8-13
coprocessor segment overrun, 23-12
description of, 2-5, 6-1
device not available, 23-12
double fault, 6-33
error code, 6-17
execute-disable bit, 5-32
floating-point error, 23-12
general protection, 23-12
handler mechanism, 6-12
handler procedures, 6-12
handling, 6-11
handling in real-address mode, 21-4
handling in SMM, 32-11
handling in virtual-8086 mode, 21-11
handling through a task gate in virtual-8086 mode, 21-14
handling through a trap or interrupt gate in virtual-8086 mode, 21-12
IA-32e mode, 2-5
IDT, 6-9
initializing for protected-mode operation, 10-10
invalid-opcode, 23-5
masking debug exceptions, 6-7
masking when switching stack segments, 6-8
MCA error codes, 16-20
MMX instructions, 13-1
notation, 1-9
overview of, 6-1
priority of, 23-22
priority of, x87 FPU exceptions, 23-10
reference information on all exceptions, 6-23
reference information, 64-bit mode, 6-19
restarting a task or program, 6-5
segment not present, 23-12
simple error codes, 16-21
sources of, 6-4
summary of, 6-2
vectors, 6-1
Executable, 3-11
Execute-disable bit capability
conditions for, 5-30
CPUID flag, 5-30
detecting and enabling, 5-30
exception handling, 5-32
page-fault exceptions, 6-44
protection matrix for IA-32e mode, 5-31
protection matrix for legacy modes, 5-31
reserved bit checking, 5-31
Exit-reason numbers
VM entries & exits, C-1
Expand-down data segment type, 3-11
Extended signature table, 10-31
extended signature table, 10-31
External bus errors, detected with machine-check architecture, 16-27

F

F2XM1 instruction, 23-13
Family 06H, 17-1
Family 0FH, 17-1
microcode update facilities, 10-28
Faults
description of, 6-5
restarting a program or task after, 6-5
FCMOVcc instructions, 23-4
FCOMI instruction, 23-4
FCOMIP instruction, 23-4
FCOS instruction, 23-13
FDIV instruction, 23-11, 23-12
FE (fixed MTRRs enabled) flag, IA32_MTRR_DEF_TYPE MSR, 12-23
Feature
determination, of processor, 23-2
information, processor, 23-2
FINIT/FNINIT instructions, 23-8, 23-16
FIX (fixed range registers supported) flag, IA32_MTRRCAPMSR, 12-22
Fixed-range MTRRs
description of, 12-23
Flat segmentation model, 3-3
FLD instruction, 23-14
FLDENV instruction, 23-12
FLDL2E instruction, 23-14
FLDL2T instruction, 23-14
FLDLG2 instruction, 23-14
FLDLN2 instruction, 23-14
FLDPI instruction, 23-14
Floating-point error exception (#MF), 23-12
Floating-point exceptions
denormal operand exception (#D), 23-10
invalid operation (#I), 23-14
numeric overflow (#O), 23-10
numeric underflow (#U), 23-10
saved CS and EIP values, 23-11
FLUSH# pin, 6-3
FNSAVE instruction, 13-4
Focus processor, local APIC, 11-26
FORCEPR# log, 15-43, 15-46
FORCPR# interrupt enable bit, 15-44
FPATAN instruction, 23-13
FPREM instruction, 23-8, 23-11, 23-12, 23-13
FPREM1 instruction, 23-8, 23-13
FPTAN instruction, 23-8, 23-13
FRSTOR instruction, 13-4, 23-11, 23-12
FSAVE instruction, 13-3, 13-4
FSAVE/FNSAVE instructions, 23-11, 23-14
FSCALE instruction, 23-12
FSIN instruction, 23-13
FSINCOS instruction, 23-13
FSQRT instruction, 23-11, 23-12
FSTENV instruction, 13-3
FSTENV/FNSTENV instructions, 23-14
FTAN instruction, 23-8
FUCOM instruction, 23-13

FUCOMI instruction, 23-4
FUCOMIP instruction, 23-4
FUCOMP instruction, 23-13
FUCOMPP instruction, 23-13
FWAIT instruction, 6-32
FXAM instruction, 23-14
FXRSTOR instruction, 2-18, 2-19, 10-8, 13-3, 13-4, 14-2, 14-6
FXSAVE instruction, 2-18, 2-19, 10-8, 13-3, 13-4, 14-2, 14-6
FXSR feature flag, CPUID instruction, 10-8
FXTRACT instruction, 23-10, 23-14

G

G (global) flag
  page-directory entries, 12-13
  page-table entries, 12-13
G (granularity) flag
  segment descriptor, 3-10, 3-11, 5-2, 5-4
G0-G3 (global breakpoint enable) flags
  DR7 register, 18-4
Gate descriptors
  call gates, 5-13
  description of, 5-13
  IA-32e mode, 5-14
Gates, 2-4
  IA-32e mode, 2-4
GD (general detect enable) flag
  DR7 register, 18-5, 18-10
GDT
  description of, 2-3, 3-15
  IA-32e mode, 2-4
  index field of segment selector, 3-7
  initializing, 10-10
  paging of, 2-6
  pointers to exception/interrupt handlers, 6-12
  segment descriptors in, 3-9
  selecting with TI flag of segment selector, 3-7
  task switching, 8-9
  task-gate descriptor, 8-8
  TSS descriptors, 8-5
  use in address translation, 3-6
GDTR register
  description of, 2-3, 2-6, 2-12, 3-15
  IA-32e mode, 2-4, 2-12
  limit, 5-5
  loading during initialization, 10-10
  storing, 3-15
GE (global exact breakpoint enable) flag
  DR7 register, 18-5, 18-10
General-detect exception condition, 18-10
General-protection exception (#GP), 3-12, 5-6, 5-7, 5-11, 5-12, 6-9, 6-16, 6-41, 8-5, 18-3, 23-12, 23-21, 23-34, 23-35
General-purpose registers, saved in TSS, 8-4
Global control MSRs, 16-2
Global descriptor table register (see GDTR)
Global descriptor table (see GDT)

H

HALT state
  relationship to SMI interrupt, 32-3, 32-14
Hardware reset
  description of, 10-1
  processor state after reset, 10-2
  state of MTRRs following, 12-20
  value of SMBASE following, 32-4
Hexadecimal numbers, 1-8
high-temperature interrupt enable bit, 15-44, 15-47
HITM# line, 12-6
HLT instruction, 2-26, 5-24, 6-34, 26-2, 32-14
Hyper-Threading Technology
  architectural state of a logical processor, 9-33
  architecture description, 9-27
  caches, 9-31
  debug registers, 9-30
  description of, 9-25, 23-3, 23-4
  detecting, 9-36, 9-37, 9-42, 9-43
  executing multiple threads, 9-26
  execution-based timing loops, 9-55
  external signal compatibility, 9-32
  halting logical processors, 9-53
  handling interrupts, 9-26
  HLT instruction, 9-49
  IA32_MISC_ENABLE MSR, 9-30, 9-33
  initializing IA-32 processors with, 9-26
  introduction of into the IA-32 architecture, 23-3, 23-4
  local a, 9-28
  local APIC
    functionality in logical processor, 9-29
  logical processors, identifying, 9-38
  machine check architecture, 9-29
  managing idle and blocked conditions, 9-49
  mapping resources, 9-34
  memory ordering, 9-30
  microcode update resources, 9-30, 9-33, 10-35
  MP systems, 9-27
  MTRRs, 9-29, 9-33
  multi-threading feature flag, 9-25
  multi-threading support, 9-25
  PAT, 9-29
  PAUSE instruction, 9-49, 9-50
  performance monitoring, 20-120, 20-125
  performance monitoring counters, 9-30, 9-33
  placement of locks and semaphores, 9-55
  required operating system support, 9-51
  scheduling multiple threads, 9-54
  self modifying code, 9-31
  serializing instructions, 9-30
  spin-wait loops
    PAUSE instructions in, 9-52, 9-54
  thermal monitor, 9-32
  TLBs, 9-31

I

IA-32 Intel architecture
  compatibility, 23-1
  processors, 23-1
IA32e mode
  registers and mode changes, 10-12
IA-32e mode
  call gates, 5-14
  code segment descriptor, 5-3
  D flag, 5-4
  data structures and initialization, 10-11
  debug registers, 2-7
  debug store area
  descriptors, 2-4
  DPL field, 5-4
  exceptions during initialization, 10-12
  feature-enable register, 2-7
  gates, 2-4
  global and local descriptor tables, 2-4
  IA32_EFER MSR, 2-7, 5-30
  initialization process, 10-11
  interrupt stack table, 6-22
  interrupts and exceptions, 2-5
  IRET instruction, 6-21
  L flag, 3-12, 5-4
  logical address, 3-7
  MOV CRn, 10-11
  MTRR calculations, 12-27
  NXE bit, 5-30
  page level protection, 5-30

paging, 2-6
PDE tables, 5-31
PDP tables, 5-31
PML4 tables, 5-31
PTE tables, 5-31
registers and data structures, 2-1
segment descriptor tables, 3-16, 5-3
segment descriptors, 3-9
segment loading instructions, 3-9
segmentation, 3-5
stack switching, 5-19, 6-21
SYSCALL and SYSRET, 5-22
SYSENTER and SYSEXIT, 5-21
system descriptors, 3-14
system registers, 2-7
task switching, 8-19
task-state segments, 2-5
terminating mode operation, 10-12
See also: 64-bit mode, compatibility mode
IA32_APERF MSR, 15-2
IA32_APIC_BASE MSR, 9-19, 9-20, 11-6, 11-8
IA32_CLOCK_MODULATION MSR, 9-32, 15-7, 15-14, 15-15, 15-16, 15-17, 15-18, 15-21, 15-22, 15-23, 15-24, 15-40, 15-41, 15-43, 15-51, 15-52, 15-53, 15-54, 15-55
IA32_DEBUGCTL MSR, 28-28
IA32_DS_AREA MSR, 18-18, 18-19, 18-23, 20-104, 20-119
IA32_EFER MSR, 2-7, 2-8, 5-30, 28-28
IA32_FEATURE_CONTROL MSR, 24-3
IA32_KernelGSbase MSR, 2-7
IA32_LSTAR MSR, 2-7, 5-22
IA32_MCG_CAP MSR, 16-2, 16-28
IA32_MCG_CTL MSR, 16-2, 16-4
IA32_MCG_EAX MSR, 16-12
IA32_MCG_EBP MSR, 16-12
IA32_MCG_EBX MSR, 16-12
IA32_MCG_ECX MSR, 16-12
IA32_MCG_EDI MSR, 16-12
IA32_MCG_EDX MSR, 16-12
IA32_MCG_EFLAGS MSR, 16-12
IA32_MCG_EIP MSR, 16-12
IA32_MCG_ESI MSR, 16-12
IA32_MCG_ESP MSR, 16-12
IA32_MCG_MISC MSR, 16-12, 16-13
IA32_MCG_R10 MSR, 16-13
IA32_MCG_R11 MSR, 16-13
IA32_MCG_R12 MSR, 16-13
IA32_MCG_R13 MSR, 16-13
IA32_MCG_R14 MSR, 16-13
IA32_MCG_R15 MSR, 16-13
IA32_MCG_R8 MSR, 16-13
IA32_MCG_R9 MSR, 16-13
IA32_MCG_RAX MSR, 16-12
IA32_MCG_RBP MSR, 16-12
IA32_MCG_RBX MSR, 16-12
IA32_MCG_RCX MSR, 16-12
IA32_MCG_RDI MSR, 16-12
IA32_MCG_RDX MSR, 16-12
IA32_MCG_RESERVEDn MSR, 16-12
IA32_MCG_RFLAGS MSR, 16-12
IA32_MCG_RIP MSR, 16-12
IA32_MCG_RSI MSR, 16-12
IA32_MCG_RSP MSR, 16-12
IA32_MCG_STATUS MSR, 16-2, 16-4, 16-28, 16-30, 28-3
IA32_MCi_ADDR MSR, 16-9, 16-30
IA32_MCi_CTL, 16-5
IA32_MCi_CTL MSR, 16-5
IA32_MCi_MISC MSR, 16-9, 16-11, 16-12, 16-30
IA32_MCi_STATUS MSR, 16-6, 16-28, 16-30
decoding for Family 06H, 17-1
decoding for Family 0FH, 17-1, 17-3, 17-7, 17-10, 17-13, 17-15
IA32_MISC_ENABLE MSR, 15-1, 15-37, 18-19, 18-34, 20-104
IA32_MPERF MSR, 15-1, 15-2
IA32_MTRRCAP MSR, 12-21, 12-22
IA32_MTRR_DEF_TYPE MSR, 12-22
IA32_MTRR_FIXn, fixed ranger MTRRs, 12-23
IA32_PAT_CR MSR, 12-34
IA32_PEBS_ENABLE MSR, 20-102, 20-104, 20-119
IA32_PERF_CTL MSR, 15-1
IA32_PERF_STATUS MSR, 15-1
IA32_STAR MSR, 5-22
IA32_STAR_CS MSR, 2-7
IA32_SYSCALL_FLAG_MASK MSR, 2-7
IA32_SYSENTER_CS MSR, 5-21, 5-22, 28-22
IA32_SYSENTER_EIP MSR, 5-21
IA32_SYSENTER_ESP MSR, 5-21, 28-28, 28-29
IA32_THERM_INTERRUPT MSR, 15-39, 15-41, 15-42, 15-44
FORCPR# interrupt enable bit, 15-44
high-temperature interrupt enable bit, 15-44, 15-47
low-temperature interrupt enable bit, 15-44, 15-47
overheat interrupt enable bit, 15-44, 15-47
THERMTRIP# interrupt enable bit, 15-44, 15-47
threshold #1 interrupt enable bit, 15-44, 15-47
threshold #1 value, 15-44, 15-47
threshold #2 interrupt enable, 15-44, 15-47
threshold #2 value, 15-44, 15-47
IA32_THERM_STATUS MSR, 15-41, 15-42
digital readout bits, 15-43, 15-46
out-of-spec status bit, 15-43, 15-46
out-of-spec status log, 15-43, 15-46
PROCHOT# or FORCEPR# event bit, 15-42, 15-46
PROCHOT# or FORCEPR# log, 15-43, 15-46
resolution in degrees, 15-43
thermal status bit, 15-42, 15-45
thermal status log, 15-42, 15-46
thermal threshold #1 log, 15-43, 15-46
thermal threshold #1 status, 15-43, 15-46
thermal threshold #2 log, 15-43, 15-46
thermal threshold #2 status, 15-43, 15-46
validation bit, 15-43
IA32_VMX_BASIC MSR, 25-3, A-1, A-2
IA32_VMX_CR0_FIXED0 MSR, A-7
IA32_VMX_CR0_FIXED1 MSR, A-7
IA32_VMX_CR4_FIXED0 MSR, A-7
IA32_VMX_CR4_FIXED1 MSR, A-7
IA32_VMX_ENTRY_CTLS MSR, A-2, A-5, A-6
IA32_VMX_EXIT_CTLS MSR, A-2, A-4, A-5
IA32_VMX_MISC MSR, 25-6, 27-3, 27-14, 32-26, A-6
IA32_VMX_PINBASED_CTLS MSR, A-2, A-3
IA32_VMX_PROCBASED_CTLS MSR, 25-10, A-2, A-3, A-4, A-5, A-8, A-9
IA32_VMX_VMCS_ENUM MSR, A-7
ICR
Interrupt Command Register, 11-38, 11-41, 11-47
ID (identification) flag
EFLAGS register, 2-11, 23-6
IDIV instruction, 6-24, 23-21
IDT
64-bit mode, 6-19
call interrupt & exception-handlers from, 6-11
change base & limit in real-address mode, 21-5
description of, 6-9
handling NMIs during initialization, 10-9
initializing protected-mode operation, 10-10
initializing real-address mode operation, 10-8
introduction to, 2-5
limit, 23-27
paging of, 2-6
structure in real-address mode, 21-5
task switching, 8-10
task-gate descriptor, 8-8
types of descriptors allowed, 6-10
use in real-address mode, 21-4
IDTR register
description of, 2-12, 6-9
IA-32e mode, 2-12

introduction to, 2-5
limit, 5-5
loading in real-address mode, 21-5
storing, 3-16
IE (invalid operation exception) flag
x87 FPU status word, 23-8
IEEE Standard 754 for Binary Floating-Point Arithmetic, 23-9, 23-10, 23-12, 23-13, 23-14
IF (interrupt enable) flag
EFLAGS register, 2-10, 2-11, 6-7, 6-10, 6-17, 21-4, 21-19, 32-11
IN instruction, 9-16, 23-35, 26-2
INC instruction, 9-4
Index field, segment selector, 3-7
INIT interrupt, 11-3
Initial-count register, local APIC, 11-16
Initialization
built-in self-test (BIST), 10-1, 10-5
CS register state following, 10-5
EIP register state following, 10-5
example, 10-14
first instruction executed, 10-5
hardware reset, 10-1
IA-32e mode, 10-11
IDT, protected mode, 10-10
IDT, real-address mode, 10-8
Intel486 SX processor and Intel 487 SX math coprocessor, 23-16
location of software-initialization code, 10-5
machine-check initialization, 16-19
model and stepping information, 10-5
multitasking environment, 10-10, 10-11
overview, 10-1
paging, 10-10
processor state after reset, 10-2
protected mode, 10-9
real-address mode, 10-8
RESET# pin, 10-1
setting up exception- and interrupt-handling facilities, 10-10
x87 FPU, 10-5
INIT# pin, 6-3, 10-1
INIT# signal, 2-26, 24-4
INS instruction, 18-10
Instruction operands, 1-8
Instruction-breakpoint exception condition, 18-8
Instructions
new instructions, 23-4
obsolete instructions, 23-5
privileged, 5-23
serializing, 9-17, 9-30, 23-16
supported in real-address mode, 21-3
system, 2-7, 2-23
INS/INSB/INSW/INSD instruction, 26-2
INT 3 instruction, 2-5, 6-28, 18-8
INT instruction, 2-5, 5-10
INT n instruction, 3-8, 6-1, 6-4, 18-10
INT (APIC interrupt enable) flag, PerfEvtSel0 and PerfEvtSel1 MSRs (P6 family processors), 20-5, 20-135
INT15 and microcode updates, 10-42
INT3 instruction, 3-8, 6-4
Intel 287 math coprocessor, 23-7
Intel 387 math coprocessor system, 23-7
Intel 487 SX math coprocessor, 23-7, 23-16
Intel 8086 processor, 23-7
Intel Core Solo and Intel Core Duo processors
event mask (Umask), 20-96, 20-97
last branch, interrupt, exception recording, 18-37
notes on P-state transitions, 15-1
performance monitoring, 20-96, 20-97
sub-fields layouts, 20-96, 20-97
time stamp counters, 18-41
Intel NetBurst microarchitecture, 1-3
Intel software network link, 1-10
Intel SpeedStep Technology
See: Enhanced Intel SpeedStep Technology
Intel VTune Performance Analyzer
related information, 1-10
Intel Xeon processor, 1-1
last branch, interrupt, and exception recording, 18-34
time-stamp counter, 18-41
Intel Xeon processor MP
with 8MB L3 cache, 20-125, 20-127
Intel286 processor, 23-7
Intel386 DX processor, 23-7
Intel386 SL processor, 2-7
Intel486 DX processor, 23-7
Intel486 SX processor, 23-7, 23-16
Interprivilege level calls
call mechanism, 5-15
stack switching, 5-17
Interprocessor interrupt (IPIs), 11-1
Interprocessor interrupt (IPI)
in MP systems, 11-1
interrupt, 6-13
Interrupt Command Register, 11-38
Interrupt command register (ICR), local APIC, 11-19
Interrupt gates
16-bit, interlevel return from, 23-33
clearing IF flag, 6-7, 6-17
difference between interrupt and trap gates, 6-17
for 16-bit and 32-bit code modules, 22-1
handling a virtual-8086 mode interrupt or exception through, 21-12
in IDT, 6-10
introduction to, 2-4, 2-5
layout of, 6-10
Interrupt handler
calling, 6-11
defined, 6-1
flag usage by handler procedure, 6-17
procedures, 6-12
protection of handler procedures, 6-16
task, 6-17, 8-2
Interrupts
automatic bus locking, 23-35
control transfers between 16- and 32-bit code modules, 22-6
description of, 2-5, 6-1
destination, 11-26
distribution mechanism, local APIC, 11-25
enabling and disabling, 6-6
handling, 6-11
handling in real-address mode, 21-4
handling in SMM, 32-11
handling in virtual-8086 mode, 21-11
handling multiple NMIs, 6-6
handling through a task gate in virtual-8086 mode, 21-14
handling through a trap or interrupt gate in virtual-8086 mode, 21-12
IA-32e mode, 2-5, 2-12
IDT, 6-9
IDTR, 2-12
initializing for protected-mode operation, 10-10
interrupt descriptor table register (see IDTR)
interrupt descriptor table (see IDT)
list of, 6-2, 21-6
local APIC, 11-1
maskable hardware interrupts, 2-10
masking maskable hardware interrupts, 6-7
masking when switching stack segments, 6-8
message signalled interrupts, 11-34
on-die sensors for, 15-36
overview of, 6-1
priority, 11-28
propagation delay, 23-27
real-address mode, 21-6
restarting a task or program, 6-5
software, 6-58
sources of, 11-1

summary of, 6-2
thermal monitoring, 15-36
user defined, 6-1, 6-58
valid APIC interrupts, 11-15
vectors, 6-1
virtual-8086 mode, 21-6
INTO instruction, 2-5, 3-8, 6-4, 6-29, 18-10
INTR# pin, 6-2, 6-7
Invalid opcode exception (#UD), 2-16, 6-31, 6-53, 13-1, 18-4, 23-5, 23-11, 23-20, 23-21, 32-3
Invalid TSS exception (#TS), 6-36, 8-6
Invalid-operation exception, x87 FPU, 23-11, 23-14
INVD instruction, 2-25, 5-24, 12-17, 23-4
INVLPG instruction, 2-25, 5-24, 23-4, 26-3
IOPL (I/O privilege level) field, EFLAGS register
description of, 2-10
on return from exception, interrupt handler, 6-13
sensitive instructions in virtual-8086 mode, 21-10
virtual interrupt, 2-11
IPI (see interprocessor interrupt)
IRET instruction, 3-8, 6-7, 6-13, 6-17, 6-21, 8-10, 8-11, 9-17, 21-5, 21-19, 26-8
IRETD instruction, 2-10, 9-17
IRR
Interrupt Request Register, 11-39, 11-41, 11-47
IRR (interrupt request register), local APIC, 11-30
ISR
In Service Register, 11-38, 11-41, 11-47
I/O
breakpoint exception conditions, 18-9
in virtual-8086 mode, 21-10
instruction restart flag
SMM revision identifier field, 32-15
instruction restart flag, SMM revision identifier field, 32-15
IO_SMI bit, 32-12
I/O permission bit map, TSS, 8-5
map base address field, TSS, 8-5
restarting following SMI interrupt, 32-15
saving I/O state, 32-12
SMM state save map, 32-12
I/O APIC, 11-26
bus arbitration, 11-26
description of, 11-1
external interrupts, 6-3
information about, 11-1
interrupt sources, 11-2
local APIC and I/O APIC, 11-2, 11-3
overview of, 11-1
valid interrupts, 11-15
See also: local APIC

J

JMP instruction, 2-5, 3-8, 5-10, 5-15, 8-2, 8-9, 8-11

K

KEN# pin, 12-13, 23-36

L

L0-L3 (local breakpoint enable) flags
DR7 register, 18-4
L1 (level 1) cache
caching methods, 12-6
CPUID feature flag, 12-18
description of, 12-4
effect of using write-through memory, 12-9
introduction of, 23-30
invalidating and flushing, 12-17
MESI cache protocol, 12-9
shared and adaptive mode, 12-18
L2 (level 2) cache
caching methods, 12-6
description of, 12-4
disabling, 12-17
effect of using write-through memory, 12-9
introduction of, 23-30
invalidating and flushing, 12-17
MESI cache protocol, 12-9
L3 (level 3) cache
caching methods, 12-6
description of, 12-4
disabling and enabling, 12-13, 12-17
effect of using write-through memory, 12-9
introduction of, 23-31
invalidating and flushing, 12-17
MESI cache protocol, 12-9
LAR instruction, 2-25, 5-24
Larger page sizes
introduction of, 23-31
support for, 23-19
Last branch
interrupt & exception recording
description of, 18-11, 18-26, 18-28, 18-30, 18-31, 18-32, 18-35, 18-37, 18-38, 18-39
record stack, 18-17, 18-18, 18-26, 18-27, 18-34, 18-35, 18-37, 18-39
record top-of-stack pointer, 18-17, 18-27, 18-34, 18-38, 18-39
LastBranchFromIP MSR, 18-40, 18-41
LastBranchToIP MSR, 18-40, 18-41
LastExceptionFromIP MSR, 18-36, 18-38, 18-40, 18-41
LastExceptionToIP MSR, 18-36, 18-38, 18-40, 18-41
LBR (last branch/interrupt/exception) flag, DEBUGCTLMSR MSR, 18-13, 18-34, 18-40, 18-41
LDR
Logical Destination Register, 11-41, 11-45, 11-46
LDS instruction, 3-8, 5-8
LDT
associated with a task, 8-3
description of, 2-3, 2-5, 3-15
index into with index field of segment selector, 3-7
pointer to in TSS, 8-5
pointers to exception and interrupt handlers, 6-12
segment descriptors in, 3-9
segment selector field, TSS, 8-16
selecting with TI (table indicator) flag of segment selector, 3-7
setting up during initialization, 10-10
task switching, 8-9
task-gate descriptor, 8-8
use in address translation, 3-6
LDTR register
description of, 2-3, 2-5, 2-6, 2-12, 3-15
IA-32e mode, 2-12
limit, 5-5
storing, 3-16
LE (local exact breakpoint enable) flag, DR7 register, 18-5, 18-10
LEN0-LEN3 (Length) fields, DR7 register, 18-5, 18-6
LES instruction, 3-8, 5-8, 6-31
LFENCE instruction, 2-16, 9-7, 9-16, 9-17
LFS instruction, 3-8, 5-8
LGDT instruction, 2-24, 5-23, 9-17, 10-10, 23-20
LGS instruction, 3-8, 5-8
LIDT instruction, 2-24, 5-24, 6-9, 9-17, 10-9, 21-5, 23-27
Limit checking
description of, 5-4
pointer offsets are within limits, 5-25
Limit field, segment descriptor, 5-2, 5-4
Linear address
description of, 3-6
IA-32e mode, 3-7
introduction to, 2-6
Linear address space, 3-6
defined, 3-1
of task, 8-17

Link (to previous task) field, TSS, 6-17
Linking tasks
  mechanism, 8-15
  modifying task linkages, 8-16
LINT pins
  function of, 6-2
LLDT instruction, 2-24, 5-23, 9-17
LMSW instruction, 2-24, 5-24, 26-3, 26-8
Local APIC, 11-38
  64-bit mode, 11-32
  APIC_ID value, 9-34
  arbitration over the APIC bus, 11-26
  arbitration over the system bus, 11-26
  block diagram, 11-4
  cluster model, 11-24
  CR8 usage, 11-32
  current-count register, 11-16
  description of, 11-1
  detecting with CPUID, 11-7
  DFR (destination format register), 11-24
  divide configuration register, 11-17
  enabling and disabling, 11-8
  external interrupts, 6-2
  features
    Pentium 4 and Intel Xeon, 23-28
    Pentium and P6, 23-28
  focus processor, 11-26
  global enable flag, 11-8
  IA32_APIC_BASE MSR, 11-8
  initial-count register, 11-16
  internal error interrupts, 11-2
  interrupt command register (ICR), 11-19
  interrupt destination, 11-26
  interrupt distribution mechanism, 11-25
  interrupt sources, 11-2
  IRR (interrupt request register), 11-30
  I/O APIC, 11-1
  local APIC and 82489DX, 23-28
  local APIC and I/O APIC, 11-2, 11-3
  local vector table (LVT), 11-12
  logical destination mode, 11-23
  LVT (local-APIC version register), 11-11
  mapping of resources, 9-34
  MDA (message destination address), 11-23
  overview of, 11-1
  performance-monitoring counter, 20-136
  physical destination mode, 11-23
  receiving external interrupts, 6-2
  register address map, 11-6, 11-38
  shared resources, 9-34
  SMI interrupt, 32-2
  spurious interrupt, 11-32
  spurious-interrupt vector register, 11-8
  state after a software (INIT) reset, 11-10
  state after INIT-deassert message, 11-11
  state after power-up reset, 11-10
  state of, 11-33
  SVR (spurious-interrupt vector register), 11-8
  timer, 11-16
  timer generated interrupts, 11-1
  TMR (trigger mode register), 11-30
  valid interrupts, 11-15
  version register, 11-11
Local descriptor table register (see LDTR)
Local descriptor table (see LDT)
Local vector table (LVT)
  description of, 11-12
  thermal entry, 15-39
Local x2APIC, 11-31, 11-41, 11-46
Local xAPIC ID, 11-41
LOCK prefix, 2-26, 6-31, 9-1, 9-3, 9-15, 23-35
Locked (atomic) operations
  automatic bus locking, 9-3
  bus locking, 9-3
  effects on caches, 9-5
  loading a segment descriptor, 23-20
  on IA-32 processors, 23-35
  overview of, 9-1
  software-controlled bus locking, 9-3
LOCK# signal, 2-26, 9-1, 9-3, 9-4, 9-5
Logical address
  description of, 3-6
  IA-32e mode, 3-7
Logical address space, of task, 8-18
Logical destination mode, local APIC, 11-23
Logical processors
  per physical package, 9-25
Logical x2APIC ID, 11-46
low-temperature interrupt enable bit, 15-44, 15-47
LSL instruction, 2-25, 5-25
LSS instruction, 3-8, 5-8
LTR instruction, 2-24, 5-24, 8-7, 9-17, 10-11
LVT (see Local vector table)

M

Machine-check architecture
  availability of MCA and exception, 16-19
  compatibility with Pentium processor, 16-1
  compound error codes, 16-21
  CPUID flags, 16-19
  error codes, 16-20, 16-21
  error-reporting bank registers, 16-2
  error-reporting MSRs, 16-5
  extended machine check state MSRs, 16-12
  external bus errors, 16-27
  first introduced, 23-22
  global MSRs, 16-2
  initialization of, 16-19
  introduction of in IA-32 processors, 23-36
  logging correctable errors, 16-29, 16-31, 16-35
  machine-check exception handler, 16-28
  machine-check exception (#MC), 16-1
  MSRs, 16-2
  overview of MCA, 16-1
  Pentium processor exception handling, 16-29
  Pentium processor style error reporting, 16-13
  simple error codes, 16-21
  writing machine-check software, 16-27, 16-28
Machine-check exception (#MC), 6-52, 16-1, 16-19, 16-28, 23-21, 23-36
Mapping of shared resources, 9-34
Maskable hardware interrupts
  description of, 6-3
  handling with virtual interrupt mechanism, 21-15
  masking, 2-10, 6-7
MCA flag, CPUID instruction, 16-19
MCE flag, CPUID instruction, 16-19
MCE (machine-check enable) flag
  CR4 control register, 2-18, 23-18
MDA (message destination address)
  local APIC, 11-23
Memory, 12-1
Memory management
  introduction to, 2-6
  overview, 3-1
  paging, 3-1, 3-2
  registers, 2-11
  segments, 3-1, 3-2, 3-7
Memory ordering
  in IA-32 processors, 23-34
  overview, 9-5
  processor ordering, 9-5
  strengthening or weakening, 9-15
  write ordering, 9-5

Memory type range registers (see MTRRs)
Memory types
caching methods, defined, 12-6
choosing, 12-8
MTRR types, 12-21
selecting for Pentium III and Pentium 4 processors, 12-15
selecting for Pentium Pro and Pentium II processors, 12-14
UC (strong uncacheable), 12-6
UC- (uncacheable), 12-6
WB (write back), 12-7
WC (write combining), 12-7
WP (write protected), 12-7
writing values across pages with different memory types, 12-16
WT (write through), 12-7
MemTypeGet() function, 12-29
MemTypeSet() function, 12-31
MESI cache protocol, 12-5, 12-9
Message address register, 11-34
Message data register format, 11-35
Message signalled interrupts
message address register, 11-34
message data register format, 11-34
MFENCE instruction, 2-16, 9-7, 9-16, 9-17
Microcode update facilities
authenticating an update, 10-37
BIOS responsibilities, 10-38
calling program responsibilities, 10-39
checksum, 10-33
extended signature table, 10-31
family 0FH processors, 10-28
field definitions, 10-28
format of update, 10-28
function 00H presence test, 10-42
function 01H write microcode update data, 10-43
function 02H microcode update control, 10-46
function 03H read microcode update data, 10-47
general description, 10-28
HT Technology, 10-35
INT 15H-based interface, 10-42
overview, 10-27
process description, 10-28
processor identification, 10-32
processor signature, 10-32
return codes, 10-48
update loader, 10-34
update signature and verification, 10-36
update specifications, 10-37
VMX non-root operation, 26-11
Mixing 16-bit and 32-bit code
in IA-32 processors, 23-33
overview, 22-1
MMX technology
debugging MMX code, 13-5
effect of MMX instructions on pending x87 floating-point exceptions, 13-5
emulation of the MMX instruction set, 13-1
exceptions that can occur when executing MMX instructions, 13-1
introduction of into the IA-32 architecture, 23-2
register aliasing, 13-1
state, 13-1
state, saving and restoring, 13-3
system programming, 13-1
task or context switches, 13-4
using TS flag to control saving of MMX state, 14-7
Mode switching
example, 10-14
real-address and protected mode, 10-13
to SMM, 32-2
Model and stepping information, following processor initialization or reset , 10-5
Model-specific registers (see MSRs)
Modes of operation (see Operating modes)
MONITOR instruction, 26-3
MOV instruction, 3-8, 5-8
MOV (control registers) instructions, 2-24, 5-24, 9-17, 10-13
MOV (debug registers) instructions, 2-25, 5-24, 9-17, 18-10
MOVNTDQ instruction, 9-6, 12-17
MOVNTI instruction, 2-16, 9-6, 12-17
MOVNTPD instruction, 9-6, 12-17
MOVNTPS instruction, 9-6, 12-17
MOVNTQ instruction, 9-6, 12-17
MP (monitor coprocessor) flag
CR0 control register, 2-16, 2-17, 6-32, 10-6, 10-7, 13-1, 23-8
MSR
Model Specific Register, 11-37, 11-38
MSRs
description of, 10-7
introduction of in IA-32 processors, 23-36
introduction to, 2-6
machine-check architecture, 16-2
reading and writing, 2-20, 2-22, 2-27
reading & writing in 64-bit mode, 2-27
MSR_DEBUBCTLB MSR, 18-13, 18-29, 18-37, 18-39
MSR_DEBUGCTLA MSR, 18-12, 18-18, 18-24, 18-25, 18-34, 20-5, 20-9, 20-38, 20-50, 20-77, 20-81, 20-87, 20-101, 20-102
MSR_DEBUGCTLB MSR, 18-12, 18-37, 18-38
MSR_IFSB_CNTR7 MSR, 20-127
MSR_IFSB_CTRL6 MSR, 20-127
MSR_IFSB_DRDY0 MSR, 20-126
MSR_IFSB_DRDY1 MSR, 20-126
MSR_IFSB_IBUSQ0 MSR, 20-126
MSR_IFSB_IBUSQ1 MSR, 20-126
MSR_IFSB_ISNPQ0 MSR, 20-126
MSR_IFSB_ISNPQ1 MSR, 20-126
MSR_LASTBRANCH_n MSR, 18-18, 18-35, 18-36
MSR_LASTBRANCH_n_FROM_IP MSR, 18-17, 18-18, 18-35, 18-36
MSR_LASTBRANCH_n_TO_IP MSR, 18-17, 18-18, 18-35, 18-36
MSR_LASTBRANCH_TOS MSR, 18-35, 18-36
MSR_LER_FROM_LIP MSR, 18-36, 18-38
MSR_LER_TO_LIP MSR, 18-36, 18-38
MTRR feature flag, CPUID instruction, 12-21
MTRRcap MSR, 12-21
MTRRfix MSR, 12-23
MTRRs, 9-16
base & mask calculations, 12-26, 12-27
cache control, 12-13
description of, 10-8, 12-20
dual-core processors, 9-33
enabling caching, 10-7
feature identification, 12-21
fixed-range registers, 12-23
IA32_MTRRCAP MSR, 12-21
IA32_MTRR_DEF_TYPE MSR, 12-22
initialization of, 12-29
introduction of in IA-32 processors, 23-36
introduction to, 2-6
large page size considerations, 12-33
logical processors, 9-33
mapping physical memory with, 12-21
memory types and their properties, 12-21
MemTypeGet() function, 12-29
MemTypeSet() function, 12-31
multiple-processor considerations, 12-32
precedence of cache controls, 12-13
precedences, 12-28
programming interface, 12-29
remapping memory types, 12-29
state of following a hardware reset, 12-20
variable-range registers, 12-23, 12-25
Multi-core technology
See multi-threading support
Multiple-processor management
bus locking, 9-3
guaranteed atomic operations, 9-2

initialization
MP protocol, 9-18
procedure, 9-56
local APIC, 11-1
memory ordering, 9-5
MP protocol, 9-18
overview of, 9-1
SMM considerations, 32-16
Multiple-processor system
local APIC and I/O APICs, Pentium 4, 11-3
local APIC and I/O APIC, P6 family, 11-3
Multisegment model, 3-4
Multitasking
initialization for, 10-10, 10-11
initializing IA-32e mode, 10-11
linking tasks, 8-15
mechanism, description of, 8-2
overview, 8-1
setting up TSS, 10-10
setting up TSS descriptor, 10-10
Multi-threading support
executing multiple threads, 9-26
handling interrupts, 9-26
logical processors per package, 9-25
mapping resources, 9-34
microcode updates, 9-33
performance monitoring counters, 9-33
programming considerations, 9-34
See also: Hyper-Threading Technology and dual-core technology
MWAIT instruction, 26-3
power management extensions, 15-35
MXCSR register, 6-53, 10-8, 14-6

N

NaN, compatibility, IA-32 processors, 23-9
NE (numeric error) flag
CR0 control register, 2-15, 6-48, 10-6, 10-7, 23-8, 23-18
NEG instruction, 9-4
NetBurst microarchitecture (see Intel NetBurst microarchitecture)
NMI interrupt, 2-26, 11-3
description of, 6-2
handling during initialization, 10-9
handling in SMM, 32-11
handling multiple NMIs, 6-6
masking, 23-27
receiving when processor is shutdown, 6-34
reference information, 6-27
vector, 6-2
NMI# pin, 6-2, 6-27
Nominal CPI method, 20-139
Nonconforming code segments
accessing, 5-11
C (conforming) flag, 5-11
description of, 3-13
Non-halted clockticks, 20-139
setting up counters, 20-139
Non-Halted CPI method, 20-139
Nonmaskable interrupt (see NMI)
Non-precise event-based sampling
defined, 20-107
used for at-retirement counting, 20-117
writing an interrupt service routine for, 18-25
Non-retirement events, 20-106
Non-sleep clockticks, 20-139
NOT instruction, 9-4
Notation
bit and byte order, 1-7
conventions, 1-7
exceptions, 1-9
hexadecimal and binary numbers, 1-8
Instructions
operands, 1-8
reserved bits, 1-7
segmented addressing, 1-8
NT (nested task) flag
EFLAGS register, 2-10, 8-10, 8-11, 8-15
Null segment selector, checking for, 5-6
Numeric overflow exception (#O), 23-10
Numeric underflow exception (#U), 23-10
NV (invert) flag, PerfEvtSel0 MSR
(P6 family processors), 20-5, 20-135
NW (not write-through) flag
CR0 control register, 2-15, 10-7, 12-12, 12-13, 12-16, 12-32, 23-18, 23-19, 23-30
NXE bit, 5-30

O

Obsolete instructions, 23-5, 23-15
OF flag, EFLAGS register, 6-29
On die digital thermal sensor, 15-42
relevant MSRs, 15-42
sensor enumeration, 15-42
On-Demand
clock modulation enable bits, 15-40
On-demand
clock modulation duty cycle bits, 15-40
On-die sensors, 15-36
Opcodes
undefined, 23-5
Operands
instruction, 1-8
operand-size prefix, 22-1
Operating modes
64-bit mode, 2-7
compatibility mode, 2-7
IA-32e mode, 2-7, 2-8
introduction to, 2-7
protected mode, 2-7
SMM (system management mode), 2-7
transitions between, 2-8
virtual-8086 mode, 2-8
VMX operation
enabling and entering, 24-3
OR instruction, 9-4
OS (operating system mode) flag
PerfEvtSel0 and PerfEvtSel1 MSRs (P6 only), 20-4, 20-134
OSFXSR (FXSAVE/FXRSTOR support) flag
CR4 control register, 2-18, 10-8, 14-2
OSXMMEXCPT (SIMD floating-point exception support) flag, CR4 control register, 2-18, 6-53, 10-8, 14-3
OUT instruction, 9-16, 26-2
Out-of-spec status bit, 15-43, 15-46
Out-of-spec status log, 15-43, 15-46
OUTS/OUTSB/OUTSW/OUTSD instruction, 18-10, 26-2
Overflow exception (#OF), 6-29
Overheat interrupt enable bit, 15-44, 15-47

P

P (present) flag
page-directory entry, 6-44
page-table entry, 6-44
segment descriptor, 3-11
P5_MC_ADDR MSR, 16-13, 16-29
P5_MC_TYPE MSR, 16-13, 16-29
P6 family processors
compatibility with FP software, 23-7
description of, 1-1
last branch, interrupt, and exception recording, 18-39
PAE paging
feature flag, CR4 register, 2-18, 2-19
flag, CR4 control register, 3-6, 23-18, 23-19

Page attribute table (PAT)
compatibility with earlier IA-32 processors, 12-36
detecting support for, 12-34
IA32_PAT MSR, 12-34
introduction to, 12-33
memory types that can be encoded with, 12-34
MSR, 12-13
precedence of cache controls, 12-14
programming, 12-35
selecting a memory type with, 12-35
Page directories, 2-6
Page directory
base address (PDBR), 8-5
introduction to, 2-6
overview, 3-2
setting up during initialization, 10-10
Page directory pointers, 2-6
Page frame (see Page)
Page tables, 2-6
introduction to, 2-6
overview, 3-2
setting up during initialization, 10-10
Page-directory entries, 9-3, 12-5
Page-fault exception (#PF), 4-54, 6-44, 23-21
Pages
disabling protection of, 5-1
enabling protection of, 5-1
introduction to, 2-6
overview, 3-2
PG flag, CR0 control register, 5-1
split, 23-15
Page-table entries, 9-3, 12-5, 12-19
Paging
combining segment and page-level protection, 5-29
combining with segmentation, 3-5
defined, 3-1
IA-32e mode, 2-6
initializing, 10-10
introduction to, 2-6
large page size MTRR considerations, 12-33
mapping segments to pages, 4-54
page-fault exception, 6-44, 6-55, 6-56
page-level protection, 5-2, 5-3, 5-27
page-level protection flags, 5-28
virtual-8086 tasks, 21-7
Parameter
passing, between 16- and 32-bit call gates, 22-6
translation, between 16- and 32-bit code segments, 22-6
PAUSE instruction, 2-16, 26-3
PBi (performance monitoring/breakpoint pins) flags, DEBUGCTLMSR MSR, 18-38, 18-40
PC (pin control) flag, PerfEvtSel0 and PerfEvtSel1 MSRs (P6 family processors), 20-4, 20-135
PC0 and PC1 (pin control) fields, CESR MSR (Pentium processor), 20-137
PCD pin (Pentium processor), 12-13
PCD (page-level cache disable) flag
CR3 control register, 2-17, 12-13, 23-18, 23-30
page-directory entries, 10-7, 12-13, 12-33
page-table entries, 10-7, 12-13, 12-33, 23-31
PCE (performance monitoring counter enable) flag, CR4 control register, 2-18, 5-24, 20-109, 20-135
PCE (performance-monitoring counter enable) flag, CR4 control register, 23-18
PDBR (see CR3 control register)
PE (protection enable) flag, CR0 control register, 2-17, 5-1, 10-10, 10-13, 32-9
PEBS records, 18-22
PEBS (precise event-based sampling) facilities
availability of, 20-119
description of, 20-107, 20-119
DS save area, 18-18
IA-32e mode, 18-22
PEBS buffer, 18-19, 20-119
PEBS records, 18-18, 18-21
writing a PEBS interrupt service routine, 20-120
writing interrupt service routine, 18-25
PEBS_UNAVAILABLE flag
IA32_MISC_ENABLE MSR, 18-19
Pentium 4 processor, 1-1
compatibility with FP software, 23-7
last branch, interrupt, and exception recording, 18-34
time-stamp counter, 18-41
Pentium II processor, 1-3
Pentium III processor, 1-3
Pentium M processor
last branch, interrupt, and exception recording, 18-38
time-stamp counter, 18-41
Pentium Pro processor, 1-3
Pentium processor, 1-1, 23-7
compatibility with MCA, 16-1
performance-monitoring counters, 20-136
PerfCtr0 and PerfCtr1 MSRs
(P6 family processors), 20-134, 20-135
PerfEvtSel0 and PerfEvtSel1 MSRs
(P6 family processors), 20-134
PerfEvtSel0 and PerfEvtSel1 MSRs (P6 family processors), 20-134
Performance events
architectural, 20-1
Intel Core Solo and Intel Core Duo processors, 20-1
non-architectural, 20-1
Pentium 4 and Intel Xeon processors, 18-34
Pentium M processors, 18-38
Performance state, 15-1
Performance-monitoring counters
counted events (Pentium processors), 20-138
description of, 20-1, 20-2
interrupt, 11-1
introduction of in IA-32 processors, 23-37
monitoring counter overflow (P6 family processors), 20-136
overflow, monitoring (P6 family processors), 20-136
overview of, 2-7
P6 family processors, 20-133
Pentium II processor, 20-133
Pentium Pro processor, 20-133
Pentium processor, 20-136
reading, 2-26, 20-135
setting up (P6 family processors), 20-134
software drivers for, 20-135
starting and stopping, 20-135
PG (paging) flag
CR0 control register, 2-15, 5-1
PG (paging) flag, CR0 control register, 10-10, 10-13, 23-32, 32-9
PGE (page global enable) flag, CR4 control register, 2-18, 12-13, 23-18, 23-19
PhysBase field, IA32_MTRR_PHYSBASEn MTRR, 12-24, 12-26
Physical address extension
introduction to, 3-6
Physical address space
4 GBytes, 3-6
64 GBytes, 3-6
addressing, 2-6
defined, 3-1
description of, 3-6
IA-32e mode, 3-6
mapped to a task, 8-17
mapping with variable-range MTRRs, 12-23, 12-25
Physical destination mode, local APIC, 11-23
PhysMask
IA32_MTRR_PHYSMASKn MTRR, 12-24, 12-26
PM0/BP0 and PM1/BP1 (performance-monitor) pins (Pentium processor), 20-136, 20-137, 20-138
PML4 tables, 2-6
Pointers
code-segment pointer size, 22-4

limit checking, 5-25
validation, 5-24
POP instruction, 3-8
POPF instruction, 6-7, 18-10
Power consumption
software controlled clock, 15-36, 15-40
Precise event-based sampling (see PEBS)
PREFETCHh instruction, 2-16, 12-17
Previous task link field, TSS, 8-5, 8-15, 8-16
Privilege levels
checking when accessing data segments, 5-8
checking, for call gates, 5-15
checking, when transferring program control between code segments, 5-10
description of, 5-6
protection rings, 5-8
Privileged instructions, 5-23
Processor families
06H, 17-1
0FH, 17-1
Processor management
initialization, 10-1
local APIC, 11-1
microcode update facilities, 10-27
overview of, 9-1
See also: multiple-processor management
Processor ordering, description of, 9-6
PROCHOT# log, 15-43, 15-46
PROCHOT# or FORCEPR# event bit, 15-42, 15-46
Protected mode
IDT initialization, 10-10
initialization for, 10-9
mixing 16-bit and 32-bit code modules, 22-1
mode switching, 10-13
PE flag, CR0 register, 5-1
switching to, 5-1, 10-13
system data structures required during initialization, 10-9
Protection
combining segment & page-level, 5-29
disabling, 5-1
enabling, 5-1
flags used for page-level protection, 5-2, 5-3
flags used for segment-level protection, 5-2
IA-32e mode, 5-3
of exception, interrupt-handler procedures, 6-16
overview of, 5-1
page level, 5-1, 5-27, 5-28, 5-30
page level, overriding, 5-29
page-level protection flags, 5-28
read/write, page level, 5-28
segment level, 5-1
user/supervisor type, 5-28
Protection rings, 5-8
PSE (page size extension) flag
CR4 control register, 2-17, 12-20, 23-18, 23-19
PSE-36 page size extension, 3-6
Pseudo-functions
VMfail, 31-2
VMfailInvalid, 31-2
VMfailValid, 31-2
VMsucceed, 31-2
Pseudo-infinity, 23-9
Pseudo-NaN, 23-9
Pseudo-zero, 23-9
P-state, 15-1
PUSH instruction, 23-7
PUSHF instruction, 6-7, 23-7
PVI (protected-mode virtual interrupts) flag
CR4 control register, 2-11, 2-17, 23-18
PWT pin (Pentium processor), 12-13
PWT (page-level write-through) flag
CR3 control register, 2-17, 12-13, 23-18, 23-30
page-directory entries, 10-7, 12-13, 12-33
page-table entries, 10-7, 12-33, 23-31

Q

QNaN, compatibility, IA-32 processors, 23-9

R

RDMSR instruction, 2-20, 2-22, 2-27, 5-24, 18-36, 18-40, 18-42, 20-109, 20-134, 20-135, 20-136, 23-5, 23-36, 26-4, 26-9
RDPMC instruction, 2-26, 5-24, 20-109, 20-134, 20-135, 23-4, 23-18, 23-37, 26-4
in 64-bit mode, 2-27
RDTSC instruction, 2-26, 5-24, 18-42, 23-5, 26-4, 26-10
in 64-bit mode, 2-27
reading sensors, 15-42
Read/write
protection, page level, 5-28
rights, checking, 5-25
Real-address mode
8086 emulation, 21-1
address translation in, 21-2
description of, 21-1
exceptions and interrupts, 21-6
IDT initialization, 10-8
IDT, changing base and limit of, 21-5
IDT, structure of, 21-5
IDT, use of, 21-4
initialization, 10-8
instructions supported, 21-3
interrupt and exception handling, 21-4
interrupts, 21-6
introduction to, 2-7
mode switching, 10-13
native 16-bit mode, 22-1
overview of, 21-1
registers supported, 21-3
switching to, 10-14
Recursive task switching, 8-16
Related literature, 1-10
Requested privilege level (see RPL)
Reserved bits, 1-7, 23-2
RESET# pin, 6-3, 23-16
RESET# signal, 2-26
Resolution in degrees, 15-43
Restarting program or task, following an exception or interrupt, 6-5
Restricting addressable domain, 5-28
RET instruction, 5-10, 5-20, 22-6
Returning
from a called procedure, 5-20
from an interrupt or exception handler, 6-13
RF (resume) flag
EFLAGS register, 2-10, 6-7
RPL
description of, 3-8, 5-8
field, segment selector, 5-2
RSM instruction, 2-26, 9-17, 23-5, 26-4, 32-1, 32-2, 32-3, 32-13, 32-15, 32-18
RsvdZ, 11-40
R/S# pin, 6-3
R/W (read/write) flag
page-directory entry, 5-1, 5-2, 5-28
page-table entry, 5-1, 5-2, 5-28
R/W0-R/W3 (read/write) fields
DR7 register, 18-5, 23-20

S

S (descriptor type) flag
segment descriptor, 3-11, 3-12, 5-2, 5-5
SBB instruction, 9-4
Segment descriptors

access rights, 5-24
access rights, invalid values, 23-19
automatic bus locking while updating, 9-3
base address fields, 3-10
code type, 5-2
data type, 5-2
description of, 2-4, 3-9
DPL (descriptor privilege level) field, 3-11, 5-2
D/B (default operation size/default stack pointer size and/or upper bound) flag, 3-11, 5-4
E (expansion direction) flag, 5-2, 5-4
G (granularity) flag, 3-11, 5-2, 5-4
limit field, 5-2, 5-4
loading, 23-20
P (segment-present) flag, 3-11
S (descriptor type) flag, 3-11, 3-12, 5-2, 5-5
segment limit field, 3-10
system type, 5-2
tables, 3-14
TSS descriptor, 8-5, 8-6
type field, 3-10, 3-12, 5-2, 5-5
type field, encoding, 3-14
when P (segment-present) flag is clear, 3-11
Segment limit
checking, 2-24
field, segment descriptor, 3-10
Segment not present exception (#NP), 3-11
Segment registers
description of, 3-8
IA-32e mode, 3-9
saved in TSS, 8-4
Segment selectors
description of, 3-7
index field, 3-7
null, 5-6
null in 64-bit mode, 5-6
RPL field, 3-8, 5-2
TI (table indicator) flag, 3-7
Segmented addressing, 1-8
Segment-not-present exception (#NP), 6-38
Segments
64-bit mode, 3-5
basic flat model, 3-3
code type, 3-12
combining segment, page-level protection, 5-29
combining with paging, 3-5
compatibility mode, 3-5
data type, 3-12
defined, 3-1
disabling protection of, 5-1
enabling protection of, 5-1
mapping to pages, 4-54
multisegment usage model, 3-4
protected flat model, 3-3
segment-level protection, 5-2, 5-3
segment-not-present exception, 6-38
system, 2-4
types, checking access rights, 5-24
typing, 5-5
using, 3-2
wraparound, 23-34
SELF IPI register, 11-38
Self-modifying code, effect on caches, 12-18
Serializing, 9-17
Serializing instructions
CPUID, 9-17
HT technology, 9-30
non-privileged, 9-17
privileged, 9-17
SF (stack fault) flag, x87 FPU status word, 23-8
SFENCE instruction, 2-16, 9-7, 9-16, 9-17
SGDT instruction, 2-24, 3-15
Shared resources
mapping of, 9-34
Shutdown
resulting from double fault, 6-34
resulting from out of IDT limit condition, 6-34
SIDT instruction, 2-24, 3-16, 6-9
SIMD floating-point exception (#XM), 2-18, 6-53, 10-8
SIMD floating-point exceptions
description of, 6-53, 14-5
handler, 14-3
support for, 2-18
Single-stepping
breakpoint exception condition, 18-10
on branches, 18-14
on exceptions, 18-14
on interrupts, 18-14
TF (trap) flag, EFLAGS register, 18-10
SLDT instruction, 2-24
SLTR instruction, 3-16
SMBASE
default value, 32-4
relocation of, 32-14
SMI handler
description of, 32-1
execution environment for, 32-9
exiting from, 32-3
VMX treatment of, 32-16
SMI interrupt, 2-26, 11-3
description of, 32-1, 32-2
IO_SMI bit, 32-12
priority, 32-3
switching to SMM, 32-2
synchronous and asynchronous, 32-12
VMX treatment of, 32-16
SMI# pin, 6-3, 32-2, 32-15
SMM
asynchronous SMI, 32-12
auto halt restart, 32-14
executing the HLT instruction in, 32-14
exiting from, 32-3
handling exceptions and interrupts, 32-11
introduction to, 2-7
I/O instruction restart, 32-15
I/O state implementation, 32-12
native 16-bit mode, 22-1
overview of, 32-1
revision identifier, 32-13
revision identifier field, 32-13
switching to, 32-2
switching to from other operating modes, 32-2
synchronous SMI, 32-12
VMX operation
default RSM treatment, 32-18
default SMI delivery, 32-17
dual-monitor treatment, 32-19
overview, 32-2
protecting CR4.VMXE, 32-19
RSM instruction, 32-18
SMM monitor, 32-2
SMM VM exits, 28-1, 32-19
SMM-transfer VMCS, 32-19
SMM-transfer VMCS pointer, 32-19
VMCS pointer preservation, 32-17
VMX-critical state, 32-17
SMRAM
caching, 32-8
state save map, 32-4
structure of, 32-4
SMSW instruction, 2-24, 26-10
SNaN, compatibility, IA-32 processors, 23-9, 23-14
Snooping mechanism, 12-6
Software controlled clock

modulation control bits, 15-40
power consumption, 15-36, 15-40
Software interrupts, 6-4
Software-controlled bus locking, 9-3
Split pages, 23-15
Spurious interrupt, local APIC, 11-32
SSE extensions
checking for with CPUID, 14-2
checking support for FXSAVE/FXRSTOR, 14-2
CPUID feature flag, 10-8
EM flag, 2-16
emulation of, 14-6
facilities for automatic saving of state, 14-6, 14-7
initialization, 10-8
introduction of into the IA-32 architecture, 23-3
providing exception handlers for, 14-4, 14-5
providing operating system support for, 14-1
saving and restoring state, 14-6
saving state on task, context switches, 14-6
SIMD Floating-point exception (#XM), 6-53
using TS flag to control saving of state, 14-7
SSE feature flag
CPUID instruction, 14-2
SSE2 extensions
checking for with CPUID, 14-2
checking support for FXSAVE/FXRSTOR, 14-2
CPUID feature flag, 10-8
EM flag, 2-16
emulation of, 14-6
facilities for automatic saving of state, 14-6, 14-7
initialization, 10-8
introduction of into the IA-32 architecture, 23-3
providing exception handlers for, 14-4, 14-5
providing operating system support for, 14-1
saving and restoring state, 14-6
saving state on task, context switches, 14-6
SIMD Floating-point exception (#XM), 6-53
using TS flag to control saving state, 14-7
SSE2 feature flag
CPUID instruction, 14-2
SSE3 extensions
checking for with CPUID, 14-2
CPUID feature flag, 10-8
EM flag, 2-16
emulation of, 14-6
example verifying SS3 support, 9-46, 9-50, 15-2
facilities for automatic saving of state, 14-6, 14-7
initialization, 10-8
introduction of into the IA-32 architecture, 23-3
providing exception handlers for, 14-4, 14-5
providing operating system support for, 14-1
saving and restoring state, 14-6
saving state on task, context switches, 14-6
using TS flag to control saving of state, 14-7
SSE3 feature flag
CPUID instruction, 14-2
Stack fault exception (#SS), 6-40
Stack fault, x87 FPU, 23-8, 23-13
Stack pointers
privilege level 0, 1, and 2 stacks, 8-5
size of, 3-11
Stack segments
paging of, 2-6
privilege level check when loading SS register, 5-10
size of stack pointer, 3-11
Stack switching
exceptions/interrupts when switching stacks, 6-8
IA-32e mode, 6-21
inter-privilege level calls, 5-17
Stack-fault exception (#SS), 23-34
Stacks
error code pushes, 23-32
faults, 6-40
for privilege levels 0, 1, and 2, 5-17
interlevel RET/IRET
from a 16-bit interrupt or call gate, 23-33
interrupt stack table, 64-bit mode, 6-22
management of control transfers for
16- and 32-bit procedure calls, 22-4
operation on pushes and pops, 23-32
pointers to in TSS, 8-5
stack switching, 5-17, 6-21
usage on call to exception
or interrupt handler, 23-33
Stepping information, following processor initialization or reset, 10-5
STI instruction, 6-7
Store buffer
caching terminology, 12-5
characteristics of, 12-4
description of, 12-5, 12-20
in IA-32 processors, 23-34
location of, 12-1
operation of, 12-20
STPCLK# pin, 6-3
STR instruction, 2-24, 3-16, 8-7
Strong uncached (UC) memory type
description of, 12-6
effect on memory ordering, 9-16
use of, 10-8, 12-8
Sub C-state, 15-35
SUB instruction, 9-4
Supervisor mode
description of, 5-28
U/S (user/supervisor) flag, 5-28
SVR (spurious-interrupt vector register), local APIC, 11-8, 23-28
SWAPGS instruction, 2-7
SYSCALL instruction, 2-7, 5-22
SYSENTER instruction, 3-8, 5-10, 5-20, 5-21
SYSENTER_CS_MSR, 5-21
SYSENTER_EIP_MSR, 5-21
SYSENTER_ESP_MSR, 5-21
SYSEXIT instruction, 3-8, 5-10, 5-20, 5-21
SYSRET instruction, 2-7, 5-22
System
architecture, 2-1, 2-2
data structures, 2-2
instructions, 2-7, 2-23
registers in IA-32e mode, 2-7
registers, introduction to, 2-6
segment descriptor, layout of, 5-2
segments, paging of, 2-6
System programming
MMX technology, 13-1
System-management mode (see SMM)

T

T (debug trap) flag, TSS, 8-5
Task gates
descriptor, 8-8
executing a task, 8-2
handling a virtual-8086 mode interrupt or exception through, 21-14
IA-32e mode, 2-5
in IDT, 6-10
introduction for IA-32e, 2-4
introduction to, 2-4, 2-5
layout of, 6-10
referencing of TSS descriptor, 6-17
Task management, 8-1
data structures, 8-3
mechanism, description of, 8-2
Task register, 3-16
description of, 2-13, 8-1, 8-7
IA-32e mode, 2-13

initializing, 10-11
introduction to, 2-6
Task switching
description of, 8-3
exception condition, 18-10
operation, 8-10
preventing recursive task switching, 8-16
saving MMX state on, 13-4
saving SSE/SSE2/SSE3 state
on task or context switches, 14-6
T (debug trap) flag, 8-5
Tasks
address space, 8-16
description of, 8-1
exception-handler task, 6-11
executing, 8-2
Intel 286 processor tasks, 23-37
interrupt-handler task, 6-11
interrupts and exceptions, 6-17
linking, 8-15
logical address space, 8-18
management, 8-1
mapping linear and physical address space, 8-17
restart following an exception or interrupt, 6-5
state (context), 8-2, 8-3
structure, 8-1
switching, 8-3
task management data structures, 8-3
TF (trap) flag, EFLAGS register, 2-9, 6-17, 18-10, 18-12, 18-35, 18-37, 18-38, 18-40, 21-4, 21-19, 32-11
Thermal monitoring
advanced power management, 15-35
automatic, 15-37
automatic thermal monitoring, 15-36
catastrophic shutdown detector, 15-36, 15-37
clock-modulation bits, 15-40
C-state, 15-35
detection of facilities, 15-41
Enhanced Intel SpeedStep Technology, 15-1
IA32_APERF MSR, 15-2
IA32_MPERF MSR, 15-1
IA32_THERM_INTERRUPT MSR, 15-42
IA32_THERM_STATUS MSR, 15-42
interrupt enable/disable flags, 15-39
interrupt mechanisms, 15-36
MWAIT extensions for, 15-35
on die sensors, 15-36, 15-42
overview of, 15-1, 15-36
performance state transitions, 15-38
sensor interrupt, 11-1
setting thermal thresholds, 15-42
software controlled clock modulation, 15-36, 15-40
status flags, 15-38
status information, 15-38, 15-39
stop clock mechanism, 15-36
thermal monitor 1 (TM1), 15-37
thermal monitor 2 (TM2), 15-37
TM flag, CPUID instruction, 15-41
Thermal status bit, 15-42, 15-45
Thermal status log bit, 15-42, 15-46
Thermal threshold #1 log, 15-43, 15-46
Thermal threshold #1 status, 15-43, 15-46
Thermal threshold #2 log, 15-43, 15-46
Thermal threshold #2 status, 15-43, 15-46
THERMTRIP# interrupt enable bit, 15-44, 15-47
thread timeout indicator, 17-3, 17-7, 17-10, 17-13, 17-15
Threshold #1 interrupt enable bit, 15-44, 15-47
Threshold #1 value, 15-44, 15-47
Threshold #2 interrupt enable, 15-44, 15-47
Threshold #2 value, 15-44, 15-47
TI (table indicator) flag, segment selector, 3-7
Timer, local APIC, 11-16
Time-stamp counter
counting clockticks, 20-139
description of, 18-41
IA32_TIME_STAMP_COUNTER MSR, 18-41
RDTSC instruction, 18-41
reading, 2-26
software drivers for, 20-135
TSC flag, 18-41
TSD flag, 18-41
TLBs
description of, 12-1, 12-5
flushing, 12-19
invalidating (flushing), 2-25
relationship to PGE flag, 23-19
relationship to PSE flag, 12-20
TM1 and TM2
See: thermal monitoring, 15-37
TMR
Trigger Mode Register, 11-31, 11-39, 11-41, 11-47
TMR (Trigger Mode Register), local APIC, 11-30
TPR
Task Priority Register, 11-38, 11-41
TR (trace message enable) flag
DEBUGCTLMSR MSR, 18-12, 18-35, 18-37, 18-38, 18-40
Trace cache, 12-4, 12-5
Transcendental instruction accuracy, 23-8, 23-14
Translation lookaside buffer (see TLB)
Trap gates
difference between interrupt and trap gates, 6-17
for 16-bit and 32-bit code modules, 22-1
handling a virtual-8086 mode interrupt or exception through, 21-12
in IDT, 6-10
introduction for IA-32e, 2-4
introduction to, 2-4, 2-5
layout of, 6-10
Traps
description of, 6-5
restarting a program or task after, 6-5
TS (task switched) flag
CR0 control register, 2-15, 2-24, 6-32, 13-1, 14-3, 14-7
TSD (time-stamp counter disable) flag
CR4 control register, 2-17, 5-24, 18-42, 23-18
TSS
16-bit TSS, structure of, 8-18
32-bit TSS, structure of, 8-3
64-bit mode, 8-19
CR3 control register (PDBR), 8-4, 8-17
description of, 2-4, 2-5, 8-1, 8-3
EFLAGS register, 8-4
EFLAGS.NT, 8-15
EIP, 8-5
executing a task, 8-2
floating-point save area, 23-12
format in 64-bit mode, 8-19
general-purpose registers, 8-4
IA-32e mode, 2-5
initialization for multitasking, 10-10
interrupt stack table, 8-19
invalid TSS exception, 6-36
IRET instruction, 8-15
I/O map base address field, 8-5, 23-29
I/O permission bit map, 8-5, 8-19
LDT segment selector field, 8-5, 8-16
link field, 6-17
order of reads/writes to, 23-29
pointed to by task-gate descriptor, 8-8
previous task link field, 8-5, 8-15, 8-16
privilege-level 0, 1, and 2 stacks, 5-17
referenced by task gate, 6-17
segment registers, 8-4
T (debug trap) flag, 8-5
task register, 8-7

using 16-bit TSSs in a 32-bit environment, 23-29
virtual-mode extensions, 23-29
TSS descriptor
B (busy) flag, 8-5
busy flag, 8-16
initialization for multitasking, 10-10
structure of, 8-5, 8-6
TSS segment selector
field, task-gate descriptor, 8-8
writes, 23-29
Type
checking, 5-5
field, IA32_MTRR_DEF_TYPE MSR, 12-22
field, IA32_MTRR_PHYSBASEn MTRR, 12-24, 12-26
field, segment descriptor, 3-10, 3-12, 3-14, 5-2, 5-5
of segment, 5-5

U

UC- (uncacheable) memory type, 12-6
UD2 instruction, 23-4
Uncached (UC-) memory type, 12-8
Uncached (UC) memory type (see Strong uncached (UC) memory type)
Undefined opcodes, 23-5
Unit mask field, PerfEvtSel0 and PerfEvtSel1 MSRs (P6 family processors)
, 20-4, 20-8, 20-10, 20-11, 20-12, 20-14, 20-25, 20-27, 20-34, 20-35, 20-36, 20-54, 20-56, 20-99, 20-100, 20-101, 20-134, 20-143, 20-144, 20-145, 20-146, 20-150
Un-normal number, 23-9
User mode
description of, 5-28
U/S (user/supervisor) flag, 5-28
User-defined interrupts, 6-1, 6-58
USR (user mode) flag, PerfEvtSel0 and PerfEvtSel1 MSRs (P6 family processors), 20-4, 20-8, 20-10, 20-11, 20-12, 20-25, 20-27, 20-34, 20-35, 20-36, 20-54, 20-56, 20-99, 20-100, 20-101, 20-134, 20-143, 20-144, 20-145, 20-146, 20-150
U/S (user/supervisor) flag
page-directory entry, 5-1, 5-2, 5-28
page-table entries, 21-8
page-table entry, 5-1, 5-2, 5-28

V

V (valid) flag
IA32_MTRR_PHYSMASKn MTRR, 12-24, 12-26
Variable-range MTRRs, description of, 12-23, 12-25
VCNT (variable range registers count) field, IA32_MTRRCAP MSR, 12-22
Vectors
exceptions, 6-1
interrupts, 6-1
VERR instruction, 2-25, 5-25
VERW instruction, 2-25, 5-25
VIF (virtual interrupt) flag
EFLAGS register, 2-11, 23-6, 23-7
VIP (virtual interrupt pending) flag
EFLAGS register, 2-11, 23-6, 23-7
Virtual memory, 2-6, 3-1, 3-2
Virtual-8086 mode
8086 emulation, 21-1
description of, 21-5
emulating 8086 operating system calls, 21-18
enabling, 21-6
entering, 21-8
exception and interrupt handling overview, 21-11
exceptions and interrupts, handling through a task gate, 21-14
exceptions and interrupts, handling through a trap or interrupt gate, 21-12
handling exceptions and interrupts through a task gate, 21-14
interrupts, 21-6
introduction to, 2-8
IOPL sensitive instructions, 21-10
I/O-port-mapped I/O, 21-11
leaving, 21-9
memory mapped I/O, 21-11
native 16-bit mode, 22-1
overview of, 21-1
paging of virtual-8086 tasks, 21-7
protection within a virtual-8086 task, 21-8
special I/O buffers, 21-11
structure of a virtual-8086 task, 21-7
virtual I/O, 21-10
VM flag, EFLAGS register, 2-10
Virtual-8086 tasks
paging of, 21-7
protection within, 21-8
structure of, 21-7
VM entries
basic VM-entry checks, 27-2
checking guest state
control registers, 27-9
debug registers, 27-9
descriptor-table registers, 27-13
MSRs, 27-9
non-register state, 27-13
RIP and RFLAGS, 27-13
segment registers, 27-11
checks on controls, host-state area, 27-2
registers and MSRs, 27-7
segment and descriptor-table registers, 27-8
VMX control checks, 27-2
exit-reason numbers, C-1
loading guest state, 27-16
control and debug registers, MSRs, 27-16
RIP, RSP, RFLAGS, 27-18
segment & descriptor-table registers, 27-17
loading MSRs, 27-19
failure cases, 27-19
VM-entry MSR-load area, 27-19
overview of failure conditions, 27-1
overview of steps, 27-1
VMLAUNCH and VMRESUME, 27-1
See also: VMCS, VMM, VM exits
VM exits
architectural state
existing before exit, 28-1
updating state before exit, 28-1
basic VM-exit information fields, 28-4
basic exit reasons, 28-4
exit qualification, 28-4
exception bitmap, 28-1
exceptions (faults, traps, and aborts), 26-5
exit-reason numbers, C-1
external interrupts, 26-6
IA-32 faults and VM exits, 26-1
INITs, 26-6
instructions that cause:
conditional exits, 26-2
unconditional exits, 26-2
interrupt-window exiting, 26-6
non-maskable interrupts (NMIs), 26-6
page faults, 26-5
start-up IPIs (SIPIs), 26-6
task switches, 26-6
See also: VMCS, VMM, VM entries
VM (virtual-8086 mode) flag
EFLAGS register, 2-8, 2-10
VMCALL instruction, 31-1
VMCLEAR instruction, 31-1
VMCS
error numbers, 31-31
field encodings, 1-7, B-1
16-bit guest-state fields, B-1
16-bit host-state fields, B-2

32-bit control fields, B-1, B-7
32-bit guest-state fields, B-8
32-bit read-only data fields, B-8
64-bit control fields, B-2
64-bit guest-state fields, B-5, B-6
natural-width control fields, B-9
natural-width guest-state fields, B-10
natural-width host-state fields, B-12
natural-width read-only data fields, B-10
format of VMCS region, 25-2
guest-state area, 25-3
guest non-register state, 25-6
guest register state, 25-4
host-state area, 25-3, 25-8
introduction, 25-1
migrating between processors, 25-28
software access to, 25-28
VMCS data, 25-2, 26-20
VMCS pointer, 25-1
VMCS region, 25-1
VMCS revision identifier, 25-2, 26-20
VM-entry control fields, 25-3, 25-22
entry controls, 25-23
entry controls for event injection, 25-24
entry controls for MSRs, 25-24
VM-execution control fields, 25-3, 25-9
controls for CR8 accesses, 25-14
CR3-target controls, 25-14
exception bitmap, 25-13
I/O bitmaps, 25-14
masks & read shadows CR0 & CR4, 25-14
pin-based controls, 25-9
processor-based controls, 25-10, 25-20
time-stamp counter offset, 25-14
VM-exit control fields, 25-3, 25-20
exit controls for MSRs, 25-22
VM-exit information fields, 25-3, 25-25
basic exit information, 25-25, C-1
basic VM-exit information, 25-25
exits due to instruction execution, 25-27
exits due to vectored events, 25-26
exits occurring during event delivery, 25-27
VM-instruction error field, 25-28
VM-instruction error field, 27-1, 31-31
VMREAD instruction
field encodings, 1-7, B-1
VMWRITE instruction
field encodings, 1-7, B-1
VMX-abort indicator, 25-2, 26-20
See also: VM entries, VM exits, VMM, VMX
VME (virtual-8086 mode extensions) flag, CR4 control register, 2-11, 2-17, 23-18
VMLAUNCH instruction, 31-1
VMM
VM exits, 28-1
See also: VMCS, VM entries, VM exits, VMX
VMPTRLD instruction, 31-1
VMPTRST instruction, 31-1
VMREAD instruction, 31-1
field encodings, B-1
VMRESUME instruction, 31-1
VMWRITE instruction, 31-1
field encodings, B-1
VMX
A20M# signal, 24-4
capability MSRs
overview, 24-2, A-1
IA32_VMX_BASIC MSR, 25-3, A-1, A-2
IA32_VMX_CR0_FIXED0 MSR, A-7
IA32_VMX_CR0_FIXED1 MSR, A-7
IA32_VMX_ENTRY_CTLS MSR, A-2, A-5, A-6
IA32_VMX_EXIT_CTLS MSR, A-2, A-4, A-5
IA32_VMX_MISC MSR, 25-6, 27-3, 27-14, 32-26, A-6
IA32_VMX_PINBASED_CTLS MSR, A-2, A-3
IA32_VMX_PROCBASED_CTLS MSR, 25-10, A-2, A-3, A-4, A-5, A-8, A-9
CPUID instruction, 24-2, A-1
CR4 control register, 24-3
CR4 fixed bits, A-7
entering operation, 24-3
guest software, 24-1
IA32_FEATURE_CONTROL MSR, 24-3
INIT# signal, 24-4
instruction set, 24-2
introduction, 24-1
microcode update facilities, 26-11
non-root operation, 24-1
event blocking, 26-12
instruction changes, 26-7
overview, 26-1
task switches not allowed, 26-12
see VM exits
operation restrictions, 24-3
root operation, 24-1
SMM
CR4.VMXE reserved, 32-19
overview, 32-2
RSM instruction, 32-18
VMCS pointer, 32-17
VMX-critical state, 32-17
testing for support, 24-2
virtual-machine control structure (VMCS), 24-2
virtual-machine monitor (VMM), 24-1
VM entries and exits, 24-1
VM exits, 28-1
VMCS pointer, 24-2
VMM life cycle, 24-2
VMXOFF instruction, 24-3
VMXON instruction, 24-3
VMXON pointer, 24-3
VMXON region, 24-3
See also:VMM, VMCS, VM entries, VM exits
VMXOFF instruction, 24-3, 31-1
VMXON instruction, 24-3, 31-1

W

WAIT/FWAIT instructions, 6-32, 23-8, 23-15, 23-16
WB (write back) memory type, 9-16, 12-7, 12-8
WB (write-back) pin (Pentium processor), 12-13
WBINVD instruction, 2-25, 5-24, 12-16, 12-17, 23-4
WB/WT# pins, 12-13
WC buffer (see Write combining (WC) buffer)
WC (write combining)
flag, IA32_MTRRCAP MSR, 12-22
memory type, 12-7, 12-8
WP (write protected) memory type, 12-7
WP (write protect) flag
CR0 control register, 2-15, 5-28, 23-18
Write
hit, 12-5
Write combining (WC) buffer, 12-4, 12-8
Write-back caching, 12-6
WRMSR instruction, 2-20, 2-22, 2-27, 5-24, 9-17, 18-34, 18-39, 18-42, 20-109, 20-134, 20-135, 20-136, 23-5, 23-36
WT (write through) memory type, 12-7, 12-8
WT# (write-through) pin (Pentium processor), 12-13

X

x2APIC ID, 11-40, 11-41, 11-44, 11-46
x2APIC Mode, 11-31, 11-37, 11-38, 11-40, 11-41, 11-44, 11-45, 11-46
x87 FPU
compatibility with IA-32 x87 FPUs and math coprocessors, 23-7

configuring the x87 FPU environment, 10-6
device-not-available exception, 6-32
effect of MMX instructions on pending x87 floating-point exceptions, 13-5
effects of MMX instructions on x87 FPU state, 13-3
effects of MMX, x87 FPU, FXSAVE, and FXRSTOR instructions on x87 FPU tag word, 13-3
error signals, 23-11
initialization, 10-5
instruction synchronization, 23-15
register stack, aliasing with MMX registers, 13-2
setting up for software emulation of x87 FPU functions, 10-6
using TS flag to control saving of x87 FPU state, 14-7
x87 floating-point error exception (#MF), 6-48
x87 FPU control word
compatibility, IA-32 processors, 23-9
x87 FPU floating-point error exception (#MF), 6-48
x87 FPU status word
condition code flags, 23-8
x87 FPU tag word, 23-9
XADD instruction, 9-4, 23-4
xAPIC, 11-38, 11-40
determining lowest priority processor, 11-25
interrupt control register, 11-21
introduction to, 11-4
message passing protocol on system bus, 11-33
new features, 23-28
spurious vector, 11-32
using system bus, 11-4
xAPIC Mode, 11-31, 11-37, 11-41, 11-44, 11-46
XCHG instruction, 9-3, 9-4, 9-16
XCR0, 2-19
XGETBV, 2-19, 2-23, 2-24
XMM registers, saving, 14-6
XOR instruction, 9-4
XSAVE, 2-19, 14-7, 14-8, 14-9, 14-10
XSETBV, 2-19, 2-21, 2-23, 2-27

Z

ZF flag, EFLAGS register, 5-25