HP AlphaServer SC

Installation Guide

Order Number: AA-RLAXE-TE

November 2003

This document describes how to install an HP AlphaServer SC system from the Hewlett-Packard Company.

Revision/Update Information:	This version supersedes the *HP AlphaServer SC Installation Guide* issued in September 2002 for HP AlphaServer SC Version 2.5.
Operating System and Version:	HP Tru64 UNIX Version 5.1B, Patch Kit 3
Software Version:	Version 2.6
Maximum Node Count:	1024 nodes
Node Type:	HP AlphaServer ES45 HP AlphaServer ES40 HP AlphaServer DS20L

Legal Notices

The information in this document is subject to change without notice.

Hewlett-Packard makes no warranty of any kind with regard to this manual, including, but not limited to, the implied warranties of merchantability and fitness for a particular purpose. Hewlett-Packard shall not be held liable for errors contained herein or direct, indirect, special, incidental or consequential damages in connection with the furnishing, performance, or use of this material.

Warranty

A copy of the specific warranty terms applicable to your Hewlett-Packard product and replacement parts can be obtained from your local Sales and Service Office.

Restricted Rights Legend

Use, duplication or disclosure by the U.S. Government is subject to restrictions as set forth in subparagraph (c) (1) (ii) of the Rights in Technical Data and Computer Software clause at DFARS 252.227-7013 for DOD agencies, and subparagraphs (c) (1) and (c) (2) of the Commercial Computer Software Restricted Rights clause at FAR 52.227-19 for other agencies.

HEWLETT-PACKARD COMPANY
3000 Hanover Street
Palo Alto, California 94304 U.S.A.

Use of this manual and media is restricted to this product only. Additional copies of the programs may be made for security and back-up purposes only. Resale of the programs, in their present form or with alterations, is expressly prohibited.

Copyright Notices

© Copyright 2003 Hewlett-Packard Development Company, L.P

Some information in this document is based on Platform documentation, which includes the following copyright notice: Copyright 1994 - 2003 Platform Computing Corporation.

The Load Sharing Facility (LSF) software product is developed by Platform Computing Corporation ("Platform"). LSF has been licensed by Platform to HP for inclusion in HP AlphaServer SC systems.

The HP MPI software that is included in this HP AlphaServer SC software release is based on the MPICH V1.2.4 implementation of MPI, which includes the following copyright notice:

© 1993 University of Chicago
© 1993 Mississippi State University

Permission is hereby granted to use, reproduce, prepare derivative works, and to redistribute to others. This software was authored by:

Argonne National Laboratory Group
W. Gropp: (630) 252-4318; FAX: (630) 252-7852; e-mail: gropp@mcs.anl.gov
E. Lusk: (630) 252-5986; FAX: (630) 252-7852; e-mail: lusk@mcs.anl.gov
Mathematics and Computer Science Division, Argonne National Laboratory, Argonne IL 60439

Mississippi State Group

N. Doss and A. Skjellum: (601) 325-8435; FAX: (601) 325-8997; e-mail: tony@erc.msstate.edu

Mississippi State University, Computer Science Department & NSF Engineering Research Center for Computational Field Simulation, P.O. Box 6176, Mississippi State MS 39762

GOVERNMENT LICENSE

Portions of this material resulted from work developed under a U.S. Government Contract and are subject to the following license: the Government is granted for itself and others acting on its behalf a paid-up, nonexclusive, irrevocable worldwide license in this computer software to reproduce, prepare derivative works, and perform publicly and display publicly.

DISCLAIMER

This computer code material was prepared, in part, as an account of work sponsored by an agency of the United States Government. Neither the United States, nor the University of Chicago, nor Mississippi State University, nor any of their employees, makes any warranty express or implied, or assumes any legal liability or responsibility for the accuracy, completeness, or usefulness of any information, apparatus, product, or process disclosed, or represents that its use would not infringe privately owned rights.

Trademark Notices

Microsoft®, Windows®, and Windows NT® are trademarks of Microsoft Corporation in the U. S. and/or other countries.

UNIX® is a registered trademark of The Open Group in the U. S. and/or other countries.

The following product names refer to specific versions of products developed by Quadrics Ltd ("Quadrics"). These products combined with technologies from HP form an integral part of the Supercomputing Systems produced by HP and Quadrics. These products have been licensed by Quadrics to HP for inclusion in HP AlphaServer SC systems.

- *Interconnect hardware developed by Quadrics, including switches and adapter cards*
- *Elan, which describes the PCI host adapter for use with the interconnect technology developed by Quadrics*
- *PFS or Parallel File System*
- *RMS or Resource Management System*

Contents

Preface xxi

1 Installation Overview

1.1 Installation Overview 1–2
1.2 License Requirements 1–3
1.3 HP AlphaServer SC Subsets 1–4
1.4 Base System Subsets 1–6
1.5 General Considerations 1–7

2 Pre-Installation Planning

2.1 Review the Release Notes 2–2
2.2 Assign the External Network IP Addresses 2–2
2.3 Assign the System Name and Default Cluster Aliases 2–2
2.3.1 System Name 2–3
2.3.2 Domain Types 2–4
2.3.3 Default Cluster Aliases 2–4
2.4 Plan the Local and Global Storage 2–7
2.4.1 Confirm the Disk Layout 2–8
2.4.2 Plan the Partition Sizing for Local Storage 2–10
2.4.3 Review the System Storage Rules 2–11
2.4.4 Plan the RAID Configuration 2–12
2.4.4.1 Plan the HSG80 RAID Configuration 2–12
2.4.4.2 Plan the HSV110 RAID Configuration 2–13
2.4.4.3 Plan the MSA1000 RAID Configuration 2–14
2.4.5 Choose the Storage Management Tools 2–15
2.4.5.1 Managing Storage Arrays and Associated HSG80 RAID Controllers 2–15
2.4.5.2 Using HP SANworks Command Scripter 2–16
2.4.5.3 Managing a Fibre Channel Switch 2–17
2.5 Choose the Root Password 2–17
2.6 Record the External Gateway IP Address 2–17

3 Physical Installation

3.1 Management Server 3–2
3.1.1 Standalone Management Server 3–2

3.1.2 Clustered Management Server . . . 3–3
3.2 Compute Nodes and File Serving Nodes . . . 3–4
3.3 Physical Installation Overview . . . 3–4
3.4 Connect the Management Network . . . 3–11
3.4.1 Cable the Management Network . . . 3–11
3.4.2 Configure the Summit Switch . . . 3–12
3.4.3 Configure the Procurve Switch . . . 3–14
3.5 Populate the HP AlphaServer SC PCI Slots . . . 3–17
3.5.1 HP AlphaServer ES40 PCI Slots . . . 3–17
3.5.2 HP AlphaServer ES45 PCI Slots . . . 3–18
3.5.3 HP AlphaServer DS20L PCI Slots . . . 3–20
3.6 Configure Hardware for a Dual-Rail Configuration . . . 3–20
3.7 Connect the HP AlphaServer SC Interconnect . . . 3–20
3.8 Connect the Node Console Port . . . 3–21
3.9 Configure the HP AlphaServer SC Interconnect Control Card with an IP Address . . . 3–22
3.10 Configure the Terminal Servers with an IP Address . . . 3–22
3.11 Connect the Fibre Channel Switches . . . 3–23
3.12 Verify Storage Component Revisions . . . 3–23
3.13 Configure SAN Switch Network Addressing . . . 3–24
3.13.1 Setting Network Addresses via a Serial Connection . . . 3–24
3.14 Switch Zoning . . . 3–26
3.15 Configure the System Storage on the HSG80 . . . 3–27
3.15.1 Configure the HSG80 RAID Controllers . . . 3–29
3.15.2 Configure the HSG80 RAID Storage . . . 3–34
3.16 Configure the System Storage on the HSV110 . . . 3–42
3.16.1 HSV110 Array Controller Storage . . . 3–42
3.16.1.1 Licenses . . . 3–44
3.16.1.2 The HSV Element Manager . . . 3–44
3.16.1.3 SANWorks Scripting Utility . . . 3–44
3.16.2 Configure the HSV110 RAID Controllers . . . 3–45
3.16.2.1 Locate the Example EVA Configuration Scripts . . . 3–45
3.16.2.2 Calculate the Minimal Storage Requirement . . . 3–46
3.16.2.3 Create Virtual Disk Units for the Management Cluster . . . 3–49
3.16.2.4 Edit the Configuration Script . . . 3–52
3.16.2.5 Run the Configuration Script . . . 3–58
3.17 Configure the System Storage on the MSA1000 . . . 3–59
3.17.1 Check the MSA1000 Controller Firmware . . . 3–61
3.17.2 Configure the MSA1000 RAID Storage . . . 3–61
3.17.3 Rename the Connections . . . 3–63

4 Upgrade Installation Procedure

4.1 Understanding the Upgrade Process . . . 4–2
4.1.1 Upgrade Versus Installation . . . 4–2

4.1.2 Upgrade Procedure Overview 4–2
4.1.3 Upgrade Restart 4–3
4.1.4 Upgrade States 4–3
4.1.4.1 Check the Upgrade State 4–4
4.1.5 Preserved and Unpreserved Files 4–4
4.1.6 Special Upgrade Mechanisms on Domains 4–5
4.1.7 Approximate Timing Guideline 4–7
4.2 Pre-Upgrade Audit 4–8
4.3 Preparing RIS for C2 Security 4–9
4.4 Upgrade with a Management Server 4–10
4.4.1 Back Up the Management Server 4–10
4.4.2 Upgrade the Management Server 4–10
4.4.2.1 Prepare for Upgrade 4–11
4.4.2.2 Perform the Pre-Upgrade Check 4–11
4.4.2.3 Back Up the SC Database 4–12
4.4.2.4 Remove the HP AlphaServer SC Software 4–13
4.4.2.5 Update the Tru64 UNIX Operating System 4–13
4.4.2.6 Install the Operating System Patch Software 4–14
4.4.2.7 Build the New Kernel and Reboot 4–16
4.4.2.8 Configure the RIS Server 4–17
4.4.2.9 Install the HP AlphaServer SC Software 4–17
4.4.2.10 Restore the SC Database 4–18
4.4.2.11 Migrate the SC Database 4–19
4.4.2.12 Register RIS Clients for the New RIS Environment 4–19
4.4.2.13 Build the New Kernel and Reboot 4–19
4.5 Upgrade with a Clustered Management Server 4–20
4.5.1 Back Up the Clustered Management Server 4–20
4.5.2 Upgrade the Clustered Management Server 4–20
4.5.2.1 Prepare for Upgrade 4–21
4.5.2.2 Perform the Pre-Upgrade Check 4–21
4.5.2.3 Back Up the SC Database 4–22
4.5.2.4 Remove the HP AlphaServer SC Software 4–23
4.5.2.5 Update the Tru64 UNIX Operating System 4–23
4.5.2.6 Install the Operating System Patch Software 4–25
4.5.2.7 Configure the RIS Server 4–26
4.5.2.8 Install the HP AlphaServer SC Software 4–27
4.5.2.9 Restore the SC Database 4–27
4.5.2.10 Migrate the SC Database 4–28
4.5.2.11 Register RIS Clients for the New RIS Environment 4–28
4.5.2.12 Build the New Kernel and Reboot 4–29
4.6 Upgrade without a Management Server 4–29
4.6.1 Back Up the First Domain 4–29
4.6.2 Upgrade the First Domain 4–30
4.6.2.1 Prepare for Upgrade 4–30

4.6.2.2 Perform the Pre-Upgrade Check 4–31
4.6.2.3 Back Up the SC Database 4–31
4.6.2.4 Install the Upgrade Subset on the First Domain 4–32
4.6.2.5 Disable Cookies 4–33
4.6.2.6 Configure the RIS Server 4–33
4.6.2.7 Update the Tru64 UNIX Operating System 4–34
4.6.2.8 Register RIS Clients for the New RIS Environment 4–37
4.7 Upgrading the Domains 4–37
4.7.1 Back Up the Domains 4–38
4.7.2 Upgrade all of the Domains 4–39
4.8 Recover from Failures during an Upgrade 4–41
4.8.1 Minor Failures: Re-add Members that Failed to Upgrade 4–41
4.8.2 Medium Failures: Re-run the sra upgrade Command 4–42
4.8.3 Serious Failures: Recover from Backup 4–42
4.8.4 Severe Failures: Full System Restoration 4–44
4.9 Post-Upgrade Tasks 4–45
4.9.1 Create Alternate Boot Partitions 4–46
4.9.2 Upgrade the Database Revision 4–46
4.9.3 Re-Add Members Deleted prior to Upgrade 4–46
4.9.4 Re-enable MSQL Cookie Mechanism 4–46
4.9.5 Upgrade the SCFS and PFS Filesystem Management Data 4–46
4.9.6 Add the cmf Archive entry into crontab 4–47
4.9.7 Add the rms Archive entry into crontab 4–47
4.9.8 Verify Network Configuration 4–48
4.9.9 Check that Members 2 and 3 Have a Vote 4–48
4.9.10 Configure Nodes into RMS Partitions 4–48
4.9.11 Configure and Diagnose the Interconnect 4–48
4.9.12 Setting Up the SC Monitor System 4–48
4.9.13 Assigning Cabinets in the SC Database 4–48
4.9.14 Reinstall Uninstalled Kits 4–49
4.9.15 Installing LSF for HP AlphaServer SC 4–49
4.9.16 Build and Deploy Generic Kernels 4–49

5 Installing: When the System Has a Management Server

5.1 Set Up the Management Server 5–2
5.1.1 Set the Console Variables 5–3
5.1.2 Check the System Firmware 5–4
5.1.3 Creating Bootable Devices on EMA/EVA Storage 5–4
5.1.4 Install the Tru64 UNIX Operating System 5–6
5.1.5 Customize the System Configuration 5–10
5.1.5.1 Register Licenses (PAKs) 5–10
5.1.5.2 Set Up Networks 5–14
5.1.5.3 Configure DNS (BIND) 5–17

5.1.5.4 Configure NTP 5–18
5.1.5.5 Configure NFS 5–18
5.1.5.6 Configure NIS 5–19
5.1.5.7 Configure Mail 5–21
5.1.5.8 Configure Printers 5–21
5.1.6 Install the Operating System Patch Software 5–22
5.1.7 Install and Configure the Clustered Management Server 5–22
5.1.7.1 Register the TruCluster Server Software License 5–23
5.1.7.2 Load the TruCluster Server Subsets 5–24
5.1.7.3 Install the TruCluster Server Patch Software 5–24
5.1.7.4 Configure the EVA Storage System Disks for the Management Cluster 5–25
5.1.7.5 Run the clu_create Command 5–26
5.1.7.6 Back Up Important Configuration Files on Member 1 5–27
5.1.7.7 Prevent Other Members Booting During Installation 5–28
5.1.7.8 Run the clu_add_member Command 5–28
5.1.7.9 Boot the New Member 5–29
5.1.7.10 Back Up Important Configuration Files on New Members 5–30
5.1.8 Configure the RIS Server 5–31
5.1.9 Install the HP AlphaServer SC System Software 5–32
5.1.10 Install the HP Fortran Run-Time Libraries 5–33
5.1.11 Install Layered Products (Optional) 5–33
5.1.12 Install the SANworks Storage System Scripting Utility 5–33
5.1.13 Define the RMS Master Node (rmshost) 5–34
5.1.14 Build the New Kernel and Reboot 5–35
5.2 Set Up the SC Database 5–36
5.3 Configure Out All Nodes During Installation 5–44
5.4 Check All Nodes in the HP AlphaServer SC System 5–44
5.4.1 Check the State of the Nodes 5–45
5.4.2 Check the System Firmware 5–45
5.5 Configure and Diagnose the HP AlphaServer SC Interconnect 5–46
5.5.1 Upgrading the HP AlphaServer SC Interconnect Control Processor Software 5–46
5.5.2 Creating an Interconnect Configuration Using SC Viewer 5–47
5.5.3 Confirming the Operation of the HP AlphaServer SC Interconnect 5–47
5.6 Set Up the SC Monitor System 5–48
5.6.1 Add a SAN Appliance as Monitored Devices 5–48
5.6.2 Change Terminal Servers Monitoring Distribution 5–48
5.6.3 Change Extreme Switches Monitoring Distribution 5–49
5.6.4 Activate the Changes 5–50
5.7 Assign Cabinets in the SC Database 5–51
5.7.1 Load the Physical Relationships 5–51
5.7.2 Populate Cabinets with Nodes 5–52
5.7.3 Populate Cabinets with Other Hardware 5–52

6 Installing: When the System Does Not Have a Management Server

6.1 Set Up Node 0 . . . 6–2
6.1.1 Set the Console Variables . . . 6–3
6.1.2 Check the System Firmware . . . 6–4
6.1.3 Install the Tru64 UNIX Operating System . . . 6–4
6.1.4 Customize the System Configuration . . . 6–8
6.1.4.1 Register Licenses (PAKs) . . . 6–8
6.1.4.2 Set Up Networks . . . 6–12
6.1.4.3 Configure DNS (BIND) . . . 6–14
6.1.4.4 Configure NTP . . . 6–15
6.1.4.5 Configure NFS . . . 6–16
6.1.4.6 Configure NIS . . . 6–16
6.1.4.7 Configure Mail . . . 6–17
6.1.4.8 Configure Printers . . . 6–18
6.1.5 Install the Latest Operating System Patch Software . . . 6–18
6.1.6 Configure the RIS Server . . . 6–19
6.1.7 Install the HP AlphaServer SC System Software . . . 6–20
6.1.8 Install the HP Fortran Run-Time Libraries . . . 6–21
6.1.9 Install Layered Products (Optional) . . . 6–21
6.1.10 Install the SANworks Storage System Scripting Utility . . . 6–21
6.1.11 Add sysconfigtab Parameters . . . 6–22
6.1.12 Define the RMS Master Node (rmshost) . . . 6–23
6.2 Set Up the SC Database . . . 6–24
6.3 Configure Out All Nodes During Installation . . . 6–31
6.4 Check All Nodes in the HP AlphaServer SC System, Except Node 0 . . . 6–31
6.4.1 Check the State of the Nodes . . . 6–31
6.4.2 Check the System Firmware . . . 6–32
6.5 Configure and Diagnose the HP AlphaServer SC Interconnect . . . 6–33
6.5.1 Upgrading the HP AlphaServer SC Interconnect Control Processor Software . . . 6–33
6.5.2 Creating an Interconnect Configuration Using SC Viewer . . . 6–34
6.5.3 Confirming the Operation of the HP AlphaServer SC Interconnect . . . 6–34
6.6 Set Up the SC Monitor System . . . 6–35
6.6.1 Add a SAN Appliance as Monitored Devices . . . 6–35
6.6.2 Change Terminal Servers Monitoring Distribution . . . 6–35
6.6.3 Change Extreme Switches Monitoring Distribution . . . 6–36
6.6.4 Activate the Changes . . . 6–37
6.7 Assign Cabinets in the SC Database . . . 6–37
6.7.1 Load the Physical Relationships . . . 6–38
6.7.2 Populate Cabinets with Nodes . . . 6–39
6.7.3 Populate Cabinets with Other Hardware . . . 6–39
6.8 Review the SC Database Disk Settings . . . 6–40
6.9 Transform Node 0 into a Single Node Domain . . . 6–42
6.10 Run the HP AlphaServer SC Interconnect Tests on Node 0 . . . 6–43

7 Building the Domains

7.1 Understanding the Automated Installation Process 7–1
7.1.1 SC Database Installation Tables 7–2
7.1.2 The sra install Command 7–2
7.1.3 The Installation Daemon 7–2
7.1.4 Installation States 7–3
7.1.5 Monitoring the Installation State 7–4
7.1.5.1 Displaying Information on sra Commands 7–5
7.1.5.2 Querying Node Installation Status 7–5
7.1.5.3 Starting the Monitor Utility 7–5
7.1.5.4 Filtering Views of Installation Progress 7–11
7.1.5.5 Text Based sramon Utility 7–13
7.2 Review the SC Database System Settings 7–14
7.3 Add sysconfigtab Parameters 7–23
7.4 Create the Domains 7–23
7.5 Boot the System 7–25
7.6 Complete the Setup of the Domains 7–25

8 Completing the Installation

8.1 Configure the External Network Interfaces 8–2
8.1.1 Set Up NFS to Allow Mounts from External Machines 8–2
8.2 Improve Cluster Availability 8–3
8.2.1 Cluster Quorum 8–3
8.2.2 Add Votes 8–4
8.2.3 Side Effects of Using Quorum 8–5
8.2.3.1 Shutting Down a Domain 8–6
8.2.3.2 Booting a System 8–6
8.3 Load File System Configuration Data in the SC Database 8–7
8.4 Initial Setup of Monitoring for HSG80 RAID Systems 8–7
8.5 Configure the RMS Database 8–10
8.5.1 Set Up RMS Partitions 8–10
8.5.2 Customize RMS Partitions 8–11
8.6 Provide RMS with CAA Failover Capability 8–11
8.7 Enable CMF as a CAA Application 8–15
8.8 Run the Example MPI Program 8–16
8.9 Verify the HP AlphaServer SC Interconnect 8–17
8.10 Configure LSM 8–18
8.11 Verify Swap Mode 8–18
8.12 Add a Second Rail to an HP AlphaServer SC System after Domain Creation 8–18
8.12.1 HP AlphaServer SC System Composed of HP AlphaServer ES40 Nodes 8–19
8.12.2 HP AlphaServer SC System Composed of HP AlphaServer ES45 Nodes 8–20

9 Installing LSF for HP AlphaServer SC

9.1 LSF Overview . . . 9–2
9.1.1 Preparing for LSF Installation . . . 9–2
9.2 Installing a New LSF for HP AlphaServer SC . . . 9–3
9.2.1 Before You Install . . . 9–3
9.2.2 Installing LSF for HP AlphaServer SC . . . 9–3
9.2.2.1 Example install.config . . . 9–5
9.2.3 Setting up LSF hosts (hostsetup) . . . 9–8
9.2.3.1 What hostsetup does . . . 9–8
9.2.3.2 Running hostsetup . . . 9–9
9.2.4 Next Steps . . . 9–9
9.3 Upgrading from LSF for HP AlphaServer SC Version 2.5 . . . 9–9
9.3.1 Before you Upgrade . . . 9–9
9.3.2 LSF for HP AlphaServer SC Kit . . . 9–10
9.3.3 Running lsfinstall to Upgrade . . . 9–11
9.3.3.1 Using install.config from your existing installation . . . 9–11
9.3.3.2 Setting Up LSF Hosts (hostsetup) . . . 9–12
9.3.3.3 Changing the Syntax of EXTSHED . . . 9–12
9.3.3.4 Migrate any Customized External Executables . . . 9–12
9.3.3.5 Delete the old LSF Installation (optional) . . . 9–13
9.3.4 Next Steps . . . 9–13
9.4 Configuring LSF for HP AlphaServer SC and Starting the LSF . . . 9–13
9.4.1 Configuring the LSF hosts File for Multiple Network Interfaces . . . 9–13
9.4.1.1 Configuring LSF_SERVER_HOSTS . . . 9–15
9.4.1.2 When to Update the Hosts File . . . 9–15
9.4.2 Starting LSF on the SC Cluster . . . 9–15
9.4.3 Verifying that the Configuration is Correct . . . 9–16
9.4.3.1 Sample lsload -l output . . . 9–17
9.4.3.2 Sample bhosts output . . . 9–17

10 Post-Installation Tasks

10.1 State of System Immediately After Installation . . . 10–2
10.2 General Post-Installation Tasks . . . 10–3
10.2.1 Restrict Access to Login Nodes . . . 10–3
10.2.2 Back Up and Restore the Management Server Root (/), /usr, and /var File Systems . . . 10–4
10.2.2.1 Backup the Management Server . . . 10–4
10.2.2.2 Restore the Management Server . . . 10–6
10.2.3 Back Up the Cluster Root (/), /usr, and /var File Systems . . . 10–7
10.3 Console Network . . . 10–9
10.4 Storage and File Systems . . . 10–10
10.5 User Administration . . . 10–11
10.6 Cluster Aliases . . . 10–12
10.7 RMS . . . 10–12

10.7.1 Mandatory RMS Administration Tasks 10–13
10.7.2 Optional RMS Administration Tasks 10–13

11 Troubleshooting

11.1 InstallSC Errors 11–2
11.2 Boot Errors 11–2
11.2.1 RIS Boot Failures 11–3
11.2.2 RIS Boot Reports a Bootstrap Failure 11–4
11.2.3 RIS Boot Failure: Cannot Determine RIS Home Directory 11–4
11.2.4 Failed to RIS Boot a Node When Attempting to Add It to the Cluster 11–5
11.2.5 Cannot Communicate with the CAA Daemon 11–6
11.2.6 New Member Fails to RIS Boot 11–6
11.2.7 New Member Fails After RIS Boot 11–6
11.2.8 RIS: Boot Error 11–7
11.2.9 sra boot Has Timeout Error 11–7
11.2.10 Elan Error During Node Boot 11–8
11.2.11 Error During Node Boot 11–8
11.2.12 Node Hang During RIS Boot 11–9
11.2.13 RIS: File Open Failure for BOOTP 11–9
11.2.14 RIS: Boot Failure Access Violation 11–9
11.3 Adding RIS Client With No Default Route 11–9
11.4 Corrupt .member.list File Causes Core Dumps 11–10
11.5 Adding a New Member Fails 11–11
11.6 sra setup Errors 11–11
11.6.1 The Node is Not at the SRM Prompt 11–11
11.6.2 The Console Logger is Misconfigured 11–12
11.7 Terminal Server Errors 11–12
11.7.1 Terminal Server Configuration Has Changed 11–12
11.7.2 Terminal Server Refuses a Connection 11–12
11.8 rinfo Command Displays UID or Wrong User Name 11–13
11.9 How to Drop and Rebuild the RMS Database 11–14
11.10 rcontrol Reports Errors During Node Boot 11–14
11.11 rcontrol Reports Error When Starting Partitions 11–14
11.12 clu_get_info Prints CONFIGURATION_ERROR 11–15
11.13 How to Powercycle an HP AlphaServer SC System 11–15
11.13.1 Shutting Down 11–15
11.13.2 Powering Off 11–16
11.13.3 Powering On 11–16
11.13.4 Starting Up 11–17
11.14 Error When Installing the Elan Subset on a Management Server 11–17
11.15 Database Access Denied Errors 11–17
11.16 Database Access Denied Error on Some Domains 11–18
11.17 Diagnosing Federated Network Routing Problems 11–19

11.18 Wakeup on LAN (WOL) Problem 11–19
11.19 scfsmgr/pfsmgr report Could Not Open Socket 11–19
11.20 Problem with HSG Devices in Installation Process 11–20
11.21 Upgrade Errors 11–22
11.21.1 Upgrade Setup: RIS Host Appears to Be Invalid 11–22
11.21.2 Problem with dupatch Failure when Upgrading an HP AlphaServer SC System 11–22
11.21.3 Restarting a Failed Upgrade 11–23
11.21.4 Problem with Dependency on First Cluster 11–24
11.21.5 Problems when clu_quorum does not Complete 11–24
11.21.6 Upgrade Backup: node failed with cfs_find_drv_handle panic 11–24
11.21.7 Upgrade Backup: node failed with cfs_issue_localroot_do_mount 11–25
11.21.8 Restoring from Backup Can Sometimes Fail 11–25
11.21.8.1 Incorrect Special Device Number for the Backup Disk 11–25
11.21.8.2 Persistent Reservations in the HSG for the backup disk 11–26
11.22 Increasing the Number of ptys 11–27
11.23 Increasing Socket Listen Queue Limits 11–27

Appendix A Installation Overview and Checklist: When the System Has a Management Server A–1

A.1 Installation Overview A–2

Appendix B Installation Overview and Checklist: When the System Does Not Have a Management Server B–1

B.1 Installation Overview B–2

Appendix C Checklist: Adding a Management Server to a Cluster C–1

C.1 Update SRA C–3
C.2 Disable RIS on Node 0 . . . . . .C–6
C.2.1 Mandatory Tasks. C–6
C.2.2 Optional Tasks C–6
C.3 Stopping the RMS System and mSQL C–7
C.3.1 Manually Starting RMS C–8

Appendix D Information Checklists D–1

Appendix E Example Installation Output E–1

E.1 sra setup E–2
E.2 clu_create E–20
E.3 clu_add_member. E–23
E.4 clu_quorum E–25
E.5 upgrade_check E–27

Appendix F Cluster-Related Messages in System Log Files F–1

F.1 Startup Messages After Creating a Domain F–2
F.2 Startup Messages After Adding a Domain Member. F–9

Appendix G Cluster-Aliases and External Networks in the 10.x.x.x Range G–1

Appendix H Configuring Networker for HP AlphaServer SC H–1

H.1 Domains as a Client of a Corporate Networker Server H–2
H.1.1 Installing the Networker Client Software on the Cluster H–2
H.1.2 Adding Domains as a Client of Corporate Networker Server H–3
H.2 Domains as the Networker Server H–5
H.3 Sample Output H–8

Appendix I Configuring DNS Servers I–1

I.1 Management Server as DNS Server and Cluster as Client. I–2
I.1.1 On the Management Server I–2
I.1.2 On the Cluster. I–3
I.2 Management Server as Master DNS Server and Cluster as Slave DNS Server I–5
I.2.1 On the Management Server I–5
I.2.2 On the Cluster. I–5
I.2.3 Test the Slave DNS Server. I–7
I.3 Other Configurations I–8

Appendix J Configuring MSA1000 . . . . . J–1

J.1 Preparing to Upgrade the MSA1000 Firmware J–2
J.2 Upgrading MSA1000 Firmware J–3
J.3 MSA1000 Sample Configuration J–7

Index

List of Figures

Figure 2–1: Disk Layout in an HP AlphaServer SC Domain 2–8
Figure 2–2: Disk Layout in a DS20L HP AlphaServer SC Domain 2–9
Figure 2–3: Recommended Internal Storage Partitions 2–10
Figure 3–1: Single Management Server 3–2
Figure 3–2: Dual Management Server 3–3
Figure 3–3: HP AlphaServer SC Configuration for a 16-Node System 3–5
Figure 3–4: Node Network Connection When Using an HP AlphaServer SC 16-Port Switch 3–6
Figure 3–5: Node Network Connection When Using an HP AlphaServer SC 128-Port Switch 3–7
Figure 3–6: Node Network Connections: HP AlphaServer SC 16-Port Switch, HP AlphaServer DS20L Nodes 3–8
Figure 3–7: Node Network Connections: HP AlphaServer SC 128-Port Switch, HP AlphaServer DS20L Nodes 3–9
Figure 3–8: Federated HP AlphaServer SC Interconnect Configuration 3–10
Figure 3–9: Example System Storage Configuration — Cabling 3–28
Figure 3–10: Example System Storage Configuration — RAID Storage Units 3–29
Figure 3–11: Block Diagram of Storage System's Connections 3–43
Figure 3–14: Example System Storage Configuration — MSA1000 3–60
Figure 5–1: Tru64 UNIX Custom Setup Menu 5–10
Figure 5–2: Tru64 UNIX Network Setup Wizard Menu 5–14
Figure 6–1: Tru64 UNIX Custom Setup Menu 6–8
Figure 6–2: Tru64 UNIX Network Setup Wizard Menu 6–12
Figure 7–1: Status of Commands and Nodes 7–6
Figure 7–2: Log Menu Items 7–8
Figure 7–3: Sample Log File 7–9
Figure 7–4: Console Menu Items 7–10
Figure 7–5: Console File Details 7–10
Figure 7–6: Filtering Options Based on Status 7–11
Figure 7–7: Display Options Based on Nodes 7–12

List of Tables

Table 0–1: Abbreviations xxv
Table 0–2: Documentation Conventions xxvii
Table 0–3: HP-Specific Names and Part Numbers for Quadrics Components xxviii
Table 0–4: Network Adapters and Device Names xxix
Table 1–1: HP AlphaServer SC Subset Contents 1–4
Table 1–2: HP AlphaServer SC Disk Space Requirements 1–5
Table 2–1: HP AlphaServer SC IP Addresses 2–5
Table 2–2: Domain Naming Scheme 2–6
Table 2–3: Example (Not Default) Local Storage Layout 2–11
Table 3–1: How to Connect the Components of an HP AlphaServer SC System 3–4
Table 3–2: Populating the HP AlphaServer ES40 PCI Slots 3–17
Table 3–3: Populating the HP AlphaServer ES45 PCI Slots 3–18
Table 3–4: Populating the HP AlphaServer DS20L PCI Slots 3–20
Table 3–5: Minimum System Driver and Firmware Versions 3–23
Table 3–6: Identifying the WWN of the HBAs — HSG80 3–31
Table 3–7: Identifying the Connections from the HSG80 Controllers to atlas0 3–32
Table 3–8: Renaming the Connections — HSG80 3–33
Table 3–9: Creating the Mirrorsets 3–35
Table 3–10: Initializing the Storagesets — HSG80 3–36
Table 3–11: Introducing the Storage Units (Virtual Disks) — HSG80 3–37
Table 3–12: Setting the Identifiers — HSG80 3–37
Table 3–13: Disabling Access to the Units 3–38
Table 3–14: Enabling Access to the Units for Connected Nodes — HSG80 3–39
Table 3–15: Allocating RAID Storagesets 3–41
Table 3–16: Storage Requirements for a Single HP AlphaServer SC domain 3–46
Table 3–17: Storage Requirement for the Management Cluster 3–47
Table 3–18: SC45 Minimal Storage Requirements 3–47
Table 3–19: SC20 Minimal Storage Requirements 3–47
Table 3–20: Disk Group Virtual RAID1 Available Space per Number of Disks 3–48
Table 3–21: Summary Allocation of Disks on the HSV110 3–48
Table 3–22: WW Node and Port Names 3–53
Table 3–23: Introducing the Storage Units (Virtual Disks) — MSA1000 3–62
Table 3–24: Setting the Identifiers — MSA1000 3–62
Table 3–25: Identifying the WWN of the HBAs — MSA1000 3–63
Table 3–26: Identifying the WWN of the HBAs — MSA1000 — Management Server 3–64
Table 3–27: Renaming the Connections — MSA1000 3–65
Table 3–28: Enabling Access to the Units for Connected Nodes — MSA1000 3–66
Table 4–1: Upgrade States 4–4

Table 4–2: Upgrade Time Estimates 4–7
Table 5–1: Setting the Console Variables 5–3
Table 5–2: Minimum System Firmware Versions 5–4
Table 5–3: Recommended Partition Layout for Management Server System Disk 5–8
Table 5–4: Minimum Kernel Options 5–9
Table 5–5: Network Interface Cards on a Management Server 5–15
Table 5–6: Routing Services 5–15
Table 5–7: Hosts File When Configuring a Management Server 5–16
Table 5–8: Configuration of New Member Network Interfaces 5–30
Table 5–9: Recommended Boot Disk Partition Configuration 5–40
Table 5–10: SRM Console Variables 5–42
Table 5–11: Minimum System Firmware Versions 5–45
Table 6–1: Setting the Console Variables 6–3
Table 6–2: Minimum System Firmware Versions 6–4
Table 6–3: Recommended Partition Layout for Node 0 System Disk 6–6
Table 6–4: Minimum Kernel Options 6–7
Table 6–5: Network Interface Cards on Node 0 6–12
Table 6–6: Routing Services 6–13
Table 6–7: Hosts File When Configuring Node 0 6–13
Table 6–8: Recommended Boot Disk Partition Configuration 6–27
Table 6–9: SRM Console Variables 6–29
Table 6–10: Minimum System Firmware Versions 6–32
Table 7–1: Installation States 7–3
Table 7–2: Status of Commands and Nodes Menu Items 7–6
Table 7–3: Status of Commands and Nodes Window 7–7
Table 9–1: Required install.config Variables 9–4
Table 9–2: Variables that Require an Absolute Path 9–4
Table 11–1: Full Upgrade States 11–23
Table 11–2: Manually Adjusting ptys 11–27
Table A–1: Installation Process: When the System Has a Management Server A–2
Table B–1: Installation Process: When the System Does Not Have a Management Server B–2
Table C–1: Installation Checklist C–1
Table D–1: Summit Switch and Terminal Server Port Numbers D–1
Table D–2: Tru64 UNIX System Attributes D–1
Table D–3: Domain Attributes D–2
Table D–4: Member Attributes of Domain D0 . . . . . D–3
Table D–5: Member Attributes of Domain D1 . . . . . D–4
Table D–6: Member Attributes of Domain D2 . . . . . D–5
Table D–7: Member Attributes of Domain D32 . . . . . D–6
Table E–1: Upgrade Check Output E–27
Table G–1: Alternative HP AlphaServer SC IP Addresses G–1

Preface

Purpose of this Guide

This document describes how to install a AlphaServer SC system from the Hewlett-Packard Company ("HP").

Intended Audience

This document is for those who install and set up HP AlphaServer SC systems. Some sections will be helpful to end-users. Before starting any installation, you must:

- Read the current version of the *HP AlphaServer SC Release Notes*, particularly all sections relating to installation.
- Understand how to load and unload the installation media and know which disks are needed during the installation.
- Have a basic understanding of the file system and commands.

New and Changed Features

This section describes the changes in HP AlphaServer SC since Version 2.5.

New Information

This document contains the following new information:

- Chapter 3: Physical Installation
- Chapter 4: Upgrade Installation Procedure
- Appendix J: Configuring MSA1000

Changed Information

The following chapters were revised to document changed features:

- Chapter 1: Installation Overview

- Chapter 2: Pre-Installation Planning
- Chapter 3: Physical Installation
- Chapter 4: Upgrade Installation Procedure
- Chapter 5: Installing: When the System Has a Management Server
- Chapter 6: Installing: When the System Does Not Have a Management Server
- Chapter 7: Building the Domains
- Chapter 8: Completing the Installation
- Chapter 9: Installing LSF for HP AlphaServer SC
- Chapter 10: Post-Installation Tasks
- Chapter 11: Troubleshooting
- Appendix A: Installation Overview and Checklist: When the System Has a Management Server
- Appendix B: Installation Overview and Checklist: When the System Does Not Have a Management Server
- Appendix C: Checklist: Adding a Management Server to a Cluster
- Appendix D: Information Checklists
- Appendix E: Example Installation Output
- Appendix F: Cluster-Related Messages in System Log Files
- Appendix G: Cluster-Aliases and External Networks in the 10.x.x.x Range
- Appendix I: Configuring DNS Servers

Structure of This Guide

This document is organized as follows:

- Chapter 1: Installation Overview
- Chapter 2: Pre-Installation Planning
- Chapter 3: Physical Installation
- Chapter 4: Upgrade Installation Procedure
- Chapter 5: Installing: When the System Has a Management Server
- Chapter 6: Installing: When the System Does Not Have a Management Server
- Chapter 7: Building the Domains
- Chapter 8: Completing the Installation

- Chapter 9: Installing LSF for HP AlphaServer SC
- Chapter 10: Post-Installation Tasks
- Chapter 11: Troubleshooting
- Appendix A: Installation Overview and Checklist: When the System Has a Management Server
- Appendix B: Installation Overview and Checklist: When the System Does Not Have a Management Server
- Appendix C: Checklist: Adding a Management Server to a Cluster
- Appendix D: Information Checklists
- Appendix E: Example Installation Output
- Appendix F: Cluster-Related Messages in System Log Files
- Appendix G: Cluster-Aliases and External Networks in the 10.x.x.x Range
- Appendix H: Configuring Networker for HP AlphaServer SC
- Appendix I: Configuring DNS Servers
- Appendix J: Configuring MSA1000

Terms Used in This Guide

Clusters of nodes within an HP AlphaServer SC system are called domains (except in the case of clustered management servers). However, as domain management in HP AlphaServer SC systems is based on cluster management in TruCluster Server, many of the terms used in domain management include the word “cluster” — for example, cluster alias, cluster quorum, cluster application availability (CAA), cluster root, cluster disk.

The term “LSF cluster” is used to describe a group of machines controlled by LSF. An LSF cluster can consist of one or more HP AlphaServer SC systems, or part of an HP AlphaServer SC; it can also include additional machines of arbitrary architectures.

TruCluster Server Documentation

The HP TruCluster Server documentation set provides a wealth of information about clusters and cluster management; however, there are a number of differences between the management of domains in an HP AlphaServer SC system, and the management of TruCluster Server clusters. These differences are described in the *HP AlphaServer SC System Administration Guide*.

You should use the HP TruCluster Server documentation set to supplement the HP AlphaServer SC documentation set — if there is a conflict of information, use the instructions provided in the HP AlphaServer SC documentation set.

Related Documentation

You should have a hard copy or soft copy of the following documents:

- *HP AlphaServer SC Release Notes*
- *HP AlphaServer SC System Administration Guide*
- *HP AlphaServer ES40 Owner's Guide*
- *HP AlphaServer ES45 Owner's Guide*
- *HP AlphaServer DS20L*
- *HP StorageWorks HSG80 Array Controller CLI Reference Guide*
- *HP StorageWorks HSG80 Array Controller Configuration Guide*
- *HP StorageWorks Fibre Channel Storage Switch User's Guide*
- *TruCluster Server Technical Overview*
- *TruCluster Server Hardware Configuration*
- *TruCluster Server Release Notes*
- *TruCluster Server Cluster Installation*
- *HP Tru64 UNIX Installation Guide*
- *HP Tru64 UNIX Network Administration*
- *HP Tru64 UNIX System Administration*
- *HP Tru64 UNIX Software License Management*
- *HP Tru64 UNIX System Configuration and Tuning*
- *HP AlphaServer SC User Guide*
- *HP AlphaServer SC RMS Reference Manual*
- *HP AlphaServer SC Interconnect Installation and Diagnostics Manual*
- *HP AlphaServer SC Platform LSF® Reference*
- *Administering HP AlphaServer SC Platform LSF®*
- *HP AlphaServer SC Platform LSF® Reference*
- *Running Jobs with HP AlphaServer SC Platform LSF®*
- *Summit Hardware Installation Guide*, Extreme Networks, Inc.
- *ExtremeWare Software User Guide*, Extreme Networks, Inc.

Abbreviations

Table 0–1 lists the abbreviations that are used in this document.

Table 0–1 Abbreviations

Abbreviation	Description
AdvFS	Advanced File System
ATM	Asynchronous Transfer Mode
AUI	Attachment Unit Interface
BIND	Berkeley Internet Name Domain
CD-ROM	Compact Disc — Read-Only Memory
CDSL	Context-Dependent Symbolic Link
CFS	Cluster File System
CPU	Central Processing Unit
DNS	Domain Name Service
FastFD	Fast, Full Duplex
FC	Fibre Channel
FDDI	Fiber-optic Digital Data Interface
GBIC	Gigabit Interface Connector
HiPPI	High-Performance Parallel Interface
IP	Internet Protocol
JBOD	Just a Bunch Of Disks
LIM	Load Information Manager
LSF	Load Sharing Facility
LSM	Logical Storage Manager
MAU	Multiple Access Unit
MPI	Message Passing Interface
NFS	Network File System
NIS	Network Information Service

Table 0–1 Abbreviations

Abbreviation	Description
NTP	Network Time Protocol
PAK	Product Authorization Key
PCMCIA	Personal Computer Memory Card International Association
PFS	Parallel File System
RAID	Redundant Array of Independent Disks
RIS	Remote Installation Services
RMS	Resource Management System
SC	SuperComputer
SCSI	Small Computer System Interface
SMP	Symmetric Multiprocessing
UTP	Unshielded Twisted Pair
WOL	Wakeup On LAN
WWID	WorldWide Identification

Documentation Conventions

Table 0–2 lists the documentation conventions that are used in this document.

Table 0–2 Documentation Conventions

Convention	Description
atlas	atlas is an example system name.
%	A percent sign represents the C shell system prompt.
$	A dollar sign represents the system prompt for the Bourne and Korn shells.
#	A number sign represents the superuser prompt.
P00>>>	A P00>>> sign represents the SRM console prompt.
`Monospace type`	Monospace type indicates file names, commands, system output, and user input.
Boldface type	Boldface type indicates the first occurrence of a special term, or a complete sentence of important information. Boldface type in interactive examples indicates typed user input.
Italic type	Italic (slanted) type indicates emphasis, variable values, placeholders, menu options, function argument names, menu options, HP trademarks, and complete titles of documents and CD-ROMs.
Underlined type	Underlined type emphasizes important information.
[|] {|}	In syntax definitions, brackets indicate items that are optional and braces indicate items that are required. Vertical bars separating items inside brackets or braces indicate that you choose one item from among those listed.
...	In syntax definitions, a horizontal ellipsis indicates that the preceding item can be repeated one or more times.
⋮	A vertical ellipsis indicates that a portion of an example that would normally be present is not shown.
cat(1)	A cross-reference to a reference page includes the appropriate section number in parentheses. For example, `cat(1)` indicates that you can find information on the `cat` command in Section 1 of the reference pages.
Ctrl/x	This symbol indicates that you hold down the first named key while pressing the key or mouse button that follows the slash.
Note	A note contains information that is of special importance to the reader.

HP-Specific Names and Part Numbers for Quadrics Components

Several HP AlphaServer SC Interconnect components are created by Quadrics. HP documents refer to Quadrics components using HP-specific names. Several Quadrics components also have a (different) Quadrics name. Table 0–3 shows how the HP-specific names and part numbers map to the equivalent Quadrics names.

Table 0–3 HP-Specific Names and Part Numbers for Quadrics Components

HP Part#	HP Name	Quadrics Name
3X-CCNBA-AA	HP AlphaServer SC 16-Port Switch	QM-S16
3X-CCNXA-BA	HP AlphaServer SC 128-Way Switch (new-type)	QM-S128F[1]
3X-CCNXE-CA	HP AlphaServer SC Top-Level Switch	QM-S128F[1]
3X-CCNXA-CA	HP AlphaServer SC Node-Level Switch	QM-S128F[1]
3X-CCNXA-AA	HP AlphaServer SC 128-Way Switch (old-type)	QM-S128
3X-CCNNA-AA	HP AlphaServer SC Elan Adapter Card	QM-400
3X-CCNXF-BA	HP AlphaServer SC 16-Port Switch Card (new-type)	QM-401X[2]
3X-CCNXF-AA	HP AlphaServer SC 16-Port Switch Card (old-type)	QM-401X[2]
3X-CCNXR-AA	HP AlphaServer SC High-Level Switch Card	QM-402
3X-CCNCR-BA	HP AlphaServer SC Clock Card (new-type)	QM-408
3X-CCNCR-AA	HP AlphaServer SC Clock Card (old-type)	QM-403
3X-CCNXN-AA	HP AlphaServer SC 16-Link Null Card	QM-407
3X-CCNXP-AA	HP AlphaServer SC Interconnect Control Processor	QM-410

[1]The Quadrics part number QM-S128F corresponds to several components. The Quadrics part number refers to the basic empty chassis. Use the HP part numbers to distinguish between the different ways in which the chassis may be populated.

[2]The Quadrics part number QM-401X was not updated when this component was updated. Use the HP part numbers to distinguish between the new-type and old-type versions of this component.

Supported Network Adapters

Table 0–4 lists the associated device names for each supported network adapter. The examples in this guide refer to the DE602 network adapter.

Table 0–4 Network Adapters and Device Names

Network Adapter	SRM Device Name	UNIX Device Name
DE60*x*	`eia0`	`ee0`
DE50*x*	`ewa0`	`tu0`
Gigabit Ethernet	SRM cannot use this device	`alt0`
Gigabit Ethernet	SRM cannot use this device	`bcm0`
HiPPI[1, 2]	SRM cannot use this device	`hip0`
ATM[2]	SRM cannot use this device	`lis0`
FDDI	SRM cannot use this device	`fta0`

[1]HiPPI is only available if you install an additional HiPPI subset — for Tru64 UNIX Version 5.1B, the minimum supported version is HiPPI kit 222.

[2]The `sra install` command does not configure HiPPI and ATM interfaces — you must configure such interfaces manually.

Supported Node Types

HP AlphaServer SC Version 2.6 supports the following node types:

- HP AlphaServer ES45
- HP AlphaServer ES40
- HP AlphaServer DS20L

Multiple Domains

The example system described in this document is a 1024-node system, with 32 nodes in each of 32 domains. Therefore, the first node in each domain is Node 0, Node 32, Node 64, Node 96, and so on. If you wish to set up a different configuration, substitute the appropriate node name(s) for Node 32, Node 64, and Node 96 in this manual.

For information about the domain types supported in HP AlphaServer SC Version 2.6, see Chapter 1 of the *HP AlphaServer SC System Administration Guide*.

Note:

HP AlphaServer SC Version 2.6 supports large systems with up to 128 domains. For example, a 4096-node system may have 32 nodes in each of 128 domains. In this case, the domains are `D0` to `D127`, and the naming convention used is as follows: `atlasD0`, `atlasD1` and so on.

For information about the domain types supported in HP AlphaServer SC Version 2.6, see Section 2.3.2 on page 2–4.

Location of Code Examples

Code examples are located in the `/Examples` directory of the *HP AlphaServer SC System Software* CD-ROM.

Location of Online Documentation

Online documentation is located in the `/docs` directory of the *HP AlphaServer SC System Software* CD-ROM.

Comments on this Document

HP welcomes any comments and suggestions that you have on this document. Please send all comments and suggestions to your HP Customer Support representative.

1
Installation Overview

This manual describes how to install and configure an HP AlphaServer SC system. Before you begin the installation, please read this manual. Becoming familiar with the general sequence of installation steps can save time and prevent later problems.

Note:

The procedures in this manual assume that each system's hardware and firmware are installed and configured as described in the following manuals:

- *HP AlphaServer ES40 Owner's Guide*, *HP AlphaServer ES45 Owner's Guide*, *HP AlphaServer DS20L Owner's Guide*
- *Summit Hardware Installation Guide*
- *HP AlphaServer SC Interconnect Installation and Diagnostics Manual*

Do not begin the software installation until the hardware is installed and configured.

Read the *HP AlphaServer SC Release Notes* before installing the HP AlphaServer SC software. You should also read the *HP TruCluster Server Technical Overview* to become familiar with the HP AlphaServer SC architecture and terminology. Chapter 1 of the *HP AlphaServer SC System Administration Guide* describes the main components of an HP AlphaServer SC system.

This chapter provides the following information:

- Installation Overview (see Section 1.1 on page 1–2)
- License Requirements (see Section 1.2 on page 1–3)
- HP AlphaServer SC Subsets (see Section 1.3 on page 1–4)
- Base System Subsets (see Section 1.4 on page 1–6)
- General Considerations (see Section 1.5 on page 1–7)

1.1 Installation Overview

The software installation process involves the following steps:

1. Plan the installation, and ask the site network administrator for the required IP information.

   This process is described in Chapter 2 (*Pre-Installation Planning*).

2. If you are upgrading from an earlier release, plan the upgrade.

   This process is described in Chapter 4 (*Upgrade Installation Procedure*).

3. Install and configure the software, and set up the domains, as follows:
   a. Manually install and configure the Tru64 UNIX operating system software — on either the management server or Node 0.[1]
   b. Manually install and configure the HP AlphaServer SC system software — on either the management server or Node 0.[1]
   c. Configure either the management server or Node 0[1] as a Remote Installation Services (RIS) server for the system, using the `ris` command.
   d. Set up the SC database — on either the management server or Node 0[1] — using the `sra setup` command.
   e. Check the state of all of the other nodes in the HP AlphaServer SC system, by running commands (`sra diag`, `sra command`, `sra ethercheck`, and `sra elancheck`) on either the management server or Node 0[1].
   f. Install and configure the software on the system, by running the `sra install` command to create a fully installed domain. The `sra install` command automates the following steps:
      – RIS-boots the specified nodes from the RIS server (see step c. above)
      – Installs and configures the Tru64 UNIX operating system software and the HP AlphaServer SC system software on these nodes.
      – Copies the license database (including TruCluster and ASC licences) to the first node of each domain.
      – Transforms each specified single-node system into a single-node domain.
      – Adds new members to the domains.
      – Performs additional configuration tasks on the specified nodes.

      This process is described in Chapter 7.

1. Perform this task on the management server, if used. If not using a management server, perform this task on Node 0.

4. Perform the final installation tasks: configure the external network interfaces, improve domain availability by adding votes, configure the RMS database on Node 0 or on the management server if used, create the RMS partitions. Then run the example MPI program.

   This process is described in Chapter 8 (*Completing the Installation*).

Once hardware setup is complete, it typically takes up to two working days to install HP AlphaServer SC System Software Version 2.6 on a 1024-node system. A detailed overview of the complete installation process is provided in the following appendixes:

- Appendix A (*Installation Overview and Checklist: When the System Has a Management Server*)
- Appendix B (*Installation Overview and Checklist: When the System Does Not Have a Management Server*)

Each of these appendixes also provides an installation checklist to help you to complete all of the installation tasks in the correct order.

1.2 License Requirements

There are no system-wide licenses. Each HP AlphaServer SC member must have its own licenses installed. For the first member, after installing and licensing Tru64 UNIX, load and register an HP AlphaServer SC license and TruCluster license (TCS-UA) to create a single-member cluster.

Each time you add an additional member to the HP AlphaServer SC system, the entire license database (including the TCS-UA and ASC licenses) is propagated from the first member of the domain (Node 0, 32, 64 and so on) to the new member.

Note:

The `sra install` command propagates the license database.

After domain creation, any additional required application licenses must be registered on each member that will run the application.

Note:

You can boot a system that does not have an HP AlphaServer SC license. The system joins the domain and boots to multiuser mode, but only the `root` user can log in (with a maximum of two users).

The system displays a license error message reminding you to load the license. This policy enforces license checks while making it possible to boot, license, and repair a system during an emergency.

For more information about registering licenses, see Section 5.1.5.1 on page 5–10 or Section 6.1.4.1 on page 6–8, and the *Tru64 UNIX Software License Management* manual.

1.3 HP AlphaServer SC Subsets

In addition to the operating system software (that is, Tru64 UNIX), several HP AlphaServer SC subsets are installed. Table 1–1 lists the HP AlphaServer SC subsets installed by the HP AlphaServer SC installation tools.

Table 1–1 HP AlphaServer SC Subset Contents

Subset Name	Description
SRAOSFPATCH300 SRATCRBASE300	HP AlphaServer SC patch software for Tru64 UNIX software HP AlphaServer SC patch software for TruCluster Server software
ELNMOD340	HP AlphaServer SC Interconnect software
JTGMOD300	JTAG Switch Management software
SRABASE300 SRATCL300	HP AlphaServer SC Installation Utility (SRA) software
SRAGXEXEC300	HP AlphaServer SC Global Execution
SRACFENGINE300	HP AlphaServer SC cfengine
SRAUPG300	HP AlphaServer SC upgrade software
TCRBASE540 TCRMAN540 TCRMIGRATE540	TruCluster Server software
SRASYSMAN300	HP AlphaServer SC Sysman software
SCFSBASE300 SCFSBIN300	HP AlphaServer SC File System (SCFS) software
QSWNETDIAGS340	HP AlphaServer SC Interconnect diagnostic software
SRAMPI300	HP AlphaServer SC Message Passing Interface (MPI) software
PPMBASE300	Performance Visualizer performance monitoring software

Table 1–1 HP AlphaServer SC Subset Contents

Subset Name	Description
RMSBASE300 RMSD300 RMSELAN300 RMSLSFSUP300 RMSMAN300 RMSPANDORA300	HP AlphaServer SC Resource Management System (RMS) software
SWMSUP120	HP AlphaServer SC Interconnect Controller Switch Management software
PFSMOD300	HP AlphaServer SC Parallel File System (PFS) software
MSQLSUP340	HP AlphaServer SC mSQL Support

Table 1–2 shows the approximate disk space requirements for each HP AlphaServer SC subset in the root (`/`), `/usr`, and `/var` file systems on the Tru64 UNIX system.

Table 1–2 HP AlphaServer SC Disk Space Requirements

Subset Name	Root File System (bytes)	/usr File System (bytes)	/var File System (bytes)	Total (bytes and MB)
SRAOSFPATCH300	67 918	0	0	67 918
SRATCRBASE300	194 537	831 173	0	1 025 710
ELNMOD340	0	3 095 769	0	3 095 769
JTGMOD300	0	372 648	0	372 648
SRABASE300	40 120	3 631 731	41 132	3 712 983
SRATCL300	0	3 745 906	0	3 745 906
SRAGXEXEC300	369	10 410 362	8 192	10 418923
SRACFENGINE300	16 929	2 098 775	88 708	2 204 412
SRAUPG300	8 192	452 166	0	460 358
TCRBASE540	613 261	52 224 811	10 310 776	63 148 848
TCRMAN540	0	882 353	0	882 353
TCRMIGRATE540	0	1 069 348	0	1 069 348
SRASYSMAN300	31 030	4 926 406	61 795	5 019 231
SCFSBASE300	0	53 558	0	53 558
SCFSBIN300	26 934	1 595 245	0	1 622 179
QSWNETDIAGS340	0	5 422 376	0	5 422 376

Table 1–2 HP AlphaServer SC Disk Space Requirements

Subset Name	Root File System (bytes)	/usr File System (bytes)	/var File System (bytes)	Total (bytes and MB)
SRAMPI300	0	58 479 084	0	58 479 084
PPMBASE300	0	2 593 288	0	2 593 288
RMSBASE300	0	10 077 674	41 311	10 118 985
RMSD300	23 744	21 478 373	0	21 502 117
RMSELAN300	396 377	15 468 002	0	15 864 379
RMSLSFSUP300	0	914 372	0	914 372
RMSMAN300	0	540 150	0	540 150
RMSPANDORA300	0	4 334 055	0	4 334 055
SWMSUP120	1 990 800	5 091 388	0	7 082 188
PFSMOD300	537 394	1 214 495	0	1 751 889
MSQLSUP340	27 561	1 774 258	42 062	1 843 881

1.4 Base System Subsets

When you install Tru64 UNIX, you must select AdvFS as the file system type for the root (`/`), `/usr`, and `/var` file systems.

If your HP AlphaServer SC system will contain different types of file systems, make sure to load the optional Tru64 UNIX subsets needed to support different hardware configurations. For example, because keyboards and graphics cards require specific subsets in order to work properly, load all keyboard and font subsets.

Regardless of the types of file systems in the HP AlphaServer SC system, it is strongly recommended that, unless prohibited by site policy, you load all subsets from the base operating system media when installing the Tru64 UNIX system.

You might add different file systems at a later date, or you might install an application that has a dependency on a subset you did not install. You can add additional software subsets later, but, because you are dealing with only one system, it is easier to install them before you create a cluster.

Note:

If you are installing subsets from the Associated Product CD-ROMs, please do not install the TruCluster software contained, as HP AlphaServer SC uses its own version of the TruCluster software.

1.5 General Considerations

Note the following general installation considerations:

- If you build your own kernels, be aware that in an HP AlphaServer SC system, `/vmunix` is a context-dependent symbolic link (CDSL):
  `/vmunix -> cluster/members/{memb}/boot_partition/vmunix`

  Treat a CDSL as you would any other symbolic link: remember that copying a file follows the link, but moving a file replaces the link. If you were to move (instead of copy) a kernel to `/vmunix`, you would replace the symbolic link with the actual file.

  The *HP TruCluster Server Technical Overview* describes CDSLs; Chapter 24 of the *HP AlphaServer SC System Administration Guide* provides information on using and repairing CDSLs.
- You must have at least 512MB of memory available on each member system.
- HP AlphaServer SC supports the UNIX File System (UFS) as a read-only file system only.

2
Pre-Installation Planning

This chapter describes the activities that you should perform when planning the installation.

Note:

Use the checklist provided in Appendix A (if using a management server) or Appendix B (if not using a management server), to ensure that you complete all installation tasks in the correct order.

If adding a management server to an HP AlphaServer SC system after domain creation, use the checklist provided in Appendix C to ensure that you complete all installation tasks in the correct order.

The information in this chapter is structured as follows:

- Review the Release Notes (see Section 2.1 on page 2–2)
- Assign the External Network IP Addresses (see Section 2.2 on page 2–2)
- Assign the System Name and Default Cluster Aliases (see Section 2.3 on page 2–2)
- Plan the Local and Global Storage (see Section 2.4 on page 2–7)
- Choose the Root Password (see Section 2.5 on page 2–17)
- Record the External Gateway IP Address (see Section 2.6 on page 2–17)

2.1 Review the Release Notes

Please review the Release Notes for Tru64 UNIX Version 5.1B and those for HP AlphaServer SC Version 2.6. These documents are located as follows:

- *Tru64 UNIX Version 5.1B Release Notes* are located on the *HP Tru64 UNIX Version 5.1B Documentation* CD-ROM. This document describes significant new and changed features in Version 5.1B of the Tru64 UNIX operating system, and lists features and interfaces scheduled for retirement in future releases.
- *HP AlphaServer SC Version 2.6 Release Notes* are located in the `/docs` directory on the *HP AlphaServer SC System Software* CD-ROM. This document provides information on restrictions to the software and documentation for HP AlphaServer SC system software.

2.2 Assign the External Network IP Addresses

The process to assign the external network IP addresses is performed when you run the `sra setup` command as described in Section 5.2 and Section 6.2. The `sra setup` command automatically allocates an IP address and subnet mask to each external network interface — you must have at least two external network interfaces on each domain (one on the first two nodes of each domain: Nodes 0 and 1; Nodes 32 and 33; Nodes 64 and 65 and so on), and one on the management server (if used).

A typical scheme uses a base IP address for the external interface for node 0, and increments this IP address by 1 for the external interface to node 1, node 32, node 33, and so on. It also uses a different base IP address for the cluster alias for domain 0, and increments this IP address by 1 for each subsequent cluster alias. If you wish to follow this scheme, `sra setup` will be able to automatically enter the IP addresses in the database, based on the base IP addresses that you enter. Otherwise, `sra setup` will have to prompt you for each external node IP address and each cluster alias IP address in the system.

Ask your site network administrator for this information, and record it in Appendix D.

Note:

Use the checklist provided in Appendix D to record all site-specific information.

2.3 Assign the System Name and Default Cluster Aliases

When planning the system name, consider the future size of your system, as described in Section 2.3.1 on page 2–3.

The names of the default cluster aliases are derived from the system name. However, you must plan other attributes of the default cluster aliases, as described in Section 2.3.2 on page 2–4 and Section 2.3.3 on page 2–4.

The system name is the only name that you need to choose — all other names are then derived from the system name, as shown in Table 2–2 on page 2–6.

Note:

The system name, and the names of the default cluster aliases, must not end with a digit. The system name must not contain dashes or other forms of punctuation.

2.3.1 System Name

The system name shall consist of letters and numbers only and it should not end in a number.

The HP AlphaServer SC installation process uses the system name to derive both the cluster alias names and the host names of each member in each domain.

For example, in a 64-node system with system name `atlas`, the cluster aliases will be `atlasD0` and `atlasD1` while the node host names will be `atlas0`, `atlas1`, ..., `atlas63`.

If you prefer the cluster alias naming convention used in previous releases, you can select this option during the installation process.

However, if the number of nodes is less than or equal to 32, and therefore you choose to have only one domain, then the cluster alias name will be the same as the system name — in the above example, the cluster alias name would be `atlas`. If you later increase the number of nodes to 33 or more, you create a second domain (`atlasD1`), and rename the original cluster alias (from `atlas` to `atlasD0`).

If your system currently has 32 nodes or less but you plan to have 33 nodes or more, enter the proposed total number of nodes when prompted by the `sra setup` command (see either Section 5.2 on page 5–36 or Section 6.2 on page 6–24). This will create the required number of domains with the correct naming convention. Record the system name in Appendix D.

If the system has a management server, then the name is free format. However, it is advisable to derive a management server name from the system name, for example `atlasms`.

For systems with clustered management servers, it is advised that the names of the individual management server nodes are of the format `atlasms0` and `atlasms1`, and the management server cluster alias is `atlasms`. The alias is then the name of the management server as defined in the `sra setup` dialog.

2.3.2 Domain Types

In HP AlphaServer SC Version 2.6, there are two domain types:

- File-Serving (FS) domain
- Compute-Serving (CS) domain

HP AlphaServer SC Version 2.6 supports a maximum of four FS domains.

The FS domains can be any domain. It is not mandatory to create an FS domain, but you will not be able to use SCFS if you have not done so. For more information about SCFS, see Chapter 7 of the *HP AlphaServer SC System Administration Guide*.

If you choose to have a small FS domain to maximize the number of nodes in the remaining CS domains, you should avoid gaps in the numbering sequence. The first node in the first CS domain should start directly after the last node in the FS domain. From a cabling perspective, the ports used on the HP AlphaServer SC Interconnect switch should also be contiguous.

If you intend to add more nodes to the FS domain later, it is acceptable to leave gaps in the numbering sequence. In such cases, you must leave corresponding gaps in the cabling sequence. You must also ensure that the total node count set in the SC database reflects the final node count; that is, that it includes those nodes not yet added.

2.3.3 Default Cluster Aliases

The **default cluster alias** is a name, with an associated IP address, that makes all of the systems in a domain look like a single system to the outside world. Depending on the number of nodes in your HP AlphaServer SC system, you need up to 32 default cluster aliases — that is, one for each domain. The default cluster alias is assigned during cluster installation, and all members of the domain automatically join the default cluster alias at boot time.

You must plan the following attributes of each default cluster alias:

- Name (the domain name) — the default value is derived from the system name (see Table 2–2 on page 2–6)

  HP recommends that you accept the default values for the domain names. The default names are derived by appending the letter D and an incrementing number to the system name. For example, if the system name is `atlas`, assign the following names to the domains: `atlasD0, atlasD1,` and so on (see Section 5.2 on page 5–36 or Section 6.2 on page 6–24).
- IP address — note that the cluster alias IP address should not be a `10` address, however, if a `10` address is required, refer to Appendix G.
- Subnet mask

Note:

The domain naming scheme (`atlasA`, `atlasB`) used in earlier HP AlphaServer SC releases is still supported in HP AlphaServer SC Version 2.6.

Ask your site network administrator for this information, and record it in Appendix D.

Table 2–1 lists the convention used to assign IP addresses in an HP AlphaServer SC system. Table 2–2 on page 2–6 shows the domain naming scheme.

Table 2–1 HP AlphaServer SC IP Addresses

Component	IP Address Range
Net mask	`255.255.0.0`
Cluster Interconnect (IP suffix: `-ics0`)	`10.0.`*`x.y`*
System Interconnect (IP suffix: `-eip0`)	`10.64.`*`x.y`*
Management network interface card	`10.128.`*`x.y`*
Terminal server *t*, where *t* is 1–254	`10.128.100.`*`t`*
Management server *m* on management LAN, where *m* is 1, or 2 for the second member of a clustered management server	`10.128.101.`*`m`*
Management server *m* Cluster Interconnect (IP suffix: `-ics0`)	`10.32.0.`*`m`*
Management server Gigabit Interconnect (IP suffix: `-icstcp0`)	`10.33.0.`*`m`*
Summit switch *g*, where *g* is 1–11	`10.128.103.`*`g`*
HP SANworks Management Appliance or Fibre Channel switch *f*, where *f* is 1–254	`10.128.104.`*`f`*
RAID array controller *a*, where *a* is 1, 2, and so on	`10.128.105.`*`a`*
HP AlphaServer SC Interconnect Control Card for Node-Level switch *N*, where *r* is the rail number and *N* is 0–31	`10.128.(128+`*`r`*`).(`*`N`*`+1)`
HP AlphaServer SC Interconnect Control Card for Top-Level switch *T*, where *r* is the rail number and *T* is 0–15	`10.128.(128+`*`r`*`).(`*`T`*`+128)`
Preferred server cluster alias addresses (where *FS* is 0-3, thus accommodating a maximum of four FS domains, and *y* is the member ID within the FS domain)	`10.128.(106+`*`FS`*`).`*`y`*

Table 2–2 Domain Naming Scheme

Element	First Domain Name	First Domain IP Address	Second Domain Name	Second Domain IP Address
Default Cluster Alias (domain name)	atlasD0	site-dependent	atlasD1	site-dependent
Nodes (node names on management network)	atlas0, atlas1, ..., atlas31	10.128.0.1, 10.128.0.2, ..., 10.128.0.32	atlas32, atlas33, ..., atlas63	10.128.0.33, 10.128.0.34, ..., 10.128.0.64
Cluster Interconnect	atlas0-ics0, ..., atlas31-ics0	10.0.0.1, ..., 10.0.0.32	atlas32-ics0, ..., atlas63-ics0	10.0.0.33, ..., 10.0.0.64
System Interconnect	atlas0-eip0, ..., atlas31-eip0	10.64.0.1, ..., 10.64.0.32	atlas32-eip0, ..., atlas63-eip0	10.64.0.33, ..., 10.64.0.64
External Network[1]	atlas0-ext1, ..., atlas31-ext1	site-dependent	atlas32-ext1, ..., atlas63-ext1	site-dependent
Terminal Server	atlas-tc1	10.128.100.1	atlas-tc2	10.128.100.2

Element	Third Domain Name	Third Domain IP Address	Last Domain Name	Last Domain IP Address
Default Cluster Alias (domain name)	atlasD2	site-dependent	atlasD31	site-dependent
Nodes (node names on management network)	atlas64, atlas65, ..., atlas95	10.128.0.65, 10.128.0.66, ..., 10.128.0.96	atlas992, atlas993, ..., atlas1023	10.128.7.97, 10.128.7.98, ..., 10.128.7.128
Cluster Interconnect	atlas64-ics0, ..., atlas95-ics0	10.0.0.65,..., 10.0.0.96	atlas992-ics0,..., atlas1023-ics0	10.0.7.97,..., 10.0.7.128
System Interconnect	atlas64-eip0, ..., atlas95-eip0	10.64.0.65,..., 10.64.0.96	atlas992-eip0, ..., atlas1023-eip0	10.64.7.97 ,..., 10.64.7.128
External Network[1]	atlas64-ext1, ..., atlas95-ext1	site-dependent	atlas992-ext1,..., atlas1023-ext1	site-dependent
Terminal Server	atlas-tc3	10.128.100.3	atlas-tc32	10.128.100.32

[1]The suffix is `ext1` for the first external network interface, `ext2` for the second, and so on.

2.4 Plan the Local and Global Storage

To plan the storage, perform the following tasks:

- Confirm the Disk Layout (see Section 2.4.1 on page 2–8)
- Plan the Partition Sizing for Local Storage (see Section 2.4.2 on page 2–10)
- Review the System Storage Rules (see Section 2.4.3 on page 2–11)
- Plan the RAID Configuration (see Section 2.4.4 on page 2–12)
- Choose the Storage Management Tools (see Section 2.4.5 on page 2–15)

Note:

The diagrams in this section refer to File-Serving (FS) domains and Compute-Serving (CS) domains. Refer to Clustered Management Server (see Section 3.1.2 on page 3–3) for information on clustered management servers.

2.4.1 Confirm the Disk Layout

You must assign disks for both local and global storage in an HP AlphaServer SC system. The disk layout for the first domain, using the standard recommended configuration, is shown in Figure 2–1.

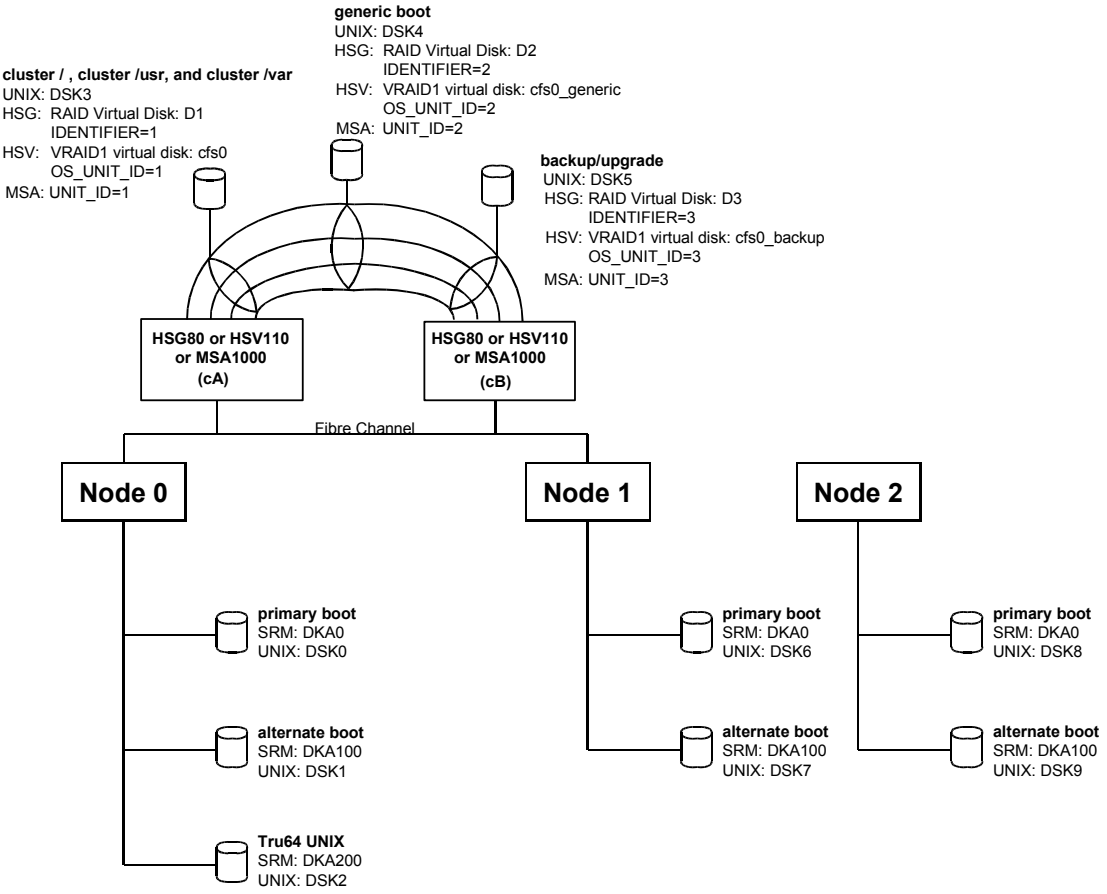

Figure 2–1 Disk Layout in an HP AlphaServer SC Domain

The disk layout for the first domain for the HP AlphaServer DS20L, using the standard recommended configuration, is shown in Figure 2–2.

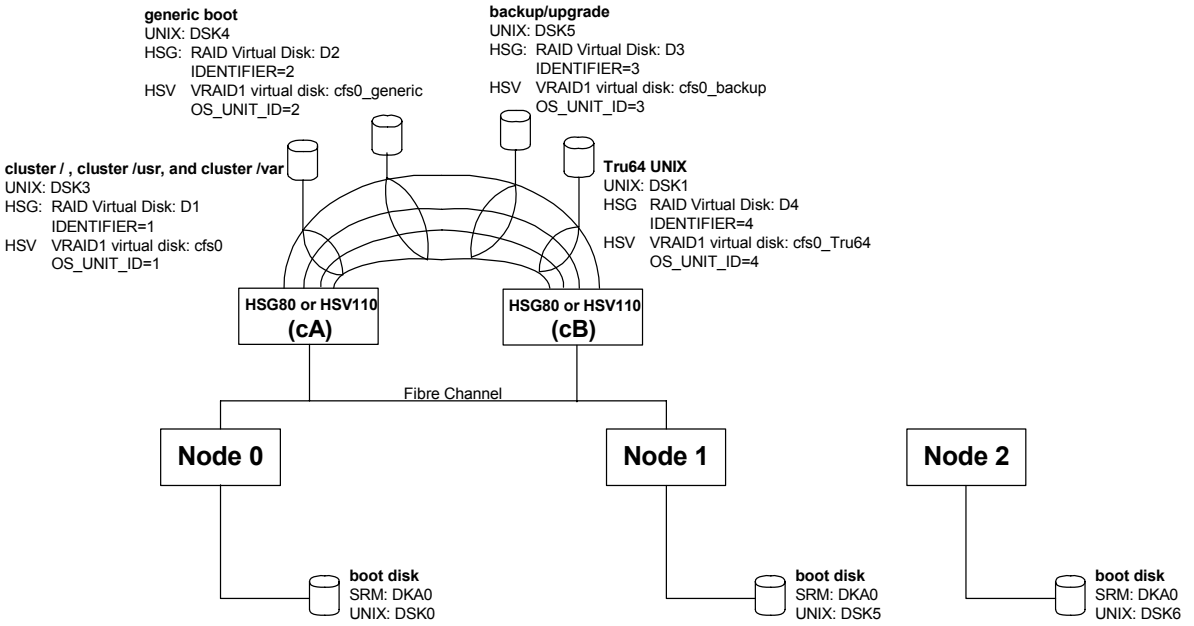

Figure 2–2 Disk Layout in a DS20L HP AlphaServer SC Domain

2.4.2 Plan the Partition Sizing for Local Storage

You should size the internal storage partitions to suit the configuration of the node and your temporary requirements. The system installation process suggests default sizes, which you can modify.

The operating system boot partition requires only 262MB.

The swap space partition size should be set to at least 1.25 times the size of the physical memory. This allows an entire job and system daemons to be swapped out in case of high priority or emergency work. For example, if the nodes that make up your HP AlphaServer SC system each have 4GB of physical memory, you should set the swap space to 5GB.

The local partition is mounted as `/cluster/members/member`*M*`/local`. The installation process creates a CDSL that equates this to `/local` on every node. Similarly, the CDSL `/tmp` equates to `/cluster/members/member`*M*`/tmp`.

The `/local` file system is used by RMS to hold job-specific files; for example, core dumps. The `/local` file system can also be used to hold component file systems for the parallel file system (PFS). Note, however, that `/local` is local to a node and, therefore, not highly available.

Figure 2–3 shows the recommended internal storage partitions for an HP AlphaServer SC system whose member nodes each have 4GB of physical memory.

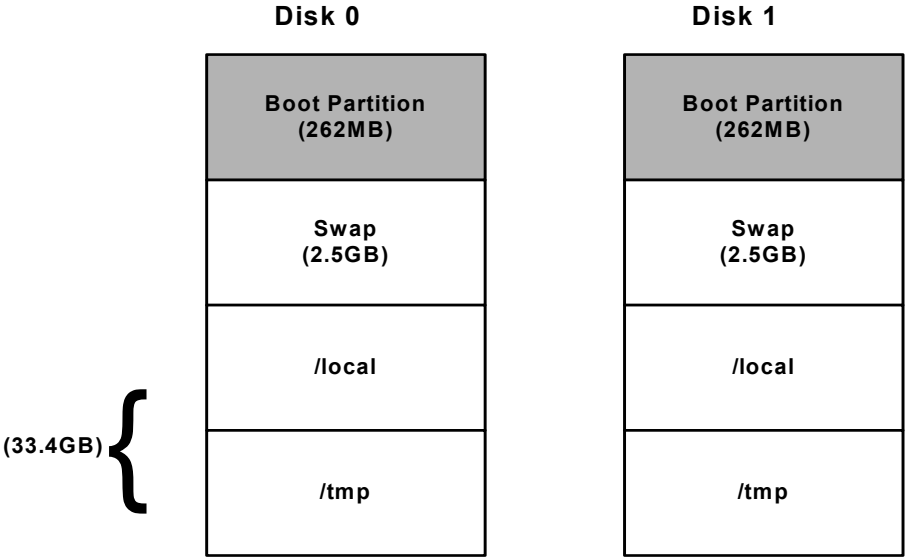

Figure 2–3 Recommended Internal Storage Partitions

Local storage is configured at system installation time. The installation process suggests a default subdivision, which you can accept or modify. Any modifications become the default, and are applied to all nodes.

It is also possible to configure selected nodes with layouts that are different from the default layout, as shown in the example in Table 2–3.

Table 2–3 Example (Not Default) Local Storage Layout

Node	Swap	/local	/tmp
0 and 1	44% (16G)	28% (10G)	28% (10G)
2 to 31	28% (10G)	36% (13G)	36% (13G)

To configure an alternate layout, rerun the `sra setup` command and select the size to be used by the majority of the nodes (for example Node 2 to 31 in Table 2–3). Run the `sra edit` command to alter the sizes used by the remaining nodes (Node 0 and 1).

2.4.3 Review the System Storage Rules

System and data storage uses external RAID storage systems connected by one or more Fibre Channel switches. While there is considerable flexibility and many possible configurations, the system must obey the following storage rules so that the system software will operate correctly:

- All data storage must be connected to the FS domain(s).
- Multiple-bus failover must be used, to improve availability and performance. All hosts must have operating-system software that supports multiple-bus failover mode.
- Each domain must have unique access to its own system storage devices (that is, disks) at a location in the storage infrastructure.
- The storage infrastructure that supports system storage must meet the following criteria:
  - The first two members of each domain must have a path to the storage.
  - The storage must be highly available; that is, dual HSG80 controllers, dual HSV110 controllers, or dual MSA1000 controllers, with each port of each controller connected to the Fibre Channel switch.

Note:

Dual redundant Fibre Fabric (that is, two Fibre Channel switches) can be configured, but is not required. For HP AlphaServer SC Version 2.6, dual redundant Fibre Fabric will be available as a *QuickSpec* option. Dual redundant Fibre Fabric is not available on the HP AlphaServer SC20 product, as there are only 2 PCI slots.

– Each system storage must have a configured spareset, to automatically source a replacement disk in the case of a failed Mirrorset member.

– System storage uses a combination of Mirrorsets and JBOD (just a bunch of disks), as described later in this chapter.

Note:

The criteria listed above apply to system storage only. Data storage can use any storage mechanism — RAIDset, Mirrorset, and so on — and can be configured in any way that satisfies customer requirements.

The SCFS file system is used to serve storage from the FS domain(s) to one or more CS domains.

System storage does not require a dedicated controller pair (and associated Fibre Channel switch). Instead, system storage disks may be placed anywhere in the available storage infrastructure. In effect, the CS domains can "piggyback" on the storage infrastructure that has been put in place to support the FS domains.

2.4.4 Plan the RAID Configuration

HP AlphaServer SC permits three kinds of shared storage technology for the domain system storage: HSG80 from the Enterprise Virtual Array (EVA) family, HSV110 from the EVA family, and MSA1000. Please consult the appropriate section to plan the RAID configuration for the appropriate technology.

- Plan the HSG80 RAID Configuration (see Section 2.4.4.1 on page 2–12)
- Plan the HSV110 RAID Configuration (see Section 2.4.4.2 on page 2–13)
- Plan the MSA1000 RAID Configuration (see Section 2.4.4.3 on page 2–14)

2.4.4.1 Plan the HSG80 RAID Configuration

When creating a RAID set, consider the following points:

- Number of disks

The smaller the number of disks (N) the higher the parity overhead (1/N). Using more than six disks, while economical in terms of parity overhead, will require two SCSI transfers to complete, because the RAID array only has six back-end SCSI buses. This is not optimal for performance. Using less than six disks will impair performance.

- Number of RAID sets

  The HSG80 gives optimal performance for sequential transfers with two concurrently active RAID sets, one per controller.

- Preferred controller for a unit

  Units (the OS-visible equivalent of a storage set) should be balanced across the different controllers using the SET UNIT command. When the preferred controller has been set for the units, you must restart both controllers before the assignment will take effect.

- Maximum cache transfer size

  When setting up a unit, set this parameter to a large number — the maximum value is 2048 blocks = 1MB. This allows the controller to aggregate data for a sequential stream in cache and to perform parity calculations in memory, avoiding read-modify-write cycles on the disk.

For more information, see the HP *StorageWorks HSG80 Array Controller CLI Reference Guide*.

2.4.4.2 Plan the HSV110 RAID Configuration

When configuring the EVA storage system, consider the following points:

- Virtual RAID (VRAID)

  The EVA uses virtualized RAID sets instead of conventional RAID.

- Disk Groups

  The EVA allows you to separate virtual disks into separate disk groups, distinct from and independent of the other disk groups in the subsystem. Disk group boundaries do allow some control over data placement and can be used to influence availability and performance. However, the benefits of virtualization are diminished by disk group boundaries.

  Advantages:

  – Creating virtual disks in different disk groups divides them into separate failure domains. In situations where the application retains two copies of the data, placing each copy in a separate disk group ensures that both copies of the data are not lost in case of failure.

Disadvantages:

- Capacity Utilization: separate disk groups creates boundaries across which spare capacity cannot be used.
- Spare Capacity: the spare capacity used to recover redundancy in the event of disk failure cannot be shared between disk groups. The more disk groups are created, the more spare capacity must be reserved.
- Performance: By creating different disk groups, you reduce the number of spindles to which a VRAID disk is distributed. This may impact performance.

- General Guidelines:
  - It is recommended that you do not attempt to calculate capacity requirements too finely. While virtualization improves capacity efficiency, the virtualization algorithms require free space. It is recommended to maintain a free capacity above 10%.
  - Create the least number of disk groups consistent with failure and performance isolation requirements.
  - Arrange disk groups vertically (visually).
  - Keep an even multiple of 2 for disk group size (for example 8, 12, 16)
  - Do not attempt to mix disk size and speed within a disk group. You can, however, mix disk sizes and speeds within different disk group sets.
  - Install disks from left to right. For system storage, add disks in pairs (that is, two at a time), and install half the disks on the top shelf and half on the bottom shelf.

2.4.4.3 Plan the MSA1000 RAID Configuration

The HP StorageWorks Modular SAN Array 1000 (MSA1000) storage controller is the entry level storage subsystem for HP AlphaServer SC. It is supported for single domain configurations.When planning the RAID configuration, consider the following points:

- Disk Capacity

  The MSA1000 storage building block provides 2 X 14-drive slots (dual Ultra-3 SCSI disk enclosures for a total of 28 disk drives in 4 Ultra-3 SCSI buses).

- Redundancy

  The MSA1000 controllers work in active/standby mode. Only one controller is active at a time.

- Management

  The MSA1000 configuration is performed using the Command Line Interface (CLI) and through a serial cable. For more information, refer to Section 3.17 on page 3–59.

2.4.5 Choose the Storage Management Tools

Several tools and methods are required to manage the physical components that make up the storage capabilities of an HP AlphaServer SC system. This section describes the following tasks:

- Managing Storage Arrays and Associated HSG80 RAID Controllers (see Section 2.4.5.1 on page 2–15)
- Using HP SANworks Command Scripter (see Section 2.4.5.2 on page 2–16)
- Managing a Fibre Channel Switch (see Section 2.4.5.3 on page 2–17)

2.4.5.1 Managing Storage Arrays and Associated HSG80 RAID Controllers

You can manage the storage arrays and HSG80 RAID controllers in four different ways:

- Connect a PC running the HP StorageWorks Command Console software, *via* a serial line, directly to the HSG80 RAID controllers. The StorageWorks command console client is an application that runs on Microsoft Windows 95, NT, or Windows 2000. The client provides both a CLI and a Graphical User Interface (GUI).
- Attach an ASCII terminal directly to the HSG80 RAID controllers. The example in Section 3.15 on page 3–27 describes how to use an ASCII terminal to configure the RAID in multiple-bus failover mode.
- Connect the HSG80 RAID controllers to a terminal server using a serial line.
- Use the HP SANworks Command Scripter software product. This allows you to access the CLI of the HSG80 RAID controllers from any host that has a Fibre Channel HBA card connected by the Fibre Channel switch to the HSG80 RAID controllers. For more information on HP SANworks Command Scripter, see Section 2.4.5.2 on page 2–16.

Using a terminal server with telnet access provides the flexibility to manage many units from a PC or workstation anywhere on your network. Please see the documentation supplied with your hardware, and the StorageWorks Command Console software documentation, for details.

Storage configured as described in this document is highly available. The system storage for each domain is located on a Mirrorset, and a spareset is created to automatically source a replacement disk in the case of a failed Mirrorset member. Storage created for user data can be created using any of the options supplied by your storage subsystem. Carefully plan the type of storage (RAIDset, Stripeset, Mirrorset) to accomplish the correct combination of characteristics (for example, availability, I/O rate) for your environment and applications. Please see the HP *StorageWorks HSG80 Array Controller Configuration Guide* for a discussion of the types of storage available and how to configure them, and how to check for errors.

2.4.5.2 Using HP SANworks Command Scripter

The HP SANworks Command Scripter software product allows you to access the CLI of the HSG80 RAID controllers from any host that has a Fibre Channel HBA card connected by the Fibre Channel switch to the HSG80 RAID controllers.

HP SANworks Command Scripter is a separately orderable product. To install HP SANworks Command Scripter, insert and mount the product CD-ROM on any node in the domain and follow the installation instructions in the accompanying documentation. Alternatively, copy the contents of the UNIX directory from the CD-ROM to a convenient directory, and install from there.

Once installed, use the HP SANworks Command Scripter as described in this section.

HP SANworks Command Scripter interacts with the HSG80 RAID controller through the Fibre Channel switch. To specify which HSG80 RAID controller you are interacting with, you must specify the name of the device (disk name) that the operating system has assigned.

To identify the device, use the `hwmgr` command as shown in the following example:

```
atlas0# hwmgr -v dev
 HWID:   Device Name              Mfg         Model            Location
------------------------------------------------------------------------------
    4:   /dev/kevm
   51:   /dev/disk/floppy0c                   3.5in floppy     fdi0-unit-0
   56:   /dev/disk/dsk0c          HP          BD018635C4       bus-0-targ-0-lun-0
   57:   /dev/disk/dsk1c          HP          BD018122C9       bus-0-targ-1-lun-0
   58:   /dev/disk/dsk2c          HP          BD018122C9       bus-0-targ-2-lun-0
   59:   /dev/disk/dsk3c          DEC         HSG80            bus-1-targ-0-lun-1
   60:   /dev/disk/dsk4c          DEC         HSG80            bus-1-targ-0-lun-2
   61:   /dev/disk/dsk5c          DEC         HSG80            bus-1-targ-0-lun-3
   62:   /dev/disk/dsk6c          DEC         HSG80            bus-1-targ-0-lun-4
   63:   /dev/disk/cdrom0c        HP          CDR-8435         bus-3-targ-0-lun-0
```

In this example, there is only one HSG80 RAID controller (`bus-1-targ-0`). You can use `dsk3`, `dsk4`, `dsk5`, or `dsk6` to access this controller. It does not matter which of these devices you use — in each case, the commands go to the same controller.

To execute CLI commands, you can either execute one command at a time, or you can place your commands in a file and execute the file.

The following example shows how to execute a single command:

```
atlas0# cmdscript -f dsk6c 'show units'
LUN                                        Uses                Used by
------------------------------------------------------------------------------
D1                                         MIRRORA             (partition)
D2                                         DISK10100           (partition)
D3                                         DISK10200           (partition)
D4                                         RAID1               (partition)
```

The following example shows how to execute commands in a file:

```
atlas0# cmdscript -f dsk6c < cmdfile.txt
```

2.4.5.3 Managing a Fibre Channel Switch

The most basic way of managing a StorageWorks Fibre Channel switch is by telneting to the switch and using a command line interface. Please see the HP *StorageWorks Fibre Channel Storage Switch User's Guide* for details.

The only suggested StorageWorks Fibre Channel Switch management task is switch zoning, to isolate different domains sharing a switch — see Section 3.14, page 3–26.

2.5 Choose the Root Password

You must select a root password before you perform any installation steps.

When the installation is complete, you can change the root password.

2.6 Record the External Gateway IP Address

Ask your site network administrator for the IP address of the external gateway, and record this value in Appendix D.

3
Physical Installation

This chapter describes how to physically install the HP AlphaServer SC system.

Use the checklist provided in Appendix A (if using a management server) or Appendix B (if not using a management server), to ensure that you complete all installation tasks in the correct order. If adding a management server to an HP AlphaServer SC system after system creation, use the checklist provided in Appendix C to ensure that you complete all installation tasks in the correct order. The information in this chapter is structured as follows:

- Management Server (see Section 3.1 on page 3–2)
- Compute Nodes and File Serving Nodes (see Section 3.2 on page 3–4)
- Physical Installation Overview (see Section 3.3 on page 3–4)
- Connect the Management Network (see Section 3.4 on page 3–11)
- Populate the HP AlphaServer SC PCI Slots (see Section 3.5 on page 3–17)
- Configure Hardware for a Dual-Rail Configuration (see Section 3.6 on page 3–20)
- Connect the HP AlphaServer SC Interconnect (see Section 3.7 on page 3–20)
- Connect the Node Console Port (see Section 3.8 on page 3–21)
- Configure the HP AlphaServer SC Interconnect Control Card with an IP Address (see Section 3.9 on page 3–22)
- Configure the Terminal Servers with an IP Address (see Section 3.10 on page 3–22)
- Connect the Fibre Channel Switches (see Section 3.11 on page 3–23)
- Verify Storage Component Revisions (see Section 3.12 on page 3–23)
- Configure SAN Switch Network Addressing (see Section 3.13 on page 3–24)
- Switch Zoning (see Section 3.14 on page 3–26)
- Configure the System Storage on the HSG80 (see Section 3.15 on page 3–27)

- Configure the System Storage on the HSV110 (see Section 3.16 on page 3–42)
- Configure the System Storage on the MSA1000 (see Section 3.17 on page 3–59)

3.1 Management Server

A system can optionally be configured with a front-end management server. If the front-end management server is configured, certain housekeeping functions run on this server. This management server is not connected to the high-speed interconnect. If the management server is not configured, the housekeeping functions run on Node 0 (zero).

3.1.1 Standalone Management Server

This is a non-clustered Tru64 node. As with lead members of the HP AlphaServer SC clusters, it is configured with two ethernet interfaces: one for management LAN and one for external LAN. This node is not connected to the HP AlphaServer SC Interconnect. The node types supported in this role are HP AlphaServer DS10, HP AlphaServer DS20E, and HP AlphaServer ES45. The management server node will be configured as shown in the diagram. Figure 3–1 shows an example HP AlphaServer SC standalone management server.

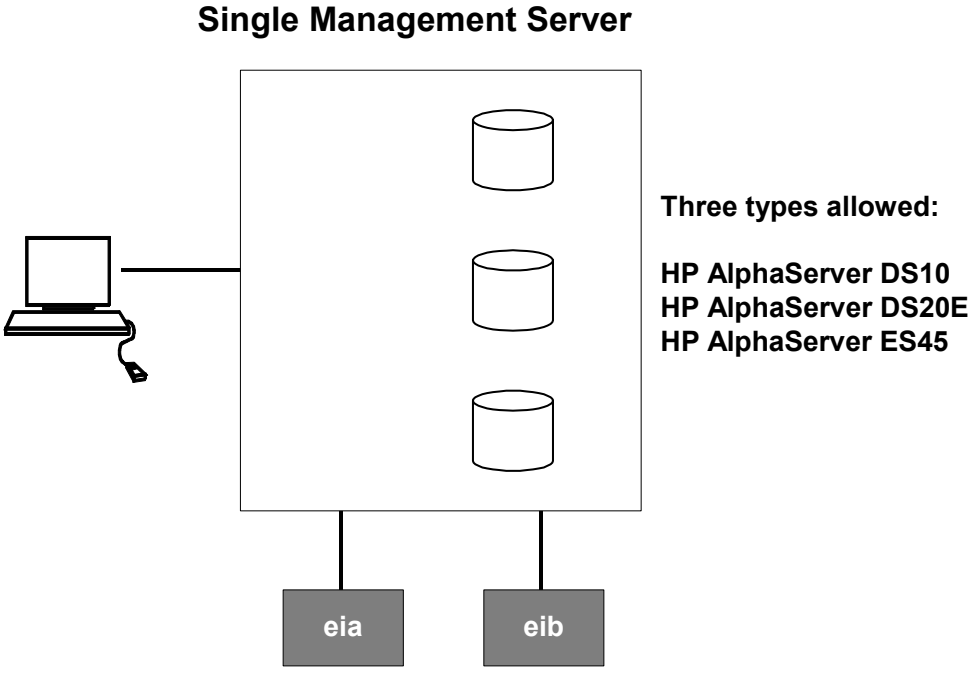

Figure 3–1 Single Management Server

3.1.2 Clustered Management Server

This is a standard TruCluster Server software implementation operating over a Gigabit Ethernet Interconnect and should not be confused with the HP AlphaServer SC cluster itself which operates over the HP AlphaServer SC Interconnect. In the HP AlphaServer SC Version 2.6 release, this cluster has been qualified at two nodes. The node types supported in this role are HP AlphaServer DS10, HP AlphaServer DS20E, and HP AlphaServer ES45. Both nodes should have identical hardware specifications. The implementation will utilize Fibre Channel shared storage provided by the HSG80, HSV110, or the MSA1000 technology.

Figure 3–2 shows an example HP AlphaServer SC dual management server and how the management server nodes are connected.

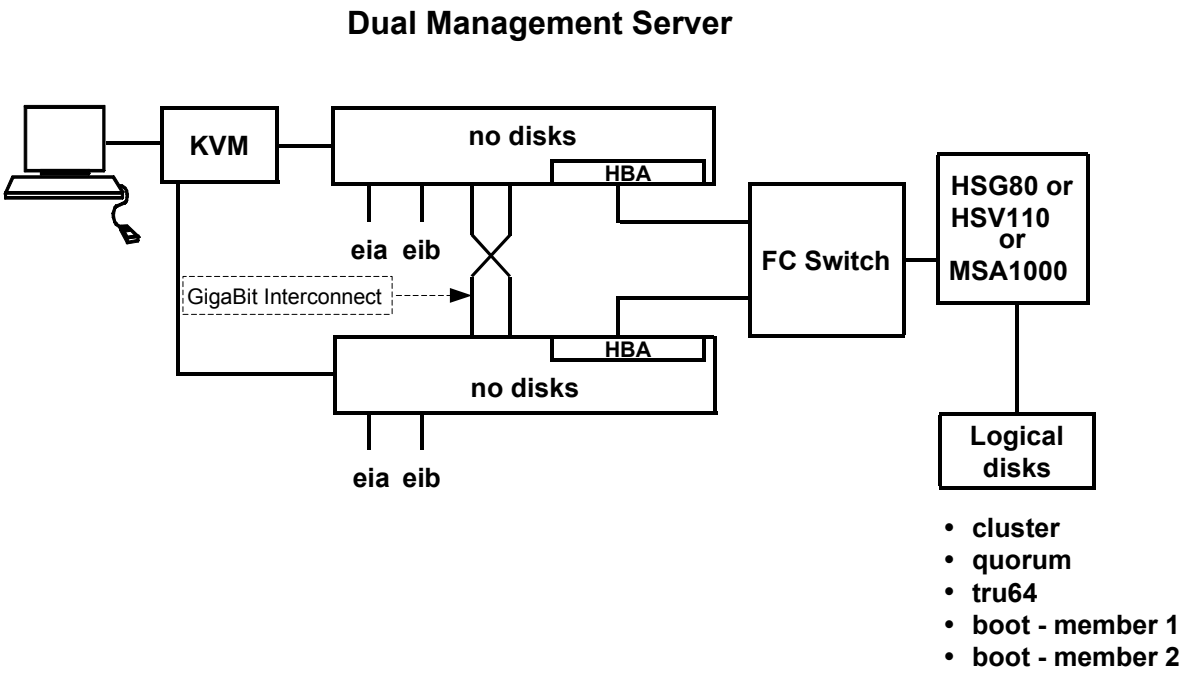

Figure 3–2 Dual Management Server

3.2 Compute Nodes and File Serving Nodes

The HP AlphaServer SC system is comprised of multiple domains. There are two types of domains: File-Serving (FS) domains and Compute-Serving (CS) domains. Nodes within these domains are called Compute Nodes or File Serving Nodes.

3.3 Physical Installation Overview

Figure 3–3 on page 3–5 shows an example HP AlphaServer SC configuration for a 16-node system.

Figure 3–4 to Figure 3–7 show how the first three nodes are connected to the networks of the HP AlphaServer SC system, depending on the type of HP AlphaServer SC Interconnect switch used. See Table 3–1 to identify which figure applies to your system.

Table 3–1 How to Connect the Components of an HP AlphaServer SC System

If you are using...	See...
HP AlphaServer SC 16-port switch	Figure 3–4 on page 3–6
HP AlphaServer SC 128-port switch	Figure 3–5 on page 3–7
HP AlphaServer SC 16-port switch and DS20L Nodes	Figure 3–6 on page 3–8
HP AlphaServer SC 128-port switch and DS20L Nodes	Figure 3–7 on page 3–9
HP AlphaServer SC 128 Switches in a federated configuration.	Figure 3–8 on page 3–10

Note:

These diagrams are not to scale.

The nodes in these diagram have been re-arranged to show the cables more clearly — in a network cabinet, node numbers increase from bottom to top.

Figure 3–3 shows an example HP AlphaServer SC configuration, for a 16-node system. In this diagram, the ES4*x* value is used to represent either HP AlphaServer ES40, HP AlphaServer ES45, or HP AlphaServer DS20L systems.

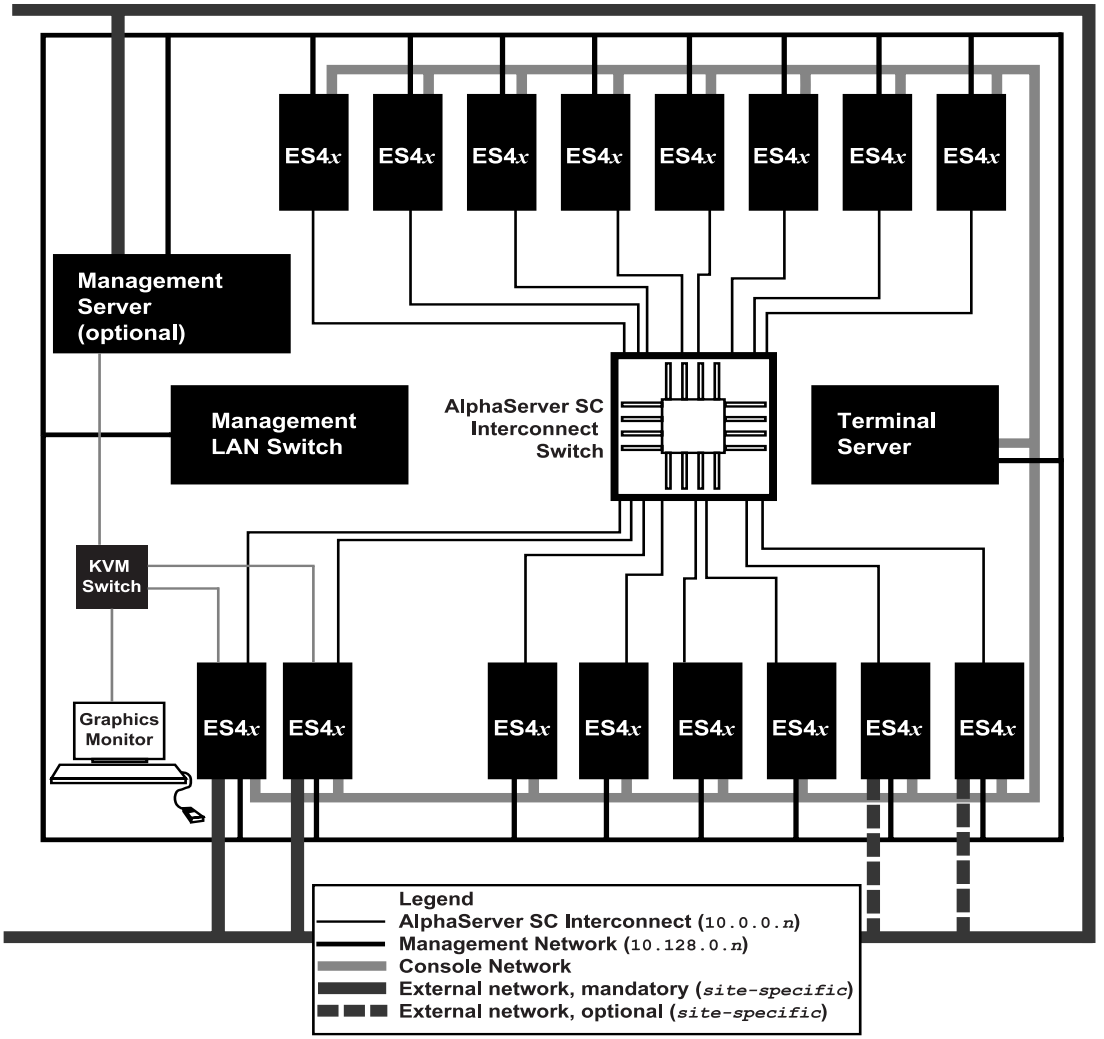

Figure 3–3 HP AlphaServer SC Configuration for a 16-Node System

Figure 3–4 shows how the first three HP AlphaServer ES40 nodes are connected to the networks of an HP AlphaServer SC system containing an HP AlphaServer SC 16-port switch, an optional management server, and an optional second rail.

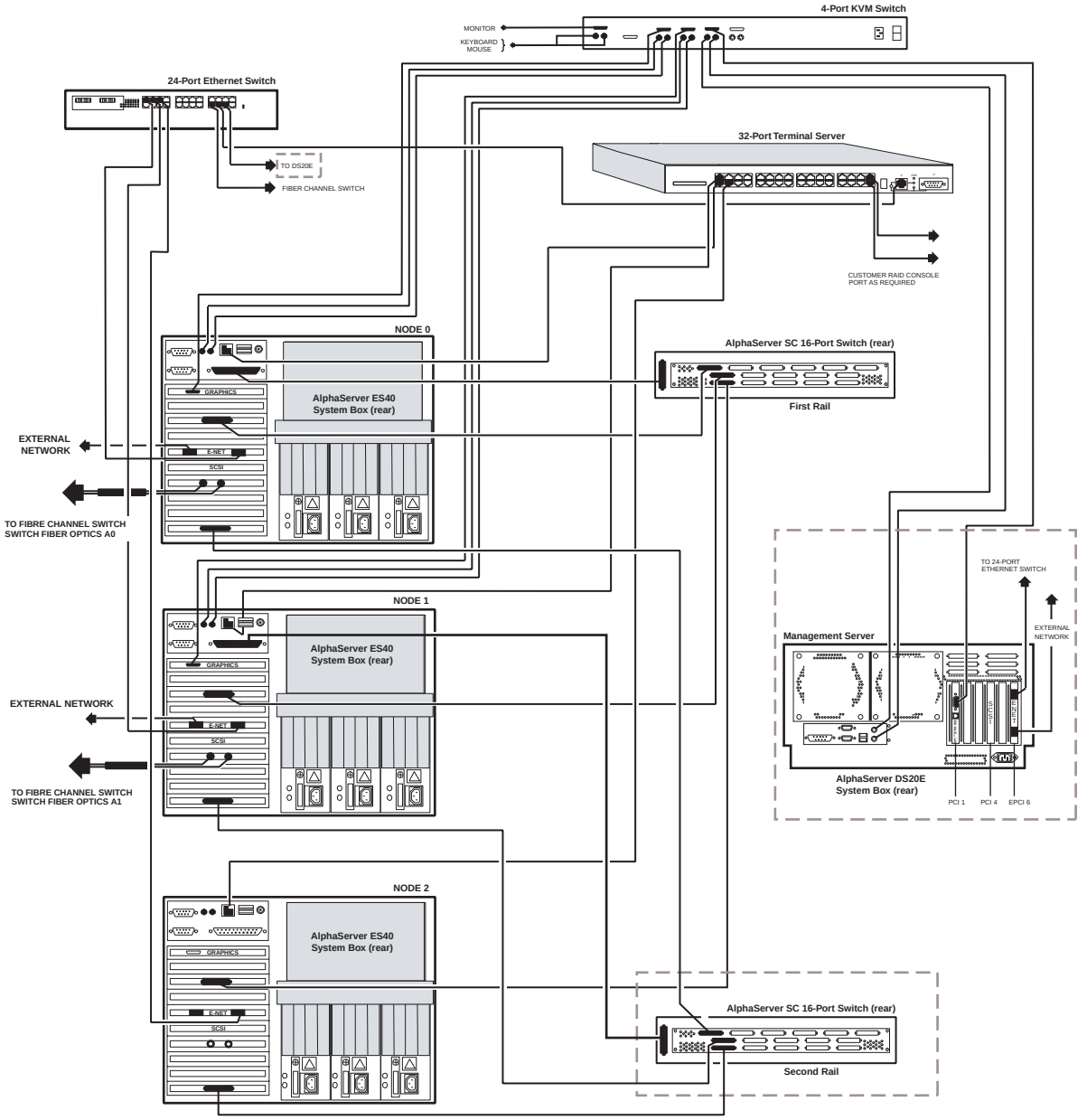

Figure 3–4 Node Network Connection When Using an HP AlphaServer SC 16-Port Switch

Figure 3–5 shows how the first three nodes are connected to the networks of an HP AlphaServer SC system containing an HP AlphaServer SC 128-port switch, an optional management server, and an optional second rail.

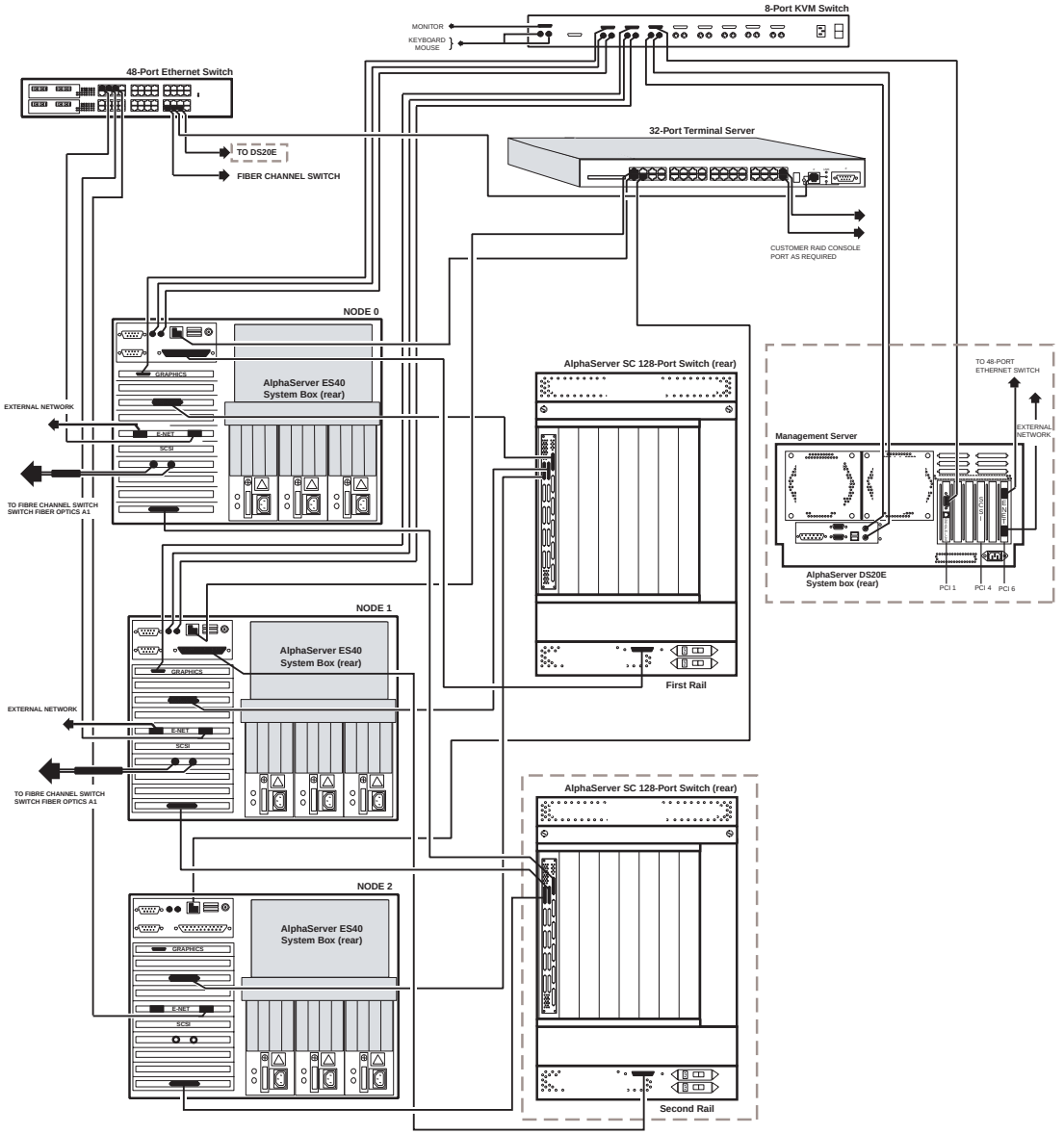

Figure 3–5 Node Network Connection When Using an HP AlphaServer SC 128-Port Switch

Figure 3–6 shows how the first two HP AlphaServer DS20L nodes are connected to the networks of the HP AlphaServer SC system containing an HP AlphaServer SC 16-port switch and a management server.

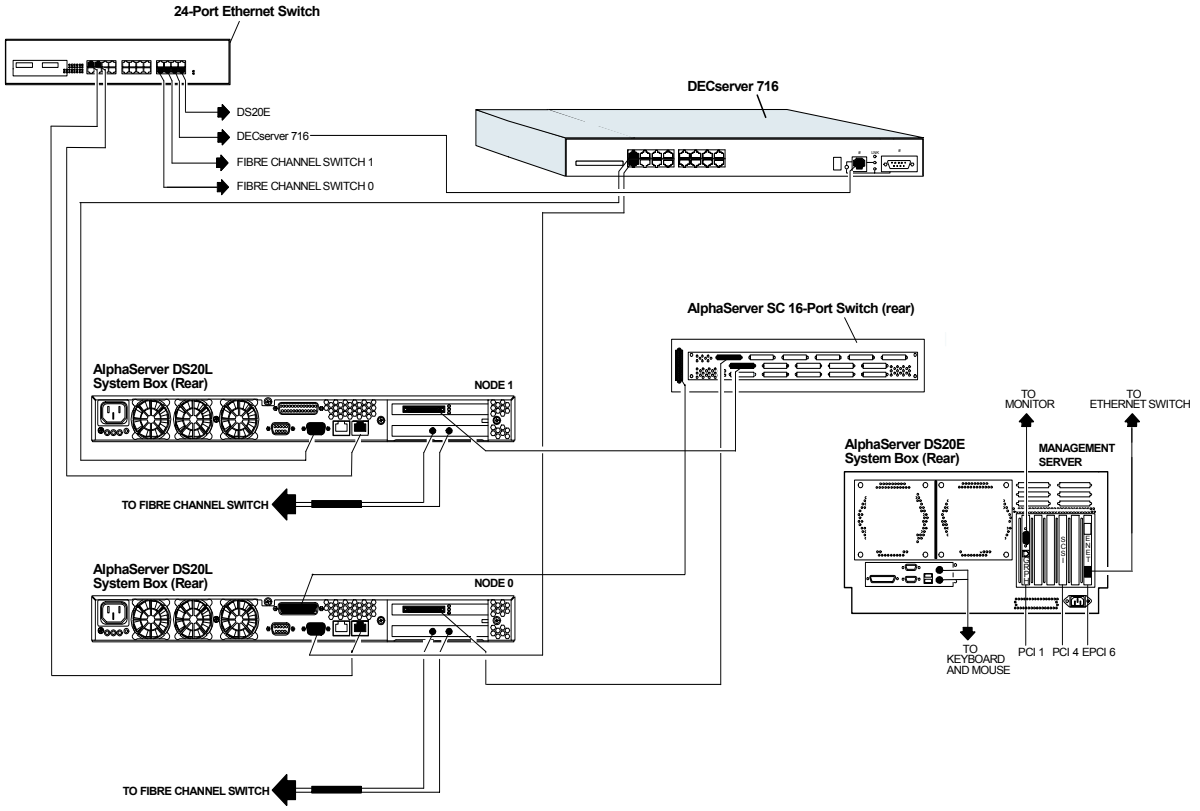

Figure 3–6 Node Network Connections: HP AlphaServer SC 16-Port Switch, HP AlphaServer DS20L Nodes

Figure 3–7 shows how the first two HP AlphaServer DS20L nodes are connected to the networks of the HP AlphaServer SC system containing an HP AlphaServer SC 128-way switch and a management server.

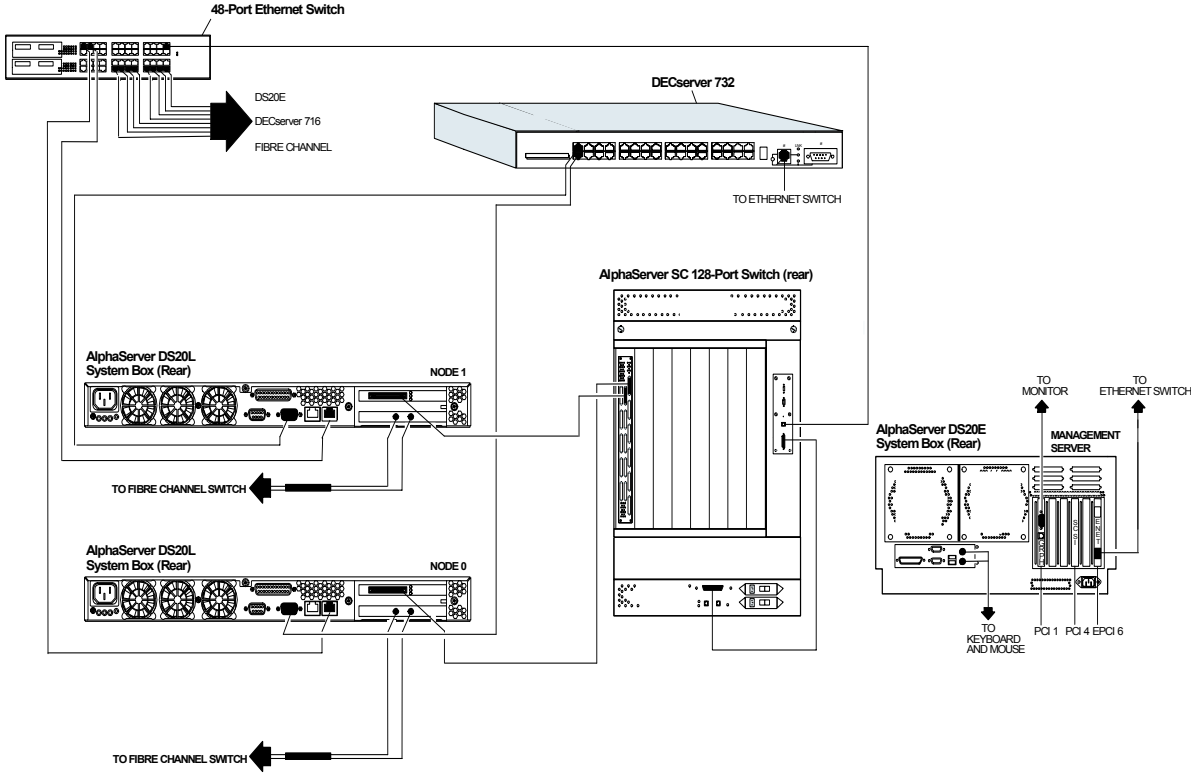

Figure 3–7 Node Network Connections: HP AlphaServer SC 128-Port Switch, HP AlphaServer DS20L Nodes

Figure 3–8 shows the hardware connections when using a federated HP AlphaServer SC Interconnect configuration.

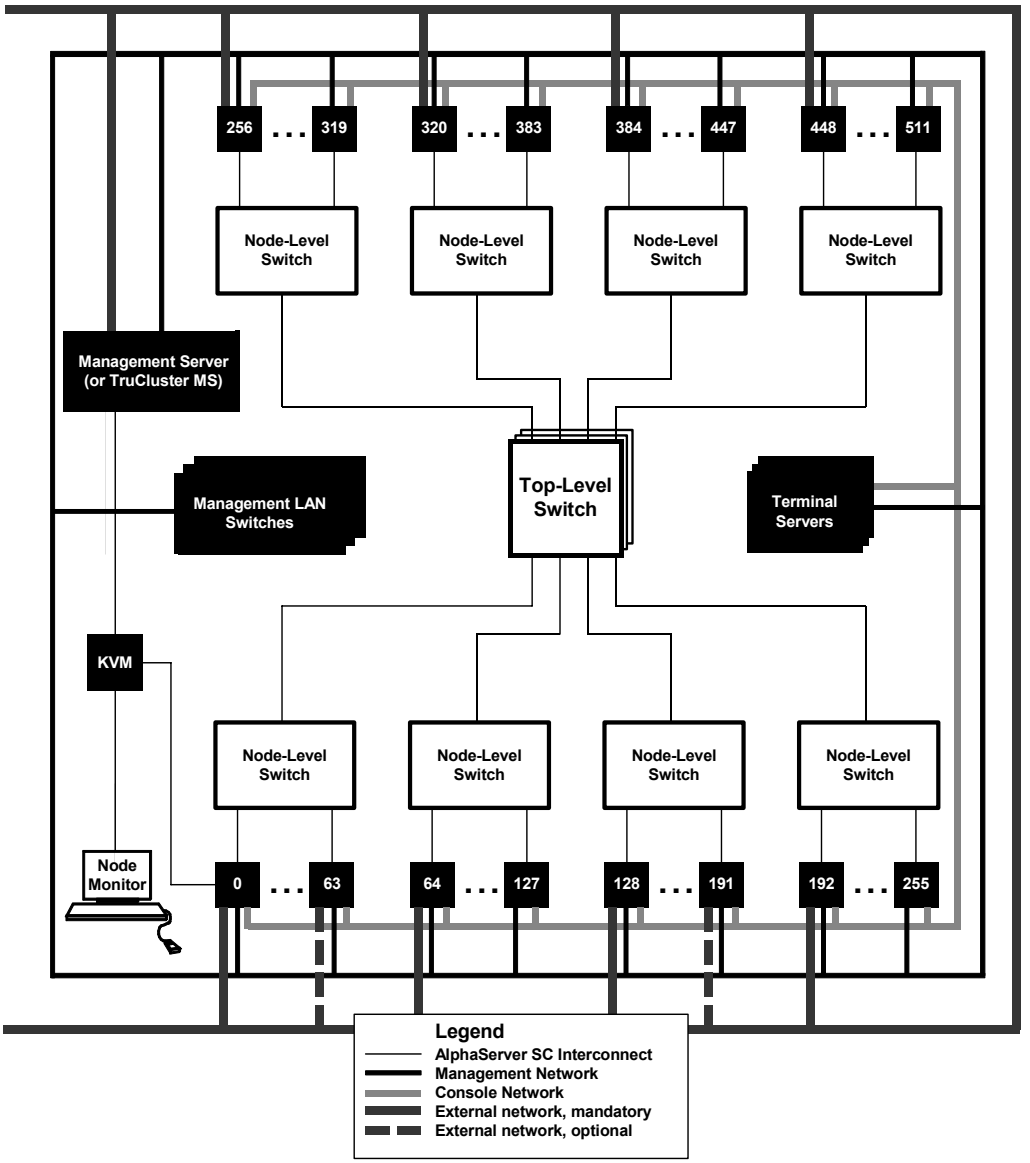

Figure 3–8 Federated HP AlphaServer SC Interconnect Configuration

3.4 Connect the Management Network

This section describes how to connect the management network and subsequently how to configure each kind of Ethernet switch supported by HP AlphaServer SC Version 2.6. The information is structured as follows:

- Cable the Management Network (see Section 3.4.1 on page 3–11)
- Configure the Summit Switch (see Section 3.4.2 on page 3–12)
- Configure the Procurve Switch (see Section 3.4.3 on page 3–14)

Please follow the appropriate section based on your switch type.

3.4.1 Cable the Management Network

Cable the management network as follows:

1. The management network interface adapter is the first network adapter on a node (in UNIX it is called `ee0`, in the SRM Console it is called `eia0`).

   Note:

   For the HP AlphaServer DS20L product, the second network adapter is used as the management network (in UNIX it is called `ee1`, in the SRM Console it is called `eib0`). This adaptation is required in order to implement the WOL functionality.

   Note:

   In Tru64 UNIX Version 5.1B, the device probe order is system-dependent. On systems with more than one network interface, the SRM equivalent of `ee0` may not be `eia0`.

   Connect the appropriate adapter — on each node, and on the management server (if used) — with an appropriate cable to a port on the Summit switch. It may be attached to any port.
2. Connect the HP AlphaServer SC Interconnect Control Processor to a port on the Summit switch. Record the port number in Appendix D; you will need this number in step 8 of Section 3.4.2 and step 7 of Section 3.4.3.
3. Connect the terminal server to a port on the Summit switch. Record the port number in Appendix D; you will need this number in step 9 of Section 3.4.2 and step 8 of Section 3.4.3.
4. Connect the Fibre Channel switch to a port on the Summit switch. Record the port number in Appendix D; you will need this number in step 10 of Section 3.4.2 and step 9 of Section 3.4.3.

3.4.2 Configure the Summit Switch

Note:

This section describes how to connect the management network using the 48-port Summit switch from Extreme Networks. If you are using a 24-port Summit switch, substitute “24” for “48” in the commands in this section.

Connect the management network as follows:

1. Connect a terminal to the Summit switch.
2. Power on the Summit switch. When the switch has powered up, the `login` prompt appears. Enter the username `admin`, as follows:
   ```
   login: admin
   ```
3. When prompted for the password, press the Return key on the terminal. When the system responds with the `Summit` prompt, enter the following commands (where `10.128.103.1` is the IP address of the Summit switch, and `10.128.0.1` is the IP address of the first node — see Table 2–1 on page 2–5 for more information about IP addresses):
   ```
   * Summit 48:1 # config vlan default ipaddress 10.128.103.1 255.255.0.0
   * Summit 48:2 # config iproute add default 10.128.0.1
   ```

   Note:

   In the case of a clustered management server, the default address should be set to 10.128.101.1 (the IP address of the first node of the management server cluster).

4. Run the following command to allow you to use a Web interface to manage your switch:
   ```
   * Summit 48:3 # enable web
   ```
   You are reminded that you must reboot the switch before this command will take effect. However, you do not need to reboot the switch at this point (you will reboot in step 12).
5. Set the time zone (where +0 specifies the time difference in minutes from Greenwich Mean Time (GMT); for example, specify +60 for Paris, or -300 for New York), as follows:
   ```
   * Summit 48:4 # config timezone +0
   ```
6. Set the site-specific admin password, as follows:
   ```
   * Summit 48:5 # config account admin
   password:
   Reenter password:
   ```
   Record the admin password in a safe place — you are prompted for this password each time you log into the Summit switch.
7. Configure each port that is attached to the management network interface adapter of each node, and the port that is attached to the management network interface adapter of the management server (if used), by running one of the following commands:

- If the nodes use an Ethernet card from the DE600 family, run the following command:
  ```
  * Summit 48:6 # config ports 1-48 auto on
  ```
- If the nodes use an Ethernet card from the DE500 family, run the following command:
  ```
  * Summit 48:6 # config ports 1-48 auto off duplex full
  ```

  If you set all ports to full duplex, as in the above example, ensure that you reset the appropriate ports to half duplex; for example, the terminal server port (see step 8).

Note:

The DE600 family Ethernet cards cannot communicate correctly with ports that are configured for `duplex full`. The DE500 family Ethernet cards cannot communicate correctly with ports that are configured for `auto on`. If you have problems establishing connectivity with either of these types of cards, please review your settings.

---

8. Configure the port that is connected to the HP AlphaServer SC Interconnect Control Processor — set this port to 100Mbps full duplex. You should have already recorded this port number in Appendix D (see step 4 in Section 3.4.1 above). For example, if the HP AlphaServer SC Interconnect Control Processor is connected to port 46, use the following command:
   ```
   * Summit 48:7 # config ports 46 auto on
   ```
9. Configure the port that is connected to the terminal server — set this port to 10Mbps half duplex. You should have already recorded this port number in Appendix D (see step 2 in Section 3.4.1 above). For example, if the terminal server is connected to port 47, use the following command:
   ```
   * Summit 48:8 # config ports 47 auto off speed 10 duplex half
   ```
10. Configure the port that is connected to the Fibre Channel switch. You should already have recorded this number in Appendix D (see step 4 in Section 3.4.1 above). The command will differ depending on the model of the Fibre Channel switch. Newer models support a 100MB Ethernet connection. If the switch is connected to port number 48, one of the following commands will apply:

    If the switch is a newer 2GB SAN switch model, the command is:
    ```
    * Summit 48:9 # config ports 48 auto on
    ```

    If the switch is an older 1GB SAN switch model, the command is:
    ```
    * Summit 48:9 # config ports 48 auto off speed 10 duplex half
    ```
11. Save this configuration, as follows:
    ```
    * Summit 48:10 # save
    ```
12. Reboot the switch to apply your changes, as follows:

```
* Summit 48:11 # reboot
```

Note:

Do not enable spanning tree protocol (STP) on the Summit switch.

If your HP AlphaServer SC system has more than 48 nodes, repeat the above steps to configure as many Summit switches as necessary. If you have more than one Summit switch, you must connect the Summit switches to each other using fibre connectors; that is, connect ports 50 and 50R on one Summit switch to ports 49 and 49R respectively on the next Summit switch.

For more information, see the *Summit Hardware Installation Guide* and the *ExtremeWare Software User Guide*.

3.4.3 Configure the Procurve Switch

Connect the management network as follows:

1. Connect a terminal to the Procurve switch.
2. Power on the Procurve switch. When the switch has powered up, the following prompt is displayed:
   `Waiting for Speed Sense.  Press <Enter> twice to continue.`

   There is no default password. Press carriage return twice to display the following user prompt:
   `HP ProCurve Switch 2650#`
3. At the user prompt, enter the command "`setup`" to receive the Switch Setup menu where the default values will be shown for each field. Within the Switch Setup menu, you can use the arrow keys to navigate through the fields on the menu and use the `<space>` key to toggle field choices.
   `HP ProCurve Switch 2650# setup`

```
HP ProCurve Switch 2650                                  1-Jan-1990   0:10:26
========================- CONSOLE - MANAGER MODE -============================
                               Switch Setup

  System Name : HP ProCurve Switch 2650
  System Contact :
  Manager Password :                   Confirm Password :
  Logon Default : CLI                  Time Zone [0] : 0
  Community Name : public              Spanning Tree Enabled [No] : No

  Default Gateway :
  Time Sync Method [None] : TIMEP
  TimeP Mode [Disabled] : Disabled
```

```
IP Config [DHCP/Bootp] : DHCP/Bootp
IP Address  :
Subnet Mask :

Actions->   Cancel     Edit     Save     Help
```

4. For the HP AlphaServer SC, the recommended values within the Switch Setup menu are as follows:

   ```
   Manager Password : <Site specific choice>
   Confirm Password : <As above>
   Time Zone : 0
   Spanning Tree Enabled : No
   IP Config : Manual
   IP Address  :  10.128.103.1
   Subnet Mask :  255.255.0.0
   Default Gateway : 10.128.0.1
   ```

   (where `10.128.103.1` is the IP address of the Summit switch, and `10.128.0.1` is the IP address of the first node — see Table 2–1 on page 2–5 for more information about IP addresses).

   Note:

   Do not enable spanning tree protocol (STP) on the switch.

   In the case of a clustered management server, the default gateway should be set to `10.128.101.1` (the IP address of the first node of the management server cluster).

   When accessing the console once a password is configured, you will be prompted with a password prompt. If you enter no password at that prompt, you will be granted a minimal CLI with the following prompt "`HP ProCurve Switch 2650>`", however if you enter the correct password, then you will be placed into a fully functional CLI with prompt "`HP ProCurve Switch 2650#`"

   Within the Switch Setup menu, you can use the arrow keys to navigate through the fields on the menu and use the `<space>` key to toggle field choices.

   Once comfortable with the contents of the menu, you should press `<enter>` to move focus to the Actions line.

   From the Actions line, you can elect to cancel the changes, edit the form again, save the form or access online help.

5. For the HP AlphaServer SC, all nodes will have their management interfaces configured to a fixed configuration of 100BaseT Full Duplex. The ports on the Procurve unit are configured to auto-negotiation by default, and in compliance with IEEE 802.3, the link speed will be negotiated to 100BaseT half duplex. Left in this condition, this will result in high error rates and inefficient communications between the switch and the node.

One solution is to make sure that all nodes themselves are configured to auto — in which case, the link speeds will autonegotiate correctly as 100BaseT full duplex. The more predictable solution is to configure the ports to a fixed speed and mode. This is accomplished from the configuration context.

Enter the configuration context from the user prompt as follows:

```
HP ProCurve Switch 2650# config
HP ProCurve Switch 2650(config)#
```

6. From the configure context, configure each port that is attached to the management network interface adapter of each node, and the port that is attached to the management network interface adapter of the management server (if used), by running the following command:
   ```
   HP ProCurve Switch 2650(config)# interface ethernet 1-48 speed-duplex 100-full
   ```
   If you set all ports to full duplex, as in the above example, ensure that you reset the appropriate ports to half duplex; for example, the terminal server port (see step 8).
7. From the configure context, configure the port that is connected to the HP AlphaServer SC Interconnect Control Processor — set this port to 100Mbps full duplex. You should have already recorded this port number in Appendix D (see step 4 in Section 3.4.1 above). For example, if the HP AlphaServer SC Interconnect Control Processor is connected to port 46, use the following command:
   ```
   HP ProCurve Switch 2650(config)# interface ethernet 46 speed-duplex 100-full
   ```
8. From the configure context, configure the port that is connected to the terminal server — set this port to 10Mbps half duplex. You should have already recorded this port number in Appendix D (see step 2 in Section 3.4.1 above). For example, if the terminal server is connected to port 47, use the following command:
   ```
   HP ProCurve Switch 2650(config)# interface ethernet 47 speed-duplex 10-half
   ```
9. From the configure context, configure the port that is connected to the Fibre Channel switch. You should already have recorded this number in Appendix D (see step 4 in Section 3.4.1 above). The command will differ depending on the model of the Fibre Channel switch. Newer models support a 100MB Ethernet connection. If the switch is connected to port number 48, one of the following commands will apply:

   If the switch is a newer 2GB SAN switch model, the command is:
   ```
   HP ProCurve Switch 2650(config)# interface ethernet 48 speed-duplex 100-full
   ```
   If the switch is an older 1GB SAN switch model, the command is:
   ```
   HP ProCurve Switch 2650(config)# interface ethernet 48 speed-duplex 10-half
   ```
10. To leave the configuration context, the command line interface, and then to save the configuration changes, enter the following sequence:

```
HP ProCurve Switch 2650(config)# exit
HP ProCurve Switch 2650# logout
Do you want to log out [y/n]? y
Do you want to save current configuration [y/n]? y
```

If your HP AlphaServer SC system has more than 48 nodes, repeat the above steps to configure as many Procurve switches as necessary. If you have more than one Procurve switch, you must connect the Procurve switches to each other using fibre connectors; that is, connect ports 50 on one switch to ports 49 on the next switch.

3.5 Populate the HP AlphaServer SC PCI Slots

The following sections describe how to populate the HP AlphaServer ES40, HP AlphaServer ES45 and HP AlphaServer DS20L PCI slots.

3.5.1 HP AlphaServer ES40 PCI Slots

Note:

The six-slot HP AlphaServer ES40 Model 1 system is not supported.

You should populate the HP AlphaServer ES40 PCI slots as described in Table 3–2.

Table 3–2 Populating the HP AlphaServer ES40 PCI Slots

Slot	Description	Part Number	Priority
1	Graphics Card	SN-PBXGF-AB SN-PBXGK-BB	1 1
2	DO NOT USE		
3	HP AlphaServer SC Elan #1	3X-CCNNA-AA	1
4	DO NOT USE		
5	Ethernet Card #1	3X-DE602-AA	1
6	SCSI Adapter #1	3X-KZPCA-AA	1
7	Fibre Channel #1	DS-KGPSA-CA	1
8	Fibre Channel #2	DS-KGPSA-CA	1

Table 3–2 Populating the HP AlphaServer ES40 PCI Slots

Slot	Description	Part Number	Priority
9	Gigabit Ethernet #1	DEGPA-SA	1
	HIPPI Adapter #1	KZPHA-AX	1
	ATM Adapter (622M) #1	3X-DAPCA-FA	1
	ATM Adapter (155M) #1	3X-DAPBA-FA	1
	ATM Adapter UTP (155M) #1	3X-DAPBA-UA	1
	SCSI Adapter #2	3X-KZPCA-AA	1
10	AlphaServer SC Elan #2	3X-CCNNA-AA	1
	Gigabit Ethernet #1	DEGPA-SA	2
	HIPPI Adapter #1	KZPHA-AX	2
	ATM Adapter (622M) #1	3X-DAPCA-FA	2
	ATM Adapter (155M) #1	3X-DAPBA-FA	2
	ATM Adapter UTP (155M) #1	3X-DAPBA-UA	2
	SCSI Adapter #2	3X-KZPCA-AA	2

For more information on how to physically install a PCI card or other module, please refer to the *HP AlphaServer ES40 Service Guide*.

3.5.2 HP AlphaServer ES45 PCI Slots

In the ten-slot HP AlphaServer ES45 Model 2 system, you should populate the HP AlphaServer ES45 PCI slots as described in Table 3–3.

Table 3–3 Populating the HP AlphaServer ES45 PCI Slots

Slot	Description	Part Number	Priority
1	Fibre Channel #3	3X-KZPSA-CA	1
	SCSI Adapter #2	3X-KZPEA-DB	2
	Gigabit Ethernet #1	DEGPA-SA	3
	Fibre Channel (2Gb) #2	3X-KGPSA-DA	4
	ATM Adapter (644M) #1	3X-DAPCA-FA	4
	ATM Adapter (155M) #1	3X-DAPBA-FA	4
	ATM Adapter UTP (155M) #1	3X-DAPCA-UA	4
2	Fibre Channel #4	3X-KZPSA-CA	1
	SCSI Adapter #3	3X-KZPEA-DB	2
	Gigabit Ethernet #2	DEGPA-SA	3
	Fibre Channel (2Gb) #3	3X-KGPSA-DA	4
	ATM Adapter (644M) #2	3X-DAPCA-FA	4
	ATM Adapter (155M) #2	3X-DAPBA-FA	4
	ATM Adapter UTP (155M) #2	3X-DAPCA-UA	4

Table 3–3 Populating the HP AlphaServer ES45 PCI Slots

Slot	Description	Part Number	Priority
3	HIPPI Adapter #1	KZPHA-AX	1
	Gigabit Ethernet #3	DEGPA-SA	2
	Graphics Card #2	SN-PBXGF-AB	3
	ATM Adapter (644M) #3	3X-DAPCA-FA	4
	ATM Adapter (155M) #3	3X-DAPBA-FA	4
	ATM Adapter UTP (155M) #3	3X-DAPCA-UA	4
4	AlphaServer SC Elan #2	3X-CCNNA-AA	1
	Fibre Channel (2Gb) #1	3X-KGPSA-DA	2
5	Fibre Channel (2Gb) #4	3X-KGPSA-DA	1
	Graphics Card #1	SN-PBXGF-AB	2
	Ethernet Card #2	3X-DE602-BB	3
6	Fibre Channel #2	3X-KZPSA-CA	1
	SCSI Adapter #5	3X-KZPEA-DB	2
7	HP AlphaServer SC Elan #1	3X-CCNNA-AA	1
8	Ethernet Card #1	3X-DE602-BB	1
9	Fibre Channel #1	3X-KZPSA-CA	1
	SCSI Adapter #4	3X-KZPEA-DB	2
10	SCSI Adapter #1	3X-KZPEA-DB	2

Note:

The DE602 ethernet cards can only reside in the slots indicated if they are of the DE602-BB (66MHz) variant. If the only available ethernet cards are of the DE602-AA (33MHz) variant, then these cards must be placed in slot 3, 6, 9, or 10. This is necessary so as not to restrict usage of the other slots which are 66MHz capable.

Table 3–3 supports the following mutually exclusive possibilities as well as combinations of these cards in an HP AlphaServer SC system:

- Up to one Graphics card
- Up to two Ethernet cards
- Up to two HP AlphaServer SC Elan adapter cards in a system
- Up to two High Performance (Gigabit Ethernet, ATM, HIPPI) cards

- Up to four Fibre Channel (2Gb) cards (limit of three cards when dual rail)
- Up to four Fibre Channel (1Gb) cards
- Up to four SCSI cards

3.5.3 HP AlphaServer DS20L PCI Slots

In the two-slot HP AlphaServer DS20L system, you should populate the HP AlphaServer DS20L PCI slots as described in Table 3–4.

Table 3–4 Populating the HP AlphaServer DS20L PCI Slots

Slot	Description	Part Number	Priority
0	Fibre Channel #1	DS-KGPSA-CA	1
1	AlphaServer SC Elan #1	3X-CCNNA-AA	1

3.6 Configure Hardware for a Dual-Rail Configuration

The hardware must be configured as follows for a dual-rail configuration:

- Each node must have two HP AlphaServer SC Elan adapter cards.
- Each HP AlphaServer SC Elan adapter card must be on a different PCI bus.
- The HP AlphaServer SC Elan adapter cards must be in the same slot positions on each node.
- The HP AlphaServer SC Elan adapter cards in a given slot position must be connected to the same HP AlphaServer SC Interconnect switch.
- Both HP AlphaServer SC Elan adapter cards in a given node must be connected to the same port on the HP AlphaServer SC Interconnect switch (that is, the node must have the same network ID on each HP AlphaServer SC Interconnect switch).
- Connect the parallel port on the HP AlphaServer SC Interconnect as described in Section 3.7.
- The same type of HP AlphaServer SC Interconnect switch must be used for each rail.

3.7 Connect the HP AlphaServer SC Interconnect

Connect the HP AlphaServer SC Interconnect as follows:

1. Power down all nodes.
2. Power down the HP AlphaServer SC Interconnect switch.

3. Connect the nodes to the HP AlphaServer SC Interconnect switch. Connect Node 0 to port 0, Node 1 to port 1, and so on.
4. Connect the parallel port on the HP AlphaServer SC Interconnect switch as follows:
   a. 16-Port Switch:

      - Connect the first switch to Node 0, the second switch to Node 1, and so on.

   b. 128-Port Switch with traditional chassis (no HP AlphaServer SC Interconnect Control Card):

      - Connect the first switch to Node 0, the second switch to Node 1, and so on.

   c. 128-Port switch with HP AlphaServer SC Interconnect Control Card:

      - Connect the HP AlphaServer SC Interconnect Control Card to the parallel port on the switch chassis

      - Connect the HP AlphaServer SC Interconnect Control Card to the Ethernet

      - Repeat these two steps for each 128-Port switch.

For more information, see the *HP AlphaServer SC Interconnect Installation and Diagnostics Manual*.

3.8 Connect the Node Console Port

Connect the appropriate cable to the console port (COM 1) of each node. For example, Node 0 must be connected to port 1 of the first terminal server, Node 1 must be connected to port 2, and so on.

The management server may be connected to any port on any terminal server, but nodes must be added to consecutive ports. Therefore, HP recommends that you connect the management server to the last terminal server port. This minimizes the necessity to move the management server connection to a different terminal server port when adding nodes. Record in Appendix D the port number of the terminal server port connected to the management server.

3.9 Configure the HP AlphaServer SC Interconnect Control Card with an IP Address

Each HP AlphaServer SC Interconnect control processor is connected to the management network via an Ethernet cable. To connect to the HP AlphaServer SC Interconnect control processors over the management network, you must first assign an IP address to each HP AlphaServer SC Interconnect control processor.

For instructions on how to configure the HP AlphaServer SC Interconnect Control Card with an IP address, please refer to section 7.2.1 Using the Serial Port to Assign a Static IP Address of the *HP AlphaServer SC Interconnect Installation and Diagnostics Manual*.

3.10 Configure the Terminal Servers with an IP Address

You must configure the terminal servers by performing the following steps on each terminal server:

1. Connect a terminal to port 1 of the terminal server (that is, disconnect the port from Node 0, and connect the port to a terminal instead), so that you can configure the terminal server with an IP address.

   Note:

   On an unconfigured terminal server, you can use any port to manage the terminal server itself. However, once SRA has configured any terminal server ports (see either Section 5.2, step 10 on page 5–39 or Section 6.2, step 11 on page 6–26), the SRA-configured ports can not be used to manage the terminal server — you must use an unconfigured port.

2. Press the Return key to display the username prompt. Enter any value at this prompt.
   ```
   Username: anything
   ```
3. Enter privileged mode.
   ```
   LOCAL> SET PRIVILEGE
   ```
   The factory default password is `system`.
4. Set the subnet mask.
   ```
   LOCAL> DEFINE INTERNET SUBNET MASK 255.255.0.0
   ```

   Note:

   Set the subnet mask before you set the IP address.

5. Set the IP address.
   LOCAL> **DEFINE INTERNET ADDRESS *ip_address***

   where *ip_address* is one of the following:

   - 10.128.100.1 (first terminal server)
   - 10.128.100.2 (second terminal server)
   - 10.128.100.3 (third terminal server)
   - 10.128.100.4 (fourth terminal server)

6. Set the gateway.
   LOCAL> **DEFINE INTERNET GATEWAY *gateway_ip_address***

   where *gateway_ip_address* is 10.128.0.1 (the IP address of the first node) or in the case of a clustered management server, it is 10.128.101.1 (the IP address of the first node of the management server cluster).

7. Initialize the IP address.
   LOCAL> **INITIALIZE**

8. Disconnect the terminal from port 1 of the terminal server, and reconnect the port to Node 0.

Once you have set the terminal server IP address as described in this section, and installed the sra utility (as described in either Section 5.1.9 on page 5–32 if using a management server, or Section 6.1.7 on page 6–20 if not using a management server), you can run the sra setup command to configure port characteristics (as described in either Section 5.2 on page 5–36 if using a management server, or Section 6.2 on page 6–24 if not using a management server).

3.11 Connect the Fibre Channel Switches

Cable your storage arrays and hosts to the Fibre Channel switches for multiple-bus failover mode — see the example configuration in Figure 3–9 on page 3–28 or the example HSV110 configuration in Figure 3–11 on page 3–43.

3.12 Verify Storage Component Revisions

Table 3–5 displays the software, driver, and firmware revisions.

Table 3–5 Minimum System Driver and Firmware Versions

Product	Minimum Revision
SAN Appliance	V1.0C Build 20020108

Table 3–5 Minimum System Driver and Firmware Versions

Product	Minimum Revision
Fibre Channel Switch 2/16	`Kernel 5.3.1, Fabric OS V3.0.2a`
Emx Driver	`1.32a`
KGPSA-BC	`F/W Rev 3.03A1(1.31)`
KGPSA-CA	`F/W Rev 3.81A4(2.01A0)`
KGPSA-DA	`F/W Rev 3.81A4(1.01A0)`
HSG80	`ACS V8.7`
HSV110	`VCS V2.002`
MSA1000	`F/W Rev V3.30A`

3.13 Configure SAN Switch Network Addressing

The following items are required to set network addressing.

- An IP address from your Network Administrator
- SAN Switch 2/8 EL installed and connected to a power source
- Serial cable (supplied with the switch) for connecting the switch to the workstation
- A local workstation (desktop or notebook computer) with RS-232 serial communications software (VT100 emulation).
- Ethernet cable for connecting the switch to the workstation or to a network containing the workstation
- SFPs and cables, as required to connect the switch to the fabric

3.13.1 Setting Network Addresses *via* a Serial Connection

Verify or change the SAN Switch 2/8 EL IP address, subnetmask, or gateway address as follows:

Note:

During first time setup, you must replace the factory IP, subnetmask and gateway addresses with addresses provided by your Network Administrator.

1. Remove the shipping plug from the SAN Switch 2/8 EL serial port.

2. Connect the serial cable to the SAN Switch 2/8 EL serial port
3. Connect the other end of the serial cable to an RS-232 serial port on the workstation. If no RS-232 serial port is available on the workstation, the adapter on the end of the serial cable can be removed to use the RJ-45 connector to create a serial connection.
4. Verify that the switch power is on and POST is completed.
5. Power on the workstation and establish a connection to the switch using a terminal emulator application.

   Note:

   These steps show instructions specific to Hyperterminal. If using a different application, consult the specific application's documentation.

6. Configure the terminal emulation port settings as follows:
   - Bits per second: 9600
   - Databits: 8
   - Parity: None
   - Stop bits: 1
   - Flow control: None
   - SHR-2497A

   To configure port settings in a Tru64 UNIX environment, enter:
   ```
   tip /dev/ttyb -9600
   ```
7. Log onto the switch (with administrative privileges). The default administrative logon is *admin* and the default password is *password*.
   a. Enter the following at the prompt:

      ```
      ipAddrSet
      ```

   b. Enter the following information at the corresponding prompts, listed below:
      - Ethernet IP Address [10.77.77.77]: Enter the new ethernet IP address (see Table 2–1).
      - Ethernet subnetmask [0.0.0.0]: Enter the new ethernet subnetmask (see Table 2–1)
      - Fibre Channel IP Address [none]: Enter the new Fibre Channel IP address if desired. Select None.
      - Fibre Channel subnetmask [none]: Enter the new fibre channel subnetmask if desired. Select None.

- Gateway Address [172.17.1.1]: Enter the new gateway address (see Table 2–1). The gateway address will be `10.128.0.1` (the IP address of the first node) or in the case of a clustered management server, it will be `10.128.101.1` (the IP address of the first node of the management server cluster).
- Set IP address now? [y = set now, n = next reboot]: Enter **y** to set now.

c. To verify that the IP address was entered correctly, enter:
`ipAddrShow`

d. Once the IP address is verified as correct, remove the serial cable, and replace the shipping plug in the serial port.

Note:

The serial port is intended only for use during the initial setting of the IP address and for service purposes. Using the serial port during normal switch operation or for regular maintenance is not recommended.

---

8. Record the IP address on the label affixed to the SAN Switch 2/8 EL front panel.

3.14 Switch Zoning

If you have one RAID controller pair per domain, you can limit access to the RAID storagesets by using switch zoning. The following example shows how to create two zones on an 8-port switch:

1. Telnet to the Fibre Channel switch and log in as the `admin` user, as follows:
```
# telnet 10.128.104.1
user: admin
password: password
```
2. Create two zones on the switch, as follows:

Note:

New information on switch functionality will be supplied in later drafts.

```
admin> zoneCreate "zone_A", "1,0; 1,1; 1,4; 1,5"
admin> zoneCreate "zone_B", "1,2; 1,3; 1,6; 1,7"
admin> cfgCreate "atlas", "zone_A; zone_B"
```

This command creates Zone A (`zone_A`) with ports 0, 1, 4, and 5, and Zone B (`zone_B`) with ports 2, 3, 6, and 7. Typically, the first domain (`atlasD0`) is connected to ports 0 and 1, and its RAID is connected to ports 4 and 5. Similarly, the second domain (`atlasD1`) is connected to ports 2 and 3, and its RAID is connected to ports 6 and 7.

3. Enable the zoning configuration, as follows:
   ```
   admin> cfgEnable 'atlas'
   ```
4. Save the zoning configuration to flash memory, in case of power failure, as follows:
   ```
   admin> cfgSave
   ```

For more information about switch zoning, see the *Fibre Channel Storage Switch User's Guide*.

3.15 Configure the System Storage on the HSG80

System storage is provided by a RAID subsystem, which is connected to the first two nodes in each domain, as shown in Figure 2–1 on page 2–8. You can configure the RAID subsystem using either a command line interface (CLI) or a graphical user interface (GUI) — this section describes how to use the CLI.

The amount of external storage, and the number of file-serving nodes deployed, is site-specific. The first two nodes in each domain must have external storage capability, to serve the system storage files. As system storage requires only a small amount of space, the external storage on these nodes can also hold user data.

In the example described in this chapter, the 128-node HP AlphaServer SC system is divided into four domains — one File-Serving (FS) domain, and three Compute-Serving (CS) domains — with 32 nodes in each domain. The first two nodes in each domain have two Fibre Channel Host Bus Adapter (HBA) cards each, and the storage is configured with two HSG80 controllers.

For 1024 node systems, the system storage configuration is typically built from eight individual and independent 128-node storage blocks. Each 128-node storage block will have a separate HSG controller pair, therefore every configuration step described in this section will be repeated on each HSG pair. As you progress through the eight individual blocks, the node numbers will increase but all other settings (disks, units, identifiers) remain unchanged.

If your system has a different configuration (different number of domains, nodes, or HBA cards per node), please modify the relevant commands accordingly. Note that the number of Fibre Channel switches configured does not affect the commands in this chapter.

Note:

The FS domain must be the first domain. This approach leaves a contiguous range of nodes available for compute partitions. Contiguous nodes can take advantage of hardware broadcast on the data network.

Configure the System Storage on the HSG80

The HP AlphaServer SC system supports several Fibre Channel RAID products. For more information about system storage and supported RAID products, see Chapter 6 of the *HP AlphaServer SC System Administration Guide*.

To configure the system storage on a Fibre Channel RAID subsystem, perform the following tasks on each domain:

- Configure the HSG80 RAID Controllers (see Section 3.15.1 on page 3–29)
- Configure the HSG80 RAID Storage (see Section 3.15.2 on page 3–34)

Figure 3–9 shows the cabling in the example system storage configured in this section.

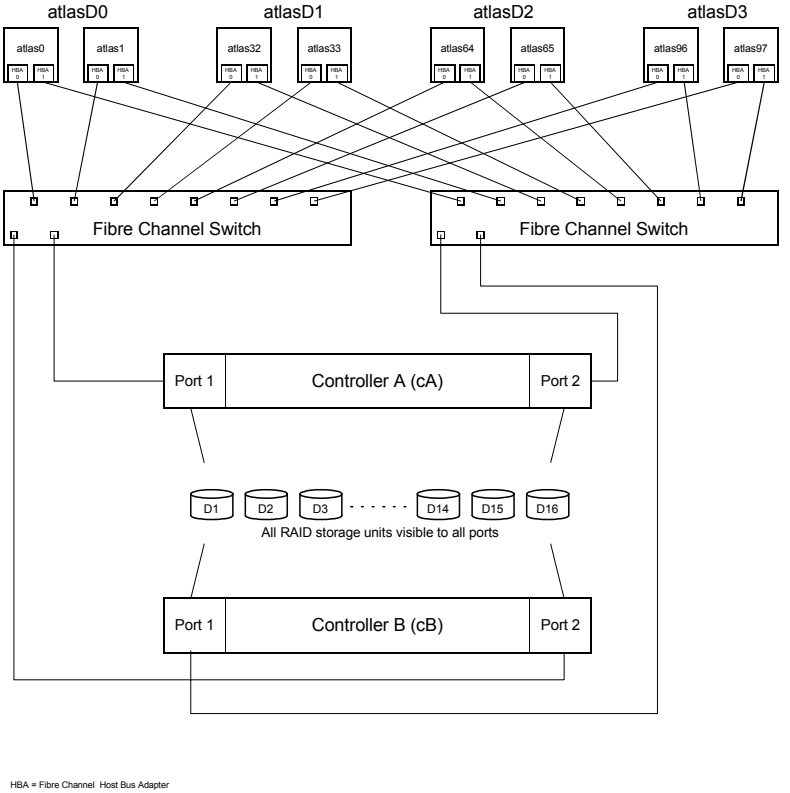

Figure 3–9 Example System Storage Configuration — Cabling

Figure 3–10 shows the RAID storage units in the example system storage configured in this section.

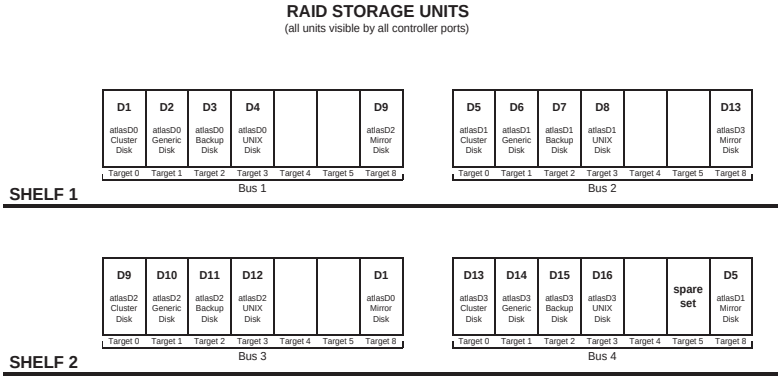

Figure 3–10 Example System Storage Configuration — RAID Storage Units

3.15.1 Configure the HSG80 RAID Controllers

The Fibre Channel RAID subsystem has two HSG80 controllers. The controller type is indicated by the CLI prompt (`HSG80>`). Configure the Fibre Channel RAID controllers as follows:

1. Connect a PC *via* serial cable to one of the HSG80 controllers (`cA`) and use a terminal emulator to issue commands to the HSG80 command line interpreter (CLI).

2. Each controller has a high-speed cache to improve performance. Each cache must be protected from power failure — this protection is normally provided by connecting the cache to an external battery backup. If you do not have a battery backup, you should connect the cache to an uninterruptible power supply (UPS).

   If using UPS instead of battery backup, enter one of the following commands when configuring the controller — see the HP *StorageWorks HSG80 Array Controller CLI Reference Guide* for more information about these commands:

   ```
   HSG80> SET THIS UPS=NODE_ONLY
   ```

   or

   ```
   HSG80> SET THIS UPS=DATACENTER_WIDE
   ```

   Note:

   Setting the UPS controller variable for one controller sets it for both controllers.

3. To ensure proper operation of the HSG80 with Tru64 UNIX and TruCluster Server, set the controller values as follows:

   a. Remove any failover mode that may have been previously configured:

```
HSG80> SET NOFAILOVER
```

b. Prevent the command line interpreter (CLI) from reporting a misconfiguration error resulting from not having a failover mode set:
```
HSG80> CLEAR CLI
```

c. Set up mirrored cache, if desired, for the controller pair:
```
HSG80> SET THIS MIRRORED_CACHE
```

d. Put the controller pair into multiple-bus failover mode. Ensure that you copy the configuration information from the controller known to have a good array configuration:
```
HSG80> SET MULTIBUS COPY=THIS
```

e. When the command is entered to set multiple-bus failover and copy the configuration information to the other controller, the other controller will restart. The restart may set off the audible alarm (which is silenced by pressing the button on the EMU). The CLI will display an event report, and continue reporting the condition until cleared with the `CLEAR CLI` command:
```
HSG80> CLEAR CLI
```

f. Take the ports off line and reset the topology to prevent an error message when setting the port topology:
```
HSG80> SET THIS PORT_1_TOPOLOGY=OFFLINE
HSG80> SET THIS PORT_2_TOPOLOGY=OFFLINE
HSG80> SET OTHER PORT_1_TOPOLOGY=OFFLINE
HSG80> SET OTHER PORT_2_TOPOLOGY=OFFLINE
```

g. Set fabric as the switch topology:
```
HSG80> SET THIS PORT_1_TOPOLOGY=FABRIC
HSG80> SET THIS PORT_2_TOPOLOGY=FABRIC
HSG80> SET OTHER PORT_1_TOPOLOGY=FABRIC
HSG80> SET OTHER PORT_2_TOPOLOGY=FABRIC
```

h. Set the date and time on this controller. In a dual-redundant configuration, the command sets the time on both controllers. The value takes effect immediately:
```
HSG80> SET THIS TIME=DD-MMM-YYYY:HH:MM:SS
```

i. Specify the host protocol to use — you can use either SCSI-2 or SCSI-3:

- Setting the SCSI_VERSION to SCSI-2 allows a disk unit to be at LUN0, and specifies that the command console LUN (CCL) is not fixed at a particular location, but floats to the first available LUN.
- If SCSI_VERSION is set to SCSI-3, the CCL is presented at LUN0 for all connection offsets. Do not assign unit 0 at any connection offset because the unit would be masked by the CCL at LUN0 and would not be available.
- Setting SCSI_VERSION to SCSI-3 is preferred because the CCL is fixed and it is much easier to manage a fixed CCL than a CCL that can change:
```
HSG80> SET THIS SCSI_VERSION=SCSI-3
HSG80> SET OTHER SCSI_VERSION=SCSI-3
```

j. The HSG80 prompts you to restart both controllers after you set the SCSI version:

```
HSG80> RESTART OTHER
HSG80> RESTART THIS
```

4. Compare the HOST_ID (WWN) reported by the console `show device` command with the connections reported by the controller `SHOW CONNECTIONS` command, as shown in the example below.

   In this example, `atlas0` has two Fibre Channel Host Bus Adapter cards (HBAs). To identify the `atlas0` connections to the HSG80 controllers, perform the following steps:

   a. Identify the WWN of each HBA (see Table 3–6), by running the `show device` command at the `atlas0` SRM console prompt:

```
P00>>> show device
pga0.0.0.2.1                PGA0        WWN 2000-0000-c921-26e7
pgb0.0.0.3.1                PGB0        WWN 2000-0000-c921-310D
```

Table 3–6 Identifying the WWN of the HBAs — HSG80

HBA	WWN
0	2000-0000-c921-26e7
1	2000-0000-c921-310D

   b. List all of the connections (from all HBAs in all nodes) to the HSG80 controllers, by running the `SHOW CONNECTIONS` command on one of the HSG80 controllers (for example, Controller A):

```
HSG80> SHOW CONNECTIONS
Connection                                  Unit
Name            Operating system            Controller      Port    Address     Status      Offset
...
!NEWCON23       TRU64_UNIX                  THIS            2       210613      OL this     0
 HOST_ID=2000-0000-C921-26e7        ADAPTER_ID=1000-0000-C921-26e7
...
!NEWCON34       TRU64_UNIX                  OTHER           1       210613      OL other    0
 HOST_ID=2000-0000-C921-26e7        ADAPTER_ID=1000-0000-C921-26e7
...
!NEWCON42       TRU64_UNIX                  OTHER           2       398576      OL other    0
 HOST_ID=2000-0000-C924-310D        ADAPTER_ID=1000-0000-C924-310D
...
!NEWCON57       TRU64_UNIX                  THIS            1       398576      OL this     0
 HOST_ID=2000-0000-C924-310D        ADAPTER_ID=1000-0000-C924-310D
...
```

c. Identify the connections from the HSG80 controllers to the `atlas0` HBAs, by finding the entries in which the HOST_IDs (step b) match the WWNs (step a), as shown in Table 3–7:

Table 3–7 Identifying the Connections from the HSG80 Controllers to atlas0

From `show devices` on `atlas0` (step a):		From `SHOW CONNECTIONS` on HSG80 (step b):		
HBA	**WWN**	**HOST_ID**	**Connection Name**	**Controller**
0	2000-0000-c921-26e7	2000-0000-c921-26e7	!NEWCON23	THIS
0	2000-0000-c921-26e7	2000-0000-c921-26e7	!NEWCON34	OTHER
1	2000-0000-c921-310D	2000-0000-c921-310D	!NEWCON42	OTHER
1	2000-0000-c921-310D	2000-0000-c921-310D	!NEWCON57	THIS

You have now identified the four connections from the HSG80 controllers to `atlas0`:

- `!NEWCON23` is the connection from Controller A to HBA 0 on `atlas0`.
- `!NEWCON34` is the connection from Controller B to HBA 0 on `atlas0`.
- `!NEWCON42` is the connection from Controller B to HBA 1 on `atlas0`.
- `!NEWCON57` is the connection from Controller A to HBA 1 on `atlas0`.

5. Create a naming convention for the connections, to give them meaningful names. Ensure that your naming convention allows you to add multiple connections to a node at a later date, and to identify the HBA (in the node) to which the controllers are connected. Note that the maximum length of the connection name is nine characters.

   The convention used in this example is N<*node#*>-<*adapter#*>-<*connection#*>

   where

   - *node#* is the node number (four-digits, left-pad with zeros as necessary)
   - *adapter#* is **0** for HBA 0, and **1** for HBA 1
   - *connection#* is **0** for this controller, and **1** for other controller

6. Rename the connections using the `rename` command.

   For example, to rename the connections identified in step 4, enter the following commands:

```
HSG80> RENAME !NEWCON23 N0000-0-0
HSG80> RENAME !NEWCON34 N0000-0-1
HSG80> RENAME !NEWCON42 N0000-1-1
HSG80> RENAME !NEWCON57 N0000-1-0
```

Repeat the `rename` command for each node connected, as shown in Table 3–8.

Table 3–8 Renaming the Connections — HSG80

Domain	Node	HBA	Controller	Connection Name
atlasD0	0	0	THIS	**N0000-0-0**
	0	0	OTHER	**N0000-0-1**
	0	1	THIS	**N0000-1-0**
	0	1	OTHER	**N0000-1-1**
	1	0	THIS	**N0001-0-0**
	1	0	OTHER	**N0001-0-1**
	1	1	THIS	**N0001-1-0**
	1	1	OTHER	**N0001-1-1**
atlasD1	32	0	THIS	**N0032-0-0**
	32	0	OTHER	**N0032-0-1**
	32	1	THIS	**N0032-1-0**
	32	1	OTHER	**N0032-1-1**
	33	0	THIS	**N0033-0-0**
	33	0	OTHER	**N0033-0-1**
	33	1	THIS	**N0033-1-0**
	33	1	OTHER	**N0033-1-1**
atlasD2	64	0	THIS	**N0064-0-0**
	64	0	OTHER	**N0064-0-1**
	64	1	THIS	**N0064-1-0**
	64	1	OTHER	**N0064-1-1**
	65	0	THIS	**N0065-0-0**
	65	0	OTHER	**N0065-0-1**
	65	1	THIS	**N0065-1-0**
	65	1	OTHER	**N0065-1-1**
atlasD3	96	0	THIS	**N0096-0-0**
	96	0	OTHER	**N0096-0-1**
	96	1	THIS	**N0096-1-0**
	96	1	OTHER	**N0096-1-1**
	97	0	THIS	**N0097-0-0**
	97	0	OTHER	**N0097-0-1**
	97	1	THIS	**N0097-1-0**
	97	1	OTHER	**N0097-1-1**

7. For each connection to your domain, verify that the operating system is TRU64_UNIX and the unit offset is 0. Search the `SHOW CONNECTION` display for the worldwide name of each of the KGPSA adapters in your domain member systems. If the operating system and offsets are incorrect, set them, then restart both controllers as follows:

a. Set the relative offset for LUN numbering to 0. You can set the `unit_offset` to nonzero values, but use caution. You may not be able to access storage units if you set the `unit_offset` improperly:
```
HSG80> SET N0000-0-0 UNIT_OFFSET=0
```
Repeat this command for each connection listed in Table 3–8.

b. Specify that the host environment that is connected to the Fibre Channel port is TRU64_UNIX, as follows:
```
HSG80> SET N0000-0-0 OPERATING_SYSTEM=TRU64_UNIX
```
You must change each connection to TRU64_UNIX. This is **very** important.

Caution:

Failure to set this to TRU64_UNIX will prevent your system from booting correctly, recovering from run-time errors, or from booting at all. The default operating system is Windows NT, which uses a different SCSI dialect to talk to the HSG80 controller.

Repeat this command for each connection listed in Table 3–8.

c. Restart both controllers to cause all changes to take effect:
```
HSG80> RESTART OTHER
HSG80> RESTART THIS
```

d. Enter the `SHOW CONNECTIONS` command once more and verify that all connections have the offsets set to 0 and the operating system is set to TRU64_UNIX:
```
HSG80> SHOW CONNECTIONS
```

You have now configured both RAID controllers. For a complete description of all of the capabilities of HSG80 RAID controllers, see the HP *StorageWorks HSG80 Array Controller CLI Reference Guide*.

3.15.2 Configure the HSG80 RAID Storage

In the example in this section:

- Each domain has a Mirrorset and two individual disks.
- There is an additional disk, which is added as a spareset.

Configure the RAID disks as follows:

1. Using the CLI, run the configuration script to find the new disks in the array and add them, as follows:
```
HSG80> RUN CONFIG
```
The `RUN CONFIG` command produces the following output:

```
Config Local Program Invoked

Config is building its tables and determining what devices exist
on the subsystem. Please be patient.
ADD DISK DISK10000 1 0 0
ADD DISK DISK10100 1 1 0
ADD DISK DISK10200 1 2 0
ADD DISK DISK10300 1 3 0 [SC20 Product]
ADD DISK DISK10800 1 8 0
ADD DISK DISK20000 2 0 0
ADD DISK DISK20100 2 1 0
ADD DISK DISK20200 2 2 0
ADD DISK DISK20300 2 3 0 [SC20 Product]
ADD DISK DISK20800 2 8 0
ADD DISK DISK30000 3 0 0
ADD DISK DISK30100 3 1 0
ADD DISK DISK30200 3 2 0
ADD DISK DISK30300 3 3 0 [SC20 Product]
ADD DISK DISK30800 3 8 0
ADD DISK DISK40000 4 0 0
ADD DISK DISK40100 4 1 0
ADD DISK DISK40200 4 2 0
ADD DISK DISK40300 4 3 0 [SC20 Product]
ADD DISK DISK40500 4 5 0
ADD DISK DISK40800 4 8 0
```

The format of the `ADD DISK` command is as follows:

`ADD DISK DISK`*x*`0`*y*`0`*z* *x y z*

where

- *x* is the SCSI device port number, from 1 to 6, on which the disk resides.
- *y* is the SCSI target ID, from 0 to 15 (excluding 6 and 7), of the disk on the port (values 6 and 7 are reserved for use by controllers `cA` and `cB` respectively).
- *z* is the LUN of the disk drive, and is always zero.

Note:

You can also add disks individually by entering the appropriate `ADD DISK` commands at the CLI prompt.

2. Create the Mirrorset-type storagesets, as shown in Table 3–9.

Table 3–9 Creating the Mirrorsets

Domain	Command
atlasD0	HSG80> **ADD MIRROR MIRRORD0 DISK10000 DISK30800**
atlasD1	HSG80> **ADD MIRROR MIRRORD1 DISK20000 DISK40800**

Table 3–9 Creating the Mirrorsets

Domain	Command
atlasD2	HSG80> **ADD MIRROR MIRRORD2 DISK30000 DISK10800**
atlasD3	HSG80> **ADD MIRROR MIRRORD3 DISK40000 DISK20800**

3. Create a spareset for the RAID subsystems, in case any of the other disks fails:
   HSG80> **ADD SPARESET DISK40500**
4. Initialize the storagesets (Mirrorsets, JBOD, and spareset), as shown in Table 3–10.

Table 3–10 Initializing the Storagesets — HSG80

Domain	Command
atlasD0	HSG80> **INITIALIZE MIRRORD0**
	HSG80> **INITIALIZE DISK10100**
	HSG80> **INITIALIZE DISK10200**
[SC20 Only]	*HSG80> **INITIALIZE DISK10300***
atlasD1	HSG80> **INITIALIZE MIRRORD1**
	HSG80> **INITIALIZE DISK20100**
	HSG80> **INITIALIZE DISK20200**
[SC20 Only]	*HSG80> **INITIALIZE DISK20300***
atlasD2	HSG80> **INITIALIZE MIRRORD2**
	HSG80> **INITIALIZE DISK30100**
	HSG80> **INITIALIZE DISK30200**
[SC20 Only]	*HSG80> **INITIALIZE DISK30300***
atlasD3	HSG80> **INITIALIZE MIRRORD3**
	HSG80> **INITIALIZE DISK40100**
	HSG80> **INITIALIZE DISK40200**
[SC20 Only]	*HSG80> **INITIALIZE DISK40300***

You have now created four Mirrorset storagesets, each with a usable capacity equivalent to an individual disk.

5. Create the virtual disks and introduce them as storage units, as shown in Table 3–11.

Table 3–11 Introducing the Storage Units (Virtual Disks) — HSG80

Domain	Command	UNIX Partition
atlasD0	HSG80> **ADD UNIT D1 MIRRORD0 PREFERRED_PATH=THIS**	/, /usr, /var
	HSG80> **ADD UNIT D2 DISK10100 PREFERRED_PATH=THIS**	generic boot
	HSG80> **ADD UNIT D3 DISK10200 PREFERRED_PATH=THIS**	backup/upgrade
[SC20 Only]	*HSG80>* ***ADD UNIT D4 DISK10300 PREFERRED_PATH=THIS***	*Tru64*
atlasD1	HSG80> **ADD UNIT D5 MIRRORD1 PREFERRED_PATH=OTHER**	/, /usr, /var
	HSG80> **ADD UNIT D6 DISK20100 PREFERRED_PATH=OTHER**	generic boot
	HSG80> **ADD UNIT D7 DISK20200 PREFERRED_PATH=OTHER**	backup/upgrade
[SC20 Only]	*HSG80>* ***ADD UNIT D8 DISK20300 PREFERRED_PATH=OTHER***	*Tru64*
atlasD2	HSG80> **ADD UNIT D9 MIRRORD2 PREFERRED_PATH=THIS**	/, /usr, /var
	HSG80> **ADD UNIT D10 DISK30100 PREFERRED_PATH=THIS**	generic boot
	HSG80> **ADD UNIT D11 DISK30200 PREFERRED_PATH=THIS**	backup/upgrade
[SC20 Only]	*HSG80>* ***ADD UNIT D12 DISK30300 PREFERRED_PATH=THIS***	*Tru64*
atlasD3	HSG80> **ADD UNIT D13 MIRRORD3 PREFERRED_PATH=OTHER**	/, /usr, /var
	HSG80> **ADD UNIT D14 DISK40100 PREFERRED_PATH=OTHER**	generic boot
	HSG80> **ADD UNIT D15 DISK40200 PREFERRED_PATH=OTHER**	backup/upgrade
[SC20 Only]	*HSG80>* ***ADD UNIT D16 DISK40300 PREFERRED_PATH=OTHER***	*Tru64*

6. Set the IDENTIFIER label on the storage units, as shown in Table 3–12. This label simplifies the task of identifying disks when using the `hwmgr -v -d` command.

Table 3–12 Setting the Identifiers — HSG80

Domain	Command
atlasD0	HSG80> **SET D1 IDENTIFIER=1**
	HSG80> **SET D2 IDENTIFIER=2**

Table 3–12 Setting the Identifiers — HSG80

Domain	Command
	HSG80> **SET D3 IDENTIFIER=3**
[SC20 Only]	*HSG80>* ***SET D4 IDENTIFIER=4***
atlasD1	HSG80> **SET D5 IDENTIFIER=1**
	HSG80> **SET D6 IDENTIFIER=2**
	HSG80> **SET D7 IDENTIFIER=3**
[SC20 Only]	*HSG80>* ***SET D8 IDENTIFIER=4***
atlasD2	HSG80> **SET D9 IDENTIFIER=1**
	HSG80> **SET D10 IDENTIFIER=2**
	HSG80> **SET D11 IDENTIFIER=3**
[SC20 Only]	*HSG80>* ***SET D12 IDENTIFIER=4***
atlasD3	HSG80> **SET D13 IDENTIFIER=1**
	HSG80> **SET D14 IDENTIFIER=2**
	HSG80> **SET D15 IDENTIFIER=3**
[SC20 Only]	*HSG80>* ***SET D16 IDENTIFIER=4***

7. You must ensure that disks intended for use by a domain are visible only by that domain. Therefore, you should limit access to the storage units, as follows:

   a. Disable access to all units, as shown in Table 3–13.

Table 3–13 Disabling Access to the Units

Domain	Command
atlasD0	HSG80> **SET D1 DISABLE_ACCESS_PATH=ALL**
	HSG80> **SET D2 DISABLE_ACCESS_PATH=ALL**
	HSG80> **SET D3 DISABLE_ACCESS_PATH=ALL**
[SC20 Only]	*HSG80>* ***SET D4 DISABLE_ACCESS_PATH=ALL***
atlasD1	HSG80> **SET D5 DISABLE_ACCESS_PATH=ALL**

Table 3–13 Disabling Access to the Units

Domain	Command
	HSG80> **SET D6 DISABLE_ACCESS_PATH=ALL**
	HSG80> **SET D7 DISABLE_ACCESS_PATH=ALL**
[SC20 Only]	*HSG80>* ***SET D8 DISABLE_ACCESS_PATH=ALL***
atlasD2	HSG80> **SET D9 DISABLE_ACCESS_PATH=ALL**
	HSG80> **SET D10 DISABLE_ACCESS_PATH=ALL**
	HSG80> **SET D11 DISABLE_ACCESS_PATH=ALL**
[SC20 Only]	*HSG80>* ***SET D12 DISABLE_ACCESS_PATH=ALL***
atlasD3	HSG80> **SET D13 DISABLE_ACCESS_PATH=ALL**
	HSG80> **SET D14 DISABLE_ACCESS_PATH=ALL**
	HSG80> **SET D15 DISABLE_ACCESS_PATH=ALL**
[SC20 Only]	*HSG80>* ***SET D16 DISABLE_ACCESS_PATH=ALL***

b. Enable access for nodes that are connected to the storage, as shown in Table 3–14.

Table 3–14 Enabling Access to the Units for Connected Nodes — HSG80

Domain	Command
atlasD0	HSG80> **SET D1 ENABLE_ACCESS_PATH=(N0000-0-0,N0000-0-1,N0000-1-0,N0000-1-1)**
	HSG80> **SET D1 ENABLE_ACCESS_PATH=(N0001-0-0,N0001-0-1,N0001-1-0,N0001-1-1)**
	HSG80> **SET D2 ENABLE_ACCESS_PATH=(N0000-0-0,N0000-0-1,N0000-1-0,N0000-1-1)**
	HSG80> **SET D2 ENABLE_ACCESS_PATH=(N0001-0-0,N0001-0-1,N0001-1-0,N0001-1-1)**
	HSG80> **SET D3 ENABLE_ACCESS_PATH=(N0000-0-0,N0000-0-1,N0000-1-0,N0000-1-1)**
	HSG80> **SET D3 ENABLE_ACCESS_PATH=(N0001-0-0,N0001-0-1,N0001-1-0,N0001-1-1)**
[sc20][1]	*HSG80>* ***SET D4 ENABLE_ACCESS_PATH=(N0000-0-0,N0000-0-1,N0000-1-0,N0000-1-1)***
atlasD1	HSG80> **SET D5 ENABLE_ACCESS_PATH=(N0032-0-0,N0032-0-1,N0032-1-0,N0032-1-1)**
	HSG80> **SET D5 ENABLE_ACCESS_PATH=(N0033-0-0,N0033-0-1,N0033-1-0,N0033-1-1)**
	HSG80> **SET D6 ENABLE_ACCESS_PATH=(N0032-0-0,N0032-0-1,N0032-1-0,N0032-1-1)**
	HSG80> **SET D6 ENABLE_ACCESS_PATH=(N0033-0-0,N0033-0-1,N0033-1-0,N0033-1-1)**

Table 3–14 Enabling Access to the Units for Connected Nodes — HSG80

Domain	Command
	HSG80> **SET D7 ENABLE_ACCESS_PATH=(N0032-0-0,N0032-0-1,N0032-1-0,N0032-1-1)**
	HSG80> **SET D7 ENABLE_ACCESS_PATH=(N0033-0-0,N0033-0-1,N0033-1-0,N0033-1-1)**
[sc20][1]	*HSG80> **SET D8 ENABLE_ACCESS_PATH=(N0032-0-0,N0032-0-1,N0032-1-0,N0032-1-1)***
atlasD2	HSG80> **SET D9 ENABLE_ACCESS_PATH=(N0064-0-0,N0064-0-1,N0064-1-0,N0064-1-1)**
	HSG80> **SET D9 ENABLE_ACCESS_PATH=(N0065-0-0,N0065-0-1,N0065-1-0,N0065-1-1)**
	HSG80> **SET D10 ENABLE_ACCESS_PATH=(N0064-0-0,N0064-0-1,N0064-1-0,N0064-1-1)**
	HSG80> **SET D10 ENABLE_ACCESS_PATH=(N0065-0-0,N0065-0-1,N0065-1-0,N0065-1-1)**
	HSG80> **SET D11 ENABLE_ACCESS_PATH=(N0064-0-0,N0064-0-1,N0064-1-0,N0064-1-1)**
	HSG80> **SET D11 ENABLE_ACCESS_PATH=(N0065-0-0,N0065-0-1,N0065-1-0,N0065-1-1)**
[sc20][1]	*HSG80> **SET D12 ENABLE_ACCESS_PATH=(N0064-0-0,N0064-0-1,N0064-1-0,N0064-1-1)***
atlasD3	HSG80> **SET D13 ENABLE_ACCESS_PATH=(N0096-0-0,N0096-0-1,N0096-1-0,N0096-1-1)**
	HSG80> **SET D13 ENABLE_ACCESS_PATH=(N0097-0-0,N0097-0-1,N0097-1-0,N0097-1-1)**
	HSG80> **SET D14 ENABLE_ACCESS_PATH=(N0096-0-0,N0096-0-1,N0096-1-0,N0096-1-1)**
	HSG80> **SET D14 ENABLE_ACCESS_PATH=(N0097-0-0,N0097-0-1,N0097-1-0,N0097-1-1)**
	HSG80> **SET D15 ENABLE_ACCESS_PATH=(N0096-0-0,N0096-0-1,N0096-1-0,N0096-1-1)**
	HSG80> **SET D15 ENABLE_ACCESS_PATH=(N0097-0-0,N0097-0-1,N0097-1-0,N0097-1-1)**
[sc20][1]	*HSG80> **SET D16 ENABLE_ACCESS_PATH=(N0096-0-0,N0096-0-1,N0096-1-0,N0096-1-1)***

[1]*Note only the first node of the domain has an access path to Tru64UNIX.*

Note:

If replacing a component (for example, a host adapter) or reseating a cable, you must update the access path as new connections will be created.

Table 3–15 on page 3–41 describes how these virtual disks are used.

Table 3–15 Allocating RAID Storagesets

Virtual Disk Identifier	UNIX Name[1]	Partition	Recommended Size (GB)[2]	Domain File System
IDENTIFIER=1	dsk3b	b	2	/
IDENTIFIER=1	dsk3g	g	18	/usr
IDENTIFIER=1	dsk3h	h	16	/var
IDENTIFIER=2	dsk4c	c	36	generic boot[3]
IDENTIFIER=3	dsk5b	b	2	backup /[4]
IDENTIFIER=3	dsk5g	g	18	backup /usr[4]
IDENTIFIER=3	dsk5h	h	16	backup /var[4]

[1] This UNIX naming convention applies if the ES40 or ES45 nodes are configured as specified; that is, three internal disks on the first node and two internal disks on the second node. For the DS20L product, the naming convention will be different

[2] The size has been rounded to the nearest gigabyte.

[3] /cluster/admin/generic_boot_partition — used when adding domain members.

[4] The backup disks are used during the upgrade process.

Note:

The identifier (IDENTIFIER=1) rather than the UNIX disk device name (dsk3) is used by the automatic installation process to identify the disks on the RAID (cluster disk, generic boot disk, and backup cluster disk).

Note:

For HP AlphaServer DS20L, the usage of disk IDENTIFIER=4 is documented in Table 6–3.

3.16 Configure the System Storage on the HSV110

This section describes how to configure system storage on the EVA storage subsystem and contains the following sections:

- HSV110 Array Controller Storage (see Section 3.16.1 on page 3–42)

Note:

Refer to Configure SAN Switch Network Addressing (see Section 3.13 on page 3–24) and Switch Zoning (see Section 3.14 on page 3–26) for detail on these procedures.

- Configure the HSV110 RAID Controllers (see Section 3.16.2 on page 3–45)

3.16.1 HSV110 Array Controller Storage

For more detail on the HSV110 Array Controller, refer to the Enterprise Virtual Array Documentation. The documentation that supports the Enterprise Virtual Array is listed in the *HP SANWorks Release Notes - Tru64 UNIX Kit V1.0 for Enterprise Virtual Array.*

The Enterprise Virtual Array catalog of Associated Documentation is at the following location:
<http://www.compaq.com/products/storageworks/enterprise/documentation.html>

Refer to this location for a comprehensive list of Enterprise Virtual Array documentation.

Figure 3–11 shows a block diagram of storage system's connections. The HSV controller pair connects to two Fibre Channel fabrics, to which the hosts also connect.

The HSV Element Manager is the software that controls the storage system. It resides on the Management Appliance. The Management Appliance connects into the fabric.

The controller pair connects to the physical disk array through Fibre Channel arbitrated loops. There are two separate loop pairs: loop pair 1 and loop pair 2. Each loop pair consists of 2 loops, each of which runs independently, but which can take over for the other loop in case of failure.

You should check system firmware as described in Section 3.12.

- Licenses (see Section 3.16.1.1 on page 3–44)
- The HSV Element Manager (see Section 3.16.1.2 on page 3–44)
- SANWorks Scripting Utility (see Section 3.16.1.3 on page 3–44)

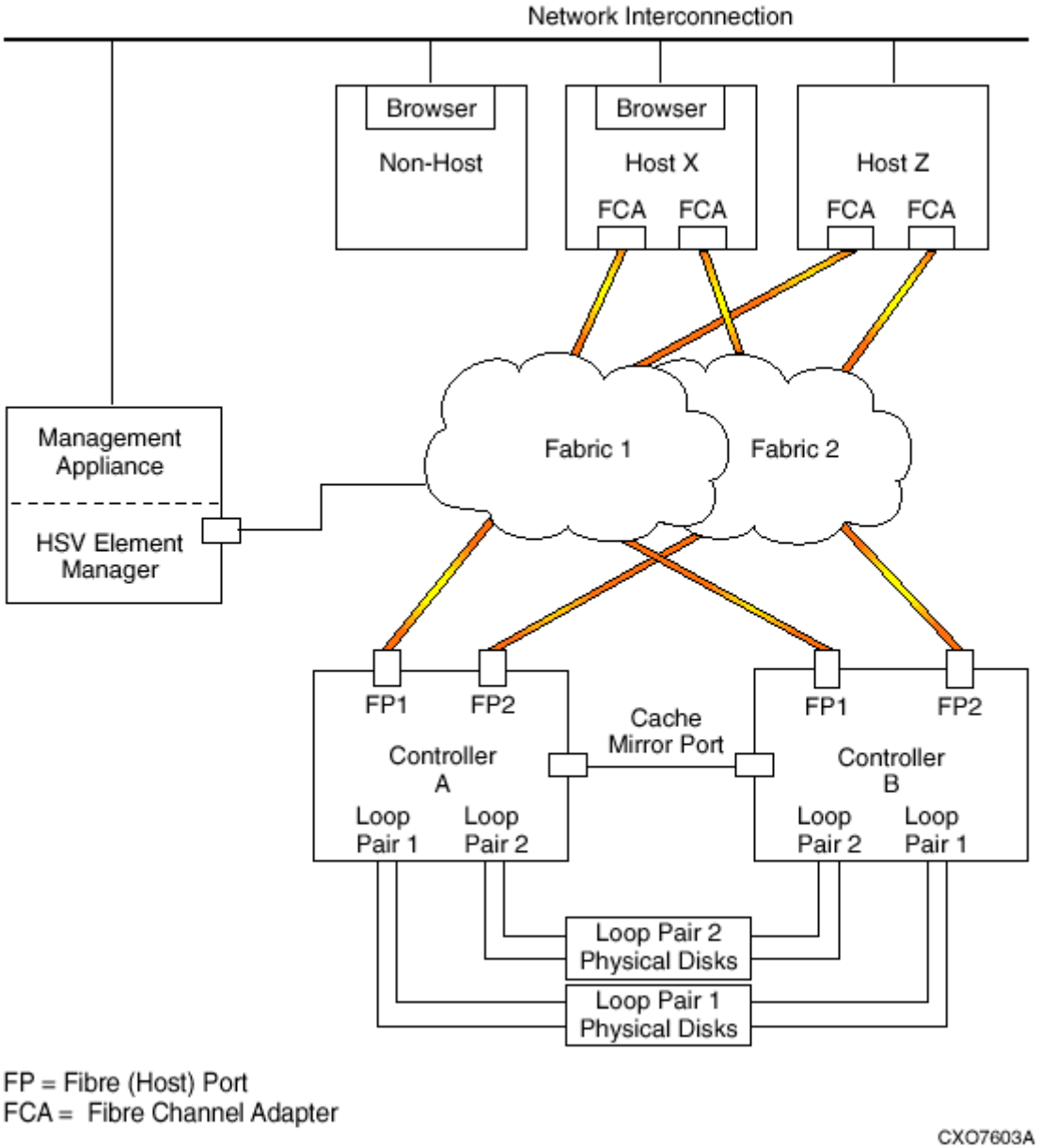

Figure 3–11 Block Diagram of Storage System's Connections

3.16.1.1 Licenses

The HSV110 Controllers use Compaq SANWorks Virtual Controller Software (VCS) Package V2.002 and Compaq SANworks VCS Snapshot V2.002. They are licensed products. The VCS software kits contain a license authorization key which is used in conjunction with the controllers' World Wide Name (WWN) to generate a license key.

The license keys enable the use of VCS software and the value-added Snapshot functionality on a dual-controller basis. Snapshot for VCS requires, as a pre-requisite, VCS Software and is licensed by the capacity attached to the dual controllers. After the storage configuration is initialized, the license is associated with the WWN and will persist if the controllers are replaced.

To enable licensing, the License Authorization Key from the VCS Software Kit and the VCS Snapshot Software Kit, and the WWN from the Enterprise Storage System WWN label are required. The customer may request a license key by visiting the licensing fulfillment website or using the manual methods outlined on the License Authorization Key Instruction Sheet.

Using the manual method, you will receive your license key in one to 48 hours. The key will be returned to you *via* e-mail.

3.16.1.2 The HSV Element Manager

An Enterprise Storage System is monitored and managed centrally through the HSV Element Manager, a user-friendly graphical user interface (GUI). The element manager is installed on an HP SANworks Management Appliance that is attached to the fabric on which the hosts and the storage system reside. The element manager's client is a standard web browser. The element manager uses the paradigm of folders to organize the various storage system components.

3.16.1.3 SANWorks Scripting Utility

The SANWorks scripting utility is available from the Enterprise Platform Kit. Verify that the utility is installed in `/usr/lbin` and ensure that it has execute permissions.

The Scripting Utility V1.0 for Enterprise Virtual Array is a command line application that allows you to configure and control HSV controllers.

The Scripting Utility is a client of a client/server application. The Scripting Utility's server accepts commands from a client—the Scripting Utility. These commands are sent across a network to the HSV Element Manager. The Scripting Utility is also known as the Storage System Scripting Utility (SSSU).

Scripting utilities and SSSU script examples are also provided in the *HP AlphaServer SC System Software CD-ROM*. See Section 3.16.2.5 for details on these script examples.

3.16.2 Configure the HSV110 RAID Controllers

To configure the HSV110 RAID controllers, do the following:

- Locate the Example EVA Configuration Scripts (see Section 3.16.2.1 on page 3–45)
- Calculate the Minimal Storage Requirement (see Section 3.16.2.2 on page 3–46)
- Create Virtual Disk Units for the Management Cluster (see Section 3.16.2.3 on page 3–49)
- Edit the Configuration Script (see Section 3.16.2.4 on page 3–52)
- Run the Configuration Script (see Section 3.16.2.5 on page 3–58)

If you are going to install a clustered management server and you do not have any other Tru64 UNIX system available in the same network as your EVA Storage System, it will be necessary to initialize the EVA Storage System through the SAN Appliance Element Manager browser and to create the minimal entities to allow performing the initial Tru64 installation for the clustered management server. This is described in Section 3.16.2.3.

3.16.2.1 Locate the Example EVA Configuration Scripts

Perform the following steps to get EVA configuration script examples for HP AlphaServer SC:

1. Insert the *HP AlphaServer SC System Software* CD-ROM in the disk drive.
2. Create a mount point for the CD-ROM, by running the following commands:
   ```
   # mkdir /cdrom
   ```
3. Mount the CD-ROM as follows:
   ```
   # mount -r /dev/disk/cdrom0c /cdrom
   ```
4. Change to the directory where EVA scripting tools for Tru64 UNIX are located:
   ```
   # cd /cdrom/Examples/eva_tools
   ```
5. List the files as follows:
   ```
   # ls -1
   1domain-nomgt.txt
   1domain-mgt.txt
   4domains-nomgt.txt
   4domains-mgt.txt
   ```

Note:

To configure the EVA through the Tru64 SSSU, you need to have completed the management server installation to the point where you have patched the management server. Otherwise, you can elect to use another external Tru64 UNIX system available in the same network as your Enterprise Virtual Array Storage System.

3.16.2.2 Calculate the Minimal Storage Requirement

As explained in Plan the HSV110 RAID Configuration (see Section 2.4.4.2 on page 2–13), there may be situations where it is advisable to separate virtual disks in different disk groups.

In such cases:

- Use the default disk group for holding system storage
- Table 3–16, Table 3–17, Table 3–18, Table 3–19 provide minimal storage allocation needs for a given number of domains, with and without clustered management server. Table 3–20 shows the available VRAID1 storage space for a given number of disks.
- Match your storage space needs with information provided in Table 3–20 to determine the size of the default disk group.
- Refer to Plan the HSV110 RAID Configuration (see Section 2.4.4.2 on page 2–13) for additional information about disk group considerations.

Table 3–16 Storage Requirements for a Single HP AlphaServer SC domain

Disk	Required Space [GB]
CFS disk	16
Backup / Upgrade disk	16
Generic Boot	1
Tru64 installation [SC20 only]	*16*
Total SC45	33
Total SC20	*49*

Table 3–17 displays the storage management requirement for a management cluster.

Table 3–17 Storage Requirement for the Management Cluster

Disk	Required Space [GB]
CFS disk	16
Quorum disk	2
Tru64 installation disk	16
Node 0 boot disk	2
Node 1 boot disk	2
Total	38

Table 3–18 displays the SC45 minimal storage requirements.

Table 3–18 SC45 Minimal Storage Requirements

Number of domains	Without management server required space [GB]	With management server required space [GB]
1	33	71
2	66	104
3	99	137
4	132	170
5	165	203

Table 3–19 displays the SC20 minimal storage requirements.

Table 3–19 SC20 Minimal Storage Requirements

Number of domains	Without management server required space [GB]	With management server required space [GB]
1	49	87
2	98	136
3	147	185
4	196	234

Table 3–19 SC20 Minimal Storage Requirements

Number of domains	Without management server required space [GB]	With management server required space [GB]
5	245	283

Table 3–20 displays the disk group virtual RAID1 space per number of disks.

Table 3–20 Disk Group Virtual RAID1 Available Space per Number of Disks

Number of Disks [36 GB]	Available VR1 Space with Sparing Level 1 [GB]	Available VR1 Space with Sparing Level 2 [GB]
8	101	67
10	135	101
12	168	134
14	202	168
16	236	203
18	269	236
20	302	269
22	337	303

Table 3–21 summarizes the allocation of disks on the HSV110.

Table 3–21 Summary Allocation of Disks on the HSV110

Number of Domains	Total Number of 36GB disks with Sparing Level 2	Total Number of 36GB disks with Sparing Level 1	Total Number of 72GB disks with Sparing Level 1 or Level 2	Total Number of 146GB disks with Sparing Level 1 or Level 2
1	10	8	8	8
2	12	10	8	8
3	14	12	8	8
4	16	14	8	8
5	16	16	8	8

3.16.2.3 Create Virtual Disk Units for the Management Cluster

In a clustered management server all the disks are based on the EVA storage system. This has the following consequences:

- The initial Tru64 UNIX system for the clustered management server cannot be installed before configuring the EVA storage system
- If no other Tru64 UNIX systems are available in the same network, a minimal EVA configuration must be performed through the SAN Appliance Element Manager browser. This minimal configuration is required to perform the initial Tru64 UNIX system installation for the clustered management server

  To complete the EVA storage system configuration, run SSSU scripts as described in Section 3.16.2.4 and Section 3.16.2.5.

  Section 3.16.2.3.1 describes minimal steps to configure the EVA storage system through the SAN Appliance Element Manager browser.

  Section 3.16.2.3.2 gives a SSSU script example to complete the storage configuration for the clustered management server.

3.16.2.3.1 Initialize the EVA Storage System through the Element Manager

Perform the following steps in order to configure the minimal storage needs for the initial Tru64 UNIX installation on the clustered management server:

Cell Initialization

To initialize the cell, do the following:

1. Log into the SAN Management Appliance
2. In the Navigation pane, select the Element Manager, HSV Element Manager option
3. Click on the Launch button
4. In the Navigation pane, select the Uninitialized Storage System option
5. Click on the Inititalize button

   Enter the cell name (`atlas` in the example) and the number of disks composing the default disk group
6. Click on the Advanced Options button

   The next steps allow you to optionally set the date format, the disk failure protection level (0, single or double), and enter a comment.
7. When completed, click on the Finish button and wait until completed.

   The `atlas` cell is displayed now in the Navigation pane.

Management Server Cluster Host Definition

To define the management server cluster host, do the following:

1. In the Navigation pane, select the `atlas` cell
2. In the Navigation pane, select the `hosts` option
3. Click on the Create Folder button
4. Enter the folder name (SC in the example) and click on the Finish button
5. Click on the Create Host button
6. Enter the host name for the management cluster (`atlasms` in the example)

Note:

The management cluster host represents the full cluster, not a single node.

7. Click on the Next Step button

   The Add Host window displays a list of adapter port World Wide names.

8. Select a World Wide name from the list, by comparing it with the SRM output from node 0 and node 1 of the clustered management server:

```
P00 >>> show device pg*

pga0.0.0.2.1PGA0              WWN 2000-0000-c92c-1c32
pgb0.0.0.3.1PGB0              WWN 2000-0000-c92c-1b05
```

Note:

When matching SRM output and Element Manager WWID information, please note that the SRM output displays the WW node name, where the leftmost character is 2. The Element Manager displays a menu of WW port names, where the leftmost character is 1.

9. Select the Tru64 UNIX operating system type for the host
10. Click on the Finish button
11. In the Navigation pane, select the created host, and click on the Add Port button
12. Add the remaining World Wide names to complete the host definition.

Tru64 Disk Unit Creation

To create the Tru64 UNIX disk unit. do the following:

1. On the Navigation pane, click on Virtual Disks
2. Click on the Create Folder button
3. Enter the folder name (SC in the example) and click on the Finish button
4. Click on Create Virtual Disk Family button
5. Create a virtual disk with the following characteristics
   - Name: `cfsms_Tru64`
   - Redundancy: `VRAID1`
   - Write cache policy: `mirrored write-back` (default)
   - Read cache policy: `on`
   - OS unit ID: `3` (for this example)
   - Present to host: `atlasms`
   - Preferred path mode: `No preference`
6. Click on the Finish button

The EVA storage system is ready for the initial Tru64 UNIX system installation. Once the initial Tru64 UNIX installation is done, the SSSU utility can be used to complete the EVA storage system configuration as described in Section 3.16.2.4

3.16.2.3.2 SSSU Script for the Clustered Management Server

For those systems with a clustered management server with shared storage on EVA, then Example 3–1 provides a suitable configuration script for creating the remaining virtual disk units for the clustered management server. This should be included in the script that will be created during Section 3.16.2.4. The amalgamated configuration script will be used to complete the configuration of the EVA in Section 3.16.2.5.

Example 3–1 Configuration Script Commands for the Clustered Management Server

```
!ADD HOST "\Hosts\SC\atlasms"   WORLD_WIDE_NAME="1000-0000-c92c-1c32"
OPERATING_SYSTEM=TRU64
!SET HOST "\Hosts\SC\atlasms"   ADD_WORLD_WIDE_NAME="1000-0000-c92c-1b05"
ADD STORAGE "\Virtual Disks\SC\cfsms"   SIZE=16 REDUNDANCY=VRAID1 GROUP="\Disk
Groups\Default Disk Group" OS_UNIT_ID=1 NOPREFERRED_PATH
ADD STORAGE "\Virtual Disks\SC\cfsms_quorum"   SIZE=2 REDUNDANCY=VRAID1
GROUP="\Disk Groups\Default Disk Group" OS_UNIT_ID=2 NOPREFERRED_PATH
!ADD STORAGE "\Virtual Disks\SC\cfsms_Tru64"   SIZE=16 REDUNDANCY=VRAID1
GROUP="\Disk Groups\Default Disk Group" OS_UNIT_ID=3 NOPREFERRED_PATH
ADD STORAGE "\Virtual Disks\SC\cfsms_bootdisk1"   SIZE=2 REDUNDANCY=VRAID1
GROUP="\Disk Groups\Default Disk Group"  OS_UNIT_ID=4 NOPREFERRED_PATH
ADD STORAGE "\Virtual Disks\SC\cfsms_bootdisk2"   SIZE=2 REDUNDANCY=VRAID1
GROUP="\Disk Groups\Default Disk Group" OS_UNIT_ID=5 NOPREFERRED_PATH
```

```
 ADD LUN 91    HOST="\Hosts\SC\atlasms"        STORAGE="\Virtual
Disks\SC\cfsms\ACTIVE"
ADD LUN 92    HOST="\Hosts\SC\atlasms"       STORAGE="\Virtual
Disks\SC\cfsms_quorum\ACTIVE"
ADD LUN 93    HOST="\Hosts\SC\atlasms"       STORAGE="\Virtual
Disks\SC\cfsms_backup\ACTIVE"
ADD LUN 94    HOST="\Hosts\SC\atlasms"       STORAGE="\Virtual
Disks\SC\cfsms_bootdisk1\ACTIVE"
ADD LUN 95    HOST="\Hosts\SC\atlasms"        STORAGE="\Virtual
Disks\SC\cfsms_bootdisk2\ACTIVE"
```

3.16.2.4 Edit the Configuration Script

Note:

If you are going to configure a clustered management server, Section 3.16.2.3 describes the additional lines to insert in the configuration script for allocating storage for the clustered management server.

Edit the following lines of the configuration script:

- `SELECT MANAGER` command:
  - Replace the IP address with the IP address of the SAN Appliance
  - Check for username and password.
- `SELECT CELL "Uninitialized Storage system"`:

  This command selects an uninitialized storage system. If you have initialized it with the SAN Appliance Element Manager browser, you can move to the next bullet.

  Note:

  You can ignore the next command (`ADD CELL`) if the EVA storage system has been initialized with the SAN Appliance Element Manager browser.

- `ADD CELL` command:
  - Modify the cell name (`atlas` in the example) to customize the cell name;
  - Customize the `DEVICE_COUNT` according to the chosen number of disks for the default disk group; in this example, `DEVICE_COUNT` is equal to 28, which is the total number of disks for a fully equipped 2C2D configuration.
  - Customize the sparing level.

Note:

In this example the HSV is configured with a unique disk group (the default disk group) including the totality of the disks of a 2C-2D configuration (2 shelves, 28 disks). Section 3.16.2.2 provides information for calculating the minimal disk group size requirements if you wish to create a separate disk group for system storage.

- `SELECT CELL` *`cell name`*

  Where *`cell name`* is the name of the storage cell as created with the `ADD CELL` command or the SAN Appliance Element Manager browser.

- `ADD HOST` command
  - A host is a domain, not a single node
  - The `ADD HOST` command create a host. The `WORLD_WIDE_NAME` option specifies the `WWN` for the first port.
  - Identify the `WWN` of each `HBA`:

```
P00 >>> show device pg

pga0.0.0.2.1PGA0WWN 2000-0000-c92c-1c5d
pgb0.0.0.3.1PGB0WWN 2000-0000-c92c-1b2e
```

Caution:

The EVA detects the WW port name, while SRM shows the WW node name; for ES45 and DS20L the leftmost character of the WW port name is 1. When editing the script, use WW port names for the `WORLD_WIDE_OPTION` of `ADD HOST` and `SET HOST` commands.

Table 3–22 displays the worldwide node and port names.

Table 3–22 WW Node and Port Names

WW node name	WW port name
2000-0000-c92c-1c5d	1000-0000-c92c-1c5d

- Double check on the switch:

```
s1switch1:admin> switchshow
switchName:     s1switch1
```

```
switchType:     9.2
switchState:    Online
switchMode:     Native
switchRole:     Principal
switchDomain:   2
switchId:       fffc02
switchWwn:      10:00:00:60:69:51:35:9f
switchBeacon:   OFF
Zoning:         OFF
8port  0: id N2 Online       F-Port 10:00:00:00:c9:2c:1c:5d
port  1: id N2 Online       F-Port 10:00:00:00:c9:2c:1b:2e
port  2: id N2 Online       F-Port 10:00:00:00:c9:2c:1b:05
port  3: -- N2 No_Module
port  4: id N2 Online       F-Port 10:00:00:00:c9:2c:1c:45
port  5: -- N2 No_Module
port  6: id N2 Online       F-Port 10:00:00:00:c9:2c:1b:ff
:
:
port 12: -- N2 No_Module
port 13: id N2 Online       F-Port 50:00:1f:e1:00:13:a3:cc
port 14: id N2 Online       F-Port 50:00:1f:e1:00:13:a3:c9
port 15: id N1 Online       F-Port 10:00:00:00:c9:23:2e:f9
s1switch1:admin>
```

- For each domain, use the WWN of the first HBA for the WORLD_WIDE _NAME option of the ADD HOST command.

Note:

If you have a host name which is a prefix for another host name (example atlas, atlasms), insert the command for creating the prefix (add host "\Hosts\SC\atlas") BEFORE the other ("\Hosts\SC\atlasms"). If you change the order, the second ADD HOST command will fail.

- SET HOST commands
  - The SET HOST command adds a port to the host. This port can be either the second HBA of the first node of the domain or one HBA of the second node of the same domain.
  - There are as many SET HOST commands as additional HBA in the domain.
  - For each domain, use the remaining WWN (the ones that have not been used for the ADD HOST command) to update the WORLD_WIDE_NAME option of the SET HOST commands.
- ADD STORAGE commands
  - For each domain, the following storage is allocated:

16 GB VRAID1 for the CFS disk

1 GB VRAID1 for the generic boot disk

16 GB VRAID1 for the backup/upgrade disk

  - Do not modify the `OS_UNIT_ID` options: they are coherent with `sra setup` settings.
  - *For SC20 configuration, uncomment the ADD STORAGE command for creating the Tru64 disk.*

- `ADD LUN` commands:
  - These commands present disk units to hosts
  - For HP AlphaServer SC configurations, uncomment the `ADD LUN` commands for presenting the Tru64 disks.

Example 3–2 displays a sample SSSU configuration script.

Example 3–2 SSSU Configuration Script

```
! Script to initalize and config atlas via 16.189.121.99
! Using SSSU (SANscript)
! Hewlett Packard
! Date:  10/janv/2003 15:34
!
SELECT MANAGER 16.189.121.99 USERNAME=administrator PASSWORD=administrator
!
! Stop if errors do occur

SET OPTIONS ON_ERROR=HALT_ON_ERROR
! Create the Default Disk Group if requested
SET OPTIONS COMMAND_DELAY=60
SELECT CELL "Uninitialized Storage System1"
ADD CELL  atlas  DEVICE_COUNT=28 SPARE_POLICY=DOUBLE
SELECT CELL atlas
SET OPTIONS COMMAND_DELAY=10

! Create one host with all adapters WWN per domain
ADD FOLDER  "\Hosts\SC"
!
ADD HOST "\Hosts\SC\atlasD0"   WORLD_WIDE_NAME="1000-0000-c92c-1c5d"
OPERATING_SYSTEM=TRU64
SET HOST "\Hosts\SC\atlasD0"   ADD_WORLD_WIDE_NAME="1000-0000-c92c-1b2e"
SET HOST "\Hosts\SC\atlasD0"   ADD_WORLD_WIDE_NAME="1000-0000-c92c-1b2f"
SET HOST "\Hosts\SC\atlasD0"   ADD_WORLD_WIDE_NAME="1000-0000-c92c-1b19"
!
ADD HOST "\Hosts\SC\atlasD1"   WORLD_WIDE_NAME="1000-0000-c92a-490b"
OPERATING_SYSTEM=TRU64
SET HOST "\Hosts\SC\atlasD1"  ADD_WORLD_WIDE_NAME="1000-0000-c92c-2cc8"
SET HOST "\Hosts\SC\atlasD1"   ADD_WORLD_WIDE_NAME="1000-0000-c92c-1bc7"
```

```
SET HOST "\Hosts\SC\atlasD1"   ADD_WORLD_WIDE_NAME="1000-0000-c92c-1bc8"
!
ADD HOST "\Hosts\SC\atlasD2"   WORLD_WIDE_NAME="1000-0000-c92c-1c63"
OPERATING_SYSTEM=TRU64
SET HOST "\Hosts\SC\atlasD2"   ADD_WORLD_WIDE_NAME="1000-0000-c92c-1b05"
SET HOST "\Hosts\SC\atlasD2"   ADD_WORLD_WIDE_NAME="1000-0000-c927-c9b3"
SET HOST "\Hosts\SC\atlasD2"   ADD_WORLD_WIDE_NAME="1000-0000-c927-cb14"

ADD HOST "\Hosts\SC\atlasD3"   WORLD_WIDE_NAME="1000-0000-c92c-1c45"
OPERATING_SYSTEM=TRU64
SET HOST "\Hosts\SC\atlasD3"   ADD_WORLD_WIDE_NAME="1000-0000-c92c-2bee"
SET HOST "\Hosts\SC\atlasD3"   ADD_WORLD_WIDE_NAME="1000-0000-c927-ccee"
SET HOST "\Hosts\SC\atlasD3"   ADD_WORLD_WIDE_NAME="1000-0000-c925-6ad9"

!
! Create Virtual disks
ADD FOLDER "\Virtual Disks\SC"

!
ADD STORAGE "\Virtual Disks\SC\cfs0"   SIZE=16 REDUNDANCY=VRAID1 GROUP="\Disk
Groups\Default Disk Group" OS_UNIT_ID=1 NOPREFERRED_PATH
ADD STORAGE "\Virtual Disks\SC\cfs0_generic"   SIZE=1 REDUNDANCY=VRAID1
GROUP="\Disk Groups\Default Disk Group" OS_UNIT_ID=2 NOPREFERRED_PATH
ADD STORAGE "\Virtual Disks\SC\cfs0_backup"   SIZE=16 REDUNDANCY=VRAID1
GROUP="\Disk Groups\Default Disk Group" OS_UNIT_ID=3 NOPREFERRED_PATH
! Uncomment next line for SC20 configurations
! ADD STORAGE "\Virtual Disks\SC\cfs0_Tru64"   SIZE=16 REDUNDANCY=VRAID1
GROUP="\Disk Groups\Default Disk Group" OS_UNIT_ID=4 NOPREFERRED_PATH

ADD STORAGE "\Virtual Disks\SC\cfs1"   SIZE=16 REDUNDANCY=VRAID1 GROUP="\Disk
Groups\Default Disk Group" OS_UNIT_ID=1 NOPREFERRED_PATH
ADD STORAGE "\Virtual Disks\SC\cfs1_generic"   SIZE=1 REDUNDANCY=VRAID1
GROUP="\Disk Groups\Default Disk Group" OS_UNIT_ID=2 NOPREFERRED_PATH
ADD STORAGE "\Virtual Disks\SC\cfs1_backup"   SIZE=16 REDUNDANCY=VRAID1
GROUP="\Disk Groups\Default Disk Group" OS_UNIT_ID=3 NOPREFERRED_PATH
! Uncomment next line for SC20 configurations
! ADD STORAGE "\Virtual Disks\SC\cfs1_Tru64"   SIZE=16 REDUNDANCY=VRAID1
GROUP="\Disk Groups\Default Disk Group" OS_UNIT_ID=4 NOPREFERRED_PATH

ADD STORAGE "\Virtual Disks\SC\cfs2"   SIZE=16 REDUNDANCY=VRAID1 GROUP="\Disk
Groups\Default Disk Group" OS_UNIT_ID=1 NOPREFERRED_PATH
ADD STORAGE "\Virtual Disks\SC\cfs2_generic"   SIZE=1 REDUNDANCY=VRAID1
GROUP="\Disk Groups\Default Disk Group" OS_UNIT_ID=2 NOPREFERRED_PATH
ADD STORAGE "\Virtual Disks\SC\cfs2_backup"   SIZE=16 REDUNDANCY=VRAID1
GROUP="\Disk Groups\Default Disk Group" OS_UNIT_ID=3 NOPREFERRED_PATH
! Uncomment next line for SC20 configurations
! ADD STORAGE "\Virtual Disks\SC\cfs2_Tru64"   SIZE=16 REDUNDANCY=VRAID1
GROUP="\Disk Groups\Default Disk Group" OS_UNIT_ID=4 NOPREFERRED_PATH

ADD STORAGE "\Virtual Disks\SC\cfs3"   SIZE=16 REDUNDANCY=VRAID1 GROUP="\Disk
Groups\Default Disk Group" OS_UNIT_ID=1 NOPREFERRED_PATH
ADD STORAGE "\Virtual Disks\SC\cfs3_generic"   SIZE=1 REDUNDANCY=VRAID1
GROUP="\Disk Groups\Default Disk Group" OS_UNIT_ID=2 NOPREFERRED_PATH
```

```
ADD STORAGE "\Virtual Disks\SC\cfs3_backup"   SIZE=16 REDUNDANCY=VRAID1
GROUP="\Disk Groups\Default Disk Group" OS_UNIT_ID=3 NOPREFERRED_PATH
! Uncomment next line for SC20 configurations
! ADD STORAGE "\Virtual Disks\SC\cfs3_Tru64"   SIZE=16 REDUNDANCY=VRAID1
GROUP="\Disk Groups\Default Disk Group" OS_UNIT_ID=4 NOPREFERRED_PATH

! Add unit numbers to the SC's and activate them

ADD LUN 1    HOST="\Hosts\SC\atlasD0"          STORAGE="\Virtual
Disks\SC\cfs0\ACTIVE"
ADD LUN 2    HOST="\Hosts\SC\atlasD0"         STORAGE="\Virtual
Disks\SC\cfs0_generic\ACTIVE"
ADD LUN 3    HOST="\Hosts\SC\atlasD0"        STORAGE="\Virtual
Disks\SC\cfs0_backup\ACTIVE"
! Uncomment next line for SC20 configurations
!ADD LUN 4    HOST="\Hosts\SC\atlasD0"        STORAGE="\Virtual
Disks\SC\cfs0_Tru64\ACTIVE"

ADD LUN 11    HOST="\Hosts\SC\atlasD1"         STORAGE="\Virtual
Disks\SC\cfs1\ACTIVE"
ADD LUN 12    HOST="\Hosts\SC\atlasD1"        STORAGE="\Virtual
Disks\SC\cfs1_generic\ACTIVE"
ADD LUN 13    HOST="\Hosts\SC\atlasD1"         STORAGE="\Virtual
Disks\SC\cfs1_backup\ACTIVE"
! Uncomment next line for SC20 configurations
!ADD LUN 14    HOST="\Hosts\SC\atlasD1"        STORAGE="\Virtual
Disks\SC\cfs1_Tru64\ACTIVE"

ADD LUN 21    HOST="\Hosts\SC\atlasD2"        STORAGE="\Virtual
Disks\SC\cfs2\ACTIVE"
ADD LUN 22    HOST="\Hosts\SC\atlasD2"        STORAGE="\Virtual
Disks\SC\cfs2_generic\ACTIVE"
ADD LUN 23    HOST="\Hosts\SC\atlasD2"        STORAGE="\Virtual
Disks\SC\cfs2_backup\ACTIVE"
! Uncomment next line for SC20 configurations
!ADD LUN 24    HOST="\Hosts\SC\atlasD2"        STORAGE="\Virtual
Disks\SC\cfs2_Tru64\ACTIVE"

ADD LUN 31    HOST="\Hosts\SC\atlasD3"        STORAGE="\Virtual
Disks\SC\cfs3\ACTIVE"
ADD LUN 32    HOST="\Hosts\SC\atlasD3"        STORAGE="\Virtual
Disks\SC\cfs3_generic\ACTIVE"
ADD LUN 33    HOST="\Hosts\SC\atlasD3"         STORAGE="\Virtual
Disks\SC\cfs3_backup\ACTIVE"
! Uncomment next line for SC20 configurations
!ADD LUN 34    HOST="\Hosts\SC\atlasD3"        STORAGE="\Virtual
Disks\SC\cfs3_Tru64\ACTIVE"
!
```

3.16.2.5 Run the Configuration Script

When you have completed edits to the EVA configuration script, run the scripting utility either from the HP AlphaServer SC management server, or from a PC connected to the same IP network as your EVA SAN Management Appliance.

Note:

In order to run SSSU from a PC you need the EVA Platform kit for Windows NT.

The following steps apply to running the scripting utility from the HP AlphaServer SC management server:

1. Run the SSSU scripting utility from anywhere on the same IP network as your EVA Storage system as follows:
   ```
   atlasms# ./sssu
   ```
   The `NoCellSelected` prompt will be displayed.
2. Run the configuration script (in the example below, a script for 4 domains without clustered management server):
   ```
   NoCellSelected > file 4domains-nomgt
   ```
   The script may take several minutes to execute due to the number of scripted commands.
3. Verify the configuration on the SAN Appliance PC using the Graphical User Interface.

Note:

Script execution may take a long time. Sometimes it may be quicker to manually execute script lines one at the time.

3.17 Configure the System Storage on the MSA1000

Note:

The HP StorageWorks Modular SAN Array 1000 (MSA1000) storage controller is the entry level storage subsystem for HP AlphaServer SC and is supported for single domain configurations only.

System storage is provided by a RAID subsystem, which is connected to the first two nodes in each domain, as shown in Figure 2–1 on page 2–8. The MSA1000 has two controllers (LEFT and RIGHT). You can configure the RAID subsystem using a command line interpreter (CLI) on the right hand controller (slot 1).

To configure the system storage on a Fibre Channel RAID subsystem, perform the following tasks on each domain:

- Check the MSA1000 Controller Firmware (see Section 3.17.1 on page 3–61)
- Configure the MSA1000 RAID Storage (see Section 3.17.2 on page 3–61)
- Rename the Connections (see Section 3.17.3 on page 3–63)

Figure 3–14 shows the cabling in the example system storage configured in this section.

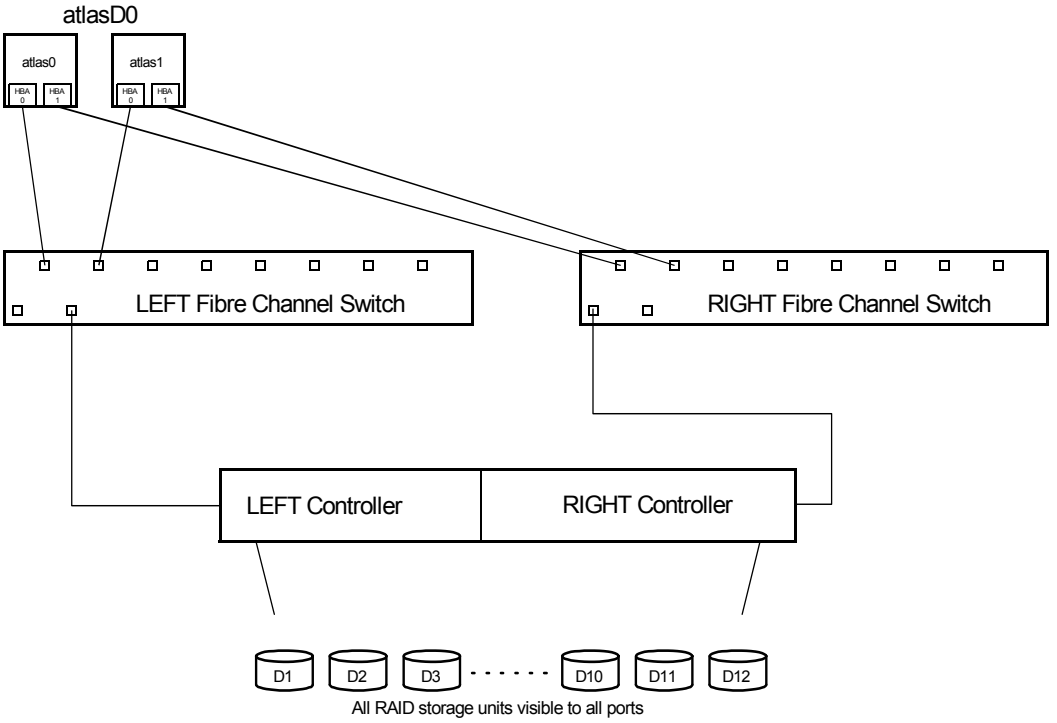

HBA = Fibre Channel Host Bus Adapter

Figure 3–14 Example System Storage Configuration — MSA1000

3.17.1 Check the MSA1000 Controller Firmware

Refer to Appendix J.1. for information on checking the MSA Controller Firmware.

3.17.2 Configure the MSA1000 RAID Storage

Configure the Fibre Channel RAID controllers as follows:

1. Connect a terminal *via* serial cable to one of the MSA1000 controllers and use a terminal emulator to issue commands to the CLI. In the example in this section:
   - The MSA1000 is equipped with an additional dual-bus enclosure, for a total of 4 SCSI buses
   - System storage uses two 36.4 GB disks.
2. Using the CLI, view the installed physical disks as follows:

```
CLI> show disks
Disk List: (box,bay) (bus,ID)     Size     Units
 Disk101     (1,01)    (0,00)     36.4GB    none
 Disk102     (1,02)    (0,01)     36.4GB    none
 Disk103     (1,03)    (0,02)     36.4GB    none
 Disk104     (1,04)    (0,03)     36.4GB    none
 Disk108     (1,08)    (1,00)     36.4GB    none
 Disk109     (1,09)    (1,01)     36.4GB    none
 Disk110     (1,10)    (1,02)     36.4GB    none
 Disk111     (1,11)    (1,03)     36.4GB    none
 Disk201     (2,01)    (2,00)     36.4GB    none
 Disk202     (2,02)    (2,02)     36.4GB    none
 Disk203     (2,03)    (2,03)     36.4GB    none
 Disk204     (2,05)    (2,04)     36.4GB    none
 Disk208     (2,08)    (3,00)     36.4GB    none
 Disk210     (2,10)    (3,02)     36.4GB    none
 Disk211     (2,11)    (3,03)     36.4GB    none
 Disk212     (2,12)    (3,04)     36.4GB    none
```

3. Create the virtual disks and introduce them as storage units, as shown in Table 3–23.

   For a clustered management server, create the following additional storage units:
   - Unit 4: CFS disk
   - Unit 5: Quorum disk
   - Unit 6: Tru64 disk
   - Unit 7: Node 0 boot
   - Unit 8: Node 1 boot

Table 3–23 Introducing the Storage Units (Virtual Disks) — MSA1000

Domain	Command	UNIX Partition
atlasD0	CLI> **ADD UNIT 1 RAID_LEVEL=1 DATA="disk101 disk201" SIZE=16GB SPARE="disk109"**	/, /usr, /var
	CLI> **ADD UNIT 2 RAID_LEVEL=1 DATA="disk101 disk201" SIZE=1500MB SPARE="disk109"**	generic boot
	CLI> **ADD UNIT 3 RAID_LEVEL=1 DATA="disk101 disk201" SIZE=16GB SPARE="disk109"**	backup/upgrade
atlasms	*CLI>* ***ADD UNIT 5 RAID_LEVEL=1 DATA="disk108 disk208" size=16GB SPARE="disk109"***	*CFS disk*
	CLI> ***ADD UNIT 8 RAID_LEVEL=1 DATA="disk108 disk208" size=2G SPARE="disk109"***	*quorum*
	CLI> ***ADD UNIT 4 RAID_LEVEL=1 DATA="disk108 disk208" size=12GB SPARE="disk109"***	*Tru64*
	CLI> ***ADD UNIT 6 RAID_LEVEL=1 DATA="disk108 disk208" size=2GB SPARE="disk109"***	*node 0 boot*
	CLI> ***ADD UNIT 7 RAID_LEVEL=1 DATA="disk108 disk208" size=2GB SPARE="disk109"***	*node 1 boot*[1]

[1]For sizes shown in this example, when creating the last unit you may have to adjust the size to fit the remaining available space.

4. Set the IDENTIFIER label on the storage units, as shown in Table 3–24. This label simplifies the task of identifying disks when using the `hwmgr -v -d` command.

Table 3–24 Setting the Identifiers — MSA1000

Domain	Command
atlasD0	CLI> **SET UNIT_ID 1 1**
	CLI> **SET UNIT_ID 2 2**
	CLI> **SET UNIT_ID 3 3**
atlasms	*CLI>* ***SET UNIT_ID 4 1***
	CLI> ***SET UNIT_ID 5 2***

Table 3–24 Setting the Identifiers — MSA1000

Domain	Command
	CLI> ***SET UNIT_ID 6 3***
	CLI> ***SET UNIT_ID 7 4***
	CLI> ***SET UNIT_ID 8 5***

3.17.3 Rename the Connections

Before you begin to modify the connections, verify that the MSA1000 firmware is as described in Table 3–5 on page 3–23. Rename the connections as follows:

1. Compare the HOST_ID (WWN) reported by the console `show device` command with the connections reported by the controller `SHOW CONNECTIONS` command.

   In this example, `atlas0` and `atlas1` each have two Fibre Channel Host Bus Adapter cards (HBAs). To identify the `atlas0` connections to the LEFT and RIGHT controllers, perform the following steps:

   a. Identify the WWN of each HBA (see Table 3–25), by running the `show device` command at the `atlas0` SRM console prompt:

```
P00>>> show devices pg
pga0.0.0.2.1              PGA0                WWN 1000-0000-c92c-1bba
pgb0.0.0.3.1              PGB0                WWN 1000-0000-c92c-1bff
```

Table 3–25 Identifying the WWN of the HBAs — MSA1000

Domain	HBA	WWN
atlas0	0	2000-0000-c92c-1bba
	1	2000-0000-c92c-1bff
atlas1	0	2000-0000-c92c-1c72
	1	2000-0000-c92c-1c12

For a clustered management server, the WWNs in Table 3–26 may be identified:

Table 3–26 Identifying the WWN of the HBAs — MSA1000 — Management Server

Domain	HBA	WWN
atlasms0	*0*	*2000-0000-c92c-1c32*
	1	*2000-0000-c92c-1c29*
atlasms1	*0*	*2000-0000-c92c-1c42*
	1	*2000-0000-c92c-1c51*

b. Create a naming convention for the connections, to give them meaningful names. The convention used in this example is N<*node#*>-<*adapter#*>

where:

- *node#* is the node number (four-digits, left-pad with zeros as necessary)
- *adapter#* is **0** for HBA 0, and **1** for HBA 1

Note:

These two fields are sufficient to fully identify the connection, as each MSA1000 controller has only one port.

c. List all of the connections (from all HBAs in all nodes) to the MSA1000 controllers, by running the SHOW CONNECTIONS command:

```
CLI> SHOW CONNECTIONS
Connection Name: <Unknown>
   Host WwNN = 20000000-C92C1C72
   Host WwPN = 10000000-C92C1C72
   Profile Name = Default
   Unit Offset = 0
   Controller 1 Port 1 Status = Online
   Controller 2 Port 1 Status = Online

Connection Name: <Unknown>
   Host WwNN = 20000000-C92C1BBA
   Host WwPN = 10000000-C92C1BBA
   Profile Name = Tru64
   Unit Offset = 0
   Controller 1 Port 1 Status = Online
   Controller 1 Port 1 Status = Online

Connection Name: <Unknown>
   Host WwNN = 20000000-C92C1BFF
```

```
   Host WWPN = 10000000-C92C1BFF
   Profile Name = Tru64
   Unit Offset = 0
   Controller 1 Port 1 Status = Online
   Controller 2 Port 1 Status = Online

Connection Name: <Unknown>
   Host WWNN = 20000000-C92C1C12
   Host WWPN = 10000000-C92C1C12
   Profile Name = Tru64
   Unit Offset = 0
   Controller 1 Port 1 Status = Online
   Controller 2 Port 1 Status = Online
...
```

If you have more domains, or a management cluster connected to the same fabric, information similar to the output above is displayed for all nodes equipped with HBAs and connected to the same fabric.

d. Rename the connections using the ADD CONNECTION command:

```
CLI> ADD CONNECTION N0000-0 WWPN = 10000000-C92C1BBA
 PROFILE=Tru64 OFFSET=0
CLI> ADD CONNECTION N0000-1 WWPN = 10000000-C92C1BFF
 PROFILE=Tru64 OFFSET=0
CLI> ADD CONNECTION N0001-0 WWPN = 10000000-C92C1C72
 PROFILE=Tru64 OFFSET=0
CLI> ADD CONNECTION N0001-1 WWPN = 10000000-C92C1C12
 PROFILE=Tru64 OFFSET=0
```

For a clustered management server, rename the connections as follows:

```
CLI> ADD CONNECTION MGT0000-0 WWPN = 10000000-C92C1C32
 PROFILE=Tru64 OFFSET=0
CLI> ADD CONNECTION MGT0000-1 WWPN = 10000000-C92C1C29
 PROFILE=Tru64 OFFSET=0
CLI> ADD CONNECTION MGT0001-0 WWPN = 10000000-C92C1C42
 PROFILE=Tru64 OFFSET=0
CLI> ADD CONNECTION MGT0001-1 WWPN = 10000000-C92C1C51
 PROFILE=Tru64 OFFSET=0
```

Repeat the ADD CONNECTION command for each node connected in the same fabric, as shown in Table 3–27.

Table 3–27 Renaming the Connections — MSA1000

Domain	Node	HBA	Controller	Connection Name
atlasD0	0	0	LEFT	**N0000-0-0**
	0	1	RIGHT	**N0000-0-1**
	1	0	LEFT	**N0000-1-0**
	1	1	RIGHT	**N0000-1-1**

Table 3–27 Renaming the Connections — MSA1000

Domain	Node	HBA	Controller	Connection Name
atlasms0		*0*	*LEFT*	***MGT0000-0***
		1	*RIGHT*	***MGT0000-1***
atlasms1		*0*	*LEFT*	***MGT0001-0***
		1	*RIGHT*	***MGT0001-1***

2. You must ensure that disks intended for use by a domain are visible only by that domain. To do this, set the Access Control List (ACL) for the devices, as shown in Table 3–28.

Table 3–28 Enabling Access to the Units for Connected Nodes — MSA1000

Domain	Command
atlasD0	CLI> **ADD ACL CONNECTION=N0000-0 UNIT=1-3** CLI> **ADD ACL CONNECTION=N0000-1 UNIT=1-3** CLI> **ADD ACL CONNECTION=N0001-0 UNIT=1-3** CLI> **ADD ACL CONNECTION=N0001-1 UNIT=1-3**
atlasms	*CLI> **ADD ACL CONNECTION=MGT0000-0 UNIT=4-8*** *CLI> **ADD ACL CONNECTION=MGT0000-1 UNIT=4-8*** *CLI> **ADD ACL CONNECTION=MGT0001-0 UNIT=4-8*** *CLI> **ADD ACL CONNECTION=MGT0001-1 UNIT=4-8***

Note:

If replacing a component (for example, a host adapter) or reseating a cable, you must update the access path as new connections will be created.

Table 3–15 on page 3–41 describes how these virtual disks are used.

For sample flow and output when configuring the MSA1000, refer to Appendix J.3.

4

Upgrade Installation Procedure

This chapter describes how to upgrade from HP AlphaServer SC Version 2.5 and Version 2.5 (UK1) to HP AlphaServer SC Version 2.6.

If your system has a management server, read Upgrade with a Management Server (see Section 4.4 on page 4–10). If your system has a clustered management server, read Upgrade with a Clustered Management Server (see Section 4.5 on page 4–20). If your system does not have a management server, read Upgrade without a Management Server (see Section 4.6 on page 4–29).

The information in this chapter is structured as follows:

- Understanding the Upgrade Process (see Section 4.1 on page 4–2)
- Pre-Upgrade Audit (see Section 4.2 on page 4–8)
- Preparing RIS for C2 Security (see Section 4.3 on page 4–9)
- Upgrade with a Management Server (see Section 4.4 on page 4–10)
- Upgrade with a Clustered Management Server (see Section 4.5 on page 4–20)
- Upgrade without a Management Server (see Section 4.6 on page 4–29)
- Upgrading the Domains (see Section 4.7 on page 4–37)
- Recover from Failures during an Upgrade (see Section 4.8 on page 4–41)
- Post-Upgrade Tasks (see Section 4.9 on page 4–45)

4.1 Understanding the Upgrade Process

The information in this section is organized as follows:

- Upgrade Versus Installation (see Section 4.1.1 on page 4–2)
- Upgrade Procedure Overview (see Section 4.1.2 on page 4–2)
- Upgrade Restart (see Section 4.1.3 on page 4–3)
- Upgrade States (see Section 4.1.4 on page 4–3)
- Preserved and Unpreserved Files (see Section 4.1.5 on page 4–4)
- Special Upgrade Mechanisms on Domains (see Section 4.1.6 on page 4–5)
- Approximate Timing Guideline (see Section 4.1.7 on page 4–7)

4.1.1 Upgrade Versus Installation

There are two types of HP AlphaServer SC installation:

- **Upgrade installation**: when upgrading a previously installed HP AlphaServer SC system. The only earlier installations supported by upgrade are HP AlphaServer SC Version 2.5 and Version 2.5 (UK1). If you have systems such as Version 2.0, Version 2.4, or Version 2.4A, and wish to upgrade to HP AlphaServer SC Version 2.6, please contact HP AlphaServer SC support.
- **Full installation**: perform a full installation to create a new system. Needs to be performed on new systems. Refer to Chapter 5 or Chapter 6 as appropriate for more information.

4.1.2 Upgrade Procedure Overview

The upgrade procedure is lengthy, and detailed instructions are provided later in this chapter. These instructions should be followed very carefully. However, the upgrade procedure can be summarized as follows:

1. Perform a pre-upgrade audit to identify any problems before the system is even taken out of production. This audit can be carried out during production and it will help minimize the time that the system is out of production.
2. Back up the management server (or the management server cluster, or the first domain where no management server exists).
3. Complete the pre-upgrade steps. From this point, the full system will be out of production.

4. Upgrade the management server (or the management server cluster, or the first domain where no management server exists).
5. At this point, the management server will be upgraded, but the domains will remain out of production.
6. Back up the domains.
7. Upgrade the domains.
8. Complete the post-upgrade tasks.
9. At this point, the full system will be back in production.

If your system has a management server, read Upgrade with a Management Server (see Section 4.4 on page 4–10). If your system has a clustered management server, read Upgrade with a Clustered Management Server (see Section 4.5 on page 4–20). If your system does not have a management server, read Upgrade without a Management Server (see Section 4.6 on page 4–29).

4.1.3 Upgrade Restart

In HP AlphaServer SC Version 2.6, a state-based mechanism controls the upgrade and this mechanism allows you to restart the upgrade process. However, if certain upgrade stages fail or are interrupted, then the affected domains will need to be restored as described in Recover from Failures during an Upgrade (see Section 4.8 on page 4–41).

4.1.4 Upgrade States

The upgrade state applies to the domain and not the node. During an upgrade, a domain will change through several upgrade states from `Pre_Upgrade` to `Upgraded` as described in Table 4–1.

As each upgrade step is successfully performed the current upgrade state for the domain (the `current_upg_state` in the `sc_domain` table) is updated with the name of the state just completed.

If an upgrade step fails and the upgrade is restarted, the `current_upg_state`, which contains the last successful upgrade step, is used to determine the next upgrade step to perform.

The upgrade process is controlled by the `sra upgrade` command and not the `sra` daemon (`srad`). As such, you should be cautious not to interrupt the `sra upgrade` command while the upgrade is in progress.

Table 4–1 Upgrade States

Upgrade State	Description
`Pre_Upgrade`	This is the initial state of the domain
`Upg_Installed`	The upgrade subset has been installed on the domain
`Checked`	The check phase has been completed on the domain
`Setup`	The setup phase to prepare the domain for upgrade has been completed
`Installed`	The Tru64 UNIX V5.1B software and patch kit and the HP AlphaServer SC software have been installed on the domain
`Post_Installed`	The post install phase has been completed
`Members_Added`	All members have been added to the domain
`Members_Booted`	All members have been booted on the domain
`Upgraded`	The cleanup has been performed and the system upgrade has been completed

4.1.4.1 Check the Upgrade State

To check the upgrade state of the domain, use the `rmsquery` command as follows:

```
atlasms# rmsquery -v
sql> select name,current_upg_state,desired_upg_state from sc_domain
name    current_upg_state         desired_upg_state
------------------------------------------------------------
atlasD0 Upgraded                  Upgraded
atlasD1 Upgraded                  Upgraded
atlasD2 Pre_Upgrade               Upgraded
atlasD3 Pre_Upgrade               Upgraded
sql> quit
atlasms#
```

From the example above, `atlasD0` and `atlasD1` are upgraded while `atlasD2` and `atlasD3` are in the pre-upgrade state.

4.1.5 Preserved and Unpreserved Files

Local files and customizations on the HP AlphaServer SC Management Server or Management Server Cluster will be preserved and/or migrated in line with the standard mechanisms of Tru64 UNIX V5.1B Patch Kit 3. Please refer to the *Tru64 UNIX V5.1B Patch Kit 3 Release Notes* for further information.

With respect to the HP AlphaServer SC domains, the upgrade process saves and later restores certain site-specific files and customizations on the following:

- member-specific `/etc/rc.config`
- member-specific `/etc/member_fstab`
- member-specific `/etc/securettys`
- member-specific `/etc/clu_alias.config`

The configuration of SCFS and PFS file systems, and data on these file systems, will be preserved during the upgrade. However, it is advised that standard site backup policy be employed to ensure the safety of the configuration and data on these file systems in the event of a catastrophic failure.

Files not mentioned above will not be preserved by the upgrade process. For example, site-specific changes to the following areas on each domain member will be lost during the upgrade:

- crontab settings
- special member swap settings
- the contents of member `/tmp, /tmp1, /local, /local1`
- additional volumes added to member `/tmp, /tmp1, /local, /local1`

This list and any other **site-specific files and customizations will need to be backed up manually, and then restored manually once the upgrade has finished**. When in doubt, please take appropriate action to archive site-specific files and customizations.

4.1.6 Special Upgrade Mechanisms on Domains

In order to explain the special upgrade mechanism on the domains, it is necessary first to consider the full installation procedure for a domain.

When a domain is being fully installed, the patching of the system to PK3 happens when the domain is standalone/pre-cluster and running from the UNIX disk. Therefore the `dupatch` process only applies the OSFBASE patches.

This simply reflects the fact that the TruCluster subsets within the HP AlphaServer SC product are actually re-mastered from later source code - where the source code actually includes the changes normally included in PK3. Therefore, the TruCluster binaries in the HP AlphaServer SC product are already patched and do not need to be patched again.

Once the HP AlphaServer SC kits are installed on the UNIX disk, then the domain can be successfully created, and so on.

When the full installation is complete, the patch lists in the `setld` database on each domain will indicate that only the Tru64 patches from PK3 are installed. However, through the re-mastering process, we know that the TruCluster subsets already include the PK3 functional changes.

However, in the case of domain upgrade, each domain is already built and a rolling upgrade is not supported on the HP AlphaServer SC. In addition, the TruCluster subsets (in order to attempt to arrive at a similar configuration to the full installation scenario) cannot be removed because the TruCluster kernel/daemons are currently using files from the original TruCluster kits.

Therefore, the process is to first remove the original HP AlphaServer SC subsets from the domain with the exception of the TruCluster kits that came with the original HP AlphaServer SC subsets. The original SRAOSFPATCH and SRATCRBASE subsets kits are then uninstalled because of the dependencies which they place in the lock files for the Tru64 and TruCluster base subsets.

Next, the non-lead members of each domain are deleted, and we proceed to upgrade the Tru64 and TruCluster base subsets to Tru64 V5.1B on the single node domains using `installupdate` while in single-user mode.

The `installupdate` command will use the standard Tru64 V5.1B image from the ris environment and the TruCluster subset from within the HP AlphaServer SC Version 2.6 product.

Once upgraded to Tru64 V5.1B, the TruCluster and Tru64 base subsets of the single node cluster are immediately patched to PK3 using `sc_dupatch`. While the TruCluster subset within the HP AlphaServer SC product already contains the PK3 changes through the re-mastering process described above, it is actually okay to patch it again at this stage using `sc_dupatch`.

However, the kernel rebuild and reboot stages at the end of the patch process are deliberately skipped. This allows the opportunity to install the new HP AlphaServer SC Version 2.6 subsets. Once the HP AlphaServer SC kits are installed, then the new SRAOSFPATCH300 and SRATCRBASE300 subsets are in place, and it is these subsets that reintroduce the special Tru64 and TruCluster hooks to support the HP AlphaServer SC product. At this point, the kernel can be built and the single node cluster rebooted.

The final stage of the process on each domain is to add the non-lead members deleted earlier.

When the domain upgrade process is complete, the patch lists in the `setld` database on each domain will indicate that both Tru64 and TruCluster patches from PK3 are installed.

4.1.7 Approximate Timing Guideline

The time taken to upgrade to HP AlphaServer SC Version 2.6 is dependent on the number of nodes in the system, the amount of memory, and the node types. In addition, the time taken to upgrade the management server or management server cluster will need to be factored into the calculations.

Table 4–2 displays the timeline for systems with a management server, with a clustered management server, and without a management server. The most time consuming steps within the upgrade procedure are listed.

Table 4–2 Upgrade Time Estimates

Activity	Time Estimate
Management Server or Management Cluster or First Domain	
Management Server Backup	data dependent - allow 2 hours
Management Cluster Backup	data dependent - allow 2 hours
First Domain Backup	root/usr/var/boot only - approx 30 minutes
Management Server Upgrade to V5.1B	installupdate - approx 1.5 hours
Management Cluster Upgrade to V5.1B	rolling upgrade - approx 2.5 hours
Management Server Patching to PK3	approx 1.5 hours
Management Cluster Patching to PK3	approx 2.5 hours
First Domain Upgrade and Patch to V5.1B PK3	approx 3 hours
Concluding steps on Management Server	approx 1.5 hours
Concluding steps on Management Cluster	approx 1.5 hours
Concluding steps on First Domain	approx 1.5 hours
Each Subsequent Domain (Upgraded in Parallel)	
Domain Backup	root/usr/var/boot only - approx 30 minutes
Domain Check Phase	approx 10 mins
Domain Upgrade and Patch to V5.1B PK3	approx 5 hours
Re-adding Members	approx 5 hours
Post Upgrade Tasks	
Upgrade each PFS	dependent on number of user-files and the number of SCFS components per PFS
Configure and Diagnose the Interconnect	dependent on number of switches

Table 4–2 Upgrade Time Estimates

Activity	Time Estimate
Restoration in the Event of Failure	
Management Server Restore	data dependent - allow 2 hours
Management Cluster Restore	data dependent - allow 2 hours
First Domain Restore	root/usr/var/boot only - approx 30 minutes
Restoring Other Domains	root/usr/var/boot only - approx 30 minutes

4.2 Pre-Upgrade Audit

While your system is still in production mode, it is possible to perform an audit of the system in order to identify any problems that might subsequently affect the upgrade process.

The `upgrade_check` audit script will check that the basic requirements of the upgrade procedure are met by the system. The audit script will not fix any problems identified, but instead will suggest how the problem might be corrected. Refer to Appendix E.5 for a list of audits performed.

The audit script is non-invasive and can be run while the system is still in production mode. In fact, the audit script can be run repeatedly when the system is in production mode so that the problems identified can be resolved prior to the planned downtime window.

The same audit script is run again during the upgrade procedure once the system is removed from production. This is necessary in order to validate that certain invasive steps, such as marking file systems offline, have indeed been performed correctly before proceeding with the upgrade.

As such, when the audit script is run when a system is in production mode, one would expect to see warnings regarding file systems being online still. Therefore, each reported audit failure should be considered on its own merits before continuing to plan the system down-time for the actual upgrade.

At this point, you should read the current version of the *HP AlphaServer SC Release Notes* particularly any information about upgrade installations. You should also check with your account representative so that you are aware of any *HP AlphaServer SC Support Bulletins* relating to the upgrade procedure.

To run the `upgrade_check` script on the management server (or Node 0, if you do not have a management server), perform the following steps:

1. Insert the *HP AlphaServer SC System Software CD-ROM* in the disk drive.
2. Mount the CD-ROM as the root user, as follows:

a. Create a mount point for the CD-ROM, by running the following command:
```
atlasms# mkdir /cdrom
```

b. Mount the CD-ROM as follows:
```
atlasms# mount -r /dev/disk/cdrom0c /cdrom
```

For more information about mounting a CD-ROM, see Appendix B of the *HP Tru64 UNIX Installation Guide*.

3. Change to the directory in which the kits are stored, as follows:

```
atlasms# cd /cdrom/kits
```

4. Run the following command:

```
atlasms# ./upgrade_check /tmp/upgrade_check.log
```

If `upgrade_check` finds conditions that would cause the upgrade to fail, it will report it to standard output (`stdout`) with a suggestion on how to correct the problem. Refer to Appendix E.5 for a list of tests generated from the `upgrade_check` command.

A detailed log of what actions `upgrade_check` performs to test the system is recorded in `/var/sra/adm/log/InstallSC/upgrade_check.log`, if no logfile is specified on the command line.

4.3 Preparing RIS for C2 Security

If your RIS server will have C2 security enabled, the RIS user file must be changed to ensure that the `ris` password does not expire and deny client access.

Perform the following steps on the RIS server as superuser to modify the RIS user file if you are going to use RIS with C2 security enabled:

1. Edit the file `/tcb/files/auth.db`. This requires you to use the `edauth` utility.

   Use the `edauth` command line utility or the `dxaccounts` graphical user interface to modify the RIS account. See `edauth(8)` or `dxaccounts(8)` for more information.

   Each field is delimited by a colon (`:`)

2. Set the current password field `u_pwd` to an asterisk (`*`).
3. Set the `u_succhg` value to any non-zero value. This value is a `time_t` type printed with `%ld`.
4. Set the `u_life` and `u_exp` fields to `zero`.

The following is an example of a modified `/tcb/files/auth/r/ris` user file:

```
ris:u_name=ris:u_id#11:\
        u_oldcrypt#0:\
        u_pwd=*:\
        u_exp#0:u_life#0:\
```

```
u_succhg#79598399:\
u_suclog#79598399:\
u_lock@:chkent:
```

After you make these changes, the RIS password should not expire and cause a denial of service to clients.

4.4 Upgrade with a Management Server

This section describes how to upgrade a HP AlphaServer SC system that has an unclustered management server. To upgrade with a management server, take the following steps:

1. Back Up the Management Server (see Section 4.4.1 on page 4–10)
2. Upgrade the Management Server (see Section 4.4.2 on page 4–10)

4.4.1 Back Up the Management Server

Perform the following tasks on the management server:

1. Back up the management server root (`/`), `/usr` , and `/var` file domains and filesets. Guidance on one possible method for backing up these filesets on a management server is described in Back Up and Restore the Management Server Root (/), /usr, and /var File Systems (see Section 10.2.2 on page 10–4).
2. It is also recommended that you back up user data before beginning the upgrade installation. This includes data held locally on the management server and data held locally on the domains.

For further information on backup strategies in general, refer to Chapter 9 of the *Tru64 UNIX System Administration Guide*.

You are now ready to upgrade the management server, as described in Section 4.4.2.

4.4.2 Upgrade the Management Server

To upgrade the management server, perform the following:

- Prepare for Upgrade (see Section 4.4.2.1 on page 4–11)
- Perform the Pre-Upgrade Check (see Section 4.4.2.2 on page 4–11)
- Back Up the SC Database (see Section 4.4.2.3 on page 4–12)
- Remove the HP AlphaServer SC Software (see Section 4.4.2.4 on page 4–13)
- Update the Tru64 UNIX Operating System (see Section 4.4.2.5 on page 4–13)
- Install the Operating System Patch Software (see Section 4.4.2.6 on page 4–14)

- Build the New Kernel and Reboot (see Section 4.4.2.7 on page 4–16)
- Configure the RIS Server (see Section 4.4.2.8 on page 4–17)
- Install the HP AlphaServer SC Software (see Section 4.4.2.9 on page 4–17)
- Restore the SC Database (see Section 4.4.2.10 on page 4–18)
- Migrate the SC Database (see Section 4.4.2.11 on page 4–19)
- Register RIS Clients for the New RIS Environment (see Section 4.4.2.12 on page 4–19)
- Build the New Kernel and Reboot (see Section 4.4.2.13 on page 4–19)

4.4.2.1 Prepare for Upgrade

With the system removed from production mode, the following steps should be performed:

1. Disable the SCFS and PFS file systems as follows:
   ```
   atlasms# pfsmgr offline all
   ```
   Once this has completed successfully, and the PFS file systems are offline on all nodes (check that systems are offline on all nodes by using the command `pfsmgr show`), configure out `pfs.mod` as follows:
   ```
   atlasms# scrun -n all /sbin/sysconfig -u pfs
   ```
   There is no need to build or deploy kernels or reboot any nodes at this time.

   Then, mark the SCFS filesystems offline as follows:
   ```
   atlasms# scfsmgr offline all
   ```
   The SCFS and PFS filesystems will now be automatically unmounted. You should use `scfsmgr` repeatedly until all filesystems are shown as unmounted.
2. If present, de-install the PFS subset as follows:
   ```
   atlasms# setld -i |grep PFSMOD
   PFSMOD290 installed Quadrics PFS File System
   atlasms# setld -d PFSMOD290
   ```
3. If present de-install the OTABASE subset (part of Compaq Fortran kit) from the management server as follows:
   ```
   atlasms# setld -i |grep OTABASE
   OTABASE219 installed Compaq Compiled Code Support Library #219
   atlasms# setld -d OTABASE219
   ```
   You are now ready to perform the Pre-Upgrade Check, as described in Section 4.4.2.2.

4.4.2.2 Perform the Pre-Upgrade Check

Check that the system is now ready to be upgraded using the following commands:

1. Insert the *HP AlphaServer SC System Software CD-ROM* in the disk drive.

2. Mount the CD-ROM as the root user, as follows:

   a. Create a mount point for the CD-ROM, by running the following command:
   ```
   atlasms# mkdir /cdrom
   ```

   b. Mount the CD-ROM as follows:
   ```
   atlasms# mount -r /dev/disk/cdrom0c /cdrom
   ```

   For more information about mounting a CD-ROM, see Appendix B of the *HP Tru64 UNIX Installation Guide*.

3. Change to the directory in which the kits are stored, as follows:

   ```
   atlasms# cd /cdrom/kits
   ```

4. Run the following command:

   ```
   atlasms# ./upgrade_check /tmp/upgrade_check.log
   ```

If `upgrade_check` finds conditions that would cause the upgrade to fail, it will report it to standard output (`stdout`) with a suggestion on how to correct the problem. Refer to Appendix E.5 for a list of tests generated from the `upgrade_check` command.

Do not proceed with the upgrade procedure until all tests within this audit are successful. Make whatever corrections are necessary to resolve any issues identified.

A detailed log of what actions `upgrade_check` performs to test the system is recorded in `/var/sra/adm/log/InstallSC/upgrade_check.log`, if no logfile is specified on the command line.

Once all tests are successful, you are ready to Back Up the SC Database, as described in Section 4.4.2.3.

4.4.2.3 Back Up the SC Database

In HP AlphaServer SC Version 2.6, the `msql` daemon underlying the SC database has been updated. In order to preserve the existing data, it is necessary to backup the current SC database to a file and restore from this file later in the upgrade process.

To back up the SC database on the management server, perform the following steps:

1. Insert the *HP AlphaServer SC System Software CD-ROM* in the disk drive.
2. Mount the CD-ROM as the root user, as follows:

   a. Create a mount point for the CD-ROM, by running the following command:
   ```
   atlasms# mkdir /cdrom
   ```

   b. Mount the CD-ROM as follows:
   ```
   atlasms# mount -r /dev/disk/cdrom0c /cdrom
   ```

3. Change to the directory in which the kits are stored, as follows:

   ```
   atlasms# cd /cdrom/kits
   ```

4. Run the following command:

```
atlasms# ./sc_pre_upgrade
```

You are now ready to remove the HP AlphaServer SC software, as described in Section 4.4.2.4.

4.4.2.4 Remove the HP AlphaServer SC Software

Before upgrading the operating system on the management server, you must first de-install the HP AlphaServer SC software as follows:

1. Insert the *HP AlphaServer SC System Software CD-ROM* in the disk drive.
2. Mount the CD-ROM as the root user, as follows:
   a. Create a mount point for the CD-ROM, by running the following command:
      `atlasms# mkdir /cdrom`
   b. Mount the CD-ROM 1 as follows:
      `atlasms# mount -r /dev/disk/cdrom0c /cdrom`
3. Change to the directory in which the kits are stored, as follows:

```
atlasms# cd /cdrom/kits
```

4. Deinstall the previous version of the HP AlphaServer SC System Software:

```
atlasms# ./InstallSC -remove -ms
```

You are now ready to update the Tru64 UNIX operating system, as described in Section 4.4.2.5.

4.4.2.5 Update the Tru64 UNIX Operating System

To upgrade the operating system on the management server:

1. An update installation is performed from single-user mode. Shutdown the system to single-user mode as follows:
   `atlasms# shutdown now`
2. Mount the local file systems:

```
atlasms# /sbin/bcheckrc
```

3. Insert the *Tru64 UNIX Version 5.1B Operating System Volume 1 CD-ROM* into the disk drive.
4. Mount the CD-ROM as follows:
   a. Create a mount point for the CD-ROM, by running the following command:
      `atlasms# mkdir /cdrom`
   b. Mount the CD-ROM as follows:
      `atlasms# mount -r /dev/disk/cdrom0c /cdrom`

5. Start the upgrade from CD-ROM as follows (approx 90 minutes duration):

   ```
   atlasms# /sbin/installupdate -nogui /cdrom
   ```

For more information on upgrading the Tru64 UNIX Operating System, refer to the *HP Tru64 UNIX Installation Guide*.

You are now ready to install the Tru64 UNIX patch software, as described in Section 4.4.2.6.

4.4.2.6 Install the Operating System Patch Software

Install the operating system patch software as follows:

1. Unpack the latest Tru64 UNIX patch kit tar file in the `/patches` directory. The operating system patch software kit (`T64V51BB24AS0003-20030929.tar`) is available from the following location:
   `<http://www.itrc.hp.com/>`

   or from your local HP support representative.

   Note:

   For HP AlphaServer SC Version 2.6, you should load Tru64 UNIX V5.1B PK3 only. Do NOT run the standard dupatch script to patch the management server at this time. In HP AlphaServer SC Version 2.6, use the alternative patching script, called sc_dupatch, that is available on the *HP AlphaServer SC System Software CD-ROM*.

2. Shutdown the system to single-user mode as follows:

   ```
   atlasms# shutdown now
   ```

3. Mount the local file systems:

   ```
   atlasms# /sbin/bcheckrc
   ```

4. Insert the *HP AlphaServer SC System Software CD-ROM* in the disk drive.
5. Mount the CD-ROM as the root user, as follows:
   a. Create a mount point for the CD-ROM, by running the following command:
      ```
      atlasms# mkdir /cdrom
      ```
   b. Mount the CD-ROM as follows:
      ```
      atlasms# mount -r /dev/disk/cdrom0c /cdrom
      ```
6. Change to the directory in which the kits are stored, as follows:

   ```
   atlasms# cd /cdrom/kits
   ```

7. Disable argument limits by running the following command (in light of a known issue with PK3 due to the number of patches, this step is necessary):

```
atlasms# sysconfig -r proc exec_disable_arg_limit=1
```

8. Perform the patch precheck phase to see if there are any potential problems with the patch kit on your management server. The check can take 20-30 minutes, depending on the patches already installed on the management server. Run the supplied HP AlphaServer SC patch script to check the patches for the management server as follows:

   ```
   atlasms# ./sc_dupatch -ms_upgrade -kit path \
               -product Tru64_UNIX_V5.1B -precheck_only
   ```

   where:

   -ms_upgrade indicates that you are patching the management server

   -kit *path* specifies the directory where you unpacked the patch kit

   -product Tru64_UNIX_V5.1B specifies the product to which the patch applies

   -precheck_only indicates that you only want to do the precheck phase of the patch process at this time.

   Note:

   When upgrading from HP AlphaServer SC Version 2.5 (UK1) to HP AlphaServer SC Version 2.6, the following patches will fail the prerequisite/file applicability check:

   ```
   Patch 00423.00 - Fix potential denial of service
   Patch 01296.00 - Prevents a possible replay attack when using IPsec
   Patch 01330.00 - Adds control for encryption types used by Kerberos
   Patch 00416.00 - Fix for creacct hang
   Patch 00716.00 - Performance enhancement for IPsec
   Patch 01079.00 - Migrate from /etc/svc.conf to /etc/nsswitch.conf
   Patch 01276.00 - Security (SSRT3518)
   Patch 01361.00 - During CDSA configuration mod_install core dumps
   Patch 01147.00 - OpenGL library missing two extensions
   ```

   This is normal behaviour and will not prevent the upgrade continuing. However, if any unexpected problems are encountered installing patches do not continue the installation process. Stop the patch install, resolve the problem, and re-try the patch install again.

9. Run the HP AlphaServer SC patch script in full install mode as follows (approx 90 minutes duration):

   ```
   atlasms# ./sc_dupatch -ms_upgrade -kit path \
               -product Tru64_UNIX_V5.1B -deps_only -proceed
   ```

   using the same *path* as that used in step 6 above.

   where:

`-ms_upgrade` indicates that you are patching the management server

`-kit` *`path`* specifies the directory where you unpacked the patch kit

`-product Tru64_UNIX_V5.1B` specifies the product to which the patch applies

`-deps_only` specifies that patch dependency checks should be performed and that inventory checks should be skipped. This check is useful in a system where files have been replaced by hand (for example, where new binary is copied into a directory in place of the binary recorded in the `setld` inventory files).

`-proceed` specifies that the installation should proceed with the patches that pass the dependency checks.

10. When the HP AlphaServer SC patch script is finished, the management server kernel will NOT be rebuilt and the system will NOT be rebooted.

You are now ready to build the new kernel and reboot, as described in Section 4.4.2.7.

4.4.2.7 Build the New Kernel and Reboot

To build the kernel on a management server, perform the following steps:

1. Save a copy of the existing `/vmunix` file. If possible, save the file in the root (`/`) directory, as follows:
   ```
   atlasms# cp /vmunix /vmunix.save
   ```
   If there are disk space constraints, you can save the kernel file in a file system other than root. For example:
   ```
   atlasms# cp /vmunix /usr/vmunix.save
   ```
2. Run the `/usr/sbin/doconfig` program specifying the name of the target configuration file with the `-c` option. For example, on a system named `atlasms`, enter the following command:
   ```
   atlasms# /usr/sbin/doconfig -c ATLASMS
   *** KERNEL CONFIGURATION AND BUILD PROCEDURE ***
   Saving /sys/conf/ATLASMS as /sys/conf/ATLASMS.bck
   ```
3. You are prompted to indicate whether or not you want to edit the configuration file:
   ```
   Do you want to edit the configuration file? (y/n) [n]:
   ```
   Accept the default to indicate that you do not want to edit the configuration file; the `/usr/sbin/doconfig` program builds a new kernel.
4. When the kernel configuration and build are completed without errors, copy the new `vmunix` file to `/vmunix`. On a system named `atlasms`, enter the following command:
   ```
   atlasms# cp /sys/ATLASMS/vmunix /vmunix
   ```
5. Reboot the system as follows:
   ```
   atlasms# /usr/sbin/shutdown -r now
   ```

You are now ready to configure the RIS server, as described in Section 4.4.2.8.

4.4.2.8 Configure the RIS Server

The upgrade of the Tru64 UNIX operating system on each domain will be performed using a Remote Installation Services (RIS) server. Load the Tru64 UNIX V5.1B operating system into the RIS environment as follows:

1. Insert the *Tru64 UNIX Version 5.1B Operating System Volume 1 CD-ROM* in the disk drive.
2. Mount the CD-ROM as the root user, as follows:
   a. Create a mount point for the CD-ROM, by running the following command:
      `atlasms# mkdir /cdrom`
   b. Mount the CD-ROM as follows:
      `atlasms# mount -r /dev/disk/cdrom0c /cdrom`
3. Run the `ris` command as the `root` user, as follows:
   `atlasms# ris`
4. Choose the `Install software products` option by entering `i` at the prompt:
   `Enter your choice: i`
5. The RIS Installation menu displays the installation options. Choose option `1`, the `Install software into a new area` option.
6. Enter the full pathname for the distribution media, as follows:
   ```
   Enter the device special file name or the path of the directory
   where the software is located
   (for example, /mnt/ALPHA/BASE): /cdrom/ALPHA/BASE
   ```
7. Choose the standard boot method.
8. Choose to extract the software from the *Tru64 UNIX Version 5.1B Operating System Volume 1 CD-ROM*.
9. Choose to install all mandatory and all optional subsets. You will need to go through a number of pages of options before selecting this option.
10. Enter `y` to confirm that the subset list is correct. The subset extraction process begins.

You are now ready to install the HP AlphaServer SC software, as described in Section 4.4.2.9.

4.4.2.9 Install the HP AlphaServer SC Software

Once the operating system on the management server has been upgraded, install the HP AlphaServer SC software as follows:

1. Insert the *HP AlphaServer SC System Software CD-ROM* in the disk drive.
2. Mount the CD-ROM as the root user, as follows:
   a. Create a mount point for the CD-ROM, by running the following command:
      `atlasms# mkdir /cdrom`

b. Mount the CD-ROM as follows:
```
atlasms# mount -r /dev/disk/cdrom0c /cdrom
```

3. Change to the directory in which the kits are stored, as follows:
```
atlasms# cd /cdrom/kits
```

4. Install the HP AlphaServer SC System Software as follows:
```
atlasms# ./InstallSC -install -ms
```

5. If PFS was previously installed, then install the new PFS subset on the management server as follows:
```
atlasms# cd PFS
atlasms# setld -l . PFSMOD300
```

You are now ready to restore the SC database, as described in Section 4.4.2.10.

4.4.2.10 Restore the SC Database

In HP AlphaServer SC Version 2.6, the `msql` daemon underlying the SC database has been updated. Earlier in Section 4.4.2.3 the original SC database was backed up to a file. It is now necessary to restore the SC database from this file. To restore the SC database on the management server, perform the following steps:

1. Insert the *HP AlphaServer SC System Software CD-ROM* in the disk drive.
2. Mount the CD-ROM as the root user, as follows:
   a. Create a mount point for the CD-ROM, by running the following command:
   ```
   atlasms# mkdir /cdrom
   ```
   b. Mount the CD-ROM as follows:
   ```
   atlasms# mount -r /dev/disk/cdrom0c /cdrom
   ```
3. Change to the directory in which the kits are stored, as follows:
```
atlasms# cd /cdrom/kits
```
4. Run the following command:
```
atlasms# ./sc_post_upgrade
```

Note:

The `sc_post_upgrade` command will simply restore the original database. You may see the following warning:

```
rmstbladm: Warning: table sc_procurve is not present in backup
file
```

The migration of the SC database as described in Section 4.4.2.11 will introduce this new table and other new database settings required by the HP AlphaServer SC software release.

You are now ready to migrate the SC Database, as described in Section 4.4.2.11.

4.4.2.11 Migrate the SC Database

New versions of the HP AlphaServer SC software may include new tables, or new fields within existing tables in the SC Database. It is necessary to upgrade your database to include these new tables and fields and to populate them with appropriate data.

To migrate the database, run the following command:

```
atlasms# sc_upgrade_db
```

When prompted, you should supply a base address for the Preferred Server Cluster Aliases. Refer to chapter 19 of the *HP AlphaServer SC System Administration Guide* for further information.

You are now ready to register RIS clients for the New RIS Environment, as described in Section 4.4.2.12.

4.4.2.12 Register RIS Clients for the New RIS Environment

Register all domain members as clients of Tru64 UNIX V5.1B, as follows:

```
atlasms# sra edit
sra> sys
sys> update ris all
```

Note:

In response to the `sra` command above and in response to subsequent `sra` commands, you may receive ongoing warnings to upgrade the SC Database. These warnings should be ignored, and once all domains have been upgraded, the procedure as described in Section 4.9.2 will be used to upgrade the database revision.

You are now ready to build the new kernel and reboot, as described in Section 4.4.2.13.

4.4.2.13 Build the New Kernel and Reboot

You now need to once again build the kernel and reboot. Follow the steps as described in Build the New Kernel and Reboot (see Section 4.4.2.7 on page 4–16).

You are now ready to upgrade the domains, as described in Section 4.7.

4.5 Upgrade with a Clustered Management Server

This section describes how to upgrade a HP AlphaServer SC system that has a clustered management server. To upgrade with a clustered management server, take the following steps:

1. Back Up the Clustered Management Server (see Section 4.5.1 on page 4–20)
2. Upgrade the Clustered Management Server (see Section 4.5.2 on page 4–20)

4.5.1 Back Up the Clustered Management Server

Perform the following tasks on the clustered management server:

1. Back up the clustered management server root (`/`), `/usr` , and `/var` file domains and filesets. Guidance on one possible method for backing up these filesets on a management server is described in Back Up and Restore the Management Server Root (/), /usr, and /var File Systems (see Section 10.2.2 on page 10–4). You should also backup up the member-specific boot partitions on the clustered management server.
2. It is also recommended that you back up user data before beginning the upgrade installation. This includes data held locally on the clustered management server and data held locally on the domains.

   For further information on backup strategies in general, refer to Chapter 9 of the *Tru64 UNIX System Administration Guide*.

You are now ready to upgrade the clustered management server, as described in Section 4.5.2.

4.5.2 Upgrade the Clustered Management Server

To upgrade the clustered management server, perform the following:

- Prepare for Upgrade (see Section 4.5.2.1 on page 4–21)
- Perform the Pre-Upgrade Check (see Section 4.5.2.2 on page 4–21)
- Back Up the SC Database (see Section 4.5.2.3 on page 4–22)
- Remove the HP AlphaServer SC Software (see Section 4.5.2.4 on page 4–23)
- Update the Tru64 UNIX Operating System (see Section 4.5.2.5 on page 4–23)
- Install the Operating System Patch Software (see Section 4.5.2.6 on page 4–25)
- Configure the RIS Server (see Section 4.5.2.7 on page 4–26)
- Install the HP AlphaServer SC Software (see Section 4.5.2.8 on page 4–27)

- Restore the SC Database (see Section 4.5.2.9 on page 4–27)
- Migrate the SC Database (see Section 4.5.2.10 on page 4–28)
- Register RIS Clients for the New RIS Environment (see Section 4.5.2.11 on page 4–28)
- Build the New Kernel and Reboot (see Section 4.5.2.12 on page 4–29)

4.5.2.1 Prepare for Upgrade

With the system removed from production mode, the following steps should be performed:

1. Disable the SCFS and PFS file systems as follows:
   ```
   atlasms0# pfsmgr offline all
   ```
   Once this has completed successfully, and the PFS file systems are offline on all nodes (check that systems are offline on all nodes by using the command `pfsmgr show`), configure out `pfs.mod` as follows:
   ```
   atlasms0# scrun -n all /sbin/sysconfig -u pfs
   ```
   There is no need to build or deploy kernels or reboot any nodes at this time.

   Then, mark the SCFS filesystems offline as follows:
   ```
   atlasms0# scfsmgr offline all
   ```
   The SCFS and PFS filesystems will now be automatically unmounted. You should use `scfsmgr` repeatedly until all filesystems are shown as unmounted.
2. If present, de-install the PFS subset as follows:
   ```
   atlasms0# setld -i |grep PFSMOD
   PFSMOD290 installed Quadrics PFS File System
   atlasms0# setld -d PFSMOD290
   ```
3. If present de-install the OTABASE subset (part of Compaq Fortran kit) from the management server as follows:
   ```
   atlasms0# setld -i |grep OTABASE
   OTABASE219 installed Compaq Compiled Code Support Library #219
   atlasms0# setld -d OTABASE219
   ```
   You are now ready to perform the Pre-Upgrade Check, as described in Section 4.5.2.2.

4.5.2.2 Perform the Pre-Upgrade Check

Check that the system is now ready to be upgraded using the following commands:

1. Insert the *HP AlphaServer SC System Software CD-ROM* in the disk drive.
2. Mount the CD-ROM as the root user, as follows:
   a. Create a mount point for the CD-ROM, by running the following command:
      ```
      atlasms0# mkdir /cdrom
      ```
   b. Mount the CD-ROM as follows:

```
atlasms0# mount -r /dev/disk/cdrom0c /cdrom
```

3. Change to the directory in which the kits are stored, as follows:

   ```
   atlasms0# cd /cdrom/kits
   ```

4. Run the following command:

   ```
   atlasms0# ./upgrade_check /tmp/upgrade_check.log
   ```

If `upgrade_check` finds conditions that would cause the upgrade to fail, it will report it to standard output (`stdout`) with a suggestion on how to correct the problem. Refer to Appendix E.5 for a list of tests generated from the `upgrade_check` command.

Do not proceed with the upgrade procedure until all tests within this audit are successful. Make whatever corrections are necessary to resolve any issues identified.

A detailed log of what actions `upgrade_check` performs to test the system is recorded in `/var/sra/adm/log/InstallSC/upgrade_check.log`, if no logfile is specified on the command line.

Once all tests are successful, you are ready to Back Up the SC Database, as described in Section 4.5.2.3.

4.5.2.3 Back Up the SC Database

In HP AlphaServer SC Version 2.6, the `msql` daemon underlying the SC database has been updated. In order to preserve the existing data, it is necessary to backup the current SC database to a file and restore from this file later in the upgrade process.

To back up the SC database on the management server, perform the following steps:

1. Insert the HP AlphaServer SC Version 2.6 System Software CD-ROM in the disk drive.
2. Mount the CD-ROM as the root user, as follows:
   a. Create a mount point for the CD-ROM, by running the following command:
      ```
      atlasms0# mkdir /cdrom
      ```
   b. Mount the CD-ROM as follows:
      ```
      atlasms0# mount -r /dev/disk/cdrom0c /cdrom
      ```
3. Change to the directory in which the kits are stored, as follows:

   ```
   atlasms0# cd /cdrom/kits
   ```

4. Run the following command:

   ```
   atlasms0# ./sc_pre_upgrade
   ```

You are now ready to remove the HP AlphaServer SC software, as described in Section 4.5.2.4.

4.5.2.4 Remove the HP AlphaServer SC Software

Before upgrading the operating system on the management server, you must first de-install the HP AlphaServer SC software as follows:

1. Insert the *HP AlphaServer SC System Software CD-ROM* in the disk drive.
2. Mount the CD-ROM as the root user, as follows:
   a. Create a mount point for the CD-ROM, by running the following command:
      `atlasms0# mkdir /cdrom`
   b. Mount the CD-ROM 1 as follows:
      `atlasms0# mount -r /dev/disk/cdrom0c /cdrom`
3. Change to the directory in which the kits are stored, as follows:

   `atlasms0# cd /cdrom/kits`
4. Deinstall the previous version of the HP AlphaServer SC System Software:

   `atlasms0# ./InstallSC -remove -ms`

   After the previous version of the HP AlphaServer SC System software is removed, the CAA applications for MSQL, RMS, and SRA will remain registered. This will cause CAA warnings to be displayed on the console. These warnings can be ignored and the CAA services will be restored to normal once the new HP AlphaServer SC system software is installed.

You are now ready to update the Tru64 UNIX operating system, as described in Section 4.5.2.5.

4.5.2.5 Update the Tru64 UNIX Operating System

The clustered management server is upgraded using the rolling upgrade procedure. This procedure is described in Chapter 7 of the *TruCluster Server Cluster Installation* document.

Upgrade the operating system on the clustered management server as follows:

1. Insert the *Tru64 Associated Products Volume 2 Version 5.1B CD-ROM* in the disk drive.
2. Mount the CD-ROM and copy the TruCluster kit from the CD-ROM, as follows:
   a. Create a mount point for the CD-ROM, by running the following command:
      `atlasms0# mkdir /cdrom`
   b. Mount the CD-ROM as follows:
      `atlasms0# mount -r /dev/disk/cdrom0c /cdrom`
   c. Create a directory for the kits as follows:
      `atlasms0# mkdir /usr/kits`
   d. Change to the directory `cdrom`, as follows:
      `atlasms0# cd /cdrom`

e. Copy the files to that location as follows:
```
atlasms0# tar cf - . | (cd /usr/kits; tar xvf -)
```

f. Unmount the CD-ROM as follows:
```
atlasms0# cd /; umount /cdrom
```

3. Perform the setup stage on the lead member as follows (approx 10 minutes duration):

```
atlasms0# clu_upgrade setup 1
```

During the setup phase, you may see occasional tagging warnings as follows that can be ignored:

```
*** Error ***
The tar commands used to create tagged files in the '/usr' file system
 have reported the following errors and warnings:
tar: lib/nls/msg/en_US.88591/ladebug.cat : No such file or directory
```

4. Reboot the non-lead member of the clustered management server as follows:

```
atlasms1# shutdown -r now
```

5. When the non-lead member has finished rebooting, perform the preinstall stage on the lead member as follows (approx 40 minutes duration):

```
atlasms0# clu_upgrade preinstall
```

6. Insert the *Tru64 UNIX Version 5.1B Operating System Volume 1 CD-ROM* into the disk drive.

7. Perform the install stage on the lead member as follows (approx 60 minutes duration):

```
atlasms0# shutdown -h now
>>> boot -fl s
atlasms0# init s
atlasms0# bcheckrc
atlasms0# lmf reset
atlasms0# mount -r /dev/disk/cdrom0c /cdrom
atlasms0# installupdate -u /cdrom
```

During `installupdate`, you may see warnings to the console as follows that can be ignored:

```
The following software may require reinstallation after the Update Instal-
lation is completed:
AlphaServer SC Patch V2.5 UK1
```

8. Perform the postinstall stage on the lead member as follows (approx 2 minutes duration):

```
atlasms0# clu_upgrade postinstall
```

9. Perform the roll stage on the non-lead member of the clustered management server as follows (approx 20 minutes duration):

```
atlasms1# shutdown -h now
>>> boot -fl s
atlasms1# init s
```

```
atlasms1# bcheckrc
atlasms1# lmf reset
atlasms1# clu_upgrade -f roll
```

10. Perform the switch stage on the lead member as follows (approx 2 minutes duration):

    ```
    atlasms0# clu_upgrade switch
    ```

11. Reboot the lead member as follows:

    ```
    atlasms0# shutdown -r now
    ```

12. When the lead member has finished rebooting, reboot the non-lead member as follows:

    ```
    atlasms1# shutdown -r now
    ```

13. Perform the clean phase on the lead member as follows (approx 10 minutes duration):

    ```
    atlasms0# clu_upgrade clean
    ```

    During the clean phase, there is no immediate need to run the Update Administration Utility.

You are now ready to install the Tru64 UNIX patch software, as described in Section 4.5.2.6.

4.5.2.6 Install the Operating System Patch Software

Install the operating system patch software as follows:

1. Unpack the latest Tru64 UNIX patch kit tar file in the `/patches` directory. The operating system patch software kit (`T64V51BB24AS0003-20030929.tar`) is available from the following location:
   `<http://www.itrc.hp.com/>`

   or from your local HP support representative.

2. Disable argument limits on both members of the clustered management server by running the following command (in light of a known issue with PK3 due to the number of patches, this step is necessary):

   ```
   atlasms0# sysconfig -r proc exec_disable_arg_limit=1
   atlasms1# sysconfig -r proc exec_disable_arg_limit=1
   ```

3. Install the Tru64 UNIX patch kit on the clustered management server using the following commands executed on the lead member (approx 90 minutes duration):

   ```
   atlasms0# cd /patches
   atlasms0# ./dupatch
   ```

Note:

When upgrading from HP AlphaServer SC Version 2.5 (UK1) to HP AlphaServer SC Version 2.6, the following patches will fail the prerequisite/file applicability check:
`Patch 00423.00 - Fix potential denial of service`

```
Patch 01296.00 - Prevents a possible replay attack when using IPsec
Patch 01330.00 - Adds control for encryption types used by Kerberos
Patch 00416.00 - Fix for creacct hang
Patch 00716.00 - Performance enhancement for IPsec
Patch 01079.00 - Migrate from /etc/svc.conf to /etc/nsswitch.conf
Patch 01276.00 - Security (SSRT3518)
Patch 01361.00 - During CDSA configuration mod_install core dumps
Patch 01147.00 - OpenGL library missing two extensions
```

This is normal behaviour and will not prevent the upgrade continuing. However, if any unexpected problems are encountered installing patches do not continue the installation process. Stop the patch install, resolve the problem, and re-try the patch install again.

You are now ready to configure the RIS server, as described in Section 4.5.2.7.

4.5.2.7 Configure the RIS Server

The upgrade of the Tru64 UNIX operating system on each domain will be performed using a Remote Installation Services (RIS) server. Load the Tru64 UNIX V5.1B operating system into the RIS environment as follows:

1. Insert the *Tru64 UNIX Version 5.1B Operating System Volume 1 CD-ROM* in the disk drive.
2. Mount the CD-ROM as the root user, as follows:
   a. Create a mount point for the CD-ROM, by running the following command:
      `atlasms0# mkdir /cdrom`
   b. Mount the CD-ROM as follows:
      `atlasms0# mount -r /dev/disk/cdrom0c /cdrom`
3. Run the `ris` command as the `root` user, as follows:
   `atlasms0# ris`
4. Choose the `Install software products` option by entering `i` at the prompt:
   `Enter your choice: i`
5. The RIS Installation menu displays the installation options. Choose option `1`, the `Install software into a new area` option.
6. Enter the full pathname for the distribution media, as follows:
   ```
   Enter the device special file name or the path of the directory
   where the software is located
   (for example, /mnt/ALPHA/BASE): /cdrom/ALPHA/BASE
   ```
7. Choose the standard boot method.
8. Choose to extract the software from the *Tru64 UNIX Version 5.1B Operating System Volume 1 CD-ROM*.

9. Choose to install all mandatory and all optional subsets. You will need to go through a number of pages of options before selecting this option.
10. Enter `y` to confirm that the subset list is correct. The subset extraction process begins.

You are now ready to install the HP AlphaServer SC software, as described in Section 4.5.2.8.

4.5.2.8 Install the HP AlphaServer SC Software

Once the operating system on the management server has been upgraded, install the HP AlphaServer SC software as follows:

1. Insert the *HP AlphaServer SC System Software CD-ROM* in the disk drive.
2. Mount the CD-ROM as the root user, as follows:
   a. Create a mount point for the CD-ROM, by running the following command:
      ```
      atlasms0# mkdir /cdrom
      ```
   b. Mount the CD-ROM as follows:
      ```
      atlasms0# mount -r /dev/disk/cdrom0c /cdrom
      ```
3. Change to the directory in which the kits are stored, as follows:
   ```
   atlasms0# cd /cdrom/kits
   ```
4. Install the HP AlphaServer SC System Software:
   ```
   atlasms0# ./InstallSC -install -ms
   ```
5. If PFS was previously installed, then install the new PFS subset on the management server as follows:
   ```
   atlasms0# cd PFS
   atlasms0# setld -l . PFSMOD300
   ```

You are now ready to restore the SC database, as described in Section 4.5.2.9.

4.5.2.9 Restore the SC Database

In HP AlphaServer SC Version 2.6, the `msql` daemon underlying the SC database has been updated. Earlier in Section 4.5.2.3 the original SC database was backed up to a file. It is now necessary to restore the SC database from this file. To restore the SC database on the management server, perform the following steps:

1. Insert the *HP AlphaServer SC System Software CD-ROM* in the disk drive.
2. Mount the CD-ROM as the root user, as follows:
   a. Create a mount point for the CD-ROM, by running the following command:
      ```
      atlasms0# mkdir /cdrom
      ```
   b. Mount the CD-ROM as follows:
      ```
      atlasms0# mount -r /dev/disk/cdrom0c /cdrom
      ```

3. Change to the directory in which the kits are stored, as follows:

```
atlasms0# cd /cdrom/kits
```

4. Run the following command:

```
atlasms0# caa_relocate SC05msql -c atlasms0
atlasms0# ./sc_post_upgrade
```

Note:

The `sc_post_upgrade` command will simply restore the original database. You may see the following warning:

```
rmstbladm: Warning: table sc_procurve is not present in backup file
```

The migration of the SC database as described in Section 4.5.2.10 will introduce this new table and other new database settings required by the HP AlphaServer SC software release.

You are now ready to migrate the SC Database, as described in Section 4.5.2.10.

4.5.2.10 Migrate the SC Database

New versions of the HP AlphaServer SC software may include new tables, or new fields within existing tables in the SC Database. It is necessary to upgrade your database to include these new tables and fields and to populate them with appropriate data.

To migrate the database, run the following command:

```
atlasms0# sc_upgrade_db
```

When prompted, you should supply a base address for the Preferred Server Cluster Aliases. Refer to Chapter 19 of the *HP AlphaServer SC System Administration Guide* for further information.

You are now ready to register RIS clients for the New RIS Environment, as described in Section 4.5.2.11.

4.5.2.11 Register RIS Clients for the New RIS Environment

Register all domain members as clients of Tru64 UNIX V5.1B, as follows:

```
atlasms0# sra edit
sra> sys
sys> update ris all
```

Note:

In response to the `sra` command above and in response to subsequent `sra` commands, you may receive ongoing warnings to upgrade the SC Database. These warnings should be ignored, and once all domains have been upgraded, the procedure as described in Section 4.9.2 will be used to upgrade the database revision.

You are now ready to build the new kernel and reboot, as described in Section 4.5.2.12.

4.5.2.12 Build the New Kernel and Reboot

Build the kernel on a clustered management server, as follows:

```
atlasms0# BuildKernels
atlasms0# DeployKernels
```

Once the kernels are built and deployed, the system should be shutdown as follows:

```
atlasms0# shutdown -ch now
```

Once the nodes are shutdown, boot them again from the consoles.

You are now ready to upgrade the domains, as described in Section 4.7.

4.6 Upgrade without a Management Server

This section describes how to upgrade an HP AlphaServer SC system that does not have a management server. The upgrade of the first domain requires the execution of a number of manual commands, that is, the user is responsible for driving the process. Once the first domain is upgraded, the automatic upgrade facility (`sra upgrade`) can be used to upgrade the other domains.

The steps to upgrade a system without a management server are as follows:

1. Back Up the First Domain (see Section 4.6.1 on page 4–29)
2. Upgrade the First Domain (see Section 4.6.2 on page 4–30)

4.6.1 Back Up the First Domain

Perform the following tasks on the first node of the first domain:

1. Back up the member-specific boot partitions and the cluster root (`/`), `/usr` , and `/var` file domains and filesets of the first domain as follows:

   ```
   atlas0# /usr/sra/bin/sra_cluster_backup -force -disk dsk5 backup
   ```

   where `dsk5` corresponds to the disk selected as the backup disk for domain 0.

2. It is also recommended that you back up user data before beginning the upgrade installation. This includes data held locally on the management server and data held locally on the domains.

For further information on backup strategies in general, refer to Chapter 9 of the *Tru64 UNIX System Administration Guide*.

You are now ready to upgrade the first domain, as described in Section 4.6.2.

4.6.2 Upgrade the First Domain

To upgrade the first domain, perform the following:

- Prepare for Upgrade (see Section 4.6.2.1 on page 4–30)
- Perform the Pre-Upgrade Check (see Section 4.6.2.2 on page 4–31)
- Back Up the SC Database (see Section 4.6.2.3 on page 4–31)
- Install the Upgrade Subset on the First Domain (see Section 4.6.2.4 on page 4–32)
- Disable Cookies (see Section 4.6.2.5 on page 4–33)
- Configure the RIS Server (see Section 4.6.2.6 on page 4–33)
- Update the Tru64 UNIX Operating System (see Section 4.6.2.7 on page 4–34)
- Register RIS Clients for the New RIS Environment (see Section 4.6.2.8 on page 4–37)

4.6.2.1 Prepare for Upgrade

With the system removed from production mode, the following steps should be performed:

1. Disable the SCFS and PFS file systems as follows:
   ```
   atlas0# pfsmgr offline all
   ```
   Once this has completed successfully, and the PFS file systems are offline on all nodes (check that systems are offline on all nodes by using the command `pfsmgr show`), configure out `pfs.mod` as follows:
   ```
   atlas0# scrun -n all /sbin/sysconfig -u pfs
   ```
   There is no need to build or deploy kernels or reboot any nodes at this time.

   Then, mark the SCFS filesystems offline as follows:
   ```
   atlas0# scfsmgr offline all
   ```
   The SCFS and PFS filesystems will now be automatically unmounted. You should use `scfsmgr` repeatedly until all filesystems are shown as unmounted.
2. If present de-install the OTABASE subset (part of Compaq Fortran kit) as follows:
   ```
   atlas0# setld -i |grep OTABASE
   OTABASE219 installed Compaq Compiled Code Support Library #219
   ```

```
atlas0# setld -d OTABASE219
```

You are now ready to perform the Pre-Upgrade Check, as described in Section 4.6.2.2.

4.6.2.2 Perform the Pre-Upgrade Check

Check that the system is now ready to be upgraded using the following commands:

1. Insert the *HP AlphaServer SC System Software CD-ROM* in the disk drive.
2. Mount the CD-ROM as the root user, as follows:
   a. Create a mount point for the CD-ROM, by running the following command:
      ```
      atlas0# mkdir /cdrom
      ```
   b. Mount the CD-ROM as follows:
      ```
      atlas0# mount -r /dev/disk/cdrom0c /cdrom
      ```
3. Change to the directory in which the kits are stored, as follows:
   ```
   atlas0# cd /cdrom/kits
   ```
4. Run the following command:
   ```
   atlas0# ./upgrade_check /tmp/upgrade_check.log
   ```

If `upgrade_check` finds conditions that would cause the upgrade to fail, it will report it to standard output (`stdout`) with a suggestion on how to correct the problem. Refer to Appendix E.5 for a list of tests generated from the `upgrade_check` command.

Do not proceed with the upgrade procedure until all tests within this audit are successful. Make whatever corrections are necessary to resolve any issues identified.

A detailed log of what actions `upgrade_check` performs to test the system is recorded in `/var/sra/adm/log/InstallSC/upgrade_check.log`, if no logfile is specified on the command line.

Once all tests are successful, you are ready to Back Up the SC Database, as described in Section 4.6.2.3.

4.6.2.3 Back Up the SC Database

In HP AlphaServer SC Version 2.6, the `msql` daemon underlying the SC database has been updated. In order to preserve the existing data, it is necessary to backup the current SC database to a file and restore from this file later in the upgrade process.

To back up the SC database, perform the following steps:

1. Insert the *HP AlphaServer SC System Software CD-ROM* in the disk drive.
2. Mount the CD-ROM as the root user, as follows:
   a. Create a mount point for the CD-ROM, by running the following command:
      ```
      atlas0# mkdir /cdrom
      ```

b. Mount the CD-ROM as follows:
```
atlas0# mount -r /dev/disk/cdrom0c /cdrom
```

3. Change to the directory in which the kits are stored, as follows:
```
atlas0# cd /cdrom/kits
```

4. Run the following command:
```
atlas0# ./sc_pre_upgrade
```

You are now ready to install the upgrade subset on the first domain, as described in Section 4.6.2.4.

4.6.2.4 Install the Upgrade Subset on the First Domain

To install the HP AlphaServer SC Upgrade subset on the first domain, perform the following steps:

1. Insert the *HP AlphaServer SC System Software CD-ROM* in the disk drive.
2. Mount the CD-ROM as the root user, as follows:
   a. Create a mount point for the CD-ROM, by running the following command:
   ```
   atlas0# mkdir /cdrom
   ```
   b. Mount the CD-ROM as follows:
   ```
   atlas0# mount -r /dev/disk/cdrom0c /cdrom
   ```
3. Change to the directory in which the kits are stored, as follows:
```
atlas0# cd /cdrom/kits
```
4. Delete the existing HP AlphaServer SC Upgrade subset as follows:
```
atlas0# setld -i |grep SRAUPG
SRAUPG290 installed AlphaServer SC Upgrade Utilities
atlas0# setld -d SRAUPG290
```
   As the subset is being deleted, you may receive a warning message such as:
```
The following subsets need "AlphaServer SC Upgrade Utilities V2.5-UK1-
9073" (SRAUPG290) to operate correctly:
      AlphaServer SC Patch V2.5-UK1-UK1100121 (SCV25UK1100121)
Are you sure you wish to delete "AlphaServer SC Upgrade Utilities V2.5-
UK1-9073" (SRAUPG290)? (y/n):
```
   You should confirm that you do wish to delete the existing upgrade subset.
5. Install the new HP AlphaServer SC Upgrade subset, as follows:
```
atlas0# cd SRA
atlas0# setld -l . SRAUPG300
```

You are now ready to disable cookies, as described in Section 4.6.2.5.

4.6.2.5 Disable Cookies

Before upgrading the first domain, you should disable the `msql` cookie mechanism by running the following command on rmshost:

```
atlas0# sra cookie -enable no
```

To check if cookies are disabled, run the following command:

```
atlas0# sra cookie
```

You are now ready to configure the RIS server, as described in Section 4.6.2.6.

4.6.2.6 Configure the RIS Server

The upgrade of the Tru64 UNIX operating system on each domain will be performed using a Remote Installation Services (RIS) server. Load the Tru64 UNIX V5.1B operating system into the RIS environment as follows:

1. Insert the *Tru64 UNIX Version 5.1B Operating System Volume 1 CD-ROM* in the disk drive.
2. Mount the CD-ROM as the root user, as follows:
   a. Create a mount point for the CD-ROM, by running the following command:
      ```
      atlas0# mkdir /cdrom
      ```
   b. Mount the CD-ROM as follows:
      ```
      atlas0# mount -r /dev/disk/cdrom0c /cdrom
      ```
3. Run the `ris` command as the `root` user, as follows:
   ```
   atlas0# ris
   ```
4. Choose the `Install software products` option by entering `i` at the prompt:
   ```
   Enter your choice: i
   ```
5. The RIS Installation menu displays the installation options. Choose option `1`, the `Install software into a new area` option.
6. Enter the full pathname for the distribution media, as follows:
   ```
   Enter the device special file name or the path of the directory
   where the software is located
   (for example, /mnt/ALPHA/BASE): /cdrom/ALPHA/BASE
   ```
7. Choose the standard boot method.
8. Choose to extract the software from the *Tru64 UNIX Version 5.1B Operating System Volume 1 CD-ROM*.
9. Choose to install all mandatory and all optional subsets. You will need to go through a number of pages of options before selecting this option.
10. Enter `y` to confirm that the subset list is correct. The subset extraction process begins.

You are now ready to update the Tru64 UNIX Operating System, as described in Section 4.6.2.7.

4.6.2.7 Update the Tru64 UNIX Operating System

To update the first domain, perform the following steps:

1. Attach to the console of the first node of the first domain.
2. Unpack the latest Tru64 UNIX patch kit tar file in the `/patches` directory.

   The operating system patch software kit (`T64V51BB24AS0003-20030929.tar`) is available from the following location:
   `<http://www.itrc.hp.com/>`

   or from your local HP support representative.
3. Insert the *HP AlphaServer SC System Software CD-ROM* in the disk drive.
4. Mount the CD-ROM as the root user, as follows:
   a. Create a mount point for the CD-ROM, by running the following command:
      `atlas0# mkdir /cdrom`
   b. Mount the CD-ROM as follows:
      `atlas0# mount -r /dev/disk/cdrom0c /cdrom`
   c. Create a directory for the HP AlphaServer SC subsets as follows:
      `atlas0# mkdir /usr/sckit`
   d. Change to directory `cdrom` as follows:
      `atlas0# cd /cdrom`
   e. Copy the files to that location as follows:
      `atlas0# tar cf - . | (cd /usr/sckit; tar xvf -)`
   f. Unmount the CD-ROM as follows:
      `atlas0# cd /; umount /cdrom`
5. Insert the *Tru64 UNIX Version 5.1B Operating System Volume 1 CD-ROM* into the disk drive.
6. Mount the CD-ROM as the root user, as follows:

   ```
   atlas0# mount -r /dev/disk/cdrom0c /cdrom
   ```
7. Perform an upgrade check on the first domain as follows (approx 2 minutes duration):

   ```
   atlas0# sc_upgrade check -cd /cdrom
   ```

   If any errors are reported, take the appropriate steps to correct the situation. If any changes are required, run the command once again.
8. Begin the upgrade of the first domain as follows (approx 10 minutes duration):

   ```
   atlas0# sc_upgrade setup -sckitdir /usr/sckit/kits \
            -patchdir /patches/patch_kit -cd /cdrom
   ```

   This command will prompt for the root password for the domain. During this process, all other nodes will be halted.

9. Halt Node 0, first ensuring you are connected to the console of Node 0, as follows:

```
atlas0# shutdown -h now
```

10. Boot Node 0 to single-user mode, as follows:

```
P00>>> boot -fl s
```

11. Mount Local Filesystems:

```
atlas0# bcheckrc
```

12. Mount the *Tru64 UNIX Version 5.1B Operating System Volume 1 CD-ROM* as follows:

```
atlas0# mount -r /dev/disk/cdrom0c /cdrom
```

13. Continue the upgrade process, as follows (approx 2.5 hours duration):

```
atlas0# sc_upgrade install -sckitdir /usr/sckit/kits \
        -patchdir /patches/patch_kit -cd /cdrom
```

During this step, all domain members, other than member 1 will be deleted from the domain, the old HP AlphaServer SC software will be removed, the Tru64 UNIX and TruCluster kits will be upgraded, the Tru64 UNIX PK3 will be loaded, and the new HP AlphaServer SC software will be installed onto the system.

14. When the install process is complete, reboot Node 0, as follows:

```
atlas0# shutdown -r now
```

Node 0 will now begin the process of configuring all the new kits and building a new kernel. It will automatically reboot following the kernel build. Once the system reaches multi-user mode, this node will be running the new version of the operating system.

15. In HP AlphaServer SC Version 2.6, the `msql` daemon underlying the SC database has been updated. Earlier in Section 4.6.2.3 the original SC database was backed up to a file. It is now necessary to restore the SC database from this file as follows:

```
atlas0# /usr/sckit/kits/sc_post_upgrade
```

Note:

The `sc_post_upgrade` command will simply restore the existing database. You may see the following warning message:

```
rmstbladm: Warning: table sc_procurve is not present in backup
file
```

The migration of the SC database will introduce this new table and other new database settings required by the HP AlphaServer SC software release.

---

16. New versions of the HP AlphaServer SC software may include new tables, or new fields within existing tables in the SC Database. It is necessary to upgrade your database to include these new tables and fields and to populate them with appropriate data. To migrate the database, log back into the system, and run the following command:

    ```
    atlas0# sc_upgrade_db
    ```

17. It is now necessary to update the new database to reflect the current status of the upgrade procedure. This update is necessary because step 13 above made changes to the first domain that are not reflected in the database.

    Update the database as follows:

    ```
    atlas0# rmsquery "update sc_domain \
             set current_upg_state='Post_Installed' \
             where name='atlasD0' "
    atlas0# rmsquery "update sc_domain set desired_upg_state ='Upgraded' \
             where name='atlasD0' "
    atlas0# rmsquery "update sc_nodes set desired_state='Member_Added' \
             where domain_name='atlasD0' "
    atlas0# rmsquery "update sc_nodes set current_state='CLU_Create' \
             where domain_name='atlasD0' "
    atlas0# rmsquery "update sc_nodes set bootable='0' \
             where domain_name='atlasD0' "
    atlas0# rmsquery "update sc_nodes set current_state='Member_Added' \
             where name='atlas0' "
    atlas0# rmsquery "update sc_nodes set bootable='1' \
             where name='atlas0' "
    ```

18. Continue the upgrade process, as follows (approx 10 minutes duration):

    ```
    atlas0# sc_upgrade post_install
    ```

    At this stage member 1 will be upgraded, however, it will be running in a degraded mode. The script will automatically begin the version switch process, and reboot the lead-node.

19. During the `sc_upgrade` process, all members except the first member of the first domain would have been deleted. You should now add back in these members using the following command:

    ```
    atlas0# sc_upgrade add_member
    ```

20. Configure the preferred server cluster aliases, as follows (approx 2 minutes duration):

    ```
    atlas0# sc_upgrade member_config_aliases
    ```

21. After all members have been added to the domain, they will be shut down. You now need to boot all non-lead members as follows:

    ```
    atlas0# sra boot -nodes 'atlas[1-31]'
    ```

22. Complete the upgrade process, as follows (approx 2 minutes duration):

```
atlas0# sc_upgrade clean
atlas0# rmsquery "update sc_domain \
         set current_upg_state='Upgraded' \
         where name='atlasD0' "
```

This will remove all files no longer required and update the current upgrade state in the database. At this point, the first domain is upgraded.

You are now ready to register RIS clients for the New RIS Environment, as described in Section 4.6.2.8.

4.6.2.8 Register RIS Clients for the New RIS Environment

Register all domain members as clients of Tru64 UNIX V5.1B, as follows:

```
atlas0# sra edit
sra> sys
sys> update ris all
```

Note:

In response to the `sra` command above and in response to subsequent `sra` commands, you may receive ongoing warnings to upgrade the SC Database. These warnings should be ignored, and once all domains have been upgraded, the procedure as described in Section 4.7.2 will be used to upgrade the database revision.

You are now ready to upgrade the remaining domains, as described in Section 4.7.

4.7 Upgrading the Domains

If you have not already upgraded the management server, clustered management server, or first domain (for systems with no management server), please do so now. See Section 4.4, Section 4.5 and Section 4.6 for more information.

Once the management server, clustered management server, or first domain (for systems with no management server) is updated, the steps in this section can be followed to back up and subsequently upgrade the remaining domains.

In this section, the term management server is used frequently. In the case where there is a clustered management server, then you can run the upgrade commands from either node of the clustered management server. In the case where there is no management server, then the first node of the first domain should be substituted for each occurrence.

It is recommended that you perform all of the following steps on the console of the management server. This will ensure that the commands are not interrupted by network events, and the screen output of the commands will be preserved for subsequent review if required.

At this point in the upgrade, the management server is running the latest software. However, some features of the software will only be fully functional when all of the domains are upgraded to the same level of software (for example, RMS and scrun). Do not use these software features until you have upgraded all of the domains. The commands in this section do not rely on these features.

The steps to upgrade the domains are as follows:

1. Back Up the Domains (see Section 4.7.1 on page 4–38)
2. Upgrade all of the Domains (see Section 4.7.2 on page 4–39)

4.7.1 Back Up the Domains

Before proceeding with the upgrade, you need to perform a backup of all the domains. When performing a backup of all the domains to the backup cluster disk, ensure that the backup cluster disk is the same size as the cluster disk to avoid any backup storage problems. For more information on disk layout for backup storage, see Section 2.4.1.

The backup process will archive one kernel image per domain as opposed to one image per domain member. It will archive the `genvmunix` kernel.

To ensure that the generic kernel image is up to date on each domain, run the following command:

```
atlasms# sra command -domains all -member 1 -command "BuildKernels"
```

To back up all the domains, run the following command:

```
atlasms# sra upgrade -domains all -backupdev dsk5
```

where `dsk5` corresponds to the disk selected as the backup disk within each domain. Where a different disk is used for different domains, then the individual commands can be run per domain as appropriate.

This command can take perhaps 20 minutes, depending on the size of the `cluster`, `/usr` and `/var` domains.

You should check the console logs of the lead nodes of all domains after completing the `sra upgrade` command for any erroneous messages. Some errors may have occurred that are not visible to the controlling `sra upgrade` command.

You are now ready to upgrade all of the domains, as described in Section 4.7.2.

4.7.2 Upgrade all of the Domains

To upgrade the domains, perform the following steps on the upgraded management server:

1. If the management server has any NFS mounts from the domain, or any domains are NFS mounting from any other domains, please unmount them now as follows:
   ```
   atlasms# mount | grep atlas
   atlasms# umount mountpoint
   ```
2. Log into each domain, and check that all members in each domain are operational as follows:
   ```
   atlasms# sra command -domains all -member 1 \
            -command 'hwmgr -v c | grep DOWN'
   ```
   Boot any members that are identified as not operational. If you are unable to boot members that are not operational, remove the nodes from the domain by running the following command (while logged into the offending domain):
   ```
   atlas0# sra delete_member -nodes atlas5
   ```
   Note:

   The upgrade will fail if all members are not booted when the upgrade begins.
3. On each domain, if present de-install the OTABASE subset (part of the Compaq Fortran kit) as follows:
   ```
   atlas0# setld -i |grep OTABASE
   OTABASE219 installed Compaq Compiled Code Support
   Library #219
   atlas0# setld -d OTABASE219
   ```
4. On each domain, if present de-install the SYSCHECK utility.
   ```
   atlas0# setld -i |grep SYSCHECK
   SYSCHECK128          installed              Syscheck utility
   atlas0# setld -d SYSCHECK128
   ```
5. Unpack the latest Tru64 UNIX patch kit tar file in the `/patches` directory.

   The operating system patch software kit (`T64V51BB24AS0003-20030929.tar`) is available from the following location:
   `<http://www.itrc.hp.com/>`

   or from your local HP support representative.
6. Insert the *HP AlphaServer SC System Software CD-ROM* in the disk drive.
7. Mount the CD-ROM as the root user, as follows:
   a. Create a mount point for the CD-ROM, by running the following command:
      ```
      atlas0# mkdir /cdrom
      ```

b. Mount the CD-ROM as follows:
```
atlas0# mount -r /dev/disk/cdrom0c /cdrom
```

c. Create a directory for HP AlphaServer SC subsets as follows:
```
atlas0# mkdir /usr/sckit
```

d. Change to directory `cdrom` as follows:
```
atlas0# cd /cdrom
```

e. Copy the files to that location as follows:
```
atlas0# tar cf - . | (cd /usr/sckit; tar xvf -)
```

f. Unmount the CD-ROM as follows:
```
atlas0# cd /; umount /cdrom
```

8. Perform an upgrade check on each domain before starting the upgrade (approx 10 minutes duration):

```
atlasms# sra upgrade -domains all -unixpatch /patches/patch_kit \
         -sckit /usr/sckit/kits -endstate Checked -redo Pre_Upgrade
```

where:

`-domains all` specifies that the software should be upgraded on all domains.

`-unixpatch /patches/patch_kit` specifies the directory in which you had unpacked the Tru64 UNIX patch kit software (see step 3 above).

`-sckit /usr/sckit/kits` specifies the directory containing the HP AlphaServer SC software (see step 7 above).

`-endstate Checked` specifies an upgrade check is performed. The check installs the `SRAUPG` subset, if needed, on each domain and then performs the upgrade checks. If a domain fails the check then refer to the console log of member 1.

`-redo Pre_Upgrade` specifies that the upgrade check will start the process from the `Pre_Upgrade` state. Refer to Table 4–1 on page 4–4 for details on the upgrade states.

9. Upgrade each domain as follows (approx 10 hours duration consisting of 5 hours for member1 upgrade, and 5 hours for re-adding remaining members):

```
atlasms# sra upgrade -domains all -unixpatch /patches/patch_kit \
         -sckit /usr/sckit/kits
```

where:

`-domains all` specifies that the software should be upgraded on all domains.

`-unixpatch /patches/patch_kit` specifies the directory in which you had unpacked the Tru64 UNIX patch kit software (see step 5 above).

`-sckit /usr/sckit/kits` specifies the directory containing the HP AlphaServer SC software (see step 7 above).

The script starts an automatic upgrade. When the script completes, the domain is upgraded.

Note:

Check the console logs of the domain lead nodes after completing the `sra upgrade` command for any erroneous messages. Some errors may have occurred that are not visible to the controlling `sra upgrade` command.

To check on the upgrade status of the domain, use the following command:

```
atlasms# sra upgrade_info -domains all
```

If you encounter problems during the upgrade, please refer to the section Recover from Failures during an Upgrade (see Section 4.8 on page 4–41).

You are now ready to perform any post-upgrade tasks as described in Post-Upgrade Tasks (see Section 4.9 on page 4–45).

4.8 Recover from Failures during an Upgrade

Upgrade may fail for a variety of reasons, and the failures can normally be divided into four categories: Minor, Medium, Serious, and Severe. For each of these categories, nodes, whole domains, or multiple domains may fail to upgrade. In all cases, an attempt should be made to find the underlying reason for the failure before continuing with the recovery steps outlined below. Checking of console logs and domain/node activity at the time of failures can be a good starting point to finding these reasons and resolving the underlying problems. Once you are satisfied that the problems have been identified and fixed, proceed as in the following sections.

4.8.1 Minor Failures: Re-add Members that Failed to Upgrade

If one or two members failed to upgrade, but the domain reports a `current_upg_state` of `Upgraded` in the `sc_domain` table, you should first check if the members just failed to boot into the newly upgraded domain. This can be checked in the console log of the failing member(s).

If this is the case, you can simply boot the member(s) into the domains as follows:

```
atlasms# sra boot -nodes list of failed nodes
```

If you can determine that the members failed to be re-added to the domain for another reason, but the domain in question is reporting the `current_upg_state` of `Upgraded` in the `sc_domain` table, re-add the failed members as follows:

```
atlasms# sra install -nodes list of failed nodes
```

4.8.2 Medium Failures: Re-run the sra upgrade Command

If the `sra upgrade` command finishes but reports an error on one or more domains, check the `current_upg_state` in the `sc_domain` table for the domain in question.

Based on the `current_upg_state`, and with the help of the lead node console logs, you should try and determine what caused the upgrade to stop. If possible, the problem should be resolved before continuing. Once the problem is identified and resolved, run the upgrade command again as in the following example:

```
atlasms# rmsquery -v
sql> select name,startnode,current_upg_state,desired_upg_state from sc_domain
name            startnode current_upg_state desired_upg_state
-------         --------- ----------------- -----------------
atlasD0         0               Null            Null
atlasD1         2               Null            Null
atlasD2         4               Setup           Upgraded
atlasD3         6               Upgraded        Upgraded
```

In this example, domain `atlasD2` is still at the `Setup` stage, while domain `atlasD3` has completed the upgrade. To restart the upgrade for the `atlasD2` domain, run the following command:

```
atlasms# sra upgrade -domains atlasD2 -unixpatch /patches/patch_kit \
        -sckit /cdrom /kits
```

Note:

If you are not using the management server as the RIS server, you need to specify the RIS server using the optional `-rishost` *`name-of-ris-server`* option in the `sra upgrade` command.

This command will pick up the current upgrade state for `atlasD2` from the `sc_domain` table as described above, and continue the upgrade process from that point.

4.8.3 Serious Failures: Recover from Backup

If you encounter severe problems during an upgrade that cannot be overcome by the instructions in Section 4.8.1 or Section 4.8.2 above, you may have to restore the domain from the backup created in Section 4.6.1 or Section 4.7.1.

Unlike the other recovery methods mentioned above, you will need to restore from backup before fixing the underlying problems and repeating the upgrade process. If the system was originally upgraded from HP AlphaServer SC Version 2.0, Version 2.4, or Version 2.4A, then `/var/sra` should be added to the `/etc/exports` file on the management server before starting the restore operation, and removed after the restore operation has been completed.

The following severe failure may occur:

- If the lead member is rebooted during the `setup` phase of upgrade (for example, power outage, or accidental shutdown), then subsequent attempts to boot the lead member again will result in the panic:
  `ics_elan: elan device does not appear to be configured`

  This happens because the old HP AlphaServer SC software is already removed from the system and therefore the `elan.mod` kernel module is gone from the system. This kernel module is required by TruCluster when the lead member boots, and this is why TruCluster causes the panic.

  The recovery action at this point is to restore the cluster from backup and start the upgrade again.

  For further potential problems, you should read the current version of the *HP AlphaServer SC Release Notes*, particularly any information about upgrade installations. You should also check with your account representative so that you are aware of any *HP AlphaServer SC Support Bulletins* relating to the upgrade procedure.

To recover from backup, perform the following steps for each failed domain:

1. Halt the domain by running the following command:
   `atlasms# sra reset -dom name-of-domain`
2. Connect to the console of the lead node
3. Boot the lead node using the Tru64 UNIX disk (standalone):

   ```
   P00>>> boot dka200
   ```

4. When the prompt is displayed, log in to the lead node as `root`.
5. Restore the previous version of the operating system from backup as follows:

   To restore using `/dev/disk/dsk5` as the restore device:
   `# /usr/opt/sra/bin/sra_cluster_backup -disk dsk5 restore`

   This will restore the `cluster /, /usr, and /var` filesystems, restore the boot partition of the lead node and the CNX partition.

   Note:

   When restoring a domain from backup, if you encounter any errors reporting that the backup `cluster /, /usr, and /var` filesystems do not exist, refer to the troubleshooting item Restoring from Backup Can Sometimes Fail (see Section 11.21.8 on page 11–25).

   It will then RIS boot the other nodes and restore their boot and CNX partition. Following this, these nodes will be halted.

Note:

During the risRestoreOldBootPartition step, you will be prompted for a root password.

6. Shut down the lead node as follows:

   ```
   # shutdown -h now
   ```

7. Disconnect from the console of the lead node.

8. Update the `sc_nodes` table to ensure that all nodes in the domain are set to bootable as follows:

   ```
   atlasms# rmsquery "update sc_nodes set bootable='1' \
            where domain_name='name-of-domain'"
   ```

9. Query the `sc_domain` table to ensure that the `current_upg_state` of each domain is set to `Pre_Upgrade` as follows:

   ```
   atlasms# rmsquery "update sc_domain set current_upg_state='Pre_Upgrade' \
            where name='name-of-domain'"
   ```

10. Boot the domain as follows:

    ```
    atlasms# sra boot -domain name-of-domain
    ```

    At this stage, the domain will have been restored to the backups created earlier.

    If you intend to repeat the upgrade process on the domain, you should fix the problems with the upgrade, and then restart the upgrade procedure on this domain. When restarting the upgrade process, it is not necessary to repeat the backup of the domain just restored. Instead, you should restart the upgrade process from the step immediately after the domain backup process, specifically Section 4.6.2 or Section 4.7.2 as appropriate.

4.8.4 Severe Failures: Full System Restoration

If at any point you decide to defer the entire system upgrade until another time, and return the system to production using the original software image, then you should proceed as follows:

1. Restore all domains from their backups, as described on Section 4.8.3.

2. The RMS startup script should be restored on each domain, the new customized kernels should be built, and the domains should be rebooted as follows:

   ```
   atlasms# sra command -domains all -member 1 \
            -command "mv /sbin/init.d/rms.disabled /sbin/init.d/rms"
   atlasms# sra command -domains all -member 1 \
            -command "BuildKernels"
   atlasms# sra command -domains all -member 1 \
            -command "DeployKernels -g"
   ```

```
atlasms# sra shutdown -domains all
```

3. For systems with a management server or management server cluster, once the above steps have been completed on the domains, you must restore the management server to its original image using the backups created in Section 4.4.1 or Section 4.5.1.
4. Once the management server is running the old software, you should boot all domains as follows:

   ```
   atlasms# sra boot -domains all
   ```

At this point, the system will be running the original software on both the management server and on the domains. To conclude the system restoration, you should mount the SCFS and PFS file systems and you should configure in the nodes into the RMS partitions and start the RMS partitions.

4.9 Post-Upgrade Tasks

Once the upgrade has been completed, the following post-upgrade tasks should be performed:

1. Create Alternate Boot Partitions (see Section 4.9.1 on page 4–46)
2. Upgrade the Database Revision (see Section 4.9.2 on page 4–46)
3. Re-Add Members Deleted prior to Upgrade (see Section 4.9.3 on page 4–46)
4. Re-enable MSQL Cookie Mechanism (see Section 4.9.4 on page 4–46)
5. Upgrade the SCFS and PFS Filesystem Management Data (see Section 4.9.5 on page 4–46)
6. Add the cmf Archive entry into crontab (see Section 4.9.6 on page 4–47)
7. Add the rms Archive entry into crontab (see Section 4.9.7 on page 4–47)
8. Verify Network Configuration (see Section 4.9.8 on page 4–48)
9. Check that Members 2 and 3 Have a Vote (see Section 4.9.9 on page 4–48)
10. Configure Nodes into RMS Partitions (see Section 4.9.10 on page 4–48)
11. Configure and Diagnose the Interconnect (see Section 4.9.11 on page 4–48)
12. Setting Up the SC Monitor System (see Section 4.9.12 on page 4–48)
13. Assigning Cabinets in the SC Database (see Section 4.9.13 on page 4–48)
14. Reinstall Uninstalled Kits (see Section 4.9.14 on page 4–49)
15. Installing LSF for HP AlphaServer SC (see Section 4.9.15 on page 4–49)
16. Build and Deploy Generic Kernels (see Section 4.9.16 on page 4–49)

4.9.1 Create Alternate Boot Partitions

If alternate boot disks are in use, then update the alternate boot partitions on all nodes in the system, by running the following command from the management server (or `rishost`):

```
atlasms# sra copy_boot_disk -nodes all
```

For more information on this command, refer to the *HP AlphaServer SC System Administration Guide*.

4.9.2 Upgrade the Database Revision

The database migration performed in Section 4.4.2.11 does not upgrade the database revision.

To upgrade the database revision, run the following command on the management server (or `rishost`):

```
atlasms# sc_upgrade_db -rev
```

4.9.3 Re-Add Members Deleted prior to Upgrade

Before the upgrade, some members may have been deleted. Add those members back in now by running the following command:

```
atlasms# sra install -nodes list of nodes
```

4.9.4 Re-enable MSQL Cookie Mechanism

To check if the cookie mechanism needs to be re-enabled, run the following command from the management server (or `rishost`):

```
atlasms# sra cookie
MSQL cookies are currently disabled
```

If the message above is displayed, run the following command:

```
atlasms# sra cookie -enable yes
```

For more information on this command, refer to Chapter 3 of the *HP AlphaServer SC System Administration Guide*.

4.9.5 Upgrade the SCFS and PFS Filesystem Management Data

When upgrading from HP AlphaServer SC Version 2.5 and Version 2.5 (UK1) to HP AlphaServer SC Version 2.6, a script is provided to perform the following steps:

- Check and report unused inodes on each PFS filesystem.
- Correct unused inodes on each PFS filesystem and create `.pfsbirth` and `.pfsdeath` directories (as required in HP AlphaServer SC Version 2.6 PFS filesystems).

The script must be run in order to resolve potential difficulties with the format of the PFS data, before re-enabling the PFS filesystems.

Before you run the script, mark each underlying PFS component filesystem online, and mark each PFS filesystem offline as follows:

```
atlasms# scfsmgr online all
atlasms# pfsmgr offline all
```

Run the script as follows:

```
atlasms# /usr/opt/sra/bin/sc_fsck
```

The script will provide feedback and prompt for confirmation before each action.

The script will initially scan each PFS for potential problems. If the PFS is already clear of potential problems, then you will simply see the following output from PFS scan:

```
atlasD0: ***** Phase 0:      Check control files       *****
atlasD0: ***** Phase 1:    Fast Check File Stripes     *****
```

If no problems are reported, you can skip the fix step for a given PFS.

If potential problems are reported, you should allow the `sc_fsck` script to fix the problems.

When the script completes, the PFS filesystems will be ready for use. You should mark each PFS filesystem online as follows:

```
atlasms# pfsmgr online all
```

See Chapter 7 and Chapter 8 of the *HP AlphaServer SC System Administration Guide* for more information on using the `scfsmgr` and `pfsmgr` commands.

4.9.6 Add the cmf Archive entry into crontab

The console log files can be archived automatically by adding the following `crontab` entry:

```
0 20 13,27 * * /sbin/init.d/cmf rotate
```

This will result in the console log files being archived on the 13th and 27th day of the month.

4.9.7 Add the rms Archive entry into crontab

The RMS database tables can be archived automatically by adding the following crontab entry:

```
5 2 * * * /usr/bin/rmsbackup
```

This will result in the RMS database tables being archived and backed up at 2:05am every day.

4.9.8 Verify Network Configuration

During post upgrade you should verify your network configuration. For more information on default route configuration, refer to Chapter 22 of the *HP AlphaServer SC System Administration Guide*.

For more information, on preferred server aliases, refer to Chapter 19, of the *HP AlphaServer SC System Administration Guide*.

4.9.9 Check that Members 2 and 3 Have a Vote

At the start of the upgrade process all members votes, except member1, are removed. The process re-adds the member votes in the upgrade 'clean' phase. However, this step can fail for a number of reasons. Check that members 2 and 3 have a vote using the `clu_quorum` command.

4.9.10 Configure Nodes into RMS Partitions

During the upgrade, all nodes in the domains will be automatically configured out of the RMS partitions. These nodes should now be configured back in using the command:

```
atlasms# rcontrol configure in nodes "atlas[0-1023]"
```

4.9.11 Configure and Diagnose the Interconnect

In HP AlphaServer SC Version 2.6 a new release of HP AlphaServer SC Interconnect Control Processor Software is included. For correct operation of the switch management and diagnostics, it is important that you deploy this software now. Please complete the instructions documented in Chapter 7 of the *HP AlphaServer SC Interconnect Installation and Diagnostics Manual*.

4.9.12 Setting Up the SC Monitor System

For systems with a management server, please complete the instructions documented in Set Up the SC Monitor System (see Section 5.6 on page 5–48).

For systems without a management server, please complete the instructions documented in Set Up the SC Monitor System (see Section 6.6 on page 6–35).

4.9.13 Assigning Cabinets in the SC Database

For systems with a management server, please complete the instructions documented in Assign Cabinets in the SC Database (see Section 5.7 on page 5–51).

For systems without a management server, please complete the instructions documented in Assign Cabinets in the SC Database (see Section 6.7 on page 6–37).

4.9.14 Reinstall Uninstalled Kits

During the upgrade, you may have needed to uninstall kits such as PFSMOD, OTABASE, SYSCHECK, and System Event Analyzer/WEBES from your management server (if your system has a management server) and your domains. Re-install any uninstalled kits now.

4.9.15 Installing LSF for HP AlphaServer SC

A new release of Platform Computing Corporation's LSF® software ("LSF") is included in HP AlphaServer SC Version 2.6. Please refer to Chapter 9 for details on how to deploy this new release of LSF.

4.9.16 Build and Deploy Generic Kernels

Once you are satisfied that the upgrade was successful and your applications are running smoothly for approximately 24 hours, it is recommended that you deploy the new generic kernels globally. If you don't do this, then a `delete member` followed by re-install of that member will end up trying to boot initially on a non-compatible generic kernel.

From the management server (or Node 0 if you do not have a management server), run the following commands:

```
atlasms# scrun -d all "BuildKernels"
atlasms# scrun -d all "DeployKernels -g"
```

This will build and deploy the generic kernels to all members of all domains.

You have now completed the Upgrade Installation Procedure.

5

Installing: When the System Has a Management Server

This chapter describes how to install a HP AlphaServer SC system that has a management server.

Note:

If your system does not have a management server at installation time, do not use this chapter — refer to Chapter 6 (*Installing: When the System Does Not Have a Management Server*) instead.

If you wish to add a management server to an HP AlphaServer SC system later — that is, after domain creation — use the checklist provided in Appendix C to ensure that you complete all installation tasks in the correct order.

Note:

If your system has a clustered management server, refer to Section 5.1.7.

When installing software on an HP AlphaServer SC system that has a management server, install the software on the management server first (see Chapter 1 of the *HP AlphaServer SC System Administration Guide* for more information about management servers).

The information in this chapter is structured as follows:

- Set Up the Management Server (see Section 5.1 on page 5–2)
- Set Up the SC Database (see Section 5.2 on page 5–36)
- Configure Out All Nodes During Installation (see Section 5.3 on page 5–44)
- Check All Nodes in the HP AlphaServer SC System (see Section 5.4 on page 5–44)
- Configure and Diagnose the HP AlphaServer SC Interconnect (see Section 5.5 on page 5–46)

- Set Up the SC Monitor System (see Section 5.6 on page 5–48)
- Assign Cabinets in the SC Database (see Section 5.7 on page 5–51)

Note:

Use the checklist provided in Appendix A, to ensure that you complete all installation tasks in the correct order.

5.1 Set Up the Management Server

Setting up the management server involves the following tasks:

- Set the Console Variables (see Section 5.1.1 on page 5–3)
- Check the System Firmware (see Section 5.1.2 on page 5–4)
- Creating Bootable Devices on EMA/EVA Storage (see Section 5.1.3 on page 5–4)
- Install the Tru64 UNIX Operating System (see Section 5.1.4 on page 5–6)
- Customize the System Configuration (see Section 5.1.5 on page 5–10)
- Install the Operating System Patch Software (see Section 5.1.6 on page 5–22)
- Install and Configure the Clustered Management Server (see Section 5.1.7 on page 5–22)
- Configure the RIS Server (see Section 5.1.8 on page 5–31)
- Install the HP AlphaServer SC System Software (see Section 5.1.9 on page 5–32)
- Install the HP Fortran Run-Time Libraries (see Section 5.1.10 on page 5–33)
- Install Layered Products (Optional) (see Section 5.1.11 on page 5–33)
- Install the SANworks Storage System Scripting Utility (see Section 5.1.12 on page 5–33)
- Define the RMS Master Node (rmshost) (see Section 5.1.13 on page 5–34)
- Build the New Kernel and Reboot (see Section 5.1.14 on page 5–35)

5.1.1 Set the Console Variables

Before installing the Tru64 UNIX operating system on the management server, you must configure the system console. Display the SRM console prompt on the management server as follows:

- If your system has a factory-installed software (FIS) kernel, it will automatically start to boot the Tru64 UNIX operating system at power on. When prompted to continue this boot, enter `No` to return to the SRM console prompt.
- If your system does not have a FIS kernel, the system will display the SRM console prompt at power on.

To set the console variables, enter (at the SRM console prompt) the commands in Table 5–1.

Table 5–1 Setting the Console Variables

```
P00>>> set auto_action HALT
P00>>> set eia0_mode FastFD
P00>>> set eib0_mode[1] FastFD[2]
P00>>> set boot_osflags A
P00>>> set boot_reset off
P00>>> set os_type UNIX
P00>>> set console serial
P00>>> set sys_com1_rmc off
P00>>> set ocp_text nodename[3]
P00>>> set bootdef_dev ''
P00>>> set pci_parity on
```

[1] You need only set the `eib0_mode` variable on nodes that have an external network interface. You should set the `eia0_mode` variable on all nodes, for the management network.

[2] When setting the `eib0_mode` variable, specify the appropriate network speed.

[3] You may not need to set the `ocp_text` variable on the management server.

The remaining console variables for the management server, and all console variables for the remaining nodes, are automatically set during the installation process (see Section 5.2, step 20 on page 5–41).

For more information about the SRM console, see Chapter 2 of the *HP AlphaServer ES40 Owner's Guide*.

You are now ready to check the system firmware, as described in Section 5.1.2.

5.1.2 Check the System Firmware

Table 5–2 lists the minimum firmware versions supported by HP AlphaServer SC Version 2.6 for management servers. If the management server is HP AlphaServer ES40 or HP AlphaServer ES45 based, then the minimum firmware revisions are given in Table 5–11.

Table 5–2 Minimum System Firmware Versions

Firmware Version	HP AlphaServer DS20E
SRM Console	6.2-1
OpenVMS PALcode	1.96-77
Tru64 UNIX PALcode	1.90-72
Serial ROM	1.13-44

Check that the management server meets these minimum system firmware requirements, by entering the `show config` command at the SRM prompt.

If necessary, update the system firmware, as described in Chapter 21 of the *HP AlphaServer SC System Administration Guide*.

You are now ready to create bootable devices on EMA/EVA storage, as described in Section 5.1.3.

5.1.3 Creating Bootable Devices on EMA/EVA Storage

If your target management server is a standalone one, then you should skip this section and proceed to Section 5.1.4.

If your target management server is a cluster without a local disk, the target disk for the initial Tru64 installation is located on the EMA or EVA storage system.

Note:

It is assumed that you have already performed the steps in Configure the EMA/EVA Storage System in Section 3.15 and Section 3.16.

Before installing Tru64 UNIX from the installation CD-ROM, perform the following steps to create the SRM boot variable for the target disk based on the EMA/EVA storage system:

1. Initialize the hardware as follows:
   ```
   P00>>> init
   ```

2. On node 0 of the management cluster, locate the virtual disks presented to this system by the EVA storage system as follows:

```
P00>>> wwidmgr -show wwid
[0] UDID: 1 WWID:01000010:6005-08b4-0001-0130-0001-a000-014f-0000(ev:none)
[1] UDID: 2 WWID:01000010:6005-08b4-0001-0130-0001-a000-0154-0000 (ev:none)
[2] UDID: 3 WWID:01000010:6005-08b4-0001-0130-0001-a000-0159-0000 (ev:none)
[3] UDID: 4 WWID:01000010:6005-08b4-0001-0130-0001-a000-015e-0000 (ev:none)
[4] UDID: 5 WWID:01000010:6005-08b4-0001-0130-0001-a000-0163-0000 (ev:none)
```

3. Check the UDID numbers against the OS_UNIT_ID parameters used in the Chapter 3 for EMA/EVA.

   For the example given in Create Virtual Disk Units for the Management Cluster (see Section 3.16.2.3 on page 3–49), the UDID numbers are assigned as follows:

```
UDID:1 Cluster File System (/, /usr/, /var)
UDID:2 quorum disk
UDID:3 Initial Tru64 disk
UDID:4 node0 boot disk
UDID:5 node1 boot disk
```

4. Assign a `wwid` environment variable to the target disk for the initial Tru64 UNIX installation as follows:

```
P00>>> wwidmgr quickset -udid 3
```

   Disk assignment and reachability after next initialization:

```
6005-08b4-0001-0130-0001-a000-015e-0000
                          via adapter:         via fc nport:        connected:
dga3.1001.0.9.0           pga0.0.0.9.0         5000-1fe1-0013-a3c8      No
dga3.1002.0.9.0           pga0.0.0.9.0         5000-1fe1-0013-a3cd      Yes
P00>>>
```

5. Assign a `wwid` environment variable to the target boot disk, to be used by the `clu_create` command, as follows:

```
P00>>> wwidmgr -quickset -udid 4
```

   Disk assignment and reachability after next initialization:

```
6005-08b4-0001-0130-0001-a000-015e-0000
                          via adapter:         via fc nport:        connected:
dga3.1001.0.9.0           pga0.0.0.9.0         5000-1fe1-0013-a3c8      No
dga3.1002.0.9.0           pga0.0.0.9.0         5000-1fe1-0013-a3cd      Yes

6005-08b4-0001-0130-0001-a000-014f-0000
                          via adapter:         via fc nport:        connected:
dga4.1001.0.9.0           pga0.0.0.9.0         5000-1fe1-0013-a3c8      No
dga4.1002.0.9.0           pga0.0.0.9.0         5000-1fe1-0013-a3cd      Yes
P00>>>
```

6. Re-initialize the hardware as follows:

```
P00>>> init
```

The system is now ready for Tru64 UNIX installation.

Caution:

At Tru64 UNIX installation time, select the disk with IDENTIFIER=3. Remember that IDENTIFIER=4 is the target boot disk for the clusterized node. The target installation has to be labelled. Refer to Table 5–3 for the recommended partition layout. On node 1, create the SRM boot device for the target boot disk for UDID 5, as described above.

You are now ready to install the Tru64 UNIX operating system, as described in Section 5.1.4.

5.1.4 Install the Tru64 UNIX Operating System

Install the Tru64 UNIX operating system on the management server, from the *Tru64 UNIX Version 5.1B Operating System Volume 1 CD-ROM*, as described here and in the *HP Tru64 UNIX Installation Guide*.

1. Insert the *Tru64 UNIX Version 5.1B Operating System Volume 1 CD-ROM* into the disk drive.
2. This step only applies to clustered management servers. For clustered management servers, shared storage will be used for management server disks. The actual quantity of disks required is shown in Figure 3–2 on page 3–3. Before proceeding to the next step of the Tru64 UNIX operating system installation, you should follow your appropriate hardware documentation to make these shared disks visible as bootable devices to this management server. For example, the use of `wwidmgr` may be required for shared Fiber Channel storage as described in Section 5.1.3. Once the disks are visible from the SRM `show dev` command, you can proceed to the next step.
3. Initialize the hardware, as follows:
   ```
   P00>>> init
   ```
4. Identify the CD-ROM device name by running the following SRM console command:
   ```
   P00>>> show device
   ```
   The *show device* command produces the following output:
   ```
   dka0.0.0.1.1          DKA0          COMPAQ BD018122C9 B016
   dka100.1.0.1.1        DKA100        COMPAQ BD018122C9 B016
   dka200.2.0.1.1        DKA200        COMPAQ BD018122C9 B016
   dqa0.0.0.15.0         DQA0          COMPAQ CDR-8435  0013
   dva0.0.0.1000.0       DVA0
   eia0.0.0.2004.1       EIA0          00-50-8B-CF-46-CC
   eib0.0.0.2005.1       EIB0          00-50-8B-CF-46-CD
   pga0.0.0.3.1          PGA0          WWN-1000-0000-C922-391A
   pka0.7.0.1.1          PKA0          SCSI Bus ID 7
   ```
   In this example, the CD-ROM device name is *dqa0*.

5. Enter the following command at the SRM console prompt, to display the installation user interface:
   ```
   P00>>> boot dqa0
   ```
   The system boot process can take several minutes. Several hardware-specific messages are displayed. The more complex the system (many peripheral devices, and so on), the longer the boot process takes.

Upon successful system boot, the installation user interface appears. The type of user interface presented during installation depends on the hardware configuration:

- Systems equipped with graphics consoles present a graphical user interface.
- Systems with consoles that do not have graphics capabilities present a text-based, menu-driven user interface.

The information you supply is the same regardless of the type of user interface, but the order in which it is requested may be different. This guide documents the graphical user interface.

Follow these guidelines:

1. When prompted to select a language in which to view the user interface, choose `United States English`.
2. The Installation Welcome dialog box appears. Click on the Next button.
3. The Host Information dialog box appears. You must set several values on this screen, as follows:
   a. Set the host name. The host name should be the same as the network interface for the management network. For example, if the system name is `atlas`, the host name should be `atlasms`.
   b. Set the area.
   c. Set the location.
   d. Set the date.
   e. Set the time.

   Click on the Next button.
4. The Set root Password dialog box appears. Set the root password for the system. The same root password is used for all nodes. Click on the Next button.
5. The Software Selection dialog box appears. You must set the value on this screen as follows:
   a. Choose "All Software" when prompted for the software that you wish to install.

   Click on the Next button.

6. The Kernel Options dialog box appears, prompting you to choose the type of kernel components to build into the kernel. Select `Customize` (you will choose the individual kernel options in step 13). Click on the Next button.
7. The Select File System Layout dialog box appears. Select `Customize File System Layout` and click on the Next button.
8. The Custom File System Layout dialog box appears. You must set several values on this screen, as follows:
   a. Set the Use LSM option to `No`.

      You must not use LSM at this stage; instead, configure LSM after all nodes have been added to the domain — see Section 8.10 on page 8–18.

   b. Configure the recommended partition layout for the system disk.

      Table 5–3 shows the recommended partition layout for an 18GB system disk, and for a 36GB disk, on a management server.

Table 5–3 Recommended Partition Layout for Management Server System Disk

File System	Disk	Partition	Size for an 18GB Disk	Size for a 36GB Disk	Type
root	dsk0	a	384MB	384MB	AdvFS
/usr	dsk0	d	5.4GB	11.1GB	AdvFS
swap1	dsk0	f	5.4GB	11.1GB	swap
/var	dsk0	e	5.4GB	11.1GB	AdvFS

   See Chapter 6 of the *HP Tru64 UNIX Installation Guide* for more information about customizing the file system layout.
9. When you have entered all of the required information, click on the Next button.
10. The Installation Summary dialog box appears. Review the information on this screen. To change any values, click on the Reset button. When the information is correct, click on the Finish button.
11. The Ready to Begin Installation dialog box appears. Click on the OK button. The system saves the configuration, creates the file systems, and loads the software.
12. The system then automatically reboots from the system disk.

13. Software configuration occurs automatically after your system reboots. The Kernel Option Selection dialog box appears. You must select at least the options listed in Table 5–4.

Table 5–4 Minimum Kernel Options

Selection	Kernel Option
2	NTP V3 Kernel Phase Lock Loop (NTP_TIME)
3	Kernal Breakpoint Debugger (KDEBUG)
4	Packetfilter driver (PACKETFILTER)
12	ISO 9660 Compact Disc File System (CDFS)

If you need to install a kernel component after installation is complete, use the `doconfig(8)` command. See the *HP Tru64 UNIX Installation Guide* for more information.

14. When prompted to edit the configuration file, select `No`.
15. The kernel build procedure automatically begins after software configuration.
16. After the kernel build, the system reboots automatically.
17. The final step is to log into the newly installed system as the `root` user. (You may see warnings about missing license PAKs for OSF-BASE — you can ignore these until Section 5.1.5.1 on page 5–10.)

    When you log in for the first time, the Tru64 UNIX System Setup dialog box appears. Click on the Custom Setup icon. The Tru64 UNIX Custom Setup menu appears. Customize the system configuration, as described in Section 5.1.5.

Note:

If you choose Quick Setup, your configuration options are reduced — you will have to rerun the `sysman` command to complete the configuration.

5.1.5 Customize the System Configuration

The Tru64 UNIX Custom Setup menu offers a number of options, as illustrated in Figure 5–1.

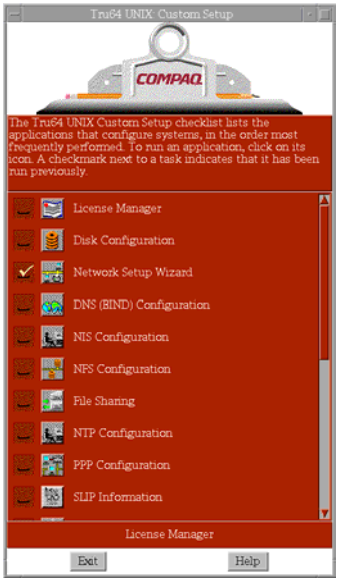

Figure 5–1 Tru64 UNIX Custom Setup Menu

Not all of these options are mandatory. This guide documents only the systems that you must configure. For more information about the Custom Setup Menu options, see the *HP Tru64 UNIX Installation Guide*.

First register the licenses, as described in Section 5.1.5.1.

5.1.5.1 Register Licenses (PAKs)

A license is a contract with terms and conditions. Each license has an associated Product Authorization Key (PAK), which is a set of characters.

When building the management server, you may choose to install the TCS-UA PAK specifically for the management server node type. This is not necessary and you should actually install the bundled PAKs, for all nodes in the system, onto the management server. Later on in the installation process, the licences database from the management server will automatically be reused when installing the domains and adding members.

You must use the license manager to enter the license information on each PAK into the license database; this process is called registering a license. Each time a user attempts to run a licensed product, the product calls the license-checking functions to be sure that the license allows the user to use the product.

For more information about licenses, see the *Tru64 UNIX Software License Management* manual.

Note:

The licenses listed below are those required to use software that is discussed elsewhere in this document. However:

- Not all of these licenses are required.
- There are other licenses that may be useful. These licenses would be installed in a similar way to the licenses below, but are not covered in this document.

Click on the License Manager icon (on the Custom Setup menu) to register the following licenses:

- HP AlphaServer SC System Software License (TCS-UA). This license is required before you can create a cluster.
- HP AlphaServer SC System Software License (ASC). This license is required; you need this license to run the console logger daemon (`cmfd`), and to use the `sra setup` command. See below for more information.
- Remote Installation Services License (OSF-SVR). This license is required; it is essential for system operation.
- Operating System Base License (OSF-BASE). This license supports up to two interactive users.
- Symmetric Multiprocessing (SMP) Extension to Base License (OSF-BASE). This license is optional; it is only needed for each additional CPU on the system.
- Concurrent Use License (OSF-USR) or Unlimited Interactive User License (OSF-USR). These licenses are optional; they are only needed if you wish to support interactive users.
- Advanced File System Utilities License (ADVFS-UTILITIES). This license is required; it is needed if you wish to configure additional storage in an AdvFS file domain.
- HP AlphaServer SC Development Software License (OSF-DEV). This license is optional; it is only needed if you wish to use the Ladebug debugger (see below) or other products such as the C, C++, and Fortran compilers, as well as other performance and debugging tools.

HP AlphaServer SC System Software

The HP AlphaServer SC System Software License is sold in bundles of 1-, 16-, 32-, 64-, and 128-node licenses. You can combine any of these bundles so that the total number of licenses is equal to, or more than, the number of nodes in the HP AlphaServer SC system. For example, you can combine one 16-node license with one 32-node license for a 48-node HP AlphaServer SC system. The management server (if present) is not counted as a node — although the licences must be installed on the management server.

The *HP AlphaServer SC40 QuickSpecs* provide ordering information for the 1-, 16-, 32-, 64-, and 128-node licenses.

The license file for the HP AlphaServer SC System Software License contains two **Product Authorization Keys** (**PAK**s): ASC and TCS-UA. Both of these PAKs must be installed on the system. A PAK contains a **units** field that identifies the capability of the PAK — the ASC PAK shown in Example 5–1 contains 6400 units.

Example 5–1 Sample ASC PAK

```
Issuer: DEC
Authorization Number: QS-SYS-16-NODE
Product Name: ASC
Producer: DEC
Number of units: 6400
Key Termination Date: 19-MAY-2001
Activity Table Code: CONSTANT=100
Checksum: 1-ABCD-GHDN-BOCJ-CLFH
```

Depending on the PAK, the units are used differently, as follows:

- ASC

  In LMF terms, the ASC PAK is a **concurrent-use** PAK. The number of units determines the number of nodes that are licensed — 400 units are required to license a node. When you register and load the ASC PAKs, the LMF system combines the units of all of the ASC PAKs together. You will see messages to this effect when you install the second and subsequent ASC PAKs.

- TCS-UA

  In LMF terms, the TCS-UA PAK is a **capacity-based** PAK. The number of units corresponds to the model of the AlphaServer — for example, a HP AlphaServer ES40 requires 1050 units. Unlike the ASC PAK, LMF does not combine the units of several TCS-UA PAKs. When you attempt to install a second or subsequent TCS-UA PAK, LMF will print messages saying that the PAKs were not combined. This does not matter as you only require one TCS-UA PAK for the system to operate correctly. It does not matter if several TCS-UA PAKs are registered.

The ASC and TCS-UA PAKs are delivered as a shell script containing the LMF commands to register and install the PAKs. If you purchased several HP AlphaServer SC System Software Licenses (for example, a 16-node license and a 32-node license) at the same time, you will receive a single shell script containing the appropriate PAKs. To install the PAKs, simply copy the script to the system and execute the script. If you later buy additional licenses, you will receive a second shell script containing the appropriate additional PAKs — the new script does not contain PAKs for the original licenses. To ensure that all PAKs are installed, you should execute each shell script. You should also keep a copy of each license shell script, in case you ever need to do a complete system reinstall.

As mentioned earlier, when you run the second and subsequent shell scripts, you will see messages saying that the ASC PAKs were combined but that the TCS-UA PAKs were not. This is normal.

If you do not install the ASC and TCS-UA PAKs, or if the number of ASC units is not appropriate for the number of nodes in the system, the system will not operate correctly as follows:

- The `sra setup` command will print a warning when you first specify the number of nodes. You can ignore this warning and attempt to continue. However, you may be unable to operate parts of the system at a later stage.
- The console management daemon (`cmfd`) will not start. You will be unable to access node consoles. A message will be printed to the `/var/sra/adm/log/cmfd/cmfd_<hostname>_<port>.log` file.

The shell script automatically registers and loads the ASC and TCS-UA PAKs. If you inadvertently unload the PAKs, the system will not operate — that is, a PAK must be both registered and loaded for it to work. You can tell how many units are loaded as follows:

```
atlasms# lmf list full cache for ASC
```

You can load previously registered ASC and TCS-UA PAKs as follows:

```
atlasms# lmf load 0 ASC
atlasms# lmf load 0 TCS-UA
```

The Ladebug Debugger

The Ladebug debugger, distributed with Tru64 UNIX Version 5.1, is a symbolic source-level debugger that supports debugging of ADA, C/C++, Fortran, and Fortran 90 applications. RMS uses the Ladebug debugger to print a back trace when an application core dumps.

To use the Ladebug debugger, you need the OSF-DEV license. You can obtain this license by purchasing, for example, HP AlphaServer SC Development Software, or Developer's Toolkit for Tru64 UNIX.

Note:

If you are not licensed to use the Ladebug debugger, RMS will not print a back trace.

When you have completed the license PAK registration, click on the Exit button to return to the Custom Setup Menu.

You are now ready to configure the networks, as described in Section 5.1.5.2.

5.1.5.2 Set Up Networks

Click on the Network Setup Wizard icon (on the Custom Setup menu) to configure the management and external networks. This displays a submenu as shown in Figure 5–2.

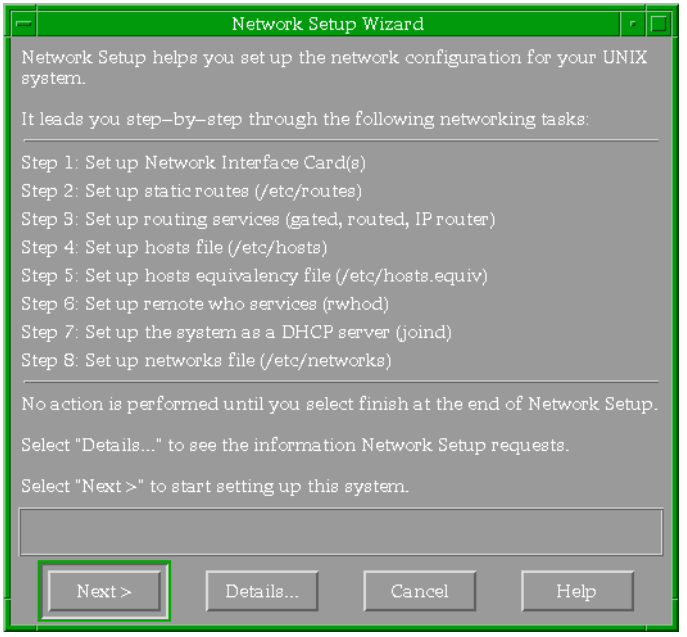

Figure 5–2 Tru64 UNIX Network Setup Wizard Menu

Configure the networks as follows:

1. Click on the Next button to display the Set up Network Interface Card(s) screen.

Set up the network interface cards using the settings provided in Table 5–5, where `atlas` is an example system name, and `x.x.x.x` and `y.y.y.y` are site-dependent values (recorded in Appendix D).

Table 5–5 Network Interface Cards on a Management Server

Network Type	Device Name	Host Name	IP Address	Network Mask
Management	`ee0`	`atlasms`	`10.128.101.1`	`255.255.0.0`
External	`ee1`	`atlasms-ext1`	`x.x.x.x`	`y.y.y.y`

2. Click on the Next button to display the Set Up Static Routes screen.

   Set up a default static route, as follows:

   a. Click on the Add button to display the Network Setup: Set Up Static Routes: Add/ Modify screen.
   b. Set the Destination Type to Default Gateway.
   c. In the Gateway field, enter the external gateway IP address (see Appendix C).
   d. Set the Route Via option to Gateway, and click on the OK button.

3. Click on the Next button to display the Set Up Routing Services screen.

   When configuring a management server, setting up routing services is an optional task.

   Note:

   For a clustered management server, it is mandatory to set up routing services using `gated`.

   - If you do not wish to set up a routing service for the system, select `None` when asked `Do you want to set up a routing service for this system.`
   - If you wish to set up routing services for the management server, set the routing services using the settings provided in Table 5–6:

   Table 5–6 Routing Services

Question	Answer
`Do you want to set up a routing service for this system:`	`Yes (use gated)`
`Do you want to run this system as an IP Router:`	`Yes`

4. Click on the Next button to display the Set Up Hosts File screen.

The hosts file will automatically contain the entries listed in Table 5–7. The following notes apply to Table 5–7:

- `atlas` is an example system name.
- `x.x.x.x` represents a site-specific value (recorded in Appendix D).
- DNS servers and NIS servers will be added later (see Section 5.1.5.3 on page 5–17 and Section 5.1.5.6 on page 5–19 respectively).

Note:

The `sra setup` command will update the `/etc/hosts` file to add an entry for all of the hosts associated with the domain (for example, `atlas0`, `atlas1`, ..., `atlas127`) as well as each cluster alias (see Section 5.2, step 9 on page 5–39).

Table 5–7 Hosts File When Configuring a Management Server

IP Address	Host Name	Aliases/Comments
`127.0.0.1`	`localhost`	
`10.128.101.1`	`atlasms`[1]	
`x.x.x.x`	`atlasms-ext1`[2]	

[1]This value is not displayed, but if you try to add it, you will be told that it is already in the hosts file.

[2]The `/etc/hosts` file may not contain the entries as shown in Table 5–7. If you are using the Network Setup Wizard, these entries will exist after you have completed all the Network Setup Wizard steps and select finish.

5. Click on the Next button to display the Set Up Hosts Equivalency File screen. Do not set up a hosts equivalency file.
6. Click on the Next button to display the Set Up Remote Who Services screen. Select No.
7. Click on the Next button to display the Set Up the System as a DHCP Server screen. Select No. Accept the default setting of Log No Messages.
8. Click on the Next button to display the Set Up Networks File screen. Click on the Next button to skip this step.
9. Click on the Finish button to return to the Custom Setup menu. When prompted to restart services, select Yes.

You are now ready to configure Domain Name Service / Berkeley Internet Name Daemon (DNS/BIND), as described in Section 5.1.5.3.

5.1.5.3 Configure DNS (BIND)

Note:

HP recommends configuring the HP AlphaServer SC Version 2.6 system as a DNS Client as indicated below. If you wish to configure the system as a DNS Server, please refer to Appendix I.

Note:

If you have more than one DNS server, you need to add your site specific DNS servers.

If you wish to configure DNS, perform the following steps:

1. Click on the DNS (BIND) Configuration icon (on the Custom Setup menu) to display the DNS (BIND) Configuration screen.
2. Double click on the Configure System as a DNS Client entry.
3. When prompted to add the DNS server to the hosts file, enter the local domain and click Add.
4. When prompted to update the host name, select No (see Note below).

   Note:

   If you select Yes, the host name is changed. If the host name is changed, RMS will not work (because the `rmshost` attribute in the RMS database is wrong). If you change the host names (by selecting Yes), log onto each node in turn and change the host name back to the original value, by removing the domain name.

5. Click on the Exit button to return to the Custom Setup menu.

For more information about configuring DNS (BIND), see Chapter 22 of the *HP AlphaServer SC System Administration Guide*.

You are now ready to configure the Network Time Protocol (NTP), as described in Section 5.1.5.4.

5.1.5.4 Configure NTP

Click on the NTP Configuration icon (on the Custom Setup menu) to configure the Network Time Protocol (NTP). You must know the name of an NTP server that is accessible through the external network interface on the first node (Nodes 0, 32, 64, or 96). Perform the following steps as the `root` user:

1. Double click on the Configure System as an NTP Client entry.
2. Click on the Add button, and enter the hostname of the NTP server on the external network.

Note:

The hostname of the NTP server does not need to be fully qualified. After network configuration, you can check to see that external network connection is valid by trying to `ping` one of the NTP servers. Otherwise the NTP restart will hang when it tries to start the service.

Note:

You can add as many NTP servers as your site requires.

3. Set the Mode to Server. Accept the default settings for Version and Key Number.
4. Click on the OK button to return to the Configure System as an NTP Client screen.
5. Click on the OK button to return to the Custom Setup Menu. When prompted to start `xntpd`, click on the Yes button.

For more information about configuring NTP, see Chapter 22 of the *HP AlphaServer SC System Administration Guide*.

You are now ready to configure the Network File System (NFS), as described in Section 5.1.5.5.

5.1.5.5 Configure NFS

Click on the NFS Configuration icon (on the Custom Setup menu) to display the NFS Configuration screen, and perform the following steps:

1. Double click on the Configure System as an NFS Client entry and accept the default settings.
2. Double click on the Configure System as an NFS Server entry and change the settings as follows:

Default Settings

```
Number of TCP Server Threads*: 8
Number of UDP Server Threads*: 8
```

New Settings:

```
Number of TCP Server Threads*: 32
Number of UDP Server Threads*: 96
```

where 128, as a sum of TCP and UDP, is the maximum allowed.

This will improve the RIS performance when completing the `sra install` step on all nodes as described in Chapter 7.

Ensure that the Enable Locking check box is selected (this is the default setting) and select OK to commit changes.

3. When prompted to restart the NFS daemons, select Yes.
4. Click on the Exit button to return to the Custom Setup menu.

For more information about configuring NFS, see Chapter 22 of the *HP AlphaServer SC System Administration Guide*.

You are now ready to configure the Network Information System (NIS), as described in Section 5.1.5.6.

5.1.5.6 Configure NIS

If you wish to configure the Network Information System (NIS), perform the following steps:

Note:

The installation of the HP AlphaServer SC RMS subset automatically adds a UNIX user named "rms" and a UNIX group named "rms" with specific identifiers.

However, the RMS subset installation will fail if any of the following already exist in the NIS database on the NIS master server:

— any group or user named "rms"

— any user with uid=15

— any group with gid=200

Such entries in the NIS database must be removed before proceeding. If you cannot remove such entries from the NIS database, then do not configure NIS at this time. NIS may be configured after the entire system is configured, however, this can be a security issue as NIS users with uid=15 or gid=200 will have access to RMS files on the HP AlphaServer SC system.

---

1. Click on the NIS Configuration icon (on the Custom Setup menu) to display the NIS Configuration screen.
2. Enter and confirm your system's NIS domain name.
3. If you already have a NIS master server, press Return to accept the default option to indicate that you are configuring a NIS client.

   If you do not have an external NIS master server, but you wish to use NIS within the HP AlphaServer SC system, configure the management server as a master server.
4. When configuring a NIS client, complete the following sub-steps:
   a. When prompted to use `ypbind` secure mode (option -s), select Yes.
   b. When prompted to use `ypbind` domain locks (option -S), select Yes.
   c. When prompted, enter the NIS MASTER server in the list of authorized NIS servers.
   d. If prompted to add the NIS MASTER server to the hosts file, select Yes and then enter the relevant details.

   When configuring a NIS master server, complete the following sub-steps:
   a. When prompted regarding enhanced security, select No.
   b. When prompted regarding maintaining maps as "btree" files, select No.
   c. When prompted for the names of the SLAVE servers, complete the list as desired.
   d. When prompted to use `ypbind` secure mode (option -s), select Yes.
   e. When prompted to use `ypbind` domain locks (option -S), select Yes.
   f. When prompted, enter other NIS servers as appropriate in the list of authorized NIS servers.
   g. If prompted to add these NIS servers to the hosts file, select Yes and enter the relevant details.
5. When prompted, choose option 3 to disallow all `ypset` requests.
6. When prompted to configure the system to use all of the NIS databases, select Yes.
7. When prompted to start the NIS daemons now, select Yes.
8. Click on the Finish button to return to the Custom Setup menu.

For more information about configuring NIS, see Chapter 22 of the *HP AlphaServer SC System Administration Guide*.

You are now ready to configure mail, as described in Section 5.1.5.7.

5.1.5.7 Configure Mail

Click on the Mail Configuration icon (on the Custom Setup menu) to configure mail.

Note:

You must configure mail.

Perform the following steps as the `root` user:

1. Double click on the Configure Mail as a Client entry.

   If DNS has not been set up, a warning is displayed.
2. Enter the mail server, and click the Commit button.
3. Select the Yes option to restart sendmail
4. Select the Close option to return to the Custom Setup menu.

For more information about configuring mail, see Chapter 22 of the *HP AlphaServer SC System Administration Guide*.

You are now ready to configure printers, as described in Section 5.1.5.8.

5.1.5.8 Configure Printers

If you wish to configure printers, click on the Printer Configuration icon (on the Custom Setup menu) and configure printers as described in Chapter 6 of the *HP Tru64 UNIX Network Administration* manual.

Note:

HP AlphaServer SC Version 2.6 supports remote printing only — do not attach a printer directly to the HP AlphaServer SC system.

Click on the Finish button to return to the Custom Setup menu. Click on the Exit button to return to the operating system prompt.

For more information about the other configuration options, such as security, see the *HP Tru64 UNIX Installation Guide*.

You are now ready to install the latest operating system patch, as described in Section 5.1.6.

5.1.6 Install the Operating System Patch Software

Install the Tru64 UNIX patch software on the management server.

Note:

For HP AlphaServer SC Version 2.6, you should load Tru64 UNIX 5.1B PK3 only.

The operating system patch software kit (`T64V51BB24AS0003-20030929.tar`) is available from the following location:
`<http://www.itrc.hp.com/>`

or from your local HP support representative.

Note:

Before you install the patch software, you must disable argument limits by running the following command (in light of a known issue with PK3 due to the number of patches, this step is necessary):

```
atlasms# sysconfig -r proc exec_disable_arg_limit=1
```

Note:

During the lifetime of this product release, the PK3 url above may become invalidated. If this happens, you should contact HP AlphaServer SC support.

If you have a clustered management server, you are now ready to install and configure the clustered management server, as described in Section 5.1.7. If not, you are ready to configure the remote installation services (RIS) server, as described in Section 5.1.8.

5.1.7 Install and Configure the Clustered Management Server

Note:

This section is optional. Only perform the steps in this section if you are installing a clustered management server. If you are not installing a clustered management server, you can configure the RIS server, as described in Section 5.1.8.

Note:

To install and configure a clustered management server, use only the standard TruCluster Server software. This software, which is supplied on the *Tru64 UNIX Associated Products Volume 2 Version 5.1B CD-ROM*, operates over a Gigabit Ethernet Interconnect.
Never install the HP AlphaServer SC-specific TruCluster Server software (which is supplied on the HP AlphaServer SC System Software CD-ROM) on a management server. Occasionally, patches may be provided for HP AlphaServer SC cluster software - do not apply such patches to a management server, unless specifically asked to do so. Always strictly adhere to all instructions supplied with patch kits.

To install and configure a clustered management server, perform the following tasks:

- Register the TruCluster Server Software License (see Section 5.1.7.1 on page 5–23)
- Load the TruCluster Server Subsets (see Section 5.1.7.2 on page 5–24)
- Install the TruCluster Server Patch Software (see Section 5.1.7.3 on page 5–24)
- Configure the EVA Storage System Disks for the Management Cluster (see Section 5.1.7.4 on page 5–25)
- Run the clu_create Command (see Section 5.1.7.5 on page 5–26)
- Back Up Important Configuration Files on Member 1 (see Section 5.1.7.6 on page 5–27)
- Prevent Other Members Booting During Installation (see Section 5.1.7.7 on page 5–28)
- Run the clu_add_member Command (see Section 5.1.7.8 on page 5–28)
- Boot the New Member (see Section 5.1.7.9 on page 5–29)
- Back Up Important Configuration Files on New Members (see Section 5.1.7.10 on page 5–30)

5.1.7.1 Register the TruCluster Server Software License

The TruCluster Server kit includes a license Product Authorization Key (PAK). Use this PAK when registering a TruCluster Server license. If you do not have a PAK, contact your HP Customer Support representative.

For information on installing a license PAK, refer to the *Tru64 UNIX Software License Management* manual.

5.1.7.2 Load the TruCluster Server Subsets

Note:

For a clustered management server, use only the standard TruCluster Server software (which is supplied on the *Tru64 UNIX Associated Products Volume 2 Version 5.1B CD-ROM*) operating over a Gigabit Ethernet Interconnect. **Never install the AlphaServer SC-specific TruCluster Server software (which is supplied on the HP AlphaServer SC System Software CD-ROM) on a management server.**

To load the TruCluster Server kit, perform the following steps:

1. Insert the *TruCluster Server Software Version 5.1B CD-ROM* in the disk drive.
2. If it is not already mounted, mount the CD-ROM (see Section 5.1.9, step 2 on page 5–32).
3. Install the TruCluster Server software, as follows:
   ```
   atlasms# cd /cdrom/TruCluster/kit
   atlasms# setld -l .
   ```
   Select the option to install all mandatory and all optional subsets.

   After you select an option, the installation procedure verifies that there is sufficient file system space before copying the subsets onto your system.

   Note:

   Patch kits include fixes for both the base operating system and for cluster software. If you are installing a patch kit, patch the system after loading the TruCluster Server subsets but before running `clu_create` to create a single-member cluster.

5.1.7.3 Install the TruCluster Server Patch Software

In Section 5.1.6, the Tru64 UNIX patch software was installed on the management server. It is now necessary to install the matching TruCluster Server patch software on the management server.

Note:

For HP AlphaServer SC Version 2.6, you should load Tru64 UNIX 5.1B PK3 only.

The operating system patch software kit (`T64V51BB24AS0003-20030929.tar`) is available from the following location:
`<http://www.itrc.hp.com/>`

or from your local HP support representative.

Note:

Before you install the patch software, you must disable argument limits by running the following command (in light of a known issue with PK3 due to the number of patches, this step is necessary):

```
atlasms# sysconfig -r proc exec_disable_arg_limit=1
```

Note:

During the lifetime of this product release, the url above may become invalidated. If this happens, you should contact HP AlphaServer SC support.

When following the system patch instructions below, please select only the TruCluster Server patches. At the end of the patch process, you will be informed that the system needs to be rebooted. You should select "Do nothing at this time". You will also be asked if you wish to overwrite the existing pre-patched kernel. You should select "y" and allow the overwrite operation. The clu_create phase will handle further required operations.

5.1.7.4 Configure the EVA Storage System Disks for the Management Cluster

In the example below, the aim is to be able to understand which UNIX special device corresponds to each shared-storage target disk, The screen shot is taken from an HSV110 installation but closely resembles an HSG80 installation.

To locate the target disks for the CFS disk, the quorum disk, and the boot disks, enter the following command:

```
atlasms0# hwmgr -view devices
```

```
 HWID: Device Name                Mfg      Model            Location
 ------------------------------------------------------------------------------
    4: /dev/dmapi/dmapi
    5: /dev/scp_scsi
    6: /dev/kevm
   42: /dev/disk/floppy0c                   3.5in floppy     fdi0-unit-0
   54: /dev/disk/cdrom0c          DEC       RRD46   (C) DEC  bus-0-targ-5-lun-0
   55: /dev/disk/dsk0c            COMPAQ    HSV110 (C)COMPAQ IDENTIFIER=1
   56: /dev/disk/dsk1c            COMPAQ    HSV110 (C)COMPAQ IDENTIFIER=2
   57: /dev/disk/dsk2c            COMPAQ    HSV110 (C)COMPAQ IDENTIFIER=3
   58: /dev/disk/dsk3c            COMPAQ    HSV110 (C)COMPAQ IDENTIFIER=4
   59: /dev/disk/dsk4c            COMPAQ    HSV110 (C)COMPAQ IDENTIFIER=5
   60: /dev/cport/scp0                      HSV110 (C)COMPAQ bus-3-targ-0-lun-0
```

To correctly assign disks, check the disk identifiers against the OS_UNIT_ID/IDENTIFIER parameters used in the EVA/EMA configuration script (Management Cluster section). For the example in Create Virtual Disk Units for the Management Cluster (see Section 3.16.2.3 on page 3–49), assign disks as follows:

```
IDENTIFIER=1 CFS disk
IDENTIFIER=2 quorum disk
IDENTIFIER=3 Tru64 disk
IDENTIFIER=4  node 0 boot disk
IDENTIFIER=5  node 1 boot disk
```

5.1.7.5 Run the clu_create Command

To create the first member of the cluster from the Tru64 UNIX system, perform the following steps:

1. For shared Fibre Channel storage, please ensure that steps were already taken in Section 5.1.3 to make the various shared cluster disks bootable.
2. If there are NFS filesystems mounted by the management server, where the NFS server is currently down, please take action to unmount such filesystems now.
3. Run the following command:
   `atlasms# /usr/sbin/clu_create`

   The `/usr/sbin/clu_create` command prompts for the information needed to create a single-member cluster. You should respond using the guidelines shown below where it is particularly important to leave the cluster name unqualified.

Sample answers to `clu_create` command:

```
Cluster name:                                          atlasms
Cluster alias IP Address:                              16.209.133.169
Clusterwide root partition:                            dsk0b
Clusterwide usr  partition:                            dsk0g
Clusterwide var  partition:                            dsk0h
Clusterwide i18n partition:                            Not-Applicable
Quorum disk device:                                    dsk1
Number of votes assigned to the quorum disk:           1
First member's member ID:                              1
Number of votes assigned to this member:               1
First member's boot disk:                              dsk3
First member's virtual cluster interconnect device name: ics0
First member's virtual cluster interconnect IP name:     atlasms0-ics0
First member's virtual cluster interconnect IP address:  10.32.0.1
First member's physical cluster interconnect devices     alt0
First member's NetRAIN device name                       Not-Applicable
First member's physical cluster interconnect IP address  10.33.0.1
```

Once all the questions are answered, the `clu_create` process will perform the following tasks:

- Sets up the clusterwide `root` (/), `/usr` and `/var` file systems, and the first member's boot disk.

- Configures a quorum disk (optional).
- Builds a kernel with cluster components.
- If the kernel build succeeds, `clu_create` copies the new kernel to the first member's boot disk. If the kernel build fails, `clu_create` displays warning messages but continues creating this first member. (You can boot the cluster `genvmunix` from the boot disk and attempt to build a kernel on the single-member cluster.)
- Sets boot-related console variables: `bootdef_dev` and `boot_reset`
- Creates and sets console variable `boot_dev`

The `clu_create` command writes a log file of the installation to `/cluster/admin/clu_create.log`. This log file contains all installation prompts, responses, and messages and should be examined for errors if problems arise during the `clu_create` phase.

4. When `clu_create` completes the kernel build phase, it will prompt to reboot now. You should answer **`Yes`**. The management server will now reboot as a single node cluster.

5.1.7.6 Back Up Important Configuration Files on Member 1

Because cluster members rely on the information in the following files, we recommend that, after booting the first member of the cluster, you make on-disk copies of these files in case of inadvertent modification. For member-specific files, the following examples assume that the member ID of the first member is 1 (`memberid=1`):

- `/etc/sysconfigtab.cluster`
  ```
  # cp /etc/sysconfigtab.cluster /etc/sysconfigtab.cluster.sav
  ```
- `/etc/rc.config.common`
  ```
  # cp /etc/rc.config.common /etc/rc.config.common.sav
  ```
- `/etc/sysconfigtab`

  This file is a CDSL whose target is:

  ```
  ../cluster/members/{memb}/boot_partition/etc/sysconfigtab
  ```

  To make a backup copy, change directory to the first member's `boot_partition/etc` directory and make a copy of its `sysconfigtab` file.

  For example:

  ```
  # cd /cluster/members/member1/boot_partition/etc
  # cp sysconfigtab sysconfigtab.sav
  ```
- `/etc/rc.config`

  This file is a CDSL whose target is:

  ```
  ../cluster/members/{memb}/etc/rc.config
  ```

  To make a backup copy, change directory to the first member's `etc` directory and make a copy of its `rc.config` file. For example:

```
# cd /cluster/members/member1/etc
# cp rc.config rc.config.sav
```

In addition, we recommend that you perform a full backup of the single-member cluster.

5.1.7.7 Prevent Other Members Booting During Installation

Halt or turn off the system that will become the new member. If halting the system:

1. Set the `auto_action` console variable to halt
   `>>> set auto_action halt`
2. Set the `bootdef_dev` console variable to an empty string:
   `>>> set bootdef_dev ""`

The reason for these precautions is to make sure that the system cannot boot from the disk that `clu_add_member` will configure as the new member's boot disk.

5.1.7.8 Run the clu_add_member Command

New members can now be added to the cluster using the following command:
`atlasms# /usr/sbin/clu_add_member`

The `/usr/sbin/clu_add_member` command prompts for the information needed to add new members. You should respond using the guidelines shown below where it is particularly important to leave the member name unqualified.

Sample answers to `clu_add_member` command

```
Member's hostname:                                atlasms1
Member's ID:                                      2
Number of votes assigned to this member:          1
Member's boot disk:                               dsk4
Member's virtual cluster interconnect devices:    ics0
Member's virtual cluster interconnect IP name:    atlasms1-ics0
Member's virtual cluster interconnect IP address: 10.32.0.2
Member's physical cluster interconnect devices:   alt0
Member's NetRAIN device name:                     Not-Applicable
Member's physical cluster interconnect IP address: 10.33.0.2
Member's cluster license:                         Not Entered
```

The `clu_add_member` command configures the new member's boot disk, adds and modifies files in the clusterwide file systems, and gives you the option of loading the TruCluster Server license PAK.

Note:

You can boot a system that does not have a TruCluster Server license. The system joins the cluster and boots to multi-user mode, but only root can log in (with a maximum of two users). The cluster application availability (CAA) daemon, `caad` is not started. The system displays a license error message reminding you to load the license. This policy enforces license checks while making it possible to boot and

repair a system during an emergency.
Load only the TruCluster Server license at this time. Do not load the Tru64 UNIX license PAK. (You will load the Tru64 UNIX license PAK and any other license PAKs you need after you boot the new member for the first time.)

The `clu_add_member` command writes a log file of the installation to `/cluster/admin/clu_add_member.log`. If problems arise, please examine this log file for errors before continuing.

5.1.7.9 Boot the New Member

After running `clu_add_member` go to the console of the newly installed member and perform the following steps:

1. At the console of the new member, set the console variable `boot_osflags` to A so the system will boot to multi-user mode:
   ```
   >>> set boot_osflags A
   ```
2. At the console of the new member, boot `genvmunix` from the new member's boot disk:
   ```
   >>> boot -file genvmunix new_member_boot_disk
   ```
   Remember to specify the correct SRM device name for the boot disk at the console as opposed to the Tru64 UNIX special file name you supplied to clu_add_member. For shared Fibre Channel storage, refer to the steps taken in Section 5.1.4 where the various shared cluster disks were made bootable. For example, if the console device name for the new member's boot disk is dka300:
   ```
   >>> boot -file genvmunix dka300
   ```
3. During its first boot, the new member automatically performs the following tasks:
   a. Configures all loaded subsets.
   b. Attempts to build a customized kernel.
      – If the kernel build succeeds, copies the new kernel to the member's boot partition.
      – If the build does not succeed, when the system reaches multi-user mode, you can run `doconfig` to build a kernel.

   Copy (`cp`) the new kernel from `/sys/HOSTNAME/vmunix` to `/vmunix` (If you move (`mv`) the kernel to `/vmumix` you will overwrite the `/vmunix` CDSL.)
4. When prompted to configure network interfaces, please select `configure` and follow the dialog to configure both the management network interface (`ee0`) and also the external network interface (`ee1`). The interfaces should be configured as shown in Table 5–8, where `atlas` is an example system name, and `x.x.x.x` and `y.y.y.y` are site-dependent values.

Table 5–8 Configuration of New Member Network Interfaces

Network Type	Device Name	Host Name	IP Address	Network Mask
Management	ee0	atlasms1	10.128.101.2	255.255.0.0
External	ee1	atlasms1-ext1	x.x.x.x	y.y.y.y

The system will continue to set the `boot_reset` and `bootdef_dev` variables, and creates and sets the `boot_dev` console variable. The system will then boot to multi-user mode.

5. When the system finishes booting to multi-user mode, register the Tru64 UNIX license and any other required application licenses. If you did not register the TruCluster Server license while running `clu_add_member`, you must register it now.
6. Because this member is still running `genvmunix`, reboot the system so it is using its custom kernel.
   ```
   # shutdown -r now
   ```
   This reboot is a mandatory step when adding a member to the cluster.

During the first boot, the system runs the `clu_check_config` command to examine the configuration of several important cluster subsystems. Look at the `clu_check_config` log files in the `/cluster/admin` directory to verify that these subsystems are configured properly and operating correctly.

You can then run the command in verbose mode to display more information about why a subsystem failed the initial test. See the *Tru64 UNIX System Administration Guide* and the TruCluster Server *Cluster Administration Guide* for information on configuring subsystems.

5.1.7.10 Back Up Important Configuration Files on New Members

Because cluster members rely on the information in the following files, we recommend that, after booting each additional member of the cluster, you make on-disk copies of these files in case of inadvertent modification.

For member-specific files, the examples use member 2 (`memberid=2`). Substitute the correct member ID for your new member when making backup copies of files. For example:

- `/etc/sysconfigtab.cluster`
  ```
  # cp /etc/sysconfigtab.cluster /etc/sysconfigtab.cluster.sav
  ```
  Because quorum vote information is updated each time a member is added, make a backup copy of this file after adding each member.
- `/etc/sysconfigtab`

  This file is a CDSL whose target is:

  `../cluster/members/{memb}/boot_partition/etc/sysconfigtab`

  To make a backup copy, change directory to the new member's `boot_partition/etc` directory and make a copy of its `sysconfigtab` file.

  For example:

```
# cd /cluster/members/member2/boot_partition/etc
# cp sysconfigtab sysconfigtab.sav
```

- `/etc/rc.config`

  This file is a CDSL whose target is:

  `../cluster/members/{memb}/etc/rc.config`

  To make a backup copy, change directory to the new member's `etc` directory and make a copy of its `rc.config` file. For example:

```
# cd /cluster/members/member2/etc
# cp rc.config rc.config.sav
```

5.1.8 Configure the RIS Server

Installation of the Tru64 UNIX operating system on the remaining nodes of each domain will be performed using a Remote Installation Services (RIS) server. The RIS server allows each new member to boot a network `vmunix`.

The RIS server is also necessary for performing particular diagnostics during the installation phase. It is important to configure the RIS server at this stage and before you actually install the HP AlphaServer SC software as described in Section 5.1.9.

Configure the management server as a RIS Server, as follows:

1. Insert the *Tru64 UNIX Version 5.1B Operating System Volume 1 CD-ROM* in the disk drive.
2. If it is not already mounted, mount the CD-ROM (see Section 5.1.9, step 2 on page 5–32).
3. Run the `ris` command as the `root` user, as follows:
   ```
   atlasms# ris
   ```
4. Choose the `Install software products` option by entering `i` at the prompt:
   ```
   Enter your choice: i
   ```
5. The RIS Installation menu displays the installation options. Choose option `1`, the `Install software into a new area` option.
6. Enter the full pathname for the distribution media, as follows:
   ```
   Enter the device special file name or the path of the directory
   where the software is located
   (for example, /mnt/ALPHA/BASE): /cdrom/ALPHA/BASE
   ```
7. Choose the standard boot method.
8. Choose to extract the software from the *Tru64 UNIX Version 5.1B Operating System Volume 1 CD-ROM*.

   Note:

   If you choose to link to the CD-ROM instead of extracting the software, the installation process is considerably slower.

9. Choose to install all mandatory and all optional subsets.
10. Enter `y` to confirm that the subset list is correct. The subset extraction process begins.

You are now ready to install the HP AlphaServer SC installation utility (SRA) software, as described in Section 5.1.9.

5.1.9 Install the HP AlphaServer SC System Software

To install the system software on the management server, perform the following steps as the `root` user:

1. Insert the *HP AlphaServer SC System Software* CD-ROM in the disk drive.
2. Mount the CD-ROM as the `root` user, as follows:
   a. Create a mount point for the CD-ROM, by running the following command:
      ```
      atlasms# mkdir /cdrom
      ```
   b. Mount the CD-ROM[1] as follows:
      ```
      atlasms# mount -r /dev/disk/cdrom0c /cdrom
      ```
   For more information about mounting a CD-ROM, see Appendix B of the *HP Tru64 UNIX Installation Guide*.
3. Change to the directory in which the kits are stored, as follows:
   ```
   atlasms# cd /cdrom/kits/
   ```
4. Install the HP AlphaServer SC software. From the kits directory above, run the following command:
   ```
   atlasms# ./InstallSC -install -ms
   ```

Note:

On clustered management servers, there may be some warnings at the end of the `InstallSC` sequence regarding `srad` and `rmshost`. These warnings should be ignored.

You are now ready to install the HP Fortran Run-Time Libraries, as described in Section 5.1.10.

1. See the *HP Tru64 UNIX Installation Guide* for more information on how to identify the CD-ROM device name. The CD-ROM device name in this example is `/dev/disk/cdrom0c`.

5.1.10 Install the HP Fortran Run-Time Libraries

To install the HP Fortran Run-Time Libraries, perform the following steps:

1. Insert the *Tru64 UNIX Version 5.1B Operating System Volume 1 CD-ROM* in the disk drive.
2. If it is not already mounted, mount the CD-ROM (see Section 5.1.9, step 2 on page 5–32).
3. Install the HP Fortran Run-Time Library, as follows:
```
atlasms# cd /cdrom/DEC_Fortran_RTL/kit
atlasms# setld -l .
```

You are now ready to install layered products, as described in Section 5.1.11.

5.1.11 Install Layered Products (Optional)

This step is optional. If you wish to install layered products (for example, CXML Compaq Extended Math Library), do so at this point, if possible.

If the product has a license (PAK), install the license now.

You are now ready to install the SANworks Storage System Scripting Utility, as described in Section 5.1.12.

5.1.12 Install the SANworks Storage System Scripting Utility

The SANworks Storage System Scripting Utility (SSSU) is required so that the SC Monitor system can monitor HP SANworks Management Appliance and HSV110 RAID System devices. If your system does not have a SANworks Management Appliance or HSV110 RAID System, you can skip this step.

To install the SANworks Storage System Scripting Utility, follow these steps:

1. Order the HP SANworks Tru64 UNIX Kit for Enterprise Virtual Array.
2. This kit contains a CD-ROM. Mount the CD-ROM as the `root` user, as follows:
   a. Create a mount point for the CD-ROM, by running the following command:
   ```
   atlasms# mkdir /cdrom
   ```
   b. Mount the CD-ROM as follows:
   ```
   atlasms# mount -r /dev/disk/cdrom0c /cdrom
   ```
   For more information about mounting a CD-ROM, see Appendix B of the *HP Tru64 UNIX Installation Guide*.
3. Change to the directory in which the kits are stored, as follows:
```
atlasms# cd /cdrom
```
4. Install the software, as follows:
```
atlasms# setld -l .
*** Enter subset selections ***
The following subsets are mandatory and will be installed automatically
```

```
unless you choose to exit without installing any subsets:
* Enterprise v2 For Tru64 Unix

You may choose one of the following options:
1) ALL of the above
2) CANCEL selections and redisplay menus
3) EXIT without installing any subsets

Estimated free diskspace(MB) in root:646.3 usr:

Enter your choices or press RETURN to redisplay menus.
Choices (for example, 1 2 4-6): 1
You are installing the following mandatory subsets:
Enterprise v2 For Tru64 Unix
You are installing the following optional subsets:
Estimated free diskspace(MB) in root:646.3 usr:1716.8
Is this correct? (y/n):y
```

5. When the `setld` command has completed, create a link to `/usr/bin/sssu`, as follows:
   `atlasms#` **`ln -fs /usr/opt/ENTP002/sbin/sssu /usr/bin/sssu`**

   This step is important, because the monitoring scripts expect the `sssu` binary to be located in the `/usr/bin` directory.

You are now ready to define the RMS master node (`rmshost`), as described in Section 5.1.13.

5.1.13 Define the RMS Master Node (rmshost)

Define the management server to be the RMS master node; that is, the `rmshost` system.

Note:

The `rmshost` is the cluster alias of the management server, in cases where you have a clustered management server.

To do this, update the `/etc/hosts` file on the management server, to define `rmshost` as a host alias for the management server, as shown in the following example:

```
10.128.101.1     atlasms          rmshost
```

On a clustered management server, the following steps are necessary and mandatory. On a standalone management server, these CAA steps do not apply.

1. Register the `SC05msql` resource profile with CAA as follows:
   `#` **`/usr/sbin/caa_register SC05msql`**
2. Start the CAA applications, as follows:
   `#` **`/usr/sbin/caa_start SC05msql`**

For further information about configuring these CAA applications, refer to Section 8.6.

You are now ready to build the new kernel and reboot, as described in Section 5.1.14.

5.1.14 Build the New Kernel and Reboot

To build the kernel on a management server, perform the following steps:

Note:

If you do not have a clustered management server, proceed directly to step 1.

Note:

On clustered management servers, use the following command sequence instead of the instructions in steps 2 to 5 below:

```
atlasms# BuildKernels
atlasms# DeployKernels
atlasms# shutdown -ch now
```

Once the nodes are shutdown, boot them again from the consoles.

Note:

Do not use the `mv` command to copy the kernels. In particular, do not use the `mv` command to copy the kernels on a clustered management server. On a non-clustered management server, you can safely move the new `vmunix` file to `/vmunix`.

1. Save a copy of the existing `/vmunix` file. If possible, save the file in the root (`/`) directory, as follows:

   ```
   atlasms# cp /vmunix /vmunix.save
   ```

   If there are disk space constraints, you can save the kernel file in a file system other than root. For example:

   ```
   atlasms# cp /vmunix /usr/vmunix.save
   ```

2. Run the `/usr/sbin/doconfig` program specifying the name of the target configuration file with the `-c` option. For example, on a system named `atlasms`, enter the following command:

   ```
   atlasms# /usr/sbin/doconfig -c ATLASMS
   *** KERNEL CONFIGURATION AND BUILD PROCEDURE ***
   Saving /sys/conf/ATLASMS as /sys/conf/ATLASMS.bck
   ```

3. You are prompted to indicate whether or not you want to edit the configuration file:

   ```
   Do you want to edit the configuration file? (y/n) [n]:
   ```

Accept the default to indicate that you do not want to edit the configuration file; the `/usr/sbin/doconfig` program builds a new kernel.

4. When the kernel configuration and build are completed without errors, copy the new `vmunix` file to `/vmunix`. On a system named `atlasms`, enter the following command:
   `atlasms# cp /sys/ATLASMS/vmunix /vmunix`

Note:

On a management server, you can safely move the new `vmunix` file to `/vmunix`.

However, in a domain, you must always copy the new `vmunix` file to `/vmunix`. This is because, in an HP AlphaServer SC system, `/vmunix` is a context-dependent symbolic link (CDSL):
`/vmunix -> cluster/members/{memb}/boot_partition/vmunix`
You should treat a CDSL as you would any other symbolic link: remember that copying a file follows the link, but moving a file replaces the link. If you were to move (instead of copy) a kernel to `/vmunix`, you would replace the symbolic link with the actual file.

It is good practice to always copy the new `vmunix` file to `/vmunix`, even on a management server.

5. Reboot the system as follows:
   `atlasms# /usr/sbin/shutdown -r now`

You are now ready to run the `sra setup` command, as described in Section 5.2.

5.2 Set Up the SC Database

Note:

The SC database is an SQL-based database and holds the information that was previously stored in the SRA database (the flat file `/var/sra/sra-database.dat`) and the RMS database (also a SQL-based database).

Set up the SC database on the management server, by running the following commands as the `root` user:

1. If you have a second rail in each HP AlphaServer ES40 system, but the rail is either currently unconnected or powered off, then you must first remove the second (expansion) elan card from the nodes before performing the `sra install` step. When prompted during the `sra setup` dialog, please answer that the system will have one

rail. Later, once the domains are built and all members added, the second rail can be added as a post-installation step by following the instructions in Section 8.12. Please refer to Section 3.5 for details on PCI slot selection rules.

2. Plan the domain attributes (see step 5) and record them in Appendix D.
3. Ensure that all nodes are halted; that is, that they are powered up at the SRM console prompt.

Note:

For some system installations that utilise CAA for the RMS service, there is a possibility that rmsbuild will report a warning during `sra setup`. If this warning arises, it can be ignored and the user should answer "yes" to when prompted. The warning is being ignored as it will automatically be handled/fixed later by the CAA startup script for RMS.

4. Run the `sra setup` command to create and populate the SC database, as follows:
   ```
   atlasms# sra setup
   ```
   This information is needed by other sra commands.
5. The `sra setup` command prompts you for the following information:
   - System name[1]
   - Number of nodes
   - Number associated with first domain and node[2]
   - Management Server or not?
   - Management Server Name[3]

1. The HP AlphaServer SC installation process uses the system name (which cannot end with a digit) to derive both the cluster alias names and the host names of each member in the domain. For example, in a 64-node system with system name `atlas`, the cluster aliases will be `atlasD0` and `atlasD1`, while the node host names will be `atlas0`, `atlas1`, ..., `atlas63`.
   Note that if the number of nodes is less than or equal to 32, the cluster alias name will be the same as the system name — in the above example, the cluster alias name would be `atlas`. If you later increase the number of nodes to 33 or more, you must create a second domain (`atlasD1`), and rename the original cluster alias (from `atlas` to `atlasD0`).
2. Domain and node names in a system typically start at 0, for example `atlasD0`, `atlas0`. However, it is possible to start at a different number, for example `atlasD32`, `atlas1024`.
3. For a clustered management server, the management server name is the cluster alias for the clustered management server.

- Hardware type of the system
- Number of Cluster Interconnect Rails used in the system
- Number of domains
- Management Network IP address for Node 0
- Cluster Interconnect IP address for Node 0[1]
- System Interconnect IP address for Node 0[2]
- Terminal server model
- Number of ports on the terminal server
  (if you do not accept the default terminal server model)
- IP address of first terminal server
- First port on first terminal server
- Interconnect Switch IP address at Node Level and Top Level for each Rail
- IP address for the Preferred Server cluster alias base address

6. The `sra setup` command displays these settings and asks you to confirm that they are correct. If any settings are incorrect, enter **`No`** and repeat step 5. When all settings are correct, enter **`Yes`** .
7. The `sra setup` command prompts you whether you would like to use optional automatic cluster configuration.

Note:

If you have allocated external node IP addresses and cluster alias IP addresses according to the scheme mentioned in Section 2.2, and if all clusters in the system (except possibly the first and last) are to be composed of the same number of nodes, enter **`Yes`** when the `sra setup` command asks you whether to use automatic cluster configuration. If you do, `sra setup` will prompt you for the cluster sizes and two

---

1. The Cluster Interconnect network is an IP network provided by TruCluster Server. This network only spans a domain. This network is an artifact of the TruCluster Server software and is not intended for end-user use. This network is denoted by the `ics` suffix.
2. The System Interconnect network is layered on the HP AlphaServer SC Interconnect, and spans all nodes connected to the HP AlphaServer SC Interconnect. This network can be configured with externally routable IP addresses (instead of the default 10.* network). For example, this allows you to perform high-speed FTP by routing through high-performance interfaces on externally connected nodes. Note that such use will impact bandwidth availability to parallel jobs. This network is denoted by the `eip` suffix.

base IP addresses. `sra setup` will check the IP addresses, and then automatically enter configuration information for each cluster into the database, saving you from having to answer several questions for each cluster

---

8. The `sra setup` command prompts you for the following information for each domain:
   - Number of Nodes in the First Cluster
   - Number of Node in Subsequent Clusters
   - External network IP address for First Node
   - IP address for cluster alias

   The `sra setup` command automatically assigns the IP addresses and prompts you to add the nodes to the database.
9. The `sra setup` command asks if you would like to update the `/etc/hosts` file. Press Return to accept the default answer of **`Yes`**. The `sra setup` command adds an entry to the `/etc/hosts` file for each IP address specified in steps 5 and 8 above.
10. The `sra setup` command asks which host should run console monitor (the `cmf` utility). Press Return to accept the default value (the current node). The `sra setup` command starts `cmf`, and informs you of the location of the `cmf` log file.

    If you require `cmf` to operate as a CAA application, you should wait and do so as described in Section 8.7.
11. The `sra setup` command asks if you would like to configure the terminal server(s). Press Return to accept the default answer of **`Yes`**; the `sra setup` command configures the terminal server ports.
12. The `sra setup` command asks if you would like to configure an alternate boot device. Enter **`yes`**. On SC20 systems, enter **`no`** for alternate boot device as there is no alternate boot device on these systems.
13. The `sra setup` command asks if you would like to use an alternate boot device. Enter **`yes`**.
14. The `sra setup` command prompts you for the information needed to configure the boot device(s). You can accept the default values for all settings except the SRM device name. To enter a value for the SRM device name, perform the following steps:
    a. Enter the SRM device name for the primary boot disk at the `SRM device name for primary boot disk?` prompt. If you do not know the SRM device name, enter **`probe`**.
    b. If prompted, enter the host name of a generic node that is currently at the SRM prompt. This is only necessary if you entered `probe` in step 14a. above.

       If you enter the host name of a node that is not currently at the SRM prompt, the hardware probe will fail.

c. The `sra setup` command displays the settings for the primary boot disk, including the SRM device name. To accept these settings, enter **`y`**. To change any setting, enter **`n`**, enter the item number of the setting to be changed, and enter the new value.

You can set the alternate boot device in a similar way.

Table 5–9 shows the recommended boot disk partition configuration when the memory size is 4GB and each boot disk is a 36GB disk.

Table 5–9 Recommended Boot Disk Partition Configuration

Partition	Description	Recommended Size (% and GB)	
		Boot Disk Only	Boot Disk and Alternate Boot
`b`	swap	30% = 10.8GB	15% = 5.4GB on each disk
`d`	/local	35% = 12.6GB	43% = 15.2GB on each disk
`e`	/tmp	35% = 12.6GB	42% = 15.4GB on each disk

For a 36GB disk, the swap space is calculated as 2.5 times the physical memory size. However, for an 18GB disk, the swap space is calculated as 1.25 times the physical memory size, which you may consider to be too low. Think carefully before accepting the default partition values.

Note:

If you configure an alternate boot disk and have chosen to use the alternate boot disk, its swap space is added to the `sysconfigtab` file; that is, you spread the swap space across the two disks. Also, the `tmp` and `local` partitions on the alternate boot disk are mounted on `/tmp1` and `/local1` respectively. You should take this into account when deciding the partition percentages, as follows:

– If configuring only one boot disk, use the values specified in the third column of Table 5–9.
– If configuring a boot disk and an alternate boot disk, use the values specified in the fourth column of Table 5–9.

15. The `sra setup` command asks for the information needed to configure the primary boot disk.

    Press Return to accept all the default answers. The SRM device name is not required to complete the installation.

16. The `sra setup` command asks for the information needed to configure the `Cluster /usr` and `/var` disk.

    Press Return to accept the default answer for all settings. The SRM device name is not required to complete the installation.

The Disk Location Identifier is required but at this point you can accept the default value. After running `sra setup` the identifiers can be updated using `sra edit` (see Section 7.2).

17. The `sra setup` command asks for the information needed to configure the backup cluster disk.

    Press Return to accept the default answer for all settings. The SRM device name is not required to complete the installation. The Disk Location Identifier is required but at this point you can accept the default value. After running `sra setup` the identifiers can be updated using `sra edit`.

18. The `sra setup` command asks for the information needed to configure the Generic boot disk.

    Press Return to accept the default answer for all settings. The SRM device name is not required to complete the installation.

    The Disk Location Identifier is required but at this point you can accept the default value. After running `sra setup` the identifiers can be updated using `sra edit`.

19. The `sra setup` command prompts you for the SRM device name and the UNIX device name for the management and external LAN adapters. You can accept the default value, or enter a new value, or use **`probe`** as described in step 14.

    Note:

    For an external LAN adapter, if the external LAN device name is unknown, you can accept the default SRM device name (for example, `eia0`) but you must enter the appropriate UNIX device name. Page xxix lists the SRM and UNIX device names for the supported network adapters.

    For HP AlphaServer DS20L systems, the SRM and UNIX names of the LAN devices are as follows:

```
                      SRM     UNIX
management lan        eib0    ee1
external lan          eia0    ee0
```

20. The `sra setup` command asks if you would like to probe the nodes for the hardware ethernet (MAC) address.

    Note:

    The `probe` command will return the MAC address of the first network interface only. The `sra edit` command may be used to set the MAC address manually (see Section C.1).

    Enter **`yes`** — the `sra setup` command asks two additional questions:

a. The script asks which nodes you would like to probe.

   You can specify a single node (for example, `atlas3`), several nodes (for example, `atlas3,atlas5`), a range of nodes (for example, `atlas[1-8]`), or all nodes (`all`).

   Enter **`all`**.

b. The script also asks if you would like to initialize hardware.

   This runs the SRM `init` command on each node. During the probe, SRM console variables are set, as detailed in Table 5–10.

   Enter **`yes`**.

Table 5–10 SRM Console Variables

Variable		Value
`auto_action`		`halt`
`boot_reset`		`off`
`boot_osflags`		`A`
`os_type`		`UNIX`
`ocp_text`		*`nodename`*
`eia0_mode` or `eib0_mode`	(`eia0_mode` if the management network interface is the first network adapter on the node; otherwise, the device name could be `eib0_mode`)	`FastFD`
`console`		`serial`
`sys_com1_rmc`		`off`
[1]`sysvar`		`12`
[1]`ac_action`		`STANDBY`
[1]`wol_enable`		`YES`

[1]For use in HP AlphaServer DS20L systems only.

If any nodes fail the hardware probe, a list of failed nodes is written to the `/tmp/sra_hosts.failed` file. A node may fail the hardware probe because it is not at the SRM prompt, or because `cmf` is misconfigured — see Section 11.6 on page 11–11 for more details.

The `sra setup` command asks if you would like to reset the failed nodes. Enter **`Yes`**.

The `sra setup` command asks if you would like to retry the hardware probe. Enter **`Yes`**.

The `sra setup` command asks if you would like to initialize the hardware during the probe. Enter **`Yes`**.

Note:

For the DS20L product, on the first node of each domain, the `sra setup` command automatically runs `init` and `wwidmgr` to set the path to the HSG disks. The `sra setup` command will take a little longer to run in this case.

21. The `sra setup` command asks if you would like to add nodes to the RIS database. Press Return to accept the default answer of **`Yes`**.The `sra setup` command configures each node as a RIS client. During the Configure RIS section of `sra setup`, you are asked if you would like to add domains to RIS. Press Return to accept the default answer of **`Yes`**.
22. The `sra setup` command will now prompt to add two root crontab entries (one crontab for archiving the `cmf` logs and one crontab for backing up the RMS database). Press Return to accept the default answer of **`Yes`** to both questions. The `cmf` archives will be archived every two weeks and the RMS database backup will take place nightly.
23. The `sra setup` command incrementally saves all information to the database, and then exits.

Note:

After the SC database has been created, the `sra setup` command completes the installation of the SRACFENGINE subset by running the `cfconfig` script on the management server.

The `cfconfig` command automatically runs on each cluster node when the node is first booted. The `cfconfig` command examines the local host to populate the appropriate files with default values. The `cfengine` daemon (`cfd`) starts for the first time after the `cfconfig` command has run.

If DNS has not been configured on the system, the `cfconfig` command will print an error message when it cannot find `/etc/resolve.conf`. This is normal. `cfengine` cannot operate unless DNS has been configured. You can run `cfconfig` at a later stage once DNS is configured.

If you later wish to change any of the data in the SC database, use the `sra edit` command (see Chapter 16 of the *HP AlphaServer SC System Administration Guide*) — it is not necessary to rerun the `sra setup` command.

See Appendix E for an example `sra setup` log file.

Note:

Now that you have set up the SC database, you can use the `sra -c|cl|m|ml` command on the management server to connect to the console of any system in the cluster. See Chapter 16 of the *HP AlphaServer SC System Administration Guide* for more information about the `sra -c|cl|m|ml` command.

24. You will now need to start RMS on the management server. If you have a standalone management server, this step is not necessary, so you can proceed to Section 5.3.

    On a clustered management server, the following steps are necessary and mandatory. On a standalone management server, these CAA steps do not apply.

    a. Register the `SC20rms` resource profile with CAA as follows:
    ```
    # /usr/sbin/caa_register SC20rms
    ```
    b. Start the CAA application, as follows:
    ```
    # /usr/sbin/caa_start SC20rms
    ```

    For further information about configuring this CAA application, refer to Section 8.6.

    You are now ready to configure out all nodes in the system, as described in Section 5.3.

5.3 Configure Out All Nodes During Installation

While the installation is progressing, it is necessary to configure out all nodes. If the nodes are left configured in, then there will be many unwanted events reporting the fact that the nodes are not responding. Configuring out the nodes will reduce the load on the `mSQL` daemon by the RMS `mmanager` and `eventmgr`. You should configure out the nodes as follows:

```
atlasms# rcontrol configure out nodes "atlas[0-1023]"
```

In Configure the RMS Database (see Section 8.5 on page 8–10) you will have the opportunity to create the desired partition configuration and to configure in the nodes again.

You are now ready to check all nodes in the system, as described in Section 5.4.

5.4 Check All Nodes in the HP AlphaServer SC System

Check all of the nodes in the system by performing the following steps:

- Check the State of the Nodes (see Section 5.4.1 on page 5–45)
- Check the System Firmware (see Section 5.4.2 on page 5–45)

5.4.1 Check the State of the Nodes

The `sra diag` command examines the HP AlphaServer ES40 node using various SRM and RMC commands, and gathers as much data as possible about the state of the specified node(s).

Run the `sra diag` command on all nodes, as follows:

```
atlasms# sra diag -nodes 'atlas[0-1023]' -analyze no
```

Review the `/var/sra/diag/`*`nodename`*`.sra_diag_report` files to check for errors or warnings.

You are now ready to check the system firmware, as described in Section 5.4.2.

5.4.2 Check the System Firmware

Table 5–11 lists the minimum firmware versions supported by HP AlphaServer SC Version 2.6 for an HP AlphaServer ES40, an HP AlphaServer ES45, and an HP AlphaServer DS20L system.

Table 5–11 Minimum System Firmware Versions

Firmware	HP AlphaServer ES40	HP AlphaServer ES45	HP AlphaServer DS20L
SRM Console	6.2-1	6.2-8	6.3-1
ARC Console	5.71	Not Displayed	Not Displayed
OpenVMS PALcode	1.96-103	1.96-39	1.90.71
Tru64 UNIX PALcode	1.90-104	1.90-30	1.86.68
Serial ROM	2.12-F	2.20-F	Not Displayed
RMC ROM	1.0	1.0	Not Displayed
RMC Flash ROM	2.5	1.9	Not Displayed

Check that all nodes in your system meet these minimum system firmware requirements, by performing the following tasks:

1. Run the `show config` command on all nodes and save the output to file, as follows:
   ```
   atlasms# sra command -nodes all -command 'show config' |tee /tmp/fw.txt
   ```
   (press Return when prompted for the root password)
2. View the SRM console firmware version:
   ```
   atlasms# grep -i 'SRM Console' /tmp/fw.txt
   ```

3. View the ARC console firmware version:
   ```
   atlasms# grep -i 'ARC Console' /tmp/fw.txt
   ```
4. View the UNIX PALcode firmware version:
   ```
   atlasms# grep -i 'PALcode' /tmp/fw.txt
   ```
5. View the Serial ROM firmware version:
   ```
   atlasms# grep -i 'Serial Rom' /tmp/fw.txt
   ```
6. View the RMC ROM firmware version:
   ```
   atlasms# grep -i 'RMC Rom' /tmp/fw.txt
   ```
7. View the RMC Flash ROM firmware version:
   ```
   atlasms# grep -i 'RMC Flash Rom' /tmp/fw.txt
   ```
8. Delete the output file:
   ```
   atlasms# rm /tmp/fw.txt
   ```

If necessary, update the system firmware, as described in Chapter 21 of the *HP AlphaServer SC System Administration Guide*.

You are now ready to configure and diagnose the HP AlphaServer SC Interconnect, as described in Section 5.5.

5.5 Configure and Diagnose the HP AlphaServer SC Interconnect

It is **vital** that these sections be performed at exactly this point in the installation.

If you neglect to perform these steps, then the remainder of the installation will have problems and there will be no way to diagnose the root cause. Rather than duplicate the text from the *HP AlphaServer SC Interconnect Installation and Diagnostics Manual*, this section contains a number of references to the relevant sections of that guide. Please be careful not to miss any steps as you refer to the sections. All steps are mandatory for successful operation of the diagnostic tools.

5.5.1 Upgrading the HP AlphaServer SC Interconnect Control Processor Software

Note:

This section does not apply to HP AlphaServer SC 16-port switches or old-type HP AlphaServer SC 128-way switches. Such switches are known as directly-connected switches, and do not have any firmware. This section only applies to the new-type HP AlphaServer SC 128-way switches containing an HP AlphaServer SC Interconnect control processor.

In HP AlphaServer SC Version 2.6, the software (also known as firmware) running on the HP AlphaServer SC Interconnect Control Processors has changed, and must be upgraded. The new software image is packaged in the SWM subset, which is part of the HP AlphaServer SC Version 2.6 System Software.

You should follow the steps in Section 7.2, Upgrading the HP AlphaServer SC Interconnect Control Processor Software and all subsections, of the *HP AlphaServer SC Interconnect Installation and Diagnostics Manual*.

5.5.2 Creating an Interconnect Configuration Using SC Viewer

To receive accurate status and diagnostic information about the HP AlphaServer SC Interconnect, it is mandatory to create an Interconnect Configuration using SC Viewer. This will allow the switch managers to report anomalies in the network and it will allow the command line diagnostic tools to make pass/fail decisions based on the configured size of the network versus the detected size of the network. Once configured, SC Viewer will also allow the user to view the interconnect configuration and events which is very important in identifying problem locations.

You should follow Section 7.3, Creating an Interconnect Configuration Using SC Viewer and all subsections, of the *HP AlphaServer SC Interconnect Installation and Diagnostics Manual*.

5.5.3 Confirming the Operation of the HP AlphaServer SC Interconnect

At this stage, the database and nodes will be in suitable condition to perform an initial sweep of diagnostics.

The following diagnostics should be performed:

- Assign a common clock source per rail (see Section 7.4.1 of the *HP AlphaServer SC Interconnect Installation and Diagnostics Manual*)
- Verify the clock frequency on each switch module (see Section 7.4.2 of the *HP AlphaServer SC Interconnect Installation and Diagnostics Manual*)
- Use `elanenvtest` to verify the switch modules (see Section 7.4.3 of the *HP AlphaServer SC Interconnect Installation and Diagnostics Manual*)
- Show links in reset (see Section 7.4.4 of the *HP AlphaServer SC Interconnect Installation and Diagnostics Manual*)
- Run `elanpcitest` on all nodes (see Section 7.4.5 of the *HP AlphaServer SC Interconnect Installation and Diagnostics Manual*)
- Run `elanlinktest` on all nodes (see Section 7.4.6 of the *HP AlphaServer SC Interconnect Installation and Diagnostics Manual*)

- Run `riscabletest` on each node-level switch (see Section 7.4.7 of the *HP AlphaServer SC Interconnect Installation and Diagnostics Manual*)

The remaining diagnostics will be performed once the system nodes are installed (see Chapter 8).

You are now ready to set up the SC Monitor System, as described in Section 5.6.

5.6 Set Up the SC Monitor System

After completing the installation steps in Section 5.2, the SC Database is populated with default entries. As there are many existing configurations, it is possible that the database may not reflect entirely the system configuration. For example, it is possible that your system may have more terminal servers than are added by default, or more switches.

Some devices, like HSG and SAN Appliance, are not added automatically in the database as monitored devices at install time, so it is necessary to add these devices if you want to monitor the device status.

Setting Up the SC Monitor system involves the following tasks:

- Add a SAN Appliance as Monitored Devices (see Section 5.6.1 on page 5–48)
- Change Terminal Servers Monitoring Distribution (see Section 5.6.2 on page 5–48)
- Change Extreme Switches Monitoring Distribution (see Section 5.6.3 on page 5–49)
- Activate the Changes (see Section 5.6.4 on page 5–50)

5.6.1 Add a SAN Appliance as Monitored Devices

The `sra setup` command does not add any entry for SAN Appliance devices. To monitor this type of device, add the device manually as a monitored device by using the `scmonmgr add command`. The command syntax is as follows:

```
scmonmgr add -c appliance -o object -i ip-addr -s server [-r rack -u unit]
```

For example:

```
atlasms# scmonmgr add -c appliance -o sanapp0 -i 16.21.24.13 -s atlasms
```

This command adds the SAN Appliance with `IP 16.21.24.13` as a monitored device with name `sanapp0`. The node that will perform the monitoring functions will be `atlasms`.

5.6.2 Change Terminal Servers Monitoring Distribution

Immediately after installation (when `sra setup` has completed), the terminal servers specified are added as monitored devices. All terminal servers are initially monitored by the management server, if there is a management server, or by the first domain otherwise.

To see the initial distribution for terminal server monitoring functions, run the following command:

```
# scmonmgr distribution -c tserver
```

Example (server `atlasms` monitors all 8 terminal servers from the system):

```
atlasms# scmonmgr distribution -c tserver
Class: tserver
Server atlasms monitors: atlas-tc[1-8]
atlasms#
```

To add additional terminal servers to be monitored by the system, use the `scmonmgr add` command.

Example:

```
atlasms# scmonmgr add -c tserver -o atlas-tc9 -s atlasms
```

Note:

A terminal server cannot be added if there is no entry for it in the `/etc/hosts` file. The system needs to know the IP address of the terminal server.

To change the distribution of the monitoring for terminal servers, use the `scmonmgr move` command as follows:

```
atlasms# scmonmgr move -o atlas-tc2 -s atlas10
```

After this `atlas10` will perform the monitoring for `atlas-tc2`.

5.6.3 Change Extreme Switches Monitoring Distribution

The `sra setup` process creates default entries for Extreme switches in the SC database using the following rules:

- If the number of nodes in the system is less than or equal to 16, a single Extreme switch of type Summit24 will be added as a monitored device.
- If the number of nodes is between 16 and 128 (including 128), the `setup` process adds three Summit48 switches for monitoring.
- If the number of nodes is greater than 128, the number of switches added for monitoring is calculated using the following expression: *{number of nodes from system / 32}*. So for a 255 nodes system, we will have *255/32 = 7* Summit48 switches added by default as monitored devices.

This model was established based on the standard configuration of the systems, but in real life it is possible that a system may not respect these rules and a post-install customization will be necessary.

If necessary, you can add/remove Extreme switches from the monitoring system by using `scmonmgr` command.

For example:

1. To add an Extreme switch as a monitored device
   ```
   atlasms# scmonmgr add -c extreme -o extreme10 -i 10.128.103.10 -s atlasms
   ```
2. To remove an Extreme switch as a monitored device
   ```
   atlasms# scmonmgr remove -o extreme10
   ```

The monitoring of all Extreme switches is initially set to be performed by the management server if the system has one, or by the first domain otherwise. But this can be changed using the `scmonmgr move` command.

5.6.4 Activate the Changes

After you have finished all the tasks required to change/customize the monitoring and distribution of the monitoring for a system, it is necessary to activate these changes by sending a reload command to the monitoring daemons running on all nodes of the system.

Before doing this, you can analyse/display the distribution of the monitoring for the entire system by using the following command:

```
atlasms# scmonmgr distribution
```

If you are satisfied, send the `reload` command to the daemons on each management server and domain. The monitoring daemon has a reload mechanism that works on domain level. If you send a `reload` command to a daemon (node) from a domain this will trigger the reload for all daemons from that domain.

To start the reload process for all the daemons on all domains in the system, run the following command:

```
atlasms# scrun -d all '/sbin/init.d/scmon reload'
```

This will send the reload signal (`SIGHUP`) to one node from each domain, and will trigger the reload procedure on all members from that domain.

After this, it is necessary to run the reload command on the management server:

```
atlasms# /sbin/init.d/scmon reload
```

For more information on SC Monitor management, refer to Chapter 27 of the *HP AlphaServer SC System Administration Guide*.

You are now ready to assign cabinets in the SC Database, as described in Section 5.7.

5.7 Assign Cabinets in the SC Database

The *Physical* view in the SC Viewer needs to know about how your HP AlphaServer SC system is packaged, which cabinets hold nodes, terminal servers, and other pieces of hardware. The sysman *sc_cabinet* menu is used to load this information into the SC Database.

Note:

You can skip this step now and perform it later. However, until you complete this step, the `scviewer` program will be unable to display the physical relationships between hardware components.

Also, if you are already running `scviewer`, please close it down before proceeding, as the *Physical* view will not correctly reflect the cabinet changes you are making until `scviewer` is restarted.

5.7.1 Load the Physical Relationships

To load the physical relationships, you should follow these steps:

1. Create a description of cabinets in the SC Database.

   Each cabinet (or rack) has the following data associated with it:

   - Number. Each cabinet has a unique number (starting at 1).
   - Label. In this release, the label can be blank or the same as the number. In a later release, you can assign a meaningful label to each cabinet.
   - Area. This allows you to group cabinets into different rooms or different areas within a room. A small system would probably have one area—a large system might have several. The area concept is used by the `scviewer` when displaying cabinets, so it helps if an area is smaller than 20 rows of 30 cabinets (these numbers are guidelines, you can have larger numbers).
   - Position within area. The position of a cabinet within an area is specified by a row and column number. If you drew a plan of your cabinets (as `scviewer` does), row 1, column 1 is on the top left. Row numbers increase as you move downwards and column numbers increase as you move to the right.

2. You can use the sysman *sc_cabinet* menu to create the cabinets in an area as follows:
   - Start the sysman *sc_cabinet* menu (as root):
     `atlasms# sysman sc_cabinet`
   - Select the Create block of cabinets... option.
   - Specify the Area Name, First cabinet number, the label style and the number of rows and columns you want.

- Click on Next, and confirm your choices by clicking on OK. A block of cabinets in this area is now created in the SC Database.

3. You can repeat these steps several times for different areas or for different blocks of cabinets.

5.7.2 Populate Cabinets with Nodes

You can populate a block of cabinets with a range of nodes as follows:

1. Start the sysman *sc_cabinet* menu (as root):
   `atlasms# sysman sc_cabinet`
2. Select the Assign nodes... option.
3. Enter the range of nodes that are to be placed into the cabinets.

Note:

The first node number should be 0 if the first node name is `atlas0`.

4. Enter the range of cabinet numbers where these nodes are located.
   - Nodes can be placed top to bottom (the first node is on top, last on bottom) or vice versa.
   - Nodes can be placed into the cabinet range first to last (the first node is placed into the first cabinet, the last node is placed into the last cabinet) or vice versa.
5. Click OK to confirm you choices. The SC Database is updated to reflect this node placement.
6. You can repeat these steps several times for different ranges of nodes.

5.7.3 Populate Cabinets with Other Hardware

You can populate cabinets with other hardware (terminal servers, and so on) as follows:

Note:

If you wish to modify the properties of one or more existing cabinets (for example, to contain additional hardware) select the cabinet, and click the Modify option, to edit the contents as described in Step 5.

1. Start the sysman *sc_cabinet* menu (as `root`):
   `atlasms# sysman sc_cabinet`
2. Select the Cabinets... option.

This shows a menu where all existing nodes are listed.

3. Select Add.. to add a new cabinet.
4. Specify a unique number, label, area, row and column. Click OK to create the cabinet in the SC Database.
5. The Edit a cabinet dialog box now appears. This allows you to place hardware components into the cabinet. A list on the right shows the Unassigned Objects—that is the hardware components that have no record of their location in the SC Database. The list does not show nodes—instead it shows other types of hardware components (terminal server, Extreme Switch, an so on).
6. To place a hardware component in the cabinet, select the component and click on the Move button. This places the component into the cabinet—so it appears in the Cabinet Contents list on the left.
7. You can reorder components in the cabinet by selecting the component and clicking on the Up and Down buttons.
8. To confirm your changes, click OK. The SC Database is updated.

The Cabinets... option also allows you to modify or delete existing cabinets.

When you have finished modifying the cabinet data in the SC Database, you can review the data using the Make report... option. This menu allows you to specify a file where a textual description of the data is saved. The data is saved in a format that allows subsequent machine processing rather than being human readable.

You are now ready to build the domains, as described in Chapter 7 (*Building the Domains*).

6

Installing: When the System Does Not Have a Management Server

This chapter describes how to install a HP AlphaServer SC system that does not have a management server.

Note:

For HP AlphaServer DS20L systems, you will have a management server, so please refer to **Chapter 5 (*Installing: When the System Has a Management Server*)** for installation instructions.

Note:

If your system has a management server, do not use this chapter — refer to Chapter 5 (*Installing: When the System Has a Management Server*) instead.

If you wish to add a management server to an HP AlphaServer SC system later — that is, after domain creation — use the checklist provided in Appendix C to ensure that you complete all installation tasks in the correct order.

When installing software on an HP AlphaServer SC system that does not have a management server, install the software on Node 0 first.

The information in this chapter is structured as follows:

- Set Up Node 0 (see Section 6.1 on page 6–2)
- Set Up the SC Database (see Section 6.2 on page 6–24)
- Configure Out All Nodes During Installation (see Section 6.3 on page 6–31)
- Check All Nodes in the HP AlphaServer SC System, Except Node 0 (see Section 6.4 on page 6–31)

- Configure and Diagnose the HP AlphaServer SC Interconnect (see Section 6.5 on page 6–33)
- Set Up the SC Monitor System (see Section 6.6 on page 6–35)
- Assign Cabinets in the SC Database (see Section 6.7 on page 6–37)
- Review the SC Database Disk Settings (see Section 6.8 on page 6–40)
- Transform Node 0 into a Single Node Domain (see Section 6.9 on page 6–42)
- Run the HP AlphaServer SC Interconnect Tests on Node 0 (see Section 6.10 on page 6–43)

Chapter 7 describes how to build domains.

Note:

Use the checklist provided in Appendix B, to ensure that you complete all installation tasks in the correct order.

6.1 Set Up Node 0

Setting up Node 0 involves the following tasks:

- Set the Console Variables (see Section 6.1.1 on page 6–3)
- Check the System Firmware (see Section 6.1.2 on page 6–4)
- Install the Tru64 UNIX Operating System (see Section 6.1.3 on page 6–4)
- Customize the System Configuration (see Section 6.1.4 on page 6–8)
- Install the Latest Operating System Patch Software (see Section 6.1.5 on page 6–18)
- Configure the RIS Server (see Section 6.1.6 on page 6–19)
- Install the HP AlphaServer SC System Software (see Section 6.1.7 on page 6–20)
- Install the HP Fortran Run-Time Libraries (see Section 6.1.8 on page 6–21)
- Install Layered Products (Optional) (see Section 6.1.9 on page 6–21)
- Install the SANworks Storage System Scripting Utility (see Section 6.1.10 on page 6–21)
- Add sysconfigtab Parameters (see Section 6.1.11 on page 6–22)
- Define the RMS Master Node (rmshost) (see Section 6.1.12 on page 6–23)

6.1.1 Set the Console Variables

Before installing the Tru64 UNIX operating system on Node 0, you must configure the system console.

Display the SRM console prompt on Node 0 as follows:

- If your system has a factory-installed software (FIS) kernel, it will automatically start to boot the Tru64 UNIX operating system at power on. When prompted to continue this boot, enter `No` to return to the SRM console prompt.
- If your system does not have a FIS kernel, the system will display the SRM console prompt at power on.

To set the console variables, enter (at the SRM console prompt) the commands specified in Table 6–1.

Table 6–1 Setting the Console Variables

```
P00>>> set auto_action HALT
P00>>> set eia0_mode FastFD
P00>>> set eib0_mode[1] FastFD[2]
P00>>> set boot_osflags A
P00>>> set boot_reset off
P00>>> set os_type UNIX
P00>>> set console serial
P00>>> set sys_com1_rmc off
P00>>> set ocp_text nodename
P00>>> set bootdef_dev ''
P00>>> set pci_parity on
```

[1] You need only set the `eib0_mode` variable on nodes that have an external network interface. You should set the `eia0_mode` variable on all nodes, for the management network.

[2] When setting the `eib0_mode` variable, specify the appropriate network speed.

The remaining console variables for Node 0, and all console variables for the remaining nodes, are automatically set during the installation process (see Section 6.2, step 22 on page 6–30).

For more information about the SRM console, see Chapter 2 of the *HP AlphaServer ES40 Owner's Guide*.

You are now ready to check the system firmware, as described in Section 6.1.2.

6.1.2 Check the System Firmware

Table 6–2 lists the minimum firmware versions supported by HP AlphaServer SC Version 2.6 for an HP AlphaServer ES40 and an HP AlphaServer ES45 system.

Table 6–2 Minimum System Firmware Versions

Firmware	HP AlphaServer ES40	HP AlphaServer ES45
SRM Console	6.2-1	6.2-8
ARC Console	5.71	Not Displayed
OpenVMS PALcode	1.96-103	1.96-39
Tru64 UNIX PALcode	1.90-104	1.90-30
Serial ROM	2.12-F	2.20-F
RMC ROM	1.0	1.0
RMC Flash ROM	2.5	1.9

Check that Node 0 meets these minimum system firmware requirements, by entering the `show config` command at the SRM prompt.

If necessary, update the system firmware, as described in Chapter 21 of the *HP AlphaServer SC System Administration Guide*.

You will check the system firmware on the other nodes later (see Section 6.4.2 on page 6–32).

You are now ready to install the Tru64 UNIX operating system, as described in Section 6.1.3.

6.1.3 Install the Tru64 UNIX Operating System

Install the Tru64 UNIX operating system on Node 0, from the *Tru64 UNIX Version 5.1B Operating System Volume 1* CD-ROM, as described here and in the *HP Tru64 UNIX Installation Guide*.

1. Insert the *Tru64 UNIX Version 5.1B Operating System Volume 1* CD-ROM into the disk drive.
2. Initialize the hardware, as follows:
   ```
   P00>>> init
   ```
3. Identify the CD-ROM device name by running the following SRM console command:
   ```
   P00>>> show device
   ```

The *show device* command produces the following output:

```
dka0.0.0.1.1          DKA0          COMPAQ BD018122C9 B016
dka100.1.0.1.1        DKA100        COMPAQ BD018122C9 B016
dka200.2.0.1.1        DKA200        COMPAQ BD018122C9 B016
dqa0.0.0.15.0         DQA0          COMPAQ CDR-8435  0013
dva0.0.0.1000.0       DVA0
eia0.0.0.2004.1       EIA0          00-50-8B-CF-46-CC
eib0.0.0.2005.1       EIB0          00-50-8B-CF-46-CD
pga0.0.0.3.1          PGA0          WWN-1000-0000-C922-391A
pka0.7.0.1.1          PKA0          SCSI Bus ID 7
```

In this example, the CD-ROM device name is *dqa0*.

4. Enter the following command at the SRM console prompt, to display the installation user interface:

   ```
   P00>>> boot dqa0
   ```

   The system boot process can take several minutes. Several hardware-specific messages are displayed. The more complex the system (many peripheral devices, and so on), the longer the boot process takes.

Upon successful system boot, the installation user interface appears. The type of user interface presented during installation depends on the hardware configuration:

- Systems equipped with graphics consoles present a graphical user interface.
- Systems with consoles that do not have graphics capabilities present a text-based, menu-driven user interface.

The information you supply is the same regardless of the type of user interface, but the order in which it is requested may be different. The following steps describe the steps when using the graphical user interface:

Follow these guidelines:

1. When prompted to select a language in which to view the user interface, choose `United States English`.
2. The Installation Welcome dialog box appears. Click on the Next button.
3. The Host Information dialog box appears. You must set several values on this screen, as follows:
   a. Set the host name. The host name should be the same as the network interface for the management network. For example, if the system name is `atlas`, the host name should be `atlas0`.
   b. Set the area.
   c. Set the location.
   d. Set the date.
   e. Set the time.

Click on the Next button.

4. The Set root Password dialog box appears. Set the root password for the system. The same root password is used for all nodes. Click on the Next button.
5. The Software Selection dialog box appears. You must set the values on this screen as follows:
   a. Choose "All Software" when prompted for the software that you wish to install.

   Click on the Next button.
6. The Kernel Options dialog box appears, prompting you to choose the type of kernel components to build into the kernel. Select `Customize` (you will choose the individual kernel options in step 13). Click on the Next button.
7. The Select File System Layout dialog box appears. Select `Customize File System Layout` and click on the Next button.
8. The Custom File System Layout dialog box appears. You must set several values on this screen, as follows:
   a. Set the Use LSM option to `No`.

      You must not use LSM at this stage; instead, configure LSM after all nodes have been added to the domain — see Section 8.10 on page 8–18.
   b. Configure the recommended partition layout for the system disk.

      Table 6–3 shows the recommended partition layout for an 18GB system disk, and for a 36GB disk, on Node 0.

Table 6–3 Recommended Partition Layout for Node 0 System Disk

File System	Disk	Partition	Size for an 18GB Disk	Size for a 36GB Disk	Type
root	dsk2	a	384MB	384MB	AdvFS
/usr	dsk2	d	5.4GB	11.1GB	AdvFS
swap1	dsk2	f	5.4GB	11.1GB	swap
/var	dsk2	e	5.4GB	11.1GB	AdvFS

See Chapter 6 of the *HP Tru64 UNIX Installation Guide* for more information about customizing the file system layout.

9. When you have entered all of the required information, click on the Next button.
10. The Installation Summary dialog box appears. Review the information on this screen. To change any values, click on the Reset button. When the information is correct, click on the Finish button.

11. The Ready to Begin Installation dialog box appears. Click on the OK button. The system saves the configuration, creates the file systems, and loads the software.
12. The system then automatically reboots from the system disk.
13. Software configuration occurs automatically after your system reboots. The Kernel Option Selection dialog box appears. You must select at least the options listed in Table 6–4.

Table 6–4 Minimum Kernel Options

Selection	Kernel Option
2	NTP V3 Kernel Phase Lock Loop (NTP_TIME)
3	Kernel Breakpoint Debugger (KDEBUG)
4	Packetfilter driver (PACKETFILTER)
12	ISO 9660 Compact Disc File System (CDFS)

If you need to install a kernel component after installation is complete, use the `doconfig(8)` command. See the *HP Tru64 UNIX Installation Guide* for more information.

14. When prompted to edit the configuration file, select `No`.
15. The kernel build procedure automatically begins after software configuration.
16. After the kernel build, the system reboots automatically.
17. The final step is to log into the newly installed system as the `root` user. (You may see warnings about missing license PAKs for OSF-BASE — you can ignore these until Section 6.1.4.1 on page 6–8.)

    When you log in for the first time, the Tru64 UNIX System Setup dialog box appears. Click on the Custom Setup icon. The Tru64 UNIX Custom Setup menu appears. Customize the system configuration, as described in Section 6.1.4.

Note:

If you choose Quick Setup, your configuration options are reduced — you will have to rerun the `sysman` command to complete the configuration.

6.1.4 Customize the System Configuration

The Tru64 UNIX Custom Setup menu offers a number of options, as illustrated in Figure 6–1.

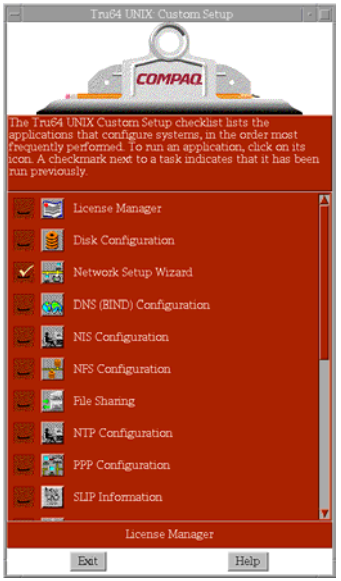

Figure 6–1 Tru64 UNIX Custom Setup Menu

Not all of these options are mandatory. This section describes only the systems that you must configure. For more information about the Custom Setup Menu options, see the *HP Tru64 UNIX Installation Guide*.

First register the licenses, as described in Section 6.1.4.1.

6.1.4.1 Register Licenses (PAKs)

A license is a contract with terms and conditions. Each license has an associated Product Authorization Key (PAK), which is a set of characters.

You must use the license manager to enter the license information on each PAK into the license database; this process is called registering a license. Each time a user attempts to run a licensed product, the product calls the license-checking functions to be sure that the license allows the user to use the product.

For more information about licenses, see the *Tru64 UNIX Software License Management* manual.

Note:

The licenses listed below are those required to use software that is discussed elsewhere in this document. However:

- Not all of these licenses are required.
- There are other licenses that may be useful. These licenses would be installed in a similar way to the licenses below, but are not covered in this document.

Click on the License Manager icon (on the Custom Setup menu) to register the following licenses:

- HP AlphaServer SC System Software License (TCS-UA and ASC). This license is required; you need this license to run the console logger daemon (`cmfd`), and to use the `sra setup` command. See below for more information.
- Remote Installation Services License (OSF-SVR). This license is required; it is essential for system operation.
- Operating System Base License (OSF-BASE). This license supports up to two interactive users.
- Symmetric Multiprocessing (SMP) Extension to Base License (OSF-BASE). This license is optional; it is only needed for each additional CPU on the system.
- Concurrent Use License (OSF-USER) or Unlimited Interactive User License (OSF-USER). These licenses are optional; they are only needed if you wish to support interactive users.
- Advanced File System Utilities License (ADVFS-UTILITIES). This license is required; it is needed if you wish to configure additional storage in an AdvFS file domain.
- HP AlphaServer SC Development Software License (OSF-DEV). This license is optional; it is only needed if you wish to use the Ladebug debugger (see below) or other products such as the C, C++, and Fortran compilers, as well as other performance and debugging tools.

HP AlphaServer SC System Software

The HP AlphaServer SC System Software License is sold in bundles of 1-, 16-, 32-, 64-, and 128-node licenses. You can combine any of these bundles so that the total number of licenses is equal to, or more than, the number of nodes in the HP AlphaServer SC system. For example, you can combine one 16-node license with one 32-node license for a 48-node HP AlphaServer SC system. The management server (if present) is not counted as a node — although the licences must be installed on the management server.

The *HP AlphaServer SC40 QuickSpecs* provide ordering information for the 1-, 16-, 32-, 64-, and 128-node licenses.

The license file for the HP AlphaServer SC System Software License contains two **Product Authorization Keys** (**PAK**s): ASC and TCS-UA. Both of these PAKs must be installed on the system. A PAK contains a **units** field that identifies the capability of the PAK — the ASC PAK shown in Example 6–1 contains 6400 units.

Example 6–1 Sample ASC PAK

```
Issuer: DEC
Authorization Number: QS-SYS-16-NODE
Product Name: ASC
Producer: DEC
Number of units: 6400
Key Termination Date: 19-MAY-2002
Activity Table Code: CONSTANT=100
Checksum: 1-ABCD-GHDN-BOCJ-CLFH
```

Depending on the PAK, the units are used differently, as follows:

- ASC

  In LMF terms, the ASC PAK is a **concurrent-use** PAK. The number of units determines the number of nodes that are licensed — 400 units are required to license a node. When you register and load the ASC PAKs, the LMF system combines the units of all of the ASC PAKs together. You will see messages to this effect when you install the second and subsequent ASC PAKs.

- TCS-UA

  In LMF terms, the TCS-UA PAK is a **capacity-based** PAK. The number of units corresponds to the model of the AlphaServer — for example, an HP AlphaServer ES40 requires 1050 units. Unlike the ASC PAK, LMF does not combine the units of several TCS-UA PAKs. When you attempt to install a second or subsequent TCS-UA PAK, LMF will print messages saying that the PAKs were not combined. This does not matter as you only require one TCS-UA PAK for the system to operate correctly. It does not matter if several TCS-UA PAKs are registered.

The ASC and TCS-UA PAKs are delivered as a shell script containing the LMF commands to register and install the PAKs. If you purchased several HP AlphaServer SC System Software Licenses (for example, a 16-node license and a 32-node license) at the same time, you will receive a single shell script containing the appropriate PAKs. To install the PAKs, simply copy the script to the system and execute the script. If you later buy additional licenses, you will receive a second shell script containing the appropriate additional PAKs — the new script does not contain PAKs for the original licenses. To ensure that all PAKs are installed, you should execute each shell script. You should also keep a copy of each license shell script, in case you ever need to do a complete system reinstall.

As mentioned earlier, when you run the second and subsequent shell scripts, you will see messages saying that the ASC PAKs were combined but that the TCS-UA PAKs were not. This is normal.

If you do not install the ASC and TCS-UA PAKs, or if the number of ASC units is not appropriate for the number of nodes in the system, the system will not operate correctly as follows:

- The `sra setup` command will print a warning when you first specify the number of nodes. You can ignore this warning and attempt to continue. However, you may be unable to operate parts of the system at a later stage.
- The console management daemon (`cmfd`) will not start. You will be unable to access node consoles. A message will be printed to the `/var/sra/adm/log/cmfd/cmfd_<hostname>_<port>.log` file.

The shell script automatically registers and loads the ASC and TCS-UA PAKs. If you inadvertently unload the PAKs, the system will not operate — that is, a PAK must be both registered and loaded for it to work. You can tell how many units are loaded as follows:

```
# lmf list full cache for ASC
```

You can load previously registered ASC and TCS-UA PAKs as follows:

```
# lmf load 0 ASC
# lmf load 0 TCS-UA
```

The Ladebug Debugger

The Ladebug debugger, distributed with Tru64 UNIX Version 5.1B, is a symbolic source-level debugger that supports debugging of ADA, C/C++, Fortran, and Fortran 90 applications. RMS uses the Ladebug debugger to print a back trace when an application core dumps.

To use the Ladebug debugger, you need the OSF-DEV license. You can obtain this license by purchasing, for example, HP AlphaServer SC Development Software, or Developer's Toolkit for Tru64 UNIX.

Note:

If you are not licensed to use the Ladebug debugger, RMS will not print a back trace.

When you have completed the license PAK registration, click on the Exit button to return to the Custom Setup Menu.

You are now ready to configure the networks, as described in Section 6.1.4.2.

6.1.4.2 Set Up Networks

Click on the Network Setup Wizard icon (on the Custom Setup menu) to configure the management and external networks. This displays a submenu as shown in Figure 6–2.

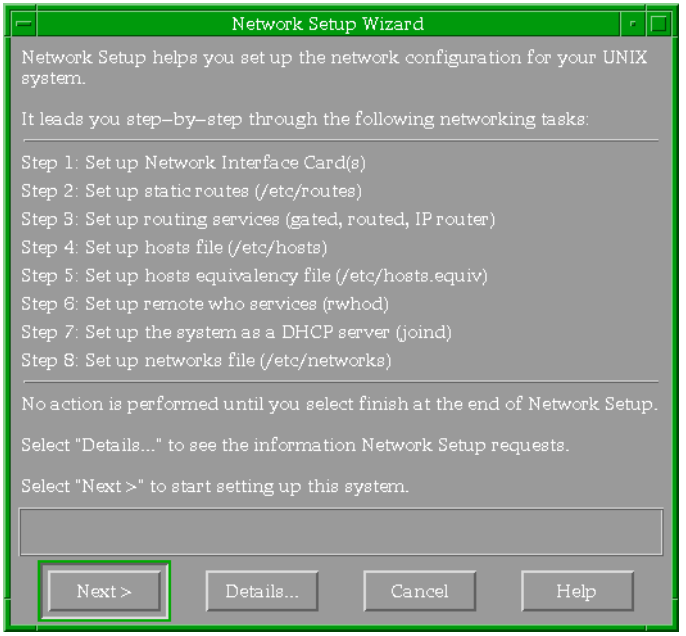

Figure 6–2 Tru64 UNIX Network Setup Wizard Menu

Configure the networks as follows:

1. Click on the Next button to display the Set up Network Interface Card(s) screen.

   Set up the network interface cards using the settings provided in Table 6–5, where `atlas` is an example system name, and `x.x.x.x` and `y.y.y.y` are site-dependent values (recorded in Appendix D).

Table 6–5 Network Interface Cards on Node 0

Network Type	Device Name	Host Name	IP Address	Network Mask
Management	`ee0`	`atlas0`	`10.128.0.1`	`255.255.0.0`
External	`ee1`	`atlas0-ext1`	`x.x.x.x`	`y.y.y.y`

2. Click on the Next button to display the Set Up Static Routes screen.

   Set up a default static route, as follows:

a. Click on the Add button to display the Network Setup: Set Up Static Routes: Add/Modify screen.
b. Set the Destination Type to Default Gateway.
c. In the Gateway field, enter the external gateway IP address (see Appendix C).
d. Set the Route Via option to Gateway, and click on the OK button.

Note:

The default route for each node added to a domain is automatically set to the IP address of the first node in the domain.

3. Click on the Next button to display the Set Up Routing Services screen.

   You must set the routing services using the settings provided in Table 6–6:

Table 6–6 Routing Services

Question	Answer
`Do you want to set up a routing service for this system:`	`Yes (use gated)`
`Do you want to run this system as an IP Router:`	`Yes`

4. Click on the Next button to display the Set Up Hosts File screen.

   The hosts file will automatically contain the entries listed in Table 6–7. The following notes apply to Table 6–7:

   - `atlas` is an example system name.
   - `x.x.x.x` represents a site-specific value (recorded in Appendix D).
   - DNS servers and NIS servers will be added later (see Section 6.1.4.3 on page 6–14 and Section 6.1.4.6 on page 6–16 respectively).

Note:

The `sra setup` command will update the `/etc/hosts` file to add an entry for all of the hosts associated with the cluster (for example, `atlas1`, `atlas2`, ..., `atlas127`) as well as each cluster alias (see Section 6.2, step 10 on page 6–26).

Table 6–7 Hosts File When Configuring Node 0

IP Address	Host Name	Aliases/Comments
`127.0.0.1`	`localhost`	

Table 6–7 Hosts File When Configuring Node 0

IP Address	Host Name	Aliases/Comments
10.128.0.1	atlas0[1]	
x.x.x.x	atlas0-ext1[2]	

[1]This value is not displayed, but if you try to add it, you will be told that it is already in the hosts file.

[2]The /etc/hosts file may not contain the entries as shown in Table 6–7. If you are using the Network Setup Wizard, these entries will exist after you have completed all the Network Setup Wizard steps and select finish.

5. Click on the Next button to display the Set Up Hosts Equivalency File screen. Do not set up a hosts equivalency file.
6. Click on the Next button to display the Set Up Remote Who Services screen. Select No.
7. Click on the Next button to display the Set Up the System as a DHCP Server screen. Select No. Accept the default setting of Log No Messages.
8. Click on the Next button to display the Set Up Networks File screen. Click on the Next button to skip this step.
9. Click on the Finish button to return to the Custom Setup menu. When prompted to restart services, select Yes.

You are now ready to configure Domain Name Service / Berkeley Internet Name Daemon (DNS/BIND), as described in Section 6.1.4.3.

6.1.4.3 Configure DNS (BIND)

Note:

HP AlphaServer SC Version 2.6 supports configuring the system as a DNS client only — do not configure the system as a DNS server.

If you wish to configure DNS, perform the following steps:

1. Click on the DNS (BIND) Configuration icon (on the Custom Setup menu) to display the DNS (BIND) Configuration screen.
2. Double click on the Configure System as a DNS Client entry.
3. When prompted to add the DNS server to the hosts file, enter the local domain and click Add.
4. When prompted to update the host name, select No (see Note below).

Note:

If you select Yes, the host name is changed. If the host name is changed, RMS will not work (because the `rmshost` attribute in the RMS database is wrong). If you change the host names (by selecting Yes), log onto each node in turn and change the host name back to the original value, by removing the domain name.

5. Click on the Exit button to return to the Custom Setup menu.

For more information about configuring DNS (BIND), see Chapter 22 of the *HP AlphaServer SC System Administration Guide*.

You are now ready to configure the Network Time Protocol (NTP), as described in Section 6.1.4.4.

6.1.4.4 Configure NTP

Click on the NTP Configuration icon (on the Custom Setup menu) to configure the Network Time Protocol (NTP). You must know the name of an NTP server that is accessible through the external network interface on the first node (Nodes 0, 32, 64, or 96). Perform the following steps as the `root` user:

1. Double click on the Configure System as an NTP Client entry.
2. Click on the Add button, and enter the hostname of the NTP server on the external network.

Note:

The hostname of the NTP server does not need to be fully qualified. After network configuration, you can check to see that external network connection is valid by trying to `ping` one of the NTP servers. Otherwise the NTP restart will hang when it tries to start the service.

3. Set the Mode to Server. Accept the default settings for Version and Key Number.
4. Click on the OK button to return to the Configure System as an NTP Client screen.
5. Click on the OK button to return to the Custom Setup Menu. When prompted to start `xntpd`, click on the Yes button.

For more information about configuring NTP, see Chapter 22 of the *HP AlphaServer SC System Administration Guide*.

You are now ready to configure the Network File System (NFS), as described in Section 6.1.4.5.

6.1.4.5 Configure NFS

Click on the NFS Configuration icon (on the Custom Setup menu) to display the NFS Configuration screen, and perform the following steps:.

1. Double click on the Configure System as an NFS Client entry and accept the default settings.
2. Double click on the Configure System as an NFS Server entry and accept the default settings.

   Ensure that the Enable Locking check box is selected (this is the default setting).
3. When prompted to restart the NFS daemons, select Yes.
4. Click on the Exit button to return to the Custom Setup menu.

For more information about configuring NFS, see Chapter 22 of the *HP AlphaServer SC System Administration Guide*.

You are now ready to configure the Network Information System (NIS), as described in Section 6.1.4.6.

6.1.4.6 Configure NIS

If you wish to configure the Network Information System (NIS), perform the following steps:

Note:

The installation of the HP AlphaServer SC RMS subset automatically adds a UNIX user named "rms" and a UNIX group named "rms" with specific identifiers.

However, the RMS subset installation will fail if any of the following already exist in the NIS database on the NIS master server:

— any group or user named "rms"

— any user with uid=15

— any group with gid=200

Such entries in the NIS database must be removed before proceeding. If you cannot remove such entries from the NIS database, then do not configure NIS at this time. NIS may be configured after the entire system is configured, however, this can be a security issue as NIS users with uid=15 or gid=200 will have access to RMS files on the HP AlphaServer SC system.

---

1. Click on the NIS Configuration icon (on the Custom Setup menu) to display the NIS Configuration screen.

2. Enter and confirm your system's NIS domain name.
3. Choose option 2 to indicate that you are configuring a slave server.

Note:

HP AlphaServer SC Version 2.6 supports configuring Node 0 as a NIS slave server only. Do not configure the system as a NIS master.

4. When prompted to copy the current maps from the master server, select Yes.
5. When prompted, please provide the NIS MASTER server for the domain.
6. If prompted to add the NIS server to the hosts file, select Yes and subsequently enter the relevant details.
7. When prompted regarding enhanced security, select No.
8. When prompted regarding maintaining maps as "btree" files, select No.
9. When prompted to use `ypbind` secure mode (option -s), select Yes.
10. When prompted to use `ypbind` domain locks (option -S), select Yes.
11. When prompted, enter the NIS MASTER in addition to the slave server itself in the list of authorised NIS servers.
12. When prompted, choose option 3 to disallow all `ypset` requests.
13. When prompted to configure the system to use all of the NIS databases, select Yes.
14. When prompted to start the NIS daemons now, select Yes.
15. Click on the Finish button to return to the Custom Setup menu.

For more information about configuring NIS, see Chapter 22 of the *HP AlphaServer SC System Administration Guide*.

You are now ready to configure mail, as described in Section 6.1.4.7.

6.1.4.7 Configure Mail

Click on the Mail Configuration icon (on the Custom Setup menu) to configure mail.

Note:

You must configure mail.

Perform the following steps as the `root` user:

1. Double click on the Configure Mail as a Client entry.

If DNS has not been set up, a warning is displayed.

2. Enter the mail server, and click the Commit button.
3. Select the Yes option to restart sendmail
4. Select the Close option to return to the Custom Setup menu.

For more information about configuring mail, see Chapter 22 of the *HP AlphaServer SC System Administration Guide*.

You are now ready to configure printers, as described in Section 6.1.4.8.

6.1.4.8 Configure Printers

If you wish to configure printers, click on the Printer Configuration icon (on the Custom Setup menu) and configure printers as described in Chapter 6 of the *Tru64 UNIX Network Administration* manual.

Note:

HP AlphaServer SC Version 2.6 supports remote printing only — do not attach a printer directly to the HP AlphaServer SC system.

Click on the Finish button to return to the Custom Setup menu. Click on the Exit button to return to the operating system prompt.

For more information about the other configuration options, such as security, see the *HP Tru64 UNIX Installation Guide*.

You are now ready to install the latest operating system patch, as described in Section 6.1.5.

6.1.5 Install the Latest Operating System Patch Software

Install the Tru64 UNIX patch software on the management server.

Note:

For HP AlphaServer SC Version 2.6, you should load Tru64 UNIX 5.1B PK3 only.

The operating system patch software kit (`T64V51BB24AS0003-20030929.tar`) is available from the following location:
`<http://www.itrc.hp.com/>`

or from your local HP support representative.

Note:

Before you install the patch software, you must disable argument limits by running the following command (in light of a known issue with PK3 due to the number of patches, this step is necessary):

```
atlasms# sysconfig -r proc exec_disable_arg_limit=1
```

Note:

During the lifetime of this product release, the url above may become invalidated. If this happens, you should contact HP AlphaServer SC support.

You are now ready to configure the remote installation services (RIS) server, as described in Section 6.1.6.

6.1.6 Configure the RIS Server

Installation of the Tru64 UNIX operating system on the remaining nodes of each domain will be performed using a Remote Installation Services (RIS) server. The RIS server allows each new member to boot a network `vmunix`.

The RIS server is also necessary for performing particular diagnostics during the installation phase. It is important to configure the RIS server at this stage and before you actually install the HP AlphaServer SC software in section Install the HP AlphaServer SC System Software (see Section 6.1.7 on page 6–20).

Configure Node 0 as a RIS Server, as follows:

1. Insert the *Tru64 UNIX Version 5.1B Operating System Volume 1* CD-ROM in the disk drive.
2. If it is not already mounted, mount the CD-ROM (see Section 6.1.7, step 2 on page 6–20).
3. Run the `ris` command as the `root` user, as follows:
   ```
   atlas0# ris
   ```
4. Choose the `Install software products` option by entering `i` at the prompt:
   ```
   Enter your choice: i
   ```
5. The RIS Installation menu displays the installation options. Choose option `1`, the `Install software into a new area` option.
6. Enter the full pathname for the distribution media, as follows:
   ```
   Enter the device special file name or the path of the directory
   where the software is located
   (for example, /mnt/ALPHA/BASE): /cdrom/ALPHA/BASE
   ```

7. Choose the standard boot method.
8. Choose to extract the software from the *Tru64 UNIX Version 5.1B Operating System Volume 1* CD-ROM.

Note:

If you choose to link to the CD-ROM instead of extracting the software, the installation process is considerably slower.

9. Choose to install all mandatory and all optional subsets (option 72).
10. Enter `y` to confirm that the subset list is correct. The subset extraction process begins.

Do not configure any RIS clients at this time — configure RIS clients later using the `sra setup` command (see Section 6.2, step 22 on page 6–30).

You are now ready to install the HP AlphaServer SC installation utility (SRA) software, as described in Section 6.1.7.

Note:

You can rebuild the kernel up to the point where the HP AlphaServer SC software is installed.

6.1.7 Install the HP AlphaServer SC System Software

To install the HP AlphaServer SC software on Node 0, perform the following steps as the `root` user:

1. Insert the *HP AlphaServer SC System Software* CD-ROM in the disk drive.
2. Mount the CD-ROM as the `root` user, as follows:
   a. Create a mount point for the CD-ROM, by running the following command:
      `atlas0# mkdir /cdrom`
   b. Mount the CD-ROM[1] as follows:
      `atlas0# mount -r /dev/disk/cdrom0c /cdrom`

   For more information about mounting a CD-ROM, see Appendix B of the *HP Tru64 UNIX Installation Guide*.
3. Change to the directory in which the kits are stored, as follows:
   `atlas0# cd /cdrom/kits`

1. See the *HP Tru64 UNIX Installation Guide* for more information on how to identify the CD-ROM device name. The CD-ROM device name in this example is `/dev/disk/cdrom0c`.

4. Install the HP AlphaServer SC software. From the kits directory above, if you do not have a management server, run the following command:
   ```
   atlas0# ./InstallSC -install -noms
   ```

You are now ready to install the HP Fortran Run-Time Libraries, as described in Section 6.1.8.

6.1.8 Install the HP Fortran Run-Time Libraries

To install the HP Fortran Run-Time Libraries, perform the following steps:

1. Insert the *Tru64 UNIX Version 5.1B Operating System Volume 1* CD-ROM in the disk drive.
2. If it is not already mounted, mount the CD-ROM (see Section 6.1.7, step 2 on page 6–20).
3. Install the HP Fortran Run-Time Library, as follows:
   ```
   atlas0# cd /cdrom/DEC_Fortran_RTL/kit
   atlas0# setld -l .
   ```

You are now ready to install layered products, as described in Section 6.1.9.

6.1.9 Install Layered Products (Optional)

This step is optional. If you wish to install layered products (for example, CXML Compaq Extended Math Library), do so at this point, if possible.

If the product has a license (PAK), install the license now. Licenses added to the first domain member are propagated to new members added to the domain.

You are now ready to install the SANworks Storage System Scripting Utility, as described in Section 6.1.10.

6.1.10 Install the SANworks Storage System Scripting Utility

The SANworks Storage System Scripting Utility (SSSU) is required so that the SC Monitor system can monitor HP SANworks Management Appliance and HSV110 RAID System devices. If your system does not have a SANworks Management Appliance or HSV110 RAID System, you can skip this step.

To install the SANworks Storage System Scripting Utility, follow these steps:

1. Order HP SANworks Tru64 UNIX Kit for Enterprise Virtual Array.
2. This kit contains a CD-ROM. Mount the CD-ROM as the `root` user, as follows:
   a. Create a mount point for the CD-ROM, by running the following command:
      ```
      atlas0# mkdir /cdrom
      ```
   b. Mount the CD-ROM as follows:
      ```
      atlas0# mount -r /dev/disk/cdrom0c /cdrom
      ```

For more information about mounting a CD-ROM, see Appendix B of the *HP Tru64 UNIX Installation Guide*.

3. Change to the directory in which the kits are stored, as follows:
```
atlas0# cd /cdrom
```
4. Install the software, as follows:
```
atlas0# setld -l .
*** Enter subset selections ***
The following subsets are mandatory and will be installed automatically
unless you choose to exit without installing any subsets:
* Enterprise v2 For Tru64 Unix

You may choose one of the following options:
1) ALL of the above
2) CANCEL selections and redisplay menus
3) EXIT without installing any subsets

Estimated free diskspace(MB) in root:646.3 usr:

Enter your choices or press RETURN to redisplay menus.
Choices (for example, 1 2 4-6): 1
You are installing the following mandatory subsets:
Enterprise v2 For Tru64 Unix
You are installing the following optional subsets:
Estimated free diskspace(MB) in root:646.3 usr:1716.8
Is this correct? (y/n):y
```
5. When the `setld` command has completed, create a link to `/usr/bin/sssu`, as follows:
```
atlas0# ln -fs /usr/opt/ENTP002/sbin/sssu /usr/bin/sssu
```
This step is important, because the monitoring scripts expect the `sssu` binary to be located in the `/usr/bin` directory.

You are now ready to add the `sysconfigtab` parameters, as described in Section 6.1.11.

6.1.11 Add sysconfigtab Parameters

The Tru64 UNIX operating system includes various subsystems that are used to define or extend the kernel. Kernel variables control the behavior of these subsystems, or track subsystem statistics since boot time.

Kernel variables are assigned default values at boot time. For certain configurations and workloads, especially memory- or network-intensive systems, the default values of some attributes may not be appropriate, so you must modify these values to provide optimal performance. You can modify the values of kernel variable attributes by adding `sysconfigtab` parameters to the `/etc/sysconfigtab` file.

The recommended `sysconfigtab` parameters are provided in the file `/Examples/sysconfigtab` on the *HP AlphaServer SC System Software* CD-ROM. This sample `sysconfigtab` file assumes a memory size of 4GB.

Note:

The `sysconfigdb` commands below will apply the values from this sample `sysconfigtab` file. Before issuing the `sysconfigdb` commands, review the `/cdrom/Examples/sysconfigtab` file.

If necessary, copy the file to a temporary area on your system and modify the values — then specify the location of the modified file in the `sysconfigdb` commands.

Note that the default value for the `shm_max` attribute is 4GB.

To add the recommended `sysconfigtab` parameters on Node 0, perform the following steps:

1. Insert the *HP AlphaServer SC System Software* CD-ROM in the disk drive.
2. If it is not already mounted, mount the CD-ROM (see Section 6.1.7, step 2 on page 6–20).
3. Add the parameters to the `/etc/sysconfigtab` file by running the `sysconfigdb(8)` command as the `root` user, as follows:
   ```
   atlas0# sysconfigdb -m -f /cdrom/Examples/sysconfigtab
   ```
4. When creating a new domain member (see Section 7.4 on page 7–23), the `clu_add_member` command uses the `/etc/.proto..sysconfigtab` file instead of the `/etc/sysconfigtab` file. Therefore, you must update the `/etc/.proto..sysconfigtab` file as follows:
   ```
   atlas0# sysconfigdb -m -t /etc/.proto..sysconfigtab -f
   /cdrom/Examples/sysconfigtab
   ```

For more information about kernel variables and sysconfigtab parameters, see the *Tru64 UNIX System Configuration and Tuning* manual.

You are now ready to run the `sra setup` command, as described in Section 6.2.

6.1.12 Define the RMS Master Node (rmshost)

Define Node 0 to be the RMS master node; that is, the `rmshost` system.

To do this, update the `/etc/hosts` file on the management server, to define `rmshost` as a host alias for Node 0, as shown in the following example:

```
10.128.0.1      atlas0          rmshost
```

If using a C shell, run the `rehash` command, as follows:

```
atlas0# rehash
```

Start the `mSQL` daemon, as follows:

```
atlas0# /sbin/init.d/msqld start
```

You may see an error indicating that the `mSQL` daemon was already running. Ignore this error.

You are now ready to run the `sra setup` command, as described in Section 6.2.

6.2 Set Up the SC Database

Note:

The SC database is new in HP AlphaServer SC Version 2.6. This SQL-based database holds the information that was previously stored in the SRA database (the flat file `/var/sra/sra-database.dat`) and the RMS database (also a SQL-based database).

Set up the SC database on Node 0 by running the following commands as the `root` user:

1. If you have a second rail in each HP AlphaServer ES40 system, but the rail is either currently unconnected or powered off, then you must first remove the second (expansion) elan card from the nodes before performing the `sra install` step. When prompted during the `sra setup` dialog, please answer that the system will have one rail. Later, once the domains are built and all members added, the second rail can be added as a post-installation step by following the instructions in Section 8.12. Please refer to Section 3.5 for details on PCI slot selection rules.
2. Plan the domain attributes (see step 5) and record them in Appendix D.
3. Ensure that all nodes are halted; that is, that they are powered up at the SRM console prompt.

   Note:

   For some system installations that utilise CAA for the RMS service, there is a possibility that rmsbuild will report a warning during `sra setup`. If this warning arises, it can be ignored and the user should answer "yes" to when prompted. The warning is being ignored as it will automatically be handled/fixed later by the CAA startup script for RMS.

4. Run the `sra setup` command to create and populate the SC database, as follows:
   ```
   atlas0# sra setup
   ```
   This information is needed by other sra commands.

5. The `sra setup` command prompts you for the following information:
   - System name[1]
   - Number of nodes
   - Number associated with first domain and node[2]
   - Management Server name
   - Hardware type of the system
   - Number of Cluster Interconnect Rails used in the system
   - Number of domains in the system
   - Management Network IP address
   - Cluster Interconnect IP address for Node 0[3]
   - System Interconnect IP address for Node 0[4]
   - Terminal server model
   - Number of ports on the terminal server
     (if you do not accept the default terminal server model)
   - IP address of first terminal server
   - First port on first terminal server

---

1. The HP AlphaServer SC installation process uses the system name (which cannot end with a digit) to derive both the cluster alias names and the host names of each member in the domain. For example, in a 64-node system with system name `atlas`, the cluster aliases will be `atlasD0` and `atlasD1`, while the node host names will be `atlas0`, `atlas1`, ..., `atlas63`.
   Note that if the number of nodes is less than or equal to 32, the cluster alias name will be the same as the system name — in the above example, the cluster alias name would be `atlas`. If you later increase the number of nodes to 33 or more, you must create a second domain (`atlasD1`), and rename the original cluster alias (from `atlas` to `atlasD0`).
2. Domain and node names in a system typically start at 0, for example `atlasD0`, `atlas0`. However, it is possible to start at a different number, for example `atlasD32`, `atlas1024`.
3. The Cluster Interconnect network is an IP network provided by TruCluster Server. This network only spans a domain. This network is an artifact of the TruCluster Server software and is not intended for end-user use. This network is denoted by the `ics` suffix.
4. The System Interconnect network is layered on the HP AlphaServer SC Interconnect, and spans all nodes connected to the HP AlphaServer SC Interconnect. This network can be configured with externally routable IP addresses (instead of the default 10.* network). For example, this allows you to perform high-speed FTP by routing through high-performance interfaces on externally connected nodes. Note that such use will impact bandwidth availability to parallel jobs. This network is denoted by the `eip` suffix.

- Interconnect Switch IP address at Node Level and Top Level for each Rail
- IP address for the Preferred Server cluster alias base address

6. The `sra setup` command displays these settings and asks you to confirm that they are correct. If any settings are incorrect, enter **`No`** and repeat step 5. When all settings are correct, enter **`Yes`**.
7. The `sra setup` command prompts you whether you would like automatic cluster configuration.

Note:

If you have allocated external node IP addresses and cluster alias IP addresses according to the scheme mentioned in Section 2.2, and if all domains in the system (except possibly the first and last) are to be composed of the same number of nodes, enter **`Yes`** when the `sra setup` command asks you whether to use automatic cluster configuration. If you do, `sra setup` will prompt you for the cluster sizes and two base IP addresses. `sra setup` will check the IP addresses, and then automatically enter configuration information for each cluster into the database, saving you from having to answer several questions for each cluster

---

8. The `sra setup` command prompts you for the following information for each domain:
   - Number of Nodes in the First Cluster
   - Number of Node in Subsequent Clusters
   - External network IP address for First Node
   - IP address for cluster alias
9. The `sra setup` command automatically assigns the IP addresses and prompts you to add the nodes to the database.
10. The `sra setup` command asks if you would like to update the `/etc/hosts` file. Press Return to accept the default answer of **`Yes`**. The `sra setup` command adds an entry to the `/etc/hosts` file for each IP address specified in steps 5 and 7 above.
11. The `sra setup` command asks which host should run console monitor (the `cmf` utility). Press Return to accept the default value (the current node). The `sra setup` command starts `cmf`, and informs you of the location of the `cmf` log file.
12. The `sra setup` command asks if you would like to configure the terminal server(s). Press Return to accept the default answer of **`Yes`**; the `sra setup` command configures the terminal server ports.
13. The `sra setup` command asks if you would like to configure an alternate boot device. Enter **`yes`**.
14. The `sra setup` command asks if you would like to use an alternate boot device. Enter **`yes`**.

15. The `sra setup` command prompts you for the information needed to configure the boot device(s). You can accept the default values for all settings except the SRM device name. To enter a value for the SRM device name, perform the following steps:

    a. Enter the SRM device name for the primary boot disk at the `SRM device name for primary boot disk?` prompt. If you do not know the SRM device name, enter **`probe`**.

    b. If prompted, enter the host name of a generic node that is currently at the SRM prompt. This is only necessary if you entered `probe` in step 15a. above.

       If you enter the host name of a node that is not currently at the SRM prompt, the hardware probe will fail.

    c. The `sra setup` command displays the settings for the primary boot disk, including the SRM device name. To accept these settings, enter **`y`**. To change any setting, enter **`n`**, enter the item number of the setting to be changed, and enter the new value.

    You can set the alternate boot device in a similar way.

    Table 6–8 shows the recommended boot disk partition configuration when the memory size is 4GB and each boot disk is a 36GB disk.

Table 6–8 Recommended Boot Disk Partition Configuration

Partition	Description	Recommended Size (% and GB)	
		Boot Disk Only	**Boot Disk and Alternate Boot**
`b`	swap	30% = 10.8GB	15% = 5.4GB on each disk
`d`	/local	35% = 12.6GB	42% = 15.2GB on each disk
`e`	/tmp	35% = 12.6GB	43% = 15.4GB on each disk

For a 36GB disk, the swap space is calculated as 2.5 times the physical memory size. However, for an 18GB disk, the swap space is calculated as 1.25 times the physical memory size, which you may consider to be too low. Think carefully before accepting the default partition values.

Note:

If you configure an alternate boot disk and have chosen to use the alternate boot disk, its swap space is added to the `sysconfigtab` file; that is, you spread the swap space across the two disks. Also, the `tmp` and `local` partitions on the alternate boot disk are mounted on `/tmp1` and `/local1` respectively. You should take this into account when deciding the partition percentages, as follows:

– If configuring only one boot disk, use the values specified in the third column of Table 6–8.

– If configuring a boot disk and an alternate boot disk, use the values specified in the fourth column of Table 6–8.

16. The `sra setup` command asks for the information needed to configure the primary boot disk.

    Press Return to accept the default answer. The SRM device name is not required to complete the installation.

17. The `sra setup` command asks for the information needed to configure the `Cluster /usr` and `/var` disk.

    Press Return to accept the default answer for all settings. The SRM device name is not required to complete the installation.

    The Disk Location Identifier is required but at this point you can accept the default value. After running `sra setup` the identifiers can be updated using `sra edit` (see Section 7.2).

18. The `sra setup` command asks for the information needed to configure the backup cluster disk.

    Press Return to accept the default answer for all settings. The SRM device name is not required to complete the installation.

    The Disk Location Identifier is required but at this point you can accept the default value. After running `sra setup` the identifiers can be updated using `sra edit`.

19. The `sra setup` command asks for the information needed to configure the generic boot disk.

    Press Return to accept the default answer for all settings. The SRM device name is not required to complete the installation.

    The Disk Location Identifier is required but at this point you can accept the default value. After running `sra setup` the identifiers can be updated using `sra edit`.

20. The `sra setup` command prompts you for the SRM device name and the UNIX device name for the management and external LAN adapters. You can accept the default value, or enter a new value, or use **`probe`** as described in step 15.

Note:

For an external LAN adapter, if the external LAN device name is unknown, you can accept the default SRM device name (for example, `eia0`) but you must enter the appropriate UNIX device name. Page xxix lists the SRM and UNIX device names for the supported network adapters.

21. The `sra setup` command asks if you would like to probe each node in the cluster for its hardware ethernet (MAC) address.

Note:

The `probe` command will return the MAC address of the first network interface only. The `sra edit` command may be used to set the MAC address manually (see Section C.1, step 4 on page C–3).

Enter **`yes`** — the `sra setup` command asks two additional questions:

a. The script asks which nodes you would like to probe.

You can specify a single node (for example, `atlas3`), several nodes (for example, `atlas3,atlas5`), a range of nodes (for example, `atlas[1-8]`), or all nodes (`all`).

Enter **`atlas[1-127]`**.

b. The script also asks if you would like to initialize hardware.

This runs the SRM `init` command on each node. During the probe, SRM console variables are set, as detailed in Table 6–9.

Enter **`yes`**.

Table 6–9 SRM Console Variables

Variable		Value
`auto_action`		`halt`
`boot_reset`		`off`
`boot_osflags`		`A`
`os_type`		`UNIX`
`ocp_text`		*`nodename`*
`eia0_mode` or `eib0_mode`	(`eia0_mode` if the management network interface is the first network adapter on the node; otherwise, the device name could be `eib0_mode`)	`FastFD`
`console`		`serial`
`sys_com1_rmc`		`off`

If any nodes fail the hardware probe, a list of failed nodes is written to the `/tmp/sra_hosts.failed` file. A node may fail the hardware probe because it is not at the SRM prompt, or because `cmf` is misconfigured — see Section 11.6 on page 11–11 for more details.

Note:

If you specified **`all`** in step a on page 6–29, you will get a message that Node 0 has failed the hardware probe — ignore this message. Node 0 fails the hardware probe because it is not at the SRM prompt. If you wish, you can set MAC address manually using the `sra edit` command (see Section C.1, step 4 on page C–3).

The `sra setup` command asks if you would like to reset the failed nodes. Enter **`Yes`**.

The `sra setup` command asks if you would like to retry the hardware probe. Enter **`Yes`**.

The `sra setup` command asks if you would like to initialize the hardware during the probe. Enter **`Yes`**.

22. The `sra setup` command asks if you would like to add nodes to the RIS database. Press Return to accept the default answer of **`Yes`**. The `sra setup` command configures each node as a RIS client. During the Configure RIS section of `sra setup`, you are asked if you would like to add domains to RIS. Press Return to accept the default answer of **`Yes`**.
23. The `sra setup` command will now prompt to add two root crontab entries (one crontab for archiving the `cmf` logs and one crontab for backing up the RMS database). Press Return to accept the default answer of **`Yes`** to both questions. The `cmf` archives will be archived every two weeks and the RMS database backup will take place nightly.
24. The `sra setup` command saves all information to the database, and then exits.

Note:

After the SC database has been created, the `sra setup` command completes the installation of the SRACFENGINE subset by running the `cfconfig` script on Node 0.

The `cfconfig` command automatically runs on each cluster node when the node is first booted. The `cfconfig` command examines the local host to populate the appropriate files with default values. The `cfengine` daemon (`cfd`) starts for the first time after the `cfconfig` command has run.

If DNS has not been configured on the system, the `cfconfig` command will print an error message when it cannot find `/etc/resolve.conf`. This is normal. `cfengine` cannot operate unless DNS has been configured. You can run `cfconfig` at a later stage once DNS is configured.

If you later wish to change any of the data in the SC database, use the `sra edit` command (see Chapter 16 of the *HP AlphaServer SC System Administration Guide*) — it is not necessary to rerun the `sra setup` command.

See Appendix E for an example `sra setup` log file.

Note:

Now that you have set up the SC database, you can use the `sra -c|cl|m|ml` command on Node 0 to connect to the console of any system in the cluster. See Chapter 16 of the *HP AlphaServer SC System Administration Guide* for more information about the `sra -c|cl|m|ml` command.

You are now ready to configure out all nodes, as described in Section 6.3.

6.3 Configure Out All Nodes During Installation

While the installation is progressing, it is necessary to configure out all nodes. If the nodes are left configured in, then there will be many unwanted events reporting the fact that the nodes are not responding. Configuring out the nodes will reduce the load on the `mSQL` daemon by the RMS `mmanager` and `eventmgr`. You should configure out the nodes as follows:

```
atlas0# rcontrol configure out nodes "atlas[0-1023]"
```

In Configure the RMS Database (see Section 8.5 on page 8–10) you will have the opportunity to create the desired partition configuration and to configure in the nodes again.

You are now ready to check all nodes in the system, as described in Section 6.4.

6.4 Check All Nodes in the HP AlphaServer SC System, Except Node 0

Check all of the nodes in the system by performing the following steps:

- Check the State of the Nodes (see Section 6.4.1 on page 6–31)
- Check the System Firmware (see Section 6.4.2 on page 6–32)

6.4.1 Check the State of the Nodes

The `sra diag` command examines the HP AlphaServer ES40 node using various SRM and RMC commands, and gathers as much data as possible about the state of the specified node(s).

Run the `sra diag` command on all nodes, as follows:

```
atlas0# sra diag -nodes 'atlas[1-1023]' -analyze no
```

Review the /var/sra/diag/*nodename*.sra_diag_report files to check for errors or warnings.

You are now ready to check the system firmware, as described in Section 6.4.2.

6.4.2 Check the System Firmware

Table 6–10 lists the minimum firmware versions supported by HP AlphaServer SC Version 2.6 for an HP AlphaServer ES40, an HP AlphaServer ES45, and an HP AlphaServer DS20L system.

Table 6–10 Minimum System Firmware Versions

Firmware	HP AlphaServer ES40	HP AlphaServer ES45	HP AlphaServer DS20L
SRM Console	6.2-1	6.2-8	6.3-1
ARC Console	5.71	Not Displayed	Not Displayed
OpenVMS PALcode	1.96-103	1.96-39	1.90.71
Tru64 UNIX PALcode	1.90-104	1.90-30	1.86.68
Serial ROM	2.12-F	2.20-F	Not Displayed
RMC ROM	1.0	1.0	Not Displayed
RMC Flash ROM	2.5	1.9	Not Displayed

Check that all nodes in your system meet these minimum system firmware requirements, by performing the following tasks:

1. Run the `show config` command on all nodes and save the output to file, as follows:
   ```
   atlas0# sra command -nodes all -command 'show config' |tee /tmp/fw.txt
   ```
   (press Return when prompted for the root password)
2. View the SRM console firmware version:
   ```
   atlas0# grep -i 'SRM Console' /tmp/fw.txt
   ```
3. View the ARC console firmware version:
   ```
   atlas0# grep -i 'ARC Console' /tmp/fw.txt
   ```
4. View the UNIX PALcode firmware version:
   ```
   atlas0# grep -i 'PALcode' /tmp/fw.txt
   ```
5. View the Serial ROM firmware version:
   ```
   atlas0# grep -i 'Serial Rom' /tmp/fw.txt
   ```

6. View the RMC ROM firmware version:
   ```
   atlas0# grep -i 'RMC Rom' /tmp/fw.txt
   ```
7. View the RMC Flash ROM firmware version:
   ```
   atlas0# grep -i 'RMC Flash Rom' /tmp/fw.txt
   ```
8. Delete the output file:
   ```
   atlas0# rm /tmp/fw.txt
   ```

If necessary, update the system firmware, as described in Chapter 21 of the *HP AlphaServer SC System Administration Guide*.

You are now ready to configure and diagnose the HP AlphaServer SC Interconnect, as described in Section 6.5.

6.5 Configure and Diagnose the HP AlphaServer SC Interconnect

It is **vital** that these sections be performed at exactly this point in the installation.

If you neglect to perform these steps, then the remainder of the installation will have problems and there will be no way to diagnose the root cause. Rather than duplicate the text from the *HP AlphaServer SC Interconnect Installation and Diagnostics Manual*, this section contains a number of references to the relevant sections of that guide. Please be careful not to miss any steps as you refer to the sections. All steps are mandatory for successful operation of the diagnostic tools.

6.5.1 Upgrading the HP AlphaServer SC Interconnect Control Processor Software

Note:

This section does not apply to HP AlphaServer SC 16-port switches or old-type HP AlphaServer SC 128-way switches. Such switches are known as directly-connected switches, and do not have any firmware. This section only applies to the new-type HP AlphaServer SC 128-way switches containing an HP AlphaServer SC Interconnect control processor.

In HP AlphaServer SC Version 2.6, the software (also known as firmware) running on the HP AlphaServer SC Interconnect Control Processors has changed, and must be upgraded. The new software image is packaged in the SWM subset, which is part of the HP AlphaServer SC Version 2.6 System Software.

You should follow the steps in Section 7.2, Upgrading the HP AlphaServer SC Interconnect Control Processor Software and all subsections, of the *HP AlphaServer SC Interconnect Installation and Diagnostics Manual*.

6.5.2 Creating an Interconnect Configuration Using SC Viewer

To receive accurate status and diagnostic information about the HP AlphaServer SC Interconnect, it is mandatory to create an Interconnect Configuration using SC Viewer. This will allow the switch managers to report anomalies in the network and it will allow the command line diagnostic tools to make pass/fail decisions based on the configured size of the network versus the detected size of the network. Once configured, SC Viewer will also allow the user to view the interconnect configuration and events which is very important in identifying problem locations.

You should follow Section 7.3, Creating an Interconnect Configuration Using SC Viewer and all subsections, of the *HP AlphaServer SC Interconnect Installation and Diagnostics Manual*.

6.5.3 Confirming the Operation of the HP AlphaServer SC Interconnect

At this stage, the database and nodes will be in suitable condition to perform an initial sweep of diagnostics.

The following diagnostics should be performed:

- Assign a common clock source per rail (see Section 7.4.1 of the *HP AlphaServer SC Interconnect Installation and Diagnostics Manual*)
- Verify the clock frequency on each switch module (see Section 7.4.2 of the *HP AlphaServer SC Interconnect Installation and Diagnostics Manual*)
- Use `elanenvtest` to verify the switch modules (see Section 7.4.3 of the *HP AlphaServer SC Interconnect Installation and Diagnostics Manual*)
- Show links in reset (see Section 7.4.4 of the *HP AlphaServer SC Interconnect Installation and Diagnostics Manual*)
- Run `elanpcitest` on all nodes (see Section 7.4.5 of the *HP AlphaServer SC Interconnect Installation and Diagnostics Manual*)
- Run `elanlinktest` on all nodes (see Section 7.4.6 of the *HP AlphaServer SC Interconnect Installation and Diagnostics Manual*)
- Run `riscabletest` on each node-level switch (see Section 7.4.7 of the *HP AlphaServer SC Interconnect Installation and Diagnostics Manual*)

The remaining diagnostics will be performed once the system nodes are installed (see Chapter 8).

You are now ready to set up the SC Monitor System, as described in Section 6.6.

6.6 Set Up the SC Monitor System

After completing the installation steps in Section 6.2, the SC Database is populated with default entries. As there are many existing configurations, it is possible that the database may not reflect entirely the system configuration. For example, it is possible that your system may have more terminal servers than are added by default, or more switches.

Some devices, like HSG and SAN Appliance, are not added automatically in the database as monitored devices at install time, so it is necessary to add these devices if you want to monitor the device status.

Setting Up the SC Monitor system involves the following tasks:

- Add a SAN Appliance as Monitored Devices (see Section 6.6.1 on page 6–35)
- Change Terminal Servers Monitoring Distribution (see Section 6.6.2 on page 6–35)
- Change Extreme Switches Monitoring Distribution (see Section 6.6.3 on page 6–36)
- Activate the Changes (see Section 6.6.4 on page 6–37)

6.6.1 Add a SAN Appliance as Monitored Devices

The `sra setup` command does not add any entry for SAN Appliance devices. To monitor this type of device, add the device manually as a monitored device by using the `scmonmgr add command`. The command syntax is as follows:

```
scmonmgr add -c appliance -o object -i ip-addr -s server [-r rack -u unit]
```

For example:

```
atlasms# scmonmgr add -c appliance -o sanapp0 -i 16.21.24.13 -s atlasms
```

This command adds the SAN Appliance with `IP 16.21.24.13` as a monitored device with name `sanapp0`. The node that will perform the monitoring functions will be `atlasms`.

6.6.2 Change Terminal Servers Monitoring Distribution

Immediately after installation (when `sra setup` has completed), the terminal servers specified are added as monitored devices. All terminal servers are initially monitored by the management server, if there is a management server, or by the first domain otherwise.

To see the initial distribution for terminal server monitoring functions, run the following command:

```
atlasms# scmonmgr distribution -c tserver
```

Example (server `atlasms` monitors all 8 terminal servers from the system):

```
atlasms# scmonmgr distribution -c tserver
Class: tserver
Server atlasms monitors: atlas-tc[1-8]
```

```
atlasms#
```

To add additional terminal servers to be monitored by the system, use the `scmonmgr add` command.

Example:

```
atlasms# scmonmgr add -c tserver -o atlas-tc9 -s atlasms
```

Note:

A terminal server cannot be added if there is no entry for it in the `/etc/hosts` file. The system needs to know the IP address of the terminal server.

To change the distribution of the monitoring for terminal servers, use the `scmonmgr move` command as follows:

```
atlasms# scmonmgr move -o atlas-tc2 -s atlas10
```

After this `atlas10` will perform the monitoring for `atlas-tc2`.

6.6.3 Change Extreme Switches Monitoring Distribution

The `sra setup` process creates default entries for Extreme switches in the SC database using the following rules:

- If the number of nodes in the system is less than or equal to 16, a single Extreme switch of type Summit24 will be added as a monitored device.
- If the number of nodes is between 16 and 128 (including 128), the setup process adds three Summit48 switches for monitoring.
- If the number of nodes is greater than 128, the number of switches added for monitoring is calculated using the following expression: *{number of nodes from system / 32}*. So for a 255 nodes system, we will have *255/32 = 7* Summit48 switches added by default as monitored devices.

This model was established based on the standard configuration of the systems, but in real life it is possible that a system may not respect these rules and a post-install customization will be necessary.

If necessary, you can add/remove Extreme switches from the monitoring system by using `scmonmgr` command.

For example:

1. To add an Extreme switch as a monitored device

   ```
   atlasms# scmonmgr add -c extreme -o extreme10 -i 10.128.103.10 -s atlasms
   ```

2. To remove an Extreme switch as a monitored device
   `atlasms# scmonmgr remove -o extreme10`

The monitoring of all Extreme switches is initially set to be performed by the management server if the system has one, or by the first domain otherwise. But this can be changed using the `scmonmgr move` command.

6.6.4 Activate the Changes

After you have finished all the tasks required to change/customize the monitoring and distribution of the monitoring for a system, it is necessary to activate these changes by sending a `reload` command to the monitoring daemons running on all nodes of the system.

Before doing this, you can analyse and display the distribution of the monitoring for the entire system by using the following command:
`atlasms# scmonmgr distribution`

If you are satisfied, send the `reload` command to the daemons on each management server and domain. The monitoring daemon has a reload mechanism that works on domain level. If you send a `reload` command to a daemon (node) from a domain this will trigger the reload for all daemons from that domain.

To start the reload process for all the daemons on all domains in the system, run the following command:
`atlasms# scrun -d all '/sbin/init.d/scmon reload'`

This will send the reload signal (`SIGHUP`) to one node from each domain, and will trigger the reload procedure on all members from that domain.

After this, it is necessary to run the reload command on the management server:
`atlasms# /sbin/init.d/scmon reload`

For more information on SC Monitor management, refer to Chapter 27 of the *HP AlphaServer SC System Administration Guide*.

You are now ready to assign cabinets in the SC Database, as described in Section 6.7

6.7 Assign Cabinets in the SC Database

The *Physical* view in the `scviewer` needs to know about how your HP AlphaServer SC system is packaged, which cabinets hold nodes, terminal servers, and other pieces of hardware. The sysman *sc_cabinet* menu is used to load this information into the SC Database.

Note:

You can skip this step now and perform it later. However, until you complete this step, the `scviewer` program will be unable to display the physical relationships between hardware components.

Also, if you are already running `scviewer`, please close it down before proceeding, as the *Physical* view will not correctly reflect the cabinet changes you are making until `scviewer` is restarted.

6.7.1 Load the Physical Relationships

To load the physical relationships, you should follow these steps:

1. Create a description of cabinets in the SC Database.

   Each cabinet (or rack) has the following data associated with it:

   - Number. Each cabinet has a unique number (starting at 1).
   - Label. In this release, the label can be blank or the same as the number. In a later release, you can assign a meaningful label to each cabinet.
   - Area. This allows you to group cabinets into different rooms or different areas within a room. A small system would probably have one area - a large system might have several. The area concept is used by the scviewer when displaying cabinets, so it helps if an area is smaller than 20 rows of 30 cabinets (these numbers are guidelines, you can have larger numbers).
   - Position within area. The position of a cabinet within an area is specified by a row and column number. If you drew a plan of your cabinets (as scviewer does), row 1, column 1 is on the top left. Row numbers increase as you move downwards and column numbers increase as you move to the right.

2. You can use the sysman *sc_cabinet* menu to create the cabinets in an area as follows:
   - Start the sysman *sc_cabinet* menu (as root):
     `atlas0# sysman sc_cabinet`
   - Select the Create block of cabinets... option
   - Specify the Area Name, First cabinet number, the label style and the number of rows and columns you want.
   - Click on Next, and confirm your choices by clicking on OK. A block of cabinets in this area is now created in the SC Database.

3. You can repeat these steps several times for different areas or for different blocks of cabinets.

6.7.2 Populate Cabinets with Nodes

You can populate a block of cabinets with a range of nodes as follows:

1. Start the sysman *sc_cabinet* menu (as root):
   ```
   atlas0# sysman sc_cabinet
   ```
2. Select the Assign nodes... option
3. Enter the range of nodes that are to be placed into the cabinets.

   Note:

   The first node number should be 0 if the first node name is `atlas0`.

4. Enter the range of cabinet numbers where these nodes are located
   - Nodes can be placed top to bottom (the first node is on top, last on bottom) or vice versa.
   - Nodes can be placed into the cabinet range first to last (the first node is placed into the first cabinet, the last node is placed into the last cabinet) or vice versa.
5. Click OK to confirm you choices. The SC Database is updated to reflect this node placement.
6. You can repeat these steps several times for different ranges of nodes.

6.7.3 Populate Cabinets with Other Hardware

You can populate cabinets with other hardware (terminal servers, and so on) as follows:

Note:

If you wish to modify the properties of one or more existing cabinets (for example, to contain additional hardware) select the cabinet, and click the Modify option, to edit the contents as described in Step 5.

1. Start the sysman *sc_cabinet* menu (as `root`):
   ```
   atlas0# sysman sc_cabinet
   ```
2. Select the Cabinets... option.

   This shows a menu where all existing nodes are listed.
3. Select Add.. to add a new cabinet.
4. Specify a unique number, label, area, row and column. Click OK to create the cabinet in the SC Database.

5. The Edit a cabinet dialog box now appears. This allows you to place hardware components into the cabinet. A list on the right shows the Unassigned Objects—that is the hardware components that have no record of their location in the SC Database. The list does not show nodes—instead it shows other types of hardware component (terminal server, Extreme Switch, and so on).
6. To place a hardware component in the cabinet, select the component and click on the Move button. This places the component into the cabinet—so it appears in the Cabinet Contents list on the left.
7. You can reorder components in the cabinet by selecting the component and clicking on the Up and Down buttons.
8. To confirm your changes, click OK. The SC Database is updated.

The Cabinets... option also allows you to modify or delete existing cabinets.

When you have finished modifying the cabinet data in the SC Database, you can review the data using the Make report... option. This menu allows you to specify a file where a textual description of the data is saved. The data is saved in a format that allows subsequent machine processing rather than being human readable.

You are now ready to review the SC Database Settings, as described in Section 6.8.

6.8 Review the SC Database Disk Settings

The `sra setup` command gathers information on disk usage. You should review this information now, in particular the Disk Location Identifiers assigned to the cluster and generic boot disks. When using RAID, the UNIX device name assigned to each of the RAID disks is not guaranteed to be in ascending order. For example `dsk3` (assuming 3 local disks), typically associated with the cluster disk, will not necessarily be the RAID disk configured to be the cluster disk.

Note:

For SC20, the location ID for the UNIX disk should also be reviewed and set appropriately.

To map a UNIX device name to a RAID disk, use the RAID disk identification label assigned in Table 3–12.

For example the cluster disk for `atlasD0` has an identification label 'IDENTIFIER=1' and the generic boot disk for `atlasD0` has an identification label 'IDENTIFIER=2'. The Disk Location Identifiers in the SC database should be updated to reflect the identifiers used. Use the `sra edit` command to update the identifiers assigned to each cluster as follows:

```
atlas0# sra edit
sra> sys
sys> edit cluster atlasD0

Id   Description                                  Value
------------------------------------------------------------------
[0  ] Cluster name                          atlasD0
[1  ] Cluster alias IP address              site-specific
[2  ] Domain Type                           fs
[3  ] First node in the cluster             0
[4  ] I18n partition device name
[5  ] SRA Daemon Port Number                6600
[6  ] File Serving Partition                0
[7  ] Number of Cluster IC Rails            1
[8  ] Image Role                            cluster
[9  ] Image name                            first
[10 ] UNIX device name                      dsk6
[11 ] SRM device name
[12 ] Disk Location (Identifier)            IDENTIFIER=5
[14 ] root partition size (%)               5
[15 ] root partition                        b
[16 ] usr partition size (%)                50
[17 ] usr partition                         g
[18 ] var partition size (%)                45
[19 ] var partition                         h
[27 ] Image Role                            gen_boot
[28 ] Image name                            first
[29 ] UNIX device name                      dsk5
[30 ] SRM device name
[31 ] Disk Location (Identifier)            IDENTIFIER=6
[33 ] root partition size (%)
[34 ] root partition
[35 ] usr partition size (%)
[36 ] usr partition
[37 ] var partition size (%)
[38 ] var partition
[46 ] Image Role                            unix
[47 ] Image name                            first
[48 ] UNIX device name                      dsk7
[49 ] SRM device name
[50 ] Disk Location (Identifier)
[52 ] root partition size (%)               10
[53 ] root partition                        a
[54 ] usr partition size (%)                35
[55 ] usr partition                         g
[56 ] var partition size (%)                35
[57 ] var partition                         h

------------------------------------------------------------------

Select attributes to edit, q to quit
eg. 1-5 10 15
```

```
edit?  12 31
Disk Location (Identifier)              [IDENTIFIER=5]
new value? IDENTIFIER=1
Disk Location (Identifier)              [IDENTIFIER=6]
new value? IDENTIFIER=2

Disk Location (Identifier)              [IDENTIFIER=1]
Disk Location (Identifier)              [IDENTIFIER=2]
Correct? [y|n] y
sys>
```

When using `sra edit` for larger systems, it is recommended you take the following steps:

1. Create a file in the following format:
   `domain_name disk image identifier`

   where:

   `domain_name` is the default cluster alias e.g. `atlasD0`

   `disk` is typically either cluster or gen_boot

   `image` is the image name: first or second

   `identifier` is the disk label in the form IDENTIFIER=1

   The following is a sample file:

```
atlasD0 cluster   first  IDENTIFIER=1
atlasD0 gen_boot  first  IDENTIFIER=2
atlasD1 cluster   first  IDENTIFIER=4
atlasD1 gen_boot  first  IDENTIFIER=5
atlasD2 cluster   first  IDENTIFIER=7
atlasD2 gen_boot  first  IDENTIFIER=8
atlasD3 cluster   first  IDENTIFIER=10
atlasD3 gen_boot  first  IDENTIFIER=11
```

2. Using `sra edit` load this data into the SC database as follows (assuming the file created is `/var/sra/disk_id`):

```
sra> sys
sys> update
update hosts
update cmf
update ris <nodes>
update ds <nodes>
update diskid <filename>
sys> update diskid /var/sra/disk_id
Disk Location Identifiers loaded successfully
sys>
```

6.9 Transform Node 0 into a Single Node Domain

In Section 6.1, you installed the HP AlphaServer SC system software on Node 0. This section describes how to transform Node 0 into a single node domain using the `sra install` command. You can later install, clusterize, and add members on each domain, as described in Chapter 7.

Create the first domain member by running the following command on Node 0 (as the `root` user where `atlas` is an example system name):

```
atlas0# sra install -nodes atlas0
```

This command performs the following tasks:

a. Partitions the boot disk, and the alternate boot disk (if specified), using the `createbootlabel` command.

b. Partitions the cluster disk, and the backup cluster disk (if specified), using the `createclusterlabel` command.

c. Creates the first domain member.

   The `sra install` command performs the following tasks:

   - Checking
   - Creating disk labels
   - Creating AdvFS domains
   - Populating the cluster `/`, `/usr`, and `/var`[1]
   - Creating CDSLs
   - Modifying configuration files
   - Building the kernel

To display information on the sra commands, use the following command:

```
atlasms# sra command_info
```

Note:

After performing the above steps, the node automatically reboots as a single node domain.

6.10 Run the HP AlphaServer SC Interconnect Tests on Node 0

In Section 6.5 on page 6–33, you ran the HP AlphaServer SC Interconnect tests on all nodes except Node 0. Now run the HP AlphaServer SC Interconnect tests on Node 0, as follows:

1. Change to the directory in which the diagnostic scripts are stored, as follows:
   ```
   atlas0# cd /usr/opt/qswdiags
   ```
2. Run the `elanpcitest` script, to check that Node 0 can access its HP AlphaServer SC Elan adapter card across its PCI bus, as follows:
   ```
   atlas0# ./elanpcitest
   ```

1. This step may take some time (about 20 minutes); the blinking cursor indicates that the command is running and has not hung.

- If the `elanpcitest` script completes successfully, the output is as follows:
```
elanpcitest: accessing Network Adapter memory, please wait
elanpcitest: test completed successfully
```
- If the `elanpcitest` script fails, the output is as follows:
```
elanpcitest: accessing QM401 Network Adapter memory, please wait
elanpcitest: test failed
```
  Check that the HP AlphaServer SC Elan adapter card is correctly seated in Node 0.

3. Run the `elanlinktest` script, to check that the Node 0 HP AlphaServer SC Elan adapter card can access the HP AlphaServer SC Interconnect switch, as follows:
```
atlas0# ./elanlinktest
```
   - If the `elanlinktest` script completes successfully, the output is as follows:
```
elanlinktest: testing connection from network adapter to network switch card
elanlinktest: test completed successfully
```
   - If the `elanlinktest` script fails, the output is as follows:
```
elanlinktest: testing connection from network adapter to network switch card
elanlinktest: test failed
```
     If the `elanlinktest` script fails, check the following components:
     – The cable connecting Node 0 to the HP AlphaServer SC Interconnect switch
     – The HP AlphaServer SC Elan adapter card in Node 0

4. Run the `cabletest` on Node 0 as follows:
```
atlas0# cd /usr/opt/qswdiags
```
   Run the test directly on the node as follows:
```
atlas0#./cabletest
```

The HP AlphaServer SC system is now in the following state:

- The Tru64 UNIX operating system has been installed and configured on Node 0.
- The HP AlphaServer SC software has been installed on Node 0.
- The SC database has been created on Node 0.
- Node 0 has been clusterized and is running as a single-node domain.
- All other nodes are uninstalled, and at the SRM prompt. Check that all domain members are at the SRM prompt:
```
atlas0# sra info -nodes 'atlas[1-1023]'
```
  Nodes not at the SRM prompt should be shutdown or halted.

You are now ready to build the domains, as described in Chapter 7 (*Building the Domains*).

7
Building the Domains

By following the instructions in earlier chapters, you have manually installed and configured one host: either the management server (see Chapter 5) or Node 0 (see Chapter 6). This chapter describes how to use this manually-installed host to build the domains.

Note:

Do not proceed with this chapter until you have completed the manual installation and configuration of the first host.

The information in this chapter is organized as follows:

- Understanding the Automated Installation Process (see Section 7.1 on page 7–1)
- Review the SC Database System Settings (see Section 7.2 on page 7–14)
- Add sysconfigtab Parameters (see Section 7.3 on page 7–23)
- Create the Domains (see Section 7.4 on page 7–23)
- Boot the System (see Section 7.5 on page 7–25)
- Complete the Setup of the Domains (see Section 7.6 on page 7–25)

7.1 Understanding the Automated Installation Process

The information in this section is organized as follows:

- SC Database Installation Tables (see Section 7.1.1 on page 7–2)
- The sra install Command (see Section 7.1.2 on page 7–2)
- The Installation Daemon (see Section 7.1.3 on page 7–2)
- Installation States (see Section 7.1.4 on page 7–3)
- Monitoring the Installation State (see Section 7.1.5 on page 7–4)

7.1.1 SC Database Installation Tables

The installation steps performed are determined by the interaction between data in two database tables:

- `sc_command` Table - contains the following domain specific information:
  - The command performed (for example `install`, `boot`, `shutdown`)
  - The command status and associated message (`failed`, `completed`)
  - The desired installation state of the domain (see Table 7–1)
- `sc_nodes` Table - contains an entry for each node, and each entry has a `current_state` and a `desired_state`.

The database entries and values assigned capture the state of the system as it transitions from `Uninstalled` to `Member_Added`.

7.1.2 The sra install Command

The `sra install` command automates the installation of domains. When you have manually installed one host (either the management server, if used, or Node 0), you can build all of the domains by running a single `sra install` command. You can also run the `sra install` command to complete the installation of a partially built domain. The `sra install` command determines the steps required to change each domain from its current installation state to the desired installation state, and then performs the identified steps.

7.1.3 The Installation Daemon

The `sra install` command works with the installation daemon (`srad`). One `srad` daemon runs on the management server (when the system has a management server), and one `srad` daemon runs on each domain.

The `srad` daemon on the management server performs the following installation steps on the first node of each domain:

1. RIS-installs the Tru64 UNIX operating system.
2. Configures the Tru64 UNIX operating system.
3. Installs the Tru64 UNIX patch software.
4. Installs the HP AlphaServer SC software.
5. Installs the HP AlphaServer SC patch software.
6. Installs the New Hardware Delivery (NHD) software.
7. Starts the `srad` daemon on the first node of each domain.

The srad daemon runs on the first node of each domain and completes the installation as follows:

1. Runs the clu_create command to clusterize the first node of the domain.
2. Performs the following steps on each domain member:
   a. Runs the clu_add_member command to add the node to the domain.
   b. RIS-boots the node and downloads the boot partitions from the first node of the domain.
   c. Boots genvmunix
   d. Shuts the member down to the SRM prompt.

Note:

The log files for the srad daemon is located in the directory: /var/sra/adm/log/srad.

7.1.4 Installation States

The current installation state of a domain will change during the installation process. During a complete installation, a domain will change through several installation states from Uninstalled to Member_Added, as described in Table 7–1.

Table 7–1 Installation States

Installation State	Description
Uninstalled	No Tru64 UNIX or HP AlphaServer SC software has been installed on the domain
UNIX_Installed	The Tru64 UNIX operating system has been installed on the first node of the domain
UNIX_Config	The Tru64 UNIX operating system has been configured on the first node of the domain
UNIX_Patched	The Tru64 UNIX operating system patch software has been installed on the first node of the domain
SC_Installed	The HP AlphaServer SC software has been installed on the first node of the domain
SC_Patched	The HP AlphaServer SC patch software has been installed on the first node of the domain

Table 7–1 Installation States

Installation State	Description
NHD_Installed	The New Hardware Delivery software has been installed on the first node of the domain
CLU_Create	The first node of the domain has been clusterized
CLU_Added	The remaining nodes have been added to the domain
Bootp_Loaded	The boot partitions have been downloaded to each node in the domain, from its first node
Member_Added	All members have been added (to the domain), booted, and shut down to the SRM prompt

The installation process is incremental. A domain cannot change to a particular installation state until it has passed through all of the previous installation states. If any step fails, you can rerun the `sra install` command and the `srad` daemon will restart the installation process from the last successful step. The `srad` daemon determines the installation steps required for each domain, based on the current installation state and desired installation state of the domain.

Note:

The installation process assumes that each domain may be in a different installation state.

To partially build a system, you can use the `sra install` command with the `-endstate` option. Table 7–1 lists the installation states that can be specified.

7.1.5 Monitoring the Installation State

This section contains the following information:

- Displaying Information on sra Commands (see Section 7.1.5.1 on page 7–5)
- Querying Node Installation Status (see Section 7.1.5.2 on page 7–5)
- Starting the Monitor Utility (see Section 7.1.5.3 on page 7–5)
- Filtering Views of Installation Progress (see Section 7.1.5.4 on page 7–11)

7.1.5.1 Displaying Information on sra Commands

Use the `sra command_info` command to display information on `sra` commands. Use the `-states` flag to specify which command states to display. The possible states are Allocated, Unallocated, Success, Error, and Abort.

7.1.5.2 Querying Node Installation Status

Use the `sra install_info` command to monitor the status of installation on specific nodes. The command provides information similar to the `sramon` utility (see Section 7.1.5.3). The syntax is as follows:

```
atlasms# sra help install_info

sra install_info {-nodes <nodes> | -domains <domains> | -members <members>}
[...] [-display <yes|no>]
```

The following shows sample output from the `sra help install_info` command on a specified domain:

```
atlasms# sra install_info -dom 0

================================================================================
Node Name        Current State    Desired State    Commands Status
------------ -------------- -------------- -------- -------------------
atlas0           Member_Added     Member_Added     Finished
atlas1           Member_Added     Member_Added     System-Up
atlas2           Member_Added     Member_Added     System-Up
atlas3           Member_Added     Member_Added     System-Up
atlas4           CLU_Create       Member_Added     Error: failed to RIS boot
atlas5           Member_Added     Member_Added     System-Up
atlas6           Member_Added     Member_Added     System-Up
atlas7           Member_Added     Member_Added     System-Up
================================================================================
CLU_Create: atlas4
Member_Added: atlas[0-3,5-7]
================================================================================
#
```

7.1.5.3 Starting the Monitor Utility

The `sramon` utility is used to monitor the progress of an installation on the system of domains.

Start the `sramon` utility by running the following command:

```
atlasms# sramon &
[1] 6899
atlasms #
```

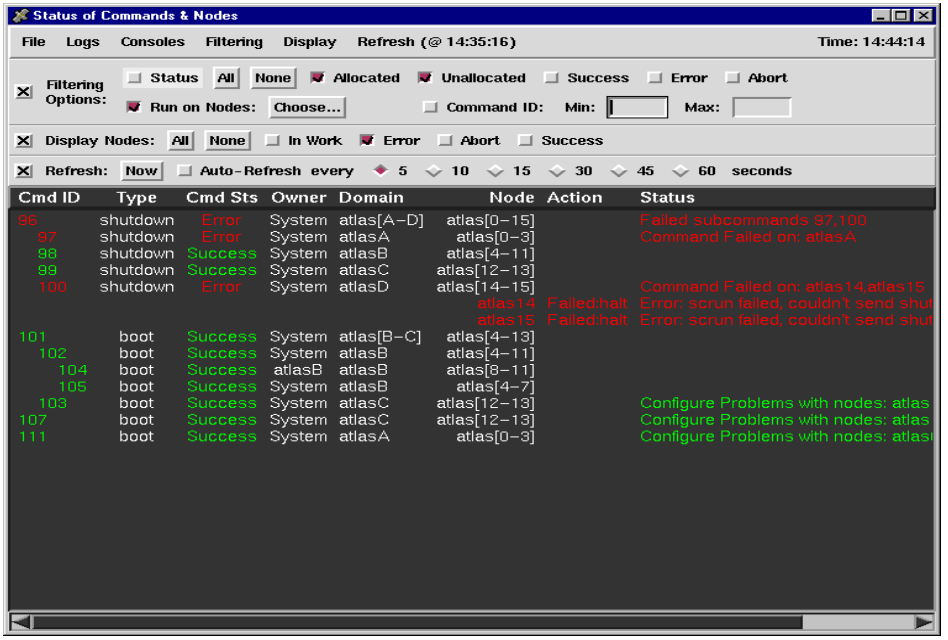

Figure 7–1 Status of Commands and Nodes

Table 7–2 describes the menu items:

Table 7–2 Status of Commands and Nodes Menu Items

Menu Item	Description
File - Exit	Used to exit the monitor
Logs	Used to view the `srad` log for selected nodes
Consoles	Used to view console output for selected nodes
Filtering	Used to select filtering options
Display	Used to select nodes to display
Refresh	Used to specify auto-refresh settings or refresh current display

Note:

To exit an `sra` command from within the monitor, select the Dismiss option from the File menu.

The menu bar contains the following additional items (when the menu bar is expanded):

- Filtering Options allowing you to filter by:
  - Command Status
  - Run on Nodes (atlas0 to atlas7)
  - Command ID
- Display Nodes
  - All, None, In Work, Error, Abort, Success
- Refresh Options and Details allowing you to:
  - View current time and last refresh time
  - Specify auto-refresh or immediate refresh

Table 7–3 describes the information displayed in the main window (Figure 7–1):

Table 7–3 Status of Commands and Nodes Window

Column	Description
Cmd ID	The command ID / number.
Type	The command type (`install`).
Cmd Sts	The status of the command (allocated, unallocated, success, error, abort).
Owner	The owner of the command (`system`)
Domain	The domain where the activity is being monitored (`atlasD0`)
Node	The node in the domain where the activity is being monitored
Action	The action being performed on the node
Status	The current installation status on the node

Log Menu Items

Use the Log menu items to display log file details of installation on the selected domain.

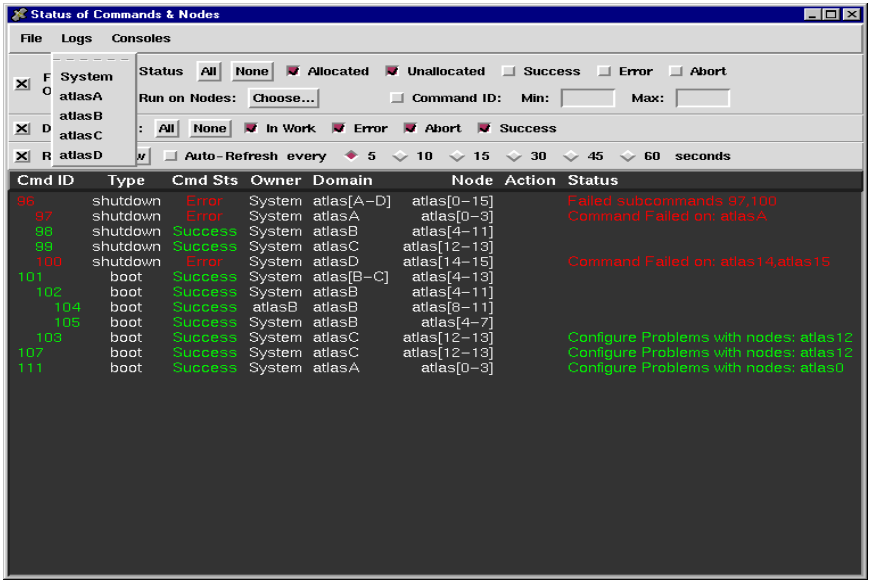

Figure 7–2 Log Menu Items

Select an option from the menu to open a new screen that displays the log file detail for the selected system or domain (`atlasD0`, `atlasD1`, `atlasD2`, `atlasD3`). Select the Systems option to display the `srad` log from either the management server or from Node 0.

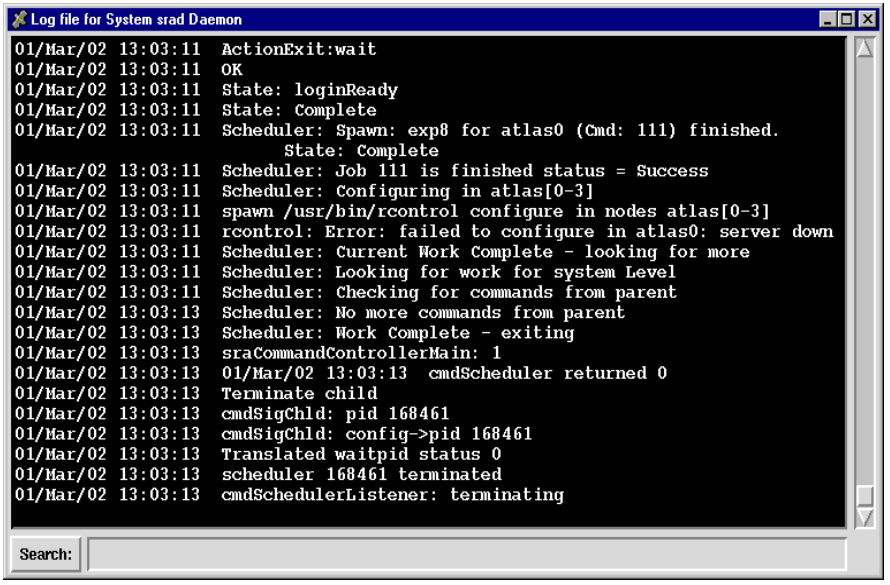

Figure 7–3 Sample Log File

Console Menu Items

This section describes the Console menu. Use this option to view the console output for a node. The console logs are saved in `/var/sra/log/cmfd`. The log file contains the nodes console output. Figure 7–4 shows sample console output.

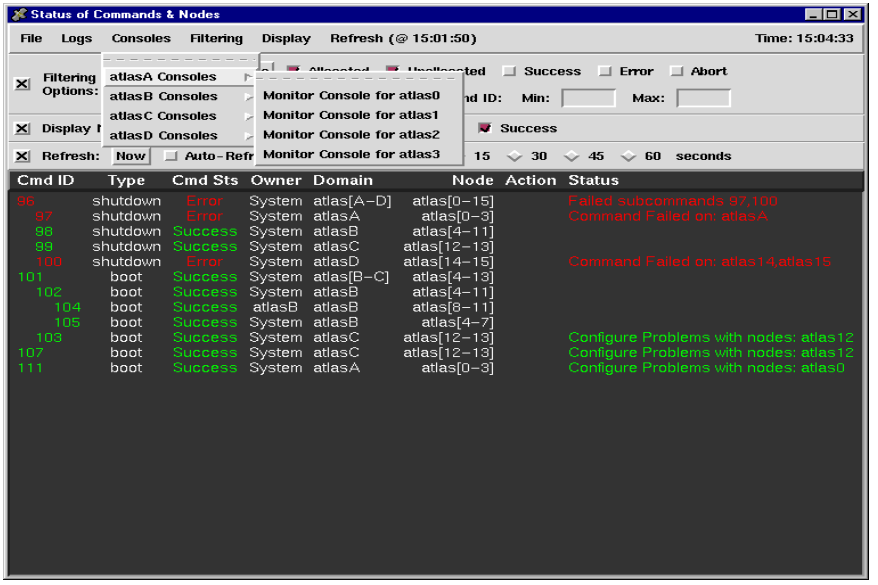

Figure 7–4 Console Menu Items

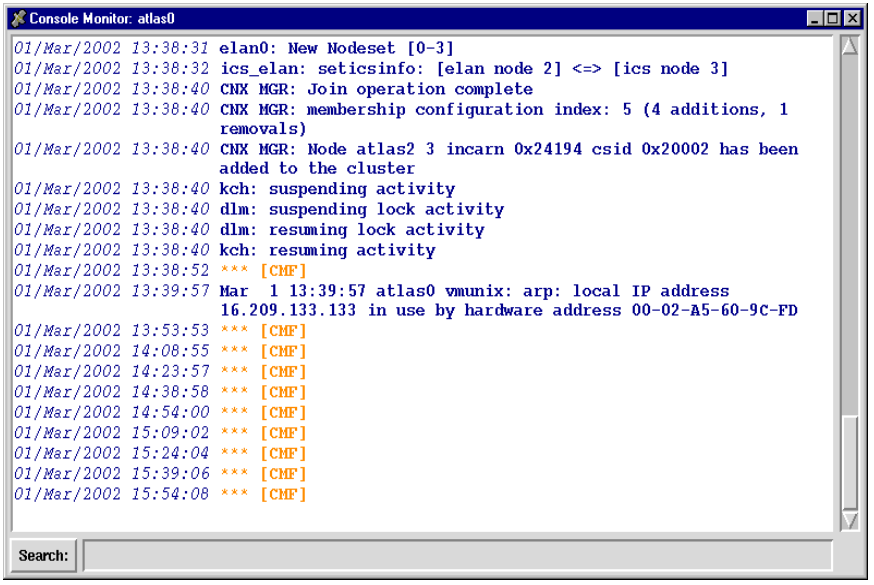

Figure 7–5 Console File Details

7.1.5.4 Filtering Views of Installation Progress

This section will describe the type of information displayed and how to change your view of installation progress.

Filtering Based On Status

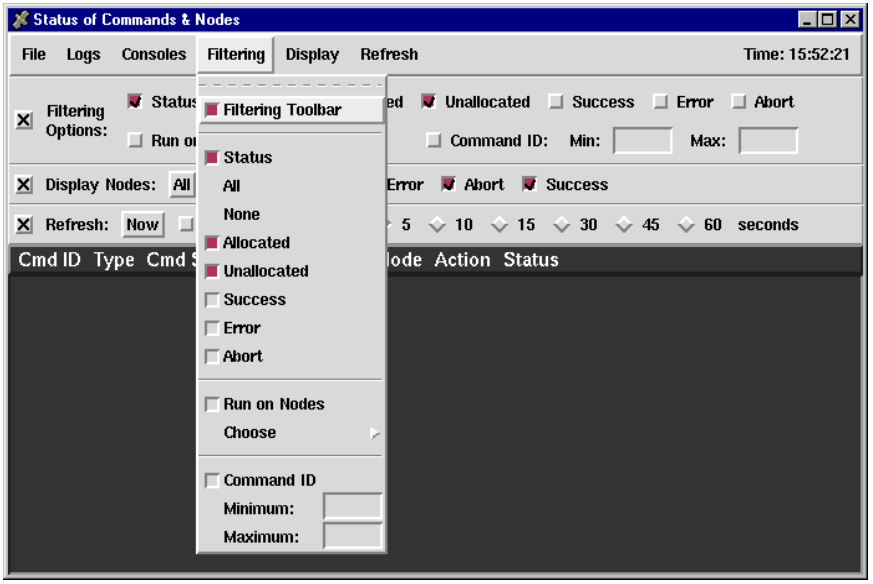

Figure 7–6 Filtering Options Based on Status

The following shows the detached external filtering toolbar.



Display Options

This section will describe how to change the type of information displayed.

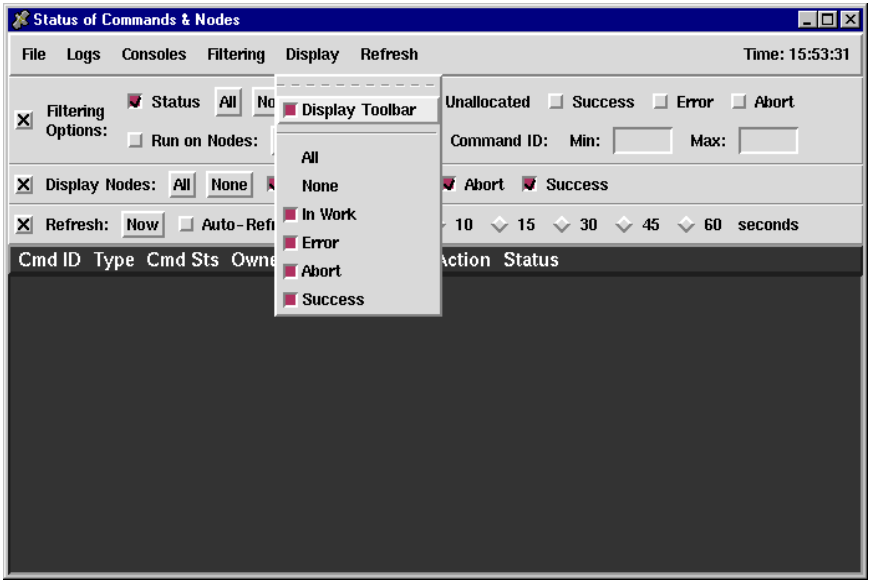

Figure 7–7 Display Options Based on Nodes

Refresh Options

This section describes the refresh options.

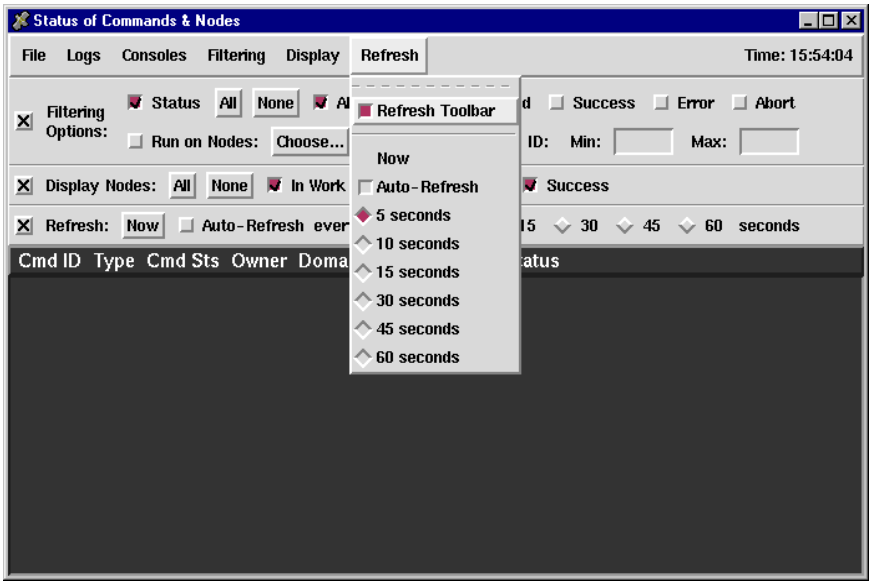

7.1.5.5 Text Based sramon Utility

The `sramon` utility can also be run from the command line. The following commands can be used:

```
atlasms# sramon cmd_id [-status]
```

For example:

```
atlasms# sramon 105
15:11:49  Command  105 (boot) atlasB: atlas[4-7] -- <Success>
15:11:49     Node                     atlas4     -- <Complete:wait> Finished
15:11:49     Node                     atlas5     -- <Complete:wait> Finished
15:11:49     Node                     atlas6     -- <Complete:wait> Finished
15:11:49     Node                     atlas7     -- <Complete:wait> Finished

Command has finished:

        Command  105 (boot) atlasB : atlas[4-7] -- <Success>

*** Node States *** Completed: atlas[4-7]

# sramon 105 -status
Success
```

7.2 Review the SC Database System Settings

When the `sra setup` command runs for the first time, the installation process gathers information about the system and stores this information in the SC database. The installation process uses this information when installing the other nodes, so you should review the SC database system settings to ensure that the values are set correctly.

To display the SC database system settings, use the `sra edit` command. The following example shows the SC database system settings for a 128-node system called `atlas`:

```
atlas0# sra edit
sra> sys
sys> show system
Id   Description                                          Value
-----------------------------------------------------------------
[0  ] System name                                         atlas
[1  ] SC database revision                                2.5.1
[2  ] Connect method                                      cmf
[3  ] First DECserver IP address                          site specific
[4  ] First port on the terminal server                   7
[5  ] Hardware type                                       ES45
[6  ] Default image                                       0
[7  ] Number of nodes                                     8
[8  ] Node running console logging daemon (cmfd)          atlasms
[9  ] cmf home directory                                  /var/sra/
[10 ] cmf port number                                     6500
[11 ] cmf port number increment                           2
[12 ] cmf max nodes per daemon                            256
[13 ] cmf max daemons per host                            4
[14 ] Allow cmf connections from this subnet              255.255.0.0
[15 ] cmf reconnect wait time (seconds)                   60
[16 ] cmf reconnect wait time (seconds) for failed ts     1800
[17 ] Software selection                                  1
[18 ] Software subsets
[19 ] Kernel selection                                    3
[20 ] Kernel components                                   2 3 4 11
[21 ] DNS Domain Name                                     site specific
[22 ] DNS server IP list                                  site specific
[23 ] DNS Domains Searched
[24 ] NIS server name list                                site specific
[25 ] NTP server name list                                site specific
[26 ] MAIL server name                                    site specific
[27 ] Default Internet route IP address                   site specific
[28 ] Management Server name                              atlasms
[29 ] Management Server IP address                        10.128.101.1
[30 ] Use swap, tmp & local on alternate boot disk        no
[31 ] SRA Daemon (srad) port number                       6600
[32 ] SRA Daemon Monitor host
[33 ] SRA Daemon Monitor port number
[34 ] SC Database setup and ready for use                 1
[35 ] IP address of First Top level switch (rail 0)       10.128.128.128
[36 ] IP address of First Node level switch (rail 0)      10.128.128.1
```

```
[37 ] IP address of First Top level switch (rail 1)        10.128.129.128
[38 ] IP address of First Node level switch (rail 1)       10.128.129.1
[39 ] Port used to connect to the scmountd on MS           5555
[40 ] /etc/clua_default metric                             2
[41 ] Preferred Server cluster alias base address          10.128.106.1

------------------------------------------------------------------
sys>
```

Note:

The UNIX disk is no longer displayed in the system output.

To change any of these settings, use the `sra edit` command, as shown in the following sections:

- Changing the Tru64 UNIX Disk
- Configuring the Cluster Disk
- Changing the External Network Netmask
- Changing the External IP Address on Additional Nodes

Changing the Tru64 UNIX Disk

The Tru64 UNIX disk is set to `dsk2` by default. If you wish to change this value, use the `sra edit` command as shown in the following example:

```
atlasms# sra edit
sra> sys
sys> show image
valid images are [unix-first cluster-first cluster-second boot-first boot-second
gen_boot-first]1
sys> edit image unix-first

Id   Description                                  Value
------------------------------------------------------------------

[0  ] Image Role                                   unix
[1  ] Image name                                   first
[2  ] UNIX device name                             dsk2
[3  ] SRM device name                              dkb200
[4  ] root partition size (%)                      15
[5  ] root partition                               a
[6  ] usr partition size (%)                       35
```

1. `unix-first` = Tru64 UNIX disk (no backup); `cluster-first` = cluster (`/`, `/usr`, `/var`) disk; `cluster-second` = backup cluster (`/`, `/usr`, `/var`) disk; `boot-first` = primary boot disk; `boot-second` = backup boot disk; `gen_boot-first` = generic boot disk (no backup).

```
[7  ] usr partition                          g
[8  ] var partition size (%)                 30
[9  ] var partition                          h
[10 ] swap partition size (%)                20
[11 ] swap partition                         b

----------------------------------------------------------------

Select attributes to edit, q to quit
eg. 1-5 10 15

probe = probe for value

edit? 2
UNIX device name                         [dsk2]
new value? dsk3

UNIX device name                         [dsk3]
Correct? [y|n] y
sys>
```

Note:

Do not spread the base operating system across more than one disk. Do not change the disk partition selection — use `b`, `g`, and `h` for swap, `/usr`, and `/var` respectively.

Configuring the Cluster Disk

The `sra setup` command gathers information on disk usage. You should review this information now, in particular the Disk Location Identifiers assigned to the cluster and generic boot disks. When using RAID, the UNIX device name assigned to each of the RAID disks is not guaranteed to be in ascending order. For example `dsk3` (assuming 3 local disks), typically associated with the cluster disk, will not necessarily be the RAID disk configured to be the cluster disk.

To map a UNIX device name to a RAID disk, use the RAID disk identification label assigned in Table 3–12.

For example, the cluster disk for `atlasD0`, `D1`, has an identification label 'IDENTIFIER=1' and the generic boot disk for `atlasD0`, `D1`, has an identification label 'IDENTIFIER=2'.

The Disk Location Identifiers in the SC database should be updated to reflect the identifiers used. Use the `sra edit` command to update the identifiers assigned to each cluster as follows:

```
atlasms# sra edit
sra> sys
sys> edit cluster atlasD0
```

```
Id   Description                                Value
-----------------------------------------------------------------
[0  ] Cluster name                              atlasD0
[1  ] Cluster alias IP address                  site-specific
[2  ] Domain Type                               fs
[3  ] First node in the cluster                 0
[4  ] I18n partition device name
[5  ] SRA Daemon Port Number                    6600
[6  ] File Serving Partition                    0
[7  ] Number of Cluster IC Rails                2
[8  ] Current Upgrade State                     Pre_Upgrade
[9  ] Desired Upgrade State                     Pre_Upgrade
[10 ] Image Role                                cluster
[11 ] Image name                                first
[12 ] UNIX device name                          dsk3
[13 ] SRM device name
[14 ] Disk Location (Identifier)                IDENTIFIER=5
[15 ] root partition size (%)                   5
[16 ] root partition                            b
[17 ] usr partition size (%)                    50
[18 ] usr partition                             g
[19 ] var partition size (%)                    45
[20 ] var partition                             h
[21 ] Image Role                                cluster
[22 ] Image name                                second
[23 ] UNIX device name                          dsk5
[24 ] SRM device name
[25 ] Disk Location (Identifier)                IDENTIFIER=3
[26 ] root partition size (%)                   5
[27 ] root partition                            b
[28 ] usr partition size (%)                    50
[29 ] usr partition                             g
[30 ] var partition size (%)                    45
[31 ] var partition                             h
[32 ] Image Role                                gen_boot
[33 ] Image name                                first
[34 ] UNIX device name                          dsk4
[35 ] SRM device name
[36 ] Disk Location (Identifier)                IDENTIFIER=6
[37 ] default or not
[38 ] swap partition size (%)                   30
[39 ] tmp partition size (%)                    35
[40 ] local partition size (%)                  35
[41 ] Image Role                                unix
[42 ] Image name                                first
[43 ] UNIX device name                          dsk2
[44 ] SRM device name
[45 ] Disk Location (Identifier)
[46 ] root partition size (%)                   10
[47 ] root partition                            a
[48 ] usr partition size (%)                    35
[49 ] usr partition                             g
[50 ] var partition size (%)                    35
```

```
[51 ] var partition                        h
[52 ] swap partition size (%)              20
[53 ] swap partition                       b
----------------------------------------------------------------

Select attributes to edit, q to quit
eg. 1-5 10 15
edit? 14 36

Disk Location (Identifier) [IDENTIFIER=5]
new value? IDENTIFIER=1
Disk Location (Identifier) [IDENTIFIER=6]
new value? IDENTIFIER=2

Disk Location (Identifier) [IDENTIFIER=1]
Disk Location (Identifier) [IDENTIFIER=2]
Correct? [y|n] y
sys>
```

When using `sra edit` for larger systems, it is recommended you take the following additional steps:

1. Create a file in the following format:
   `domain_name disk image identifier`

   where:

   `domain_name` - is the default cluster alias e.g. `atlasD0`

   `disk` - is typically either cluster or gen_boot

   `image` - is the image name: first or second

   `identifier` - is the disk label in the form IDENTIFIER=1

   The following is a sample file:

   ```
   atlasD0 cluster   first  IDENTIFIER=1
   atlasD0 gen_boot  first  IDENTIFIER=2
   atlasD1 cluster   first  IDENTIFIER=4
   atlasD1 gen_boot  first  IDENTIFIER=5
   atlasD2 cluster   first  IDENTIFIER=7
   atlasD2 gen_boot  first  IDENTIFIER=8
   atlasD3 cluster   first  IDENTIFIER=10
   atlasD3 gen_boot  first  IDENTIFIER=11
   ```

2. Using `sra edit` load this data into the SC database as follows (assuming the file created is `/var/sra/disk_id`):

   ```
   sra> sys
   sys> update
   update hosts
   update cmf
   update ris <nodes>
   update ds <nodes>
   update diskid <filename>
   sys> update diskid /var/sra/disk_id
   Disk Location Identifiers loaded successfully
   sys>
   ```

Changing the External Network Netmask

The netmask of an external network is set to 255.255.255.0 by default. If you wish to change this value, use the `sra edit` command as shown in the following example:

```
atlasms# sra edit
sra> sys
sys> show ip
valid ips are [man ext ics eip]1
sys> edit ip ext

Id   Description                                Value
-----------------------------------------------------------------

[0  ] Interface name                             ext
[1  ] Hostname suffix                            -ext1
[2  ] Network address (IP)
[3  ] UNIX device name                           ee1
[4  ] SRM device name                            eib0
[5  ] Netmask                                    255.255.255.0
[6  ] Cluster Alias Metric

-----------------------------------------------------------------


Select attributes to edit, q to quit
eg. 1-5 10 15

edit? 5
Netmask                                    [255.255.255.0]
new value? 255.255.0.0

Netmask                                    [255.255.0.0]
correct? [y|n] y
sys>
```

Each node's external network netmask will be affected by this change *via* the rule set.

Changing the External IP Address on Additional Nodes

The `sra install` command will automatically configure the external interfaces as required on additional nodes.

The address and UNIX device name (if different not using DE602) should be defined as follows for each node with an external interface.

If desired, the external interfaces can be configured.

---

1. `man` = management network; `ext` = external network; `ics` = cluster interconnect; `eip` = system interconnect

```
atlasms# sra edit
sra> node
node> edit atlas1


Id   Description                                Value
-----------------------------------------------------------------

[0  ] Hostname                                   atlas1
...etc...
[66 ] ip01:Hostname suffix                       atlas1-ext1           *
[67 ] ip01:Network address (IP)                                       #
[68 ] ip01:UNIX device name                      ee1
...etc...

-----------------------------------------------------------------

Select attributes to edit, q to quit
eg. 1-5 10 15

edit? 67 68

enter a new value, probe or auto
auto  = generate value from system
probe = probe hardware for value

ip01:Network address (IP)               []                  (no value)
new value? 16.209.133.226
ip01:UNIX device name                   [ee1]               (set)
new value? alt0

ip01:Network address (IP)               [16.209.133.226]    (new)
ip01:UNIX device name                   [alt0]              (new)
correct? [y|n] y
node>
```

For more information about the `sra` command, see Chapter 16 of the *HP AlphaServer SC System Administration Guide*.

Changing the Default Route

The `sra setup` command gathers the default route setting from the management server, or node0, and stores it in the SC database. The installation process uses this setting when configuring the first node of each domain. If you wish to change this value, use the `sra edit` command as follows:

```
atlasms# sra edit
sra> sys
sys> edit system
```

```
Id Description                                                  Value
----------------------------------------------------------------
[0 ] System name                                                atlas
.
.
[27 ] Default Internet route IP address                         site specific

----------------------------------------------------------------
.
.

Select attributes to edit, q to quit
eg. 1-5 10 15

edit? 27
Default Internet route IP address       [site specific]
new value? uu.xx.yy.zz

Default Internet route IP address       [uu.xx.yy.zz]
correct? [y|n] y
sys>
```

Changing the Node Type

The `sra setup` probe should determine any differences in hardware type. Please verify that the hardware type for the non-dominant type is correct by using the `sra edit` command as follows:

```
atlasms# sra edit
sra> node
node> edit 1

Id   Description                              Value
----------------------------------------------------------------
[0  ] Hostname                                atlas1
[1  ] DECserver name                          atlas-tc1
[2  ] DECserver internal port                 2
[3  ] cmf host for this node                  atlasms
[4  ] cmf port number for this node           6500
[5  ] TruCluster memberid                     2
[6  ] Cluster name                            atlas
[7  ] Hardware address (MAC)                  00-02-56-00-0C-99
[8  ] Number of votes                         0
[9  ] Node specific image_default             0                    *
[10 ] Elan Id                                                      #
[11 ] Bootable or not                         0
[12 ] Hardware type                           DS20L
[13 ] Current Installation State              Member_Added
[14 ] Desired Installation State              Member_Added
[15 ] Current Installation Action             Complete:wait
[16 ] Command Identifier                      21
[17 ] Node Status                             Finished
[19 ] im00:Image Role                         boot
```

```
[20 ] im00:Image name                          first
[21 ] im00:UNIX device name                    dsk2
[22 ] im00:SRM device name                     dqa0
[23 ] im00:Disk Location (Identifier)
[24 ] im00:default or not                      yes
[31 ] im00:swap partition size (%)             30
[33 ] im00:tmp partition size (%)              35
[35 ] im00:local partition size (%)            35
[38 ] ip03:Interface name                      eip
[39 ] ip03:Hostname suffix                     atlas1-eip0             *
[40 ] ip03:Network address (IP)                10.64.0.2           *
[41 ] ip03:UNIX device name                    eip0
[42 ] ip03:SRM device name
[43 ] ip03:Netmask                             255.255.0.0
[44 ] ip03:Cluster Alias Metric                16
[46 ] ip02:Interface name                      ics
[47 ] ip02:Hostname suffix                     atlas1-ics0             *
[48 ] ip02:Network address (IP)                10.0.0.2            *
[49 ] ip02:UNIX device name                    ics0
[50 ] ip02:SRM device name
[51 ] ip02:Netmask                             255.255.255.0
[52 ] ip02:Cluster Alias Metric
[54 ] ip01:Interface name                      ext
[55 ] ip01:Hostname suffix                     atlas1-ext1             *
[56 ] ip01:Network address (IP)                                      #
[57 ] ip01:UNIX device name                    ee0
[58 ] ip01:SRM device name                     eia0
[59 ] ip01:Netmask                             255.255.255.0
[60 ] ip01:Cluster Alias Metric
[62 ] ip00:Interface name                      man
[63 ] ip00:Hostname suffix                     atlas1                  *
[64 ] ip00:Network address (IP)                10.128.0.2          *
[65 ] ip00:UNIX device name                    ee1
[66 ] ip00:SRM device name                     eib0
[67 ] ip00:Netmask                             255.255.0.0
[68 ] ip00:Cluster Alias Metric

* = default generated from system
# = no default value exists
------------------------------------------------------------------
Select attributes to edit, q to quit
eg. 1-5 10 15

edit? 12

enter a new value, probe or auto
auto  = generate value from system
probe = probe hardware for value

Hardware type                          [DS20L]          (set)
new value? ES45

Hardware type                          [ES45]           (new)
```

```
correct? [y|n] y
node>
```

7.3 Add sysconfigtab Parameters

The Tru64 UNIX operating system includes various subsystems that are used to define or extend the kernel. Kernel variables control the behavior of these subsystems, or track subsystem statistics since boot time.

The recommended `sysconfigtab` parameters are provided in the file `/Examples/sysconfigtab` on the *HP AlphaServer SC System Software* CD-ROM. This sample `sysconfigtab` file assumes a memory size of 4GB.

You should review the recommended values and if necessary copy the file to a temporary location on your system, and modify the values. Note that the default value for the `shm_max` attribute is 4GB.

The recommended `sysconfigtab` parameters will be added automatically by `sra install` (see Section 7.4), where you will specify the temporary location for the modified file in the `sra install` command line.

7.4 Create the Domains

To create the domains, perform the following steps on the management server, if used, or on Node 0 (if not using a management server).

1. Insert the *HP AlphaServer SC System Software* CD-ROM in the disk drive.
2. If it is not already mounted, mount the CD-ROM (see Section 5.1.9, step 2 on page 5–32).
3. Unpack the latest Tru64 UNIX patch kit tar file in the `/patches` directory.

Note:

For HP AlphaServer SC Version 2.6, you should load Tru64 UNIX 5.1B PK3 *only*.

The operating system patch software kit (`T64V51BB24AS0003-20030929.tar`) is available from the following location:
`<http://www.itrc.hp.com/>`

or from your local HP support representative.

Note:

During the lifetime of this product release, the PK3 url above may become invalidated. If this happens, you should contact HP AlphaServer SC support.

4. Install, clusterize, and add members to each domain, as follows:
   ```
   atlasms# sra install -domains all -unixpatch /patches/patch_kit -sckit /
   cdrom/kits -sysconfig /cdrom/Examples/sysconfigtab
   ```
   where
   - `-domains all` specifies that the software should be installed on all of the domains.
   - `-unixpatch /patches/patch_kit` specifies the directory in which you had unpacked the Tru64 UNIX patch kit software (see step 3 above).
   - `-sckit /cdrom/kits` specifies the CD-ROM mount point created earlier (see step 2 above) containing the HP AlphaServer SC software.
   - `-sysconfig /cdrom/Examples/sysconfigtab` adds the specified `sysconfigtab` parameters to each node.

   Note:

   The `sra install` command installs all of the HP AlphaServer SC software on the specified nodes.

   When this command has successfully completed, the first node in each domain is booted off the cluster disk, and all the members have been added, booted, and shut-down to the SRM prompt.

   To display information on sra commands, use the following command:
   ```
   atlasms# sra command_info
   ```

When running the `sra install` command to customize an installation, note the following:

- The `sra install` command options `-domains` and `-nodes` can be abbreviated, as in the following examples:
  ```
  sra install -domains 0-2 -nodes 96-127
  sra install -do 0
  ```
- The `-nodes` option is not a qualifier for the `-domains` option.

  By specifying the command: `sra install -domains atlasD0,atlasD1 -nodes atlas96` you install all nodes in domains `atlasD0` and `atlasD1`, that is nodes `atlas0-63`, and also node `atlas96`.

However, by specifying the command: `sra install -domains atlasD0 -nodes atlas0`, you install all of `atlasD0`. In this example, the option `-nodes atlas0` is redundant, and the command does not install only `atlas0`.

- The `-member` option can be used as a qualifier for the `-domains` flag. By specifying the command: `sra install -domains atlasD0,atlasD1 -member 1,2` you only install `members 1,2` in domains `atlasD0` and `atlasD1` (that is nodes `atlas0`, `atlas1`, `atlas32` and `atlas33`).

  For more information on the `sra install` command, see Section 7.1.2 on page 7–2. For information on how to monitor the progress of the installation, see Section 7.1.5 on page 7–4.

7.5 Boot the System

After running the `sra install` command, the first member of each domain will be booted and all other members will be halted.

You can now boot the entire system with the following command:

```
atlasms# sra boot -domains all
```

Note

This command will ignore any nodes already booted.

7.6 Complete the Setup of the Domains

To complete the setup of the domains, perform the following steps:

1. Install the HP Fortran Run-Time Libraries on each domain. To do this, follow the instructions in Section 5.1.10 on each domain in the system.
2. Install any further layered products required on each domain.

8
Completing the Installation

When you have added all nodes to the HP AlphaServer SC system, perform the following tasks to complete the installation:

- Configure the External Network Interfaces (see Section 8.1 on page 8–2)
- Improve Cluster Availability (see Section 8.2 on page 8–3)
- Load File System Configuration Data in the SC Database (see Section 8.3 on page 8–7)
- Initial Setup of Monitoring for HSG80 RAID Systems (see Section 8.4 on page 8–7)
- Configure the RMS Database (see Section 8.5 on page 8–10)
- Provide RMS with CAA Failover Capability (see Section 8.6 on page 8–11)
- Enable CMF as a CAA Application (see Section 8.7 on page 8–15)
- Run the Example MPI Program (see Section 8.8 on page 8–16)
- Verify the HP AlphaServer SC Interconnect (see Section 8.9 on page 8–17)
- Configure LSM (see Section 8.10 on page 8–18)
- Verify Swap Mode (see Section 8.11 on page 8–18)
- Add a Second Rail to an HP AlphaServer SC System after Domain Creation (see Section 8.12 on page 8–18)

Note:

Use the checklist provided in Appendix A (if using a management server) or Appendix B (if not using a management server), to ensure that you complete all installation tasks in the correct order.

If adding a management server to an HP AlphaServer SC system after domain creation, use the checklist provided in Appendix C to ensure that you complete all installation tasks in the correct order.

8.1 Configure the External Network Interfaces

Note:

In Section 7.2, you will have defined those nodes with external IP addresses and the `sra install` command will have automatically configured these addresses during the installation process. However, if you have further changes to make, proceed with the instructions below.

Network interfaces on additional nodes can be used to move or share the routing load to cluster aliases within a domain. They can also be used to make a specific node a client of an external NFS file system. When such a node mounts the external file system, NFS traffic between the node and the external file server will be *via* the node's external interface. This is more efficient than routing through the primary nodes.

To configure the external network interfaces, perform the following tasks:

- Set Up NFS to Allow Mounts from External Machines (see Section 8.1.1 on page 8–2)

For more information about configuring network devices, see Chapter 22 of the *HP AlphaServer SC System Administration Guide*.

8.1.1 Set Up NFS to Allow Mounts from External Machines

The `vi` command hangs when trying to open existing files on a file system that is NFS-mounted from a machine that is not part of the cluster management network. The `vi` command hangs because it is attempting to obtain an exclusive lock on the file. The hang persists for many minutes; it may not be possible to use Ctrl/C to return to the command prompt.

The workaround is to ensure that the system that is NFS-serving the file system to a domain can resolve the internal domain member names (for example, `atlas0`) of the domain members that mount the NFS file system. The usual way of doing this is to use the internal domain member names as aliases for the address of the external interface on those nodes (for example, create an alias called `atlas0` for the `atlas0-ext1` external interface).

For example, domains atlasD0 and atlasD1 both NFS-mount the /data file system from the NFS server dataserv. The /data file system is being mounted by domain members atlas0 and atlas32. These nodes have external interfaces atlas0-ext1 and atlas32-ext1 respectively. To avoid the vi hang problem, ensure that dataserv can resolve atlas0 to atlas0-ext1 and atlas32 to atlas32-ext1.

This section describes three common ways of ensuring that the internal domain names can be resolved:

- /etc/hosts
  In the /etc/hosts file on dataserv, define atlas0 as an alias for atlas0-ext1.
  In the /etc/hosts file on dataserv, define atlas32 as an alias for atlas32-ext1.

  You must perform this action on every system that is NFS-serving file systems to a domain.
- NIS/YP
  If NIS/YP is in use, and is distributing a hosts table, put the alias definitions for atlas0 and atlas32 into this table.
- DNS
  If DNS is in use, and is distributing host address information, define atlas0 and atlas32 as aliases for their respective external interface entries.

Note:

If you choose either the NIS/YP option or the DNS option, ensure that svc.conf is configured so that hostname resolution checks locally (that is, /etc/hosts) before going to bind or yp. For more information, see the svc.conf(4) reference page.

8.2 Improve Cluster Availability

The availability of a cluster is determined by the following factors:

- Cluster quorum (see Section 8.2.1 on page 8–3)
- The number of voting nodes present — if necessary, you can add votes (see Section 8.2.2 on page 8–4)

8.2.1 Cluster Quorum

Cluster quorum is defined as follows:

```
Cluster Quorum = Round Down [(The number of votes + 2) / 2 ]
```

At this stage in the installation, each domain in the system has one voting node, the first node, giving it a quorum of 1:

```
Cluster Quorum = Round Down [(1 + 2) / 2 ] = Round Down [1.5] = 1
```

If this first node fails, there are no voting nodes present — the domain loses quorum and becomes unavailable.

Giving a vote to a second node would give a quorum of 2:

```
Cluster Quorum = Round Down [(2 + 2) / 2 ] = Round Down [2] = 2
```

To make the domain more available, we assign votes to Node 1 and Node 2 (in addition to the existing vote assigned to Node 0) to give a quorum of 2:

```
Cluster Quorum = Round Down [(3 + 2) / 2 ] = Round Down [2.5] = 2
```

Therefore, when any two of the first three nodes are running, the domain is available. Since Node 0 and Node 1 can each serve all of the system file store, the domain can tolerate the loss of either node.

Note:

Node 2 does not have to be connected to the system file store. We assign a vote to Node 2 simply to satisfy the quorum algorithm, to ensure that any two of the three nodes will suffice.

See Section 8.2.2 for more information on how to add votes to a node.

8.2.2 Add Votes

The first node of each cluster already has one vote. To improve cluster availability, add votes to the next two nodes of each cluster.

Ensure that all nodes of each cluster are booted, before adding more votes; this ensures that the configuration files of all nodes are updated appropriately.

Perform the following steps as the `root` user (where `atlas` is an example system name):

Note:

You must run the `clu_quorum` command (step 1) on the first node of the relevant cluster. The `sra` commands (step 2) may be run on the management server or on the first node of the cluster.

1. Add one vote to the next two nodes of each cluster, as follows:

   On Node 0:
   ```
   atlas0# clu_quorum -m atlas1 1
   atlas0# clu_quorum -m atlas2 1
   ```
   On Node 32:
   ```
   atlas32# clu_quorum -m atlas33 1
   atlas32# clu_quorum -m atlas34 1
   ```

On Node 64:
```
atlas64# clu_quorum -m atlas66 1
atlas64# clu_quorum -m atlas65 1
```
.
.
.
On Node 992:
```
atlas992# clu_quorum -m atlas993 1
atlas992# clu_quorum -m atlas994 1
```

2. Activate the additional votes by shutting down and booting the updated nodes, as follows:

   a. Shut down the nodes:
```
atlas0# sra shutdown -nodes 'atlas[1-2]'
atlas32# sra shutdown -nodes 'atlas[33-34]'
atlas64# sra shutdown -nodes 'atlas[65-66]'
.
.
.
atlas992# sra shutdown -nodes 'atlas[993-994]'
```

   b. When the shutdown is complete, boot the nodes:
```
atlas0# sra boot -nodes 'atlas[1-2]'
atlas32# sra boot -nodes 'atlas[33-34]'
atlas64# sra boot -nodes 'atlas[65-66]'
.
.
.
atlas992# sra boot -nodes 'atlas[993-994]'
```

When the nodes have booted, each cluster will have three voting members and a quorum of 2. It will be resilient to the loss of any one of the first three nodes.

To view the quorum status, run the `clu_quorum` command with no arguments, as shown in the following example:
```
# clu_quorum
```

Note:

After updating the quorum configuration of the cluster, you must update the SC Database to reflect the votes of each member. Use the `sra edit` command to change the Number of Votes for the nodes you have configured.

See Appendix E for sample output from the `clu_quorum` command.

8.2.3 Side Effects of Using Quorum

As already demonstrated, quorum provides increased resilience and availability. However, there are a number of quorum-related side effects that you should be aware of, especially if you have been using a system with a quorum value of 1.

8.2.3.1 Shutting Down a Domain

On a system, regardless of the number of votes or nodes in the domain, use the following command to shut down the domain:

```
atlasms# sra shutdown -domains all
```

Note:

The shutdown command can be issued from the management server, or from another domain.

If you shut down the first domain on a system that does not have a management server, the shutdown will perform successfully. When you subsequently boot the domain, the shutdown command will not be listed as having completed because the shutdown could not be monitored by the system.

The `sra shutdown` command determines the best action to take to shutdown your system by running either of the following commands:

```
atlasms# sra shutdown -nodes 'atlas[0-31]'
atlasms# sra shutdown -domains atlasD0
```

Therefore, if sra detects that an entire domain is to be shutdown, sra will run the `shutdown -ch` command on the relevant domain.

Note:

When shutting down just some nodes in a domain, sra detects if the shutdown command will cause a loss of quorum. If this is the case, sra will cancel the shutdown command, unless the `-force` flag is specified.

8.2.3.2 Booting a System

To boot an entire system, you must have access to the console network *via* the console manager.

For systems that are configured with a management server, you can use the `sra boot` command from the management server to boot the domains. To achieve the fastest boot time for the 1024-node example system documented in this guide, boot all domains in parallel, by running the following command on the management server:

```
atlasms# sra boot -domains all
```

For systems without a management server, the console manager runs on the first domain. The console manager will not start until the first domain is established. This requires the presence of at least two of the first three nodes. Boot the first two nodes — in parallel — by entering the following command on the graphics console on Node 0 and on Node 1:

```
P00>>> boot boot_device
```

Note:

If you do not boot Node 0 and Node 1 in parallel, both nodes will hang until they reach a common point in the boot process and attain quorum.

Once these nodes have booted, you can use the `sra boot` command to boot the remaining nodes. As each domain can boot in parallel, you can reduce the boot time by running the following command:

```
atlas0# sra boot -domains all
```

Attaining quorum during boot is not an issue for the remaining domains as the `sra boot` command will, by default, boot four nodes at a time.

8.3 Load File System Configuration Data in the SC Database

The `scfsmgr` *Sysman* menu needs information about the configuration and usage of all disks on all File Serving (FS) Domains. You load this data into the database using the `scfsmgr` scan command as follows:

```
# scfsmgr scan
```

On a large system, this command can take a long time to complete.

If all nodes on the FS Domain(s) are not running when you use `scfsmgr scan`, you should rerun `scfsmgr scan` when those nodes are next booted.

8.4 Initial Setup of Monitoring for HSG80 RAID Systems

The HSG80 devices are not automatically added as monitored device by the install process (`sra setup`). In a large system, it is possible to have hundreds of HSG80 devices, and adding these as monitored devices manually can be time consuming.

To set the initial distribution of HSG80 RAID systems, use the `scmonmgr detect` command. This command runs the detect process on each node from the domain, or on the management server on which it is run. To detect all HSG devices installed in a system, run the command on each management server and each domain.

The syntax of the command is as follows:

```
scmonmgr detect -c class [-d <0|1>]
```

Where:

`-c` *`class`* – the class of the devices that must be detected.

Note:

In the current release, only the HSG class is supported.

`-d <0|1>` - an optional parameter which sets the debugging mode OFF/ON. If the parameter is not specified, the default value is OFF. When the debugging mode is ON (`-d 1`) the detect process displays additional information for each phase. This mode is used for diagnosis and testing purposes.

If the debug is turned off, the command displays only the new detected devices and errors. The new detected devices are printed in the following form:
`node_name: found hsgX (scpX) on node_name`

and the errors are printed with the node name followed by the error explanation:
`node_name: [error explanation]`

Some Examples:

1. To run the command on all domains with debug option disabled (and so ensure that all the detected HSG devices are added in the database as monitored objects), do the following:
   ```
   atlasms# scrun -d all '/usr/bin/scmonmgr detect -c hsg'
   ```
2. To detect the HSG devices on a management server with the debug disabled, do the following:
   ```
   atlasms# scmonmgr detect -c hsg
   This system is not configured in a cluster.
   The detect process will be run only on atlasms.
   Detect process finished.
   atlasms#
   ```
3. To detect the HSG devices on a management server with the debug enabled, do the following:
   ```
   atlasms# scmonmgr detect -c hsg -d 1
   This system is not configured in a cluster.
   The detect process will be run only on atlasms.
   INFO   : Starting the HSG detect process on 'atlasms'.
   INFO   : There are no HSG devices attached to this node.
   INFO   : Exit
   Detect process finished.
   atlasms#
   ```
4. To detect the HSG devices on a certain domain (for example, `atlasD0`) it is necessary to run the command on a node from this domain. This will detect all HSG80 devices attached to the domain nodes, as follows:
   ```
   atlas0# scmonmgr detect -c hsg
   Starting HSG detect process for cluster atlasD0
   atlas0: found hsg1 (scp0) on atlas0
   atlas1: found hsg2 (scp0) on atlas1
   ```

```
atlas4: error in the detect process
Detect process finished on cluster atlasD0
atlas0#
```

5. To detect the HSG devices on a certain domain, with only 2 nodes in domain `atlasD0` and with debugging enabled, do the following:

```
atlas# scmonmgr detect -c hsg -d 1
Starting HSG detect process for cluster atlasD0
INFO   : Number of nodes in cluster: 2
INFO   : Detecting HSG devices on atlas0
atlas0 : INFO : Starting the HSG detect process on 'atlas0'.
atlas0 : INFO : Found HSG device scp0 using bus 1 targ 0 lun 0
atlas0 : INFO   : Successfully logged into the controller scp0 at bus 1
targ 0 lun 0
atlas0 : INFO  : Sending 'show this' command for scp0 at bus 1 targ 0 lun 0
atlas0 : INFO  : WWID for scp0 at bus 1 targ 0 lun 0 is 5000-1FE1-0009-5180
atlas0 : INFO : New HSG name = hsg47 for scp0 (wwid=5000-1FE1-0009-5180)
atlas0: INFO : Sending 'quit' for scp0 at bus 1 targ 0 lun 0
atlas0 : INFO   : port_wwid=5000-1FE1-0009-5183 and serial=ZG03200669 is
Controller A for hsg47.
atlas0: INFO   : Controller A for hsg47 added into database.
atlas0: INFO   : port_wwid=5000-1FE1-0009-5181 and serial=ZG03200650 is
Controller B for hsg47.
atlas0: INFO   : Controller B for hsg47 added into database.
atlas0: INFO   : Adding hsg47 (wwid=5000-1FE1-0009-5180) as a monitored
device
atlas0: found hsg47 (scp0) on atlas0
atlas0: INFO   : Detect process finished.
atlas0: INFO   : Exit
INFO   : Detecting HSG devices on atlas1
atlas1: INFO   : Starting the HSG detect process on 'atlas1'.
atlas1: INFO   : Found HSG device scp0 using bus 1 targ 0 lun 0
atlas1: INFO   : Successfully logged into the controller scp0 at bus 1
targ 0 lun 0
atlas1: INFO  : Sending 'show this' command for scp0 at bus 1 targ 0 lun 0
atlas1: INFO  : WWID for scp0 at bus 1 targ 0 lun 0 is 5000-1FE1-0009-5180
atlas1: INFO  : Device 'scp0' with WWID=5000-1FE1-0009-5180 exists in the
database.
atlas1: INFO   : Detect process finished.
atlas1: INFO   : Exit
Detect process finished on cluster atlasD0
atlas0#
```

Note:

An HSG80 device can be monitored only from a node that is directly attached to it. The detect process sets this correctly. It is not recommended to set the monitoring to another node. If you want to do this, be sure that the HSG80 device is attached to the node (monitoring server) which you specify as the server in the `scmonmgr move` command.

8.5 Configure the RMS Database

To configure the RMS database, you use `sra setup` command to perform a number of automatic steps. You can configure the RMS database in the following ways:

- Set Up RMS Partitions (see Section 8.5.1 on page 8–10)
- Customize RMS Partitions (see Section 8.5.2 on page 8–11)

8.5.1 Set Up RMS Partitions

Partitions are used to organize nodes in the HP AlphaServer SC system into groups for organizational, management, and policy reasons. The nodes in the system can be organized into named partitions. The `rcontrol` command is used to define partitions. The `prun` and `allocate` commands use the interface to the RMS system to execute programs. The `prun` and `allocate` commands allocate resources from a named partition.

Log on to the `rmshost` node (management server) as the `root` user.

The following example shows how to organize the 1024-node `atlas` system into three partitions.

Note:

Partitions are site-dependent; the partitions created below are examples only. A node cannot be in more than one partition at a time.

1. Create each partition using the `rcontrol` command, as follows:
```
atlasms# rcontrol create partition=fileserv configuration=day nodes='atlas0'
atlasms# rcontrol create partition=interactive configuration=day nodes='atlas[1,2]'
atlasms# rcontrol create partition=parallel configuration=day nodes='atlas[3-1023]'
```
2. Start each partition using the `rcontrol` command, as follows:
```
atlasms# rcontrol start partition=fileserv
atlasms# rcontrol start partition=interactive
atlasms# rcontrol start partition=parallel
```

3. Run the `rinfo` command to check the status of the partitions, as follows:
   ```
   atlasms# rinfo
   ```
   The output should be similar to the following:
   ```
   PARTITION       CPUS       STATUS      TIME      TIMELIMIT     NODES
   root            4096                                         atlas[0-1023]
   fileserv        0/4                                          atlas0
   interactive     0/8                                          atlas[1-2]
   parallel        0/4084                                       atlas[3-1023]
   ```

8.5.2 Customize RMS Partitions

To change a partition, you must first stop the partition, delete it, create it again, and then start it. For example, the following commands will change the size of the `interactive` and `parallel` partitions:

1. Make sure that no jobs are running on the partitions (use the `rinfo` command).
2. Stop the partitions as follows:
   ```
   atlasms# rcontrol stop partition=interactive
   atlasms# rcontrol stop partition=parallel
   ```
3. Delete the partitions, as follows:
   ```
   atlasms# rcontrol remove partition=interactive configuration=day
   atlasms# rcontrol remove partition=parallel configuration=day
   ```
4. Recreate and restart the partitions, as follows:
   ```
   atlasms# rcontrol create partition=interactive configuration=day nodes='atlas[1-3]'
   atlasms# rcontrol create partition=parallel configuration=day nodes='atlas[4-1023]'
   atlasms# rcontrol start partition=interactive
   atlasms# rcontrol start partition=parallel
   ```

Note:

All nodes are always in the `root` partition. You must not attempt to change the `root` partition in any way. You must not use the `root` partition in the `prun` command. If you wish to run a job on all nodes, create a single partition containing all nodes.

For more information about setting up RMS partitions, see Chapter 5 of the *HP AlphaServer SC System Administration Guide*.

8.6 Provide RMS with CAA Failover Capability

At this point in the installation, RMS can operate correctly. However, if the host defined as `rmshost` (see Section 5.2 on page 5–36, or Section 6.2 on page 6–24) fails, RMS services become unavailable. This section describes how to use CAA to allow the `rmshost` functions to fail over to another node.

Provide RMS with CAA Failover Capability

To make RMS a CAA failover application, perform the following steps on the first domain (where `atlas` is an example system name, and `atlas0` is the current `rmshost`):

Note:

The following CAA steps for RMS and MSQL only apply in cases where there is no management server, or where the system has a clustered management server.

1. Stop the RMS daemon, as follows:
   ```
   atlas0# rmsctl stop
   ```
2. Stop the `mSQL` daemon, as follows:
   ```
   atlas0# /sbin/init.d/msqld stop
   ```
3. Create two CAA application resource profiles for RMS, as follows:
   ```
   # caa_profile -create SC05msql -t application -a msql.scr -p restricted
   -h 'atlas0 atlas1' -o as=1,ci=300,st=500
   # caa_profile -create SC20rms -t application -a rms.scr -p restricted -h
   'atlas0 atlas1' -o as=1,ci=300,st=500
   ```
   If you receive a warning that the profiles already exist and that creation is cancelled, then you should update the existing profiles, as follows:
   ```
   # caa_profile -update SC05msql -t application -a msql.scr -p restricted
   -h 'atlas0 atlas1' -o as=1,ci=300,st=500
   # caa_profile -update SC20rms -t application -a rms.scr -p restricted -h
   'atlas0 atlas1' -o as=1,ci=300,st=500
   ```

   Note:

   The `caa_profile` commands create or update the resource profiles `SC05msql` and `SC20rms`: defining the resources, their dependencies, and how the resources are managed by CAA. The commands also create a restricted placement policy - the application can run on `atlas0` or `atlas1` only, where `atlas0` and `atlas1` are two of the nodes that will provide RMS services.

4. Register the `SC05msql` and `SC20rms` resource profiles with CAA as follows:
   ```
   # /usr/sbin/caa_register SC05msql
   # /usr/sbin/caa_register SC20rms
   ```
   This allows CAA to monitor and manage the resources.

   Note:

   If the profiles have been deleted (using the `caa_profile -delete` command), the associated scripts will also have been deleted, causing the following messages to appear:
   ```
   # /usr/sbin/caa_register SC05msql
   Action Script `/var/cluster/caa/script/msql.scr` does not exist!
   Could not register resource msql.
   # /usr/sbin/caa_register SC20rms
   ```

```
Action Script `/var/cluster/caa/script/rms.scr` does not exist!
Could not register resource rms.
```

If these messages appear, copy the standard profile scripts to the appropriate directory, as follows:

```
# cp /usr/opt/rms/examples/scripts/msql.scr /var/cluster/caa/script
# cp /usr/opt/rms/examples/scripts/rms.scr /var/cluster/caa/script
```

and re-run the `caa_register` commands.

---

5. Edit the `/etc/hosts` file — on each domain and on the management server (if used) — so that `rmshost` is a host alias of the default cluster alias of the first domain (for example, `atlasD0`), as follows:

   Before:

   ```
   atlasD0
   atlas0          rmshost
   ```

   After:

   ```
   atlasD0         rmshost
   atlas0
   ```

6. Start RMS as a CAA application, as follows:

   ```
   # /usr/sbin/caa_start SC05msql
   # /usr/sbin/caa_start SC20rms
   ```

   The `caa_start SC05msql` and `caa_start SC20rms` commands will be performed by CAA on subsequent reboots.

   Note:

   The RMS startup script can recognize whether it is being run on a domain, and whether RMS is registered as a CAA application.

   ---

7. At this stage, MSQL and the RMS servers are running on one node only (typically `atlas0`). You can start RMS on the remaining nodes as follows:

   ```
   atlas0# rmsctl start
   ```

   Because RMS servers are already running on a node (typically `atlas0`), `rmsctl` will report the RMS is already running on that node. You can ignore this message.

   RMS is now up and running as a failover application.

The `caa_start SC05msql` command starts the `mSQL` daemon on one of the nodes specified by the `SC05msql` application profile. The profile was created in step 3 above. In this example, it is running on either `atlas0` or `atlas1`. Once you have registered `SC05msql` as a CAA application, the `/sbin/init.d/msqld` script no longer starts or stops the `mSQL` daemon; instead, you must use the `caa_start` or `caa_stop` commands. If you manually kill the `mSQL` daemon, without first using `caa_stop`, the CAA system will automatically restart the daemon after a short interval.

To see which node should be running the mSQL daemon, use the caa_stat SC05msql command.

The caa_start SC20rms command starts RMS servers on one of the nodes specified by the SC10rms application profile. The profile was created in step 3 above. As CAA is starting RMS servers on the node, the rmshost attribute is set to the name of that node. To see which node should be running the SC20rms service, use the caa_stat SC20rms command. While the SC20rms service is running, the rmshost attribute and caa_stat should agree (for example, if the SC20rms application is running on atlas1, the rmshost attribute should have a value of atlas1). You can see the value of the rmshost attribute as follows:

```
# rmsquery "select val from attributes where name='rmshost' "
```

If you stop RMS on the node currently running the rms CAA application, using either rmsctl stop or /sbin/init.d/rms stop, the CAA application will automatically restart it after a short interval. To stop RMS, you must run the following commands in the specified sequence:

```
# caa_stop SC20rms
# rmsctl
```

If you have stopped RMS and then use rmsctl to start RMS, the RMS system will start and appear to operate correctly. The last value in the rmshost attribute will determine which node runs the RMS servers. However, should that node fail, CAA will not start RMS on the backup node. This is because RMS is in the stopped state. If you inadvertently use rmsctl start while the rms CAA state is stopped, you may safely use caa_start SC20rms to enable failover. There will be a brief interruption in RMS availability because the RMS servers are stopped and then restarted.

Once you have started the SC05msql and SC20rms applications using caa_start, the CAA system will automatically relocate the applications to another node if the original node fails. However, you can manually initiate this using the caa_relocate command. This can be useful if you plan to shut down the node. It is possible to independently relocate either the SC05msql or SC20rms application, as it is not mandatory that these both run on the same node.

During the relocation process, there will be a brief interruption of service. This is similar to the interruption that occurs when a node failure causes the relocation. During the period of relocation, RMS commands will report messages such as the following:

```
rinfo: Warning: Can't connect to MSQL server on rmshost: retrying ...
rcontrol: Warning: RMS server pmanager-parallel (rmshost) not responding
```

The CAA commands (caa_start, and so on) can be executed on any node in the domain running the application.

See Chapter 5 of the *HP AlphaServer SC System Administration Guide* for more information about RMS (and CAA failover).

8.7 Enable CMF as a CAA Application

On a system with no management server, or where using a clustered management server, the Console Logging Service should be provided with failover capability.

In the following, CMFHOST refers to the host running the `cmf` daemon(s) [`cmfd`], that is, `atlas0` (where there is no management server) or `atlasms[0|1]` (where there is a clustered management server).

After CMF is CAA enabled, CMFHOST will be a cluster alias: `atlasD0` (where there is no management server) or `atlasms` (where there is a clustered management server).

To enable CMF as a CAA application, perform the following steps:

1. Stop the console logging daemons by running the following command on CMFHOST:
   ```
   # /sbin/init.d/cmf stop
   ```
2. Use the `sra edit` command to set the CMF host in the SC database to be the cluster alias name of the domain hosting the CMF service, as follows:
   ```
   # sra edit
   sra> sys
   sys> edit system
   Id      Description                                                Value
   ------------------------------------------------------------------------
   .
   .
   .
   [8  ]   Node running console logging daemon (cmfd)           atlas0
   .
   .
   .
   Select attributes to edit, q to quit
   eg. 1-5 10 15

   edit? 8
   Node running console logging daemon (cmfd)           [atlas0]
   new value? atlasD0

   Node running console logging daemon (cmfd)           [atlasD0]
   correct? [y|n] y
   ```

   The `sra edit` command then asks if you would like to modify the SC database, as follows:
   ```
   Modify SC database only (1), update daemons (2), restart daemons (3) [3]:
   ```

   Enter 1 to modify the SC database only.
3. Check the CMF CAA profile, as follows:
   ```
   atlas0# caa_stat -p SC10cmf
   NAME=SC10cmf
   TYPE=application
   ACTION_SCRIPT=cmf.scr
   ACTIVE_PLACEMENT=0
   AUTO_START=1
   ```

```
CHECK_INTERVAL=60
DESCRIPTION=AlphaServer SC Console Management Facility
FAILOVER_DELAY=10
FAILURE_INTERVAL=0
FAILURE_THRESHOLD=0
HOSTING_MEMBERS=
OPTIONAL_RESOURCES=
PLACEMENT=balanced
REQUIRED_RESOURCES=
RESTART_ATTEMPTS=1
SCRIPT_TIMEOUT=300
```

When CMFHOST is the first domain (that is, when the HP AlphaServer SC system does not have a management server), the `HOSTING_MEMBERS` field should contain the hostnames of the first two nodes, and the `PLACEMENT` field should contain the text `restricted`, as shown in the following example:

```
HOSTING_MEMBERS=atlas0 atlas1
PLACEMENT=restricted
```

When CAA-enabled, the `cmfd` daemon will run on any node in the cluster (CMFHOST is the default cluster alias). However, it is preferable to use nodes that have a network interface on the subnet on which the cluster alias is defined — that is, the first two nodes in the default configuration — to avoid an extra routing hop.

If the output of the `caa_stat -p SC10cmf` command does not reflect the values specified above for the `HOSTING_MEMBERS` and the `PLACEMENT` fields, use a text editor to make the necessary changes to the `/var/cluster/caa/profile/SC10cmf.cap` file. Alternatively, use the `caa_profile` command to make these changes. For more information, see the *TruCluster Server Cluster Highly Available Applications* manual.

If CMFHOST is a clustered management server, the default values should be used for these fields, as follows:

```
HOSTING_MEMBERS=
PLACEMENT=balanced
```

4. On the new CMFHOST (`atlasD0`), register CMF as a CAA application, as follows:
   `# caa_register SC10cmf`
5. On the new CMFHOST (`atlasD0`), start the CAA service, as follows:
   `# caa_start SC10cmf`

8.8 Run the Example MPI Program

When you have set up the RMS partitions as described in Section 8.5.1 on page 8–10, you can run the example MPI program provided on the *HP AlphaServer SC System Software* CD-ROM.

The installation process copies the example MPI program and associated README file into the `/usr/opt/mpi/examples/sra/mpi` directory. To run the example program, copy the contents into your own directory. The associated README file provides instructions on how to compile and run the program.

8.9 Verify the HP AlphaServer SC Interconnect

In Chapter 5 and Chapter 6, you will have completed various diagnostic tests while building the system. At this stage, you should complete the range of diagnostic tests that are available.

The diagnostic tests are documented in the *HP AlphaServer SC Interconnect Installation and Diagnostics Manual*. This section contains a number of references to the relevant sections of that guide. Please be careful not to miss any steps as you refer to the sections. It is advisable to complete all the diagnostic steps suggested below.

- Run a simple boot-time check (see Section 7.4.8 of the *HP AlphaServer SC Interconnect Installation and Diagnostics Manual*)
- Use `elan_level_test` to check all node cables (see Section 7.4.9 of the *HP AlphaServer SC Interconnect Installation and Diagnostics Manual*)
- Use `cabletest` to check all uplinks (see Section 7.4.10 of the *HP AlphaServer SC Interconnect Installation and Diagnostics Manual*)
- Use `elan_level_test` to check each node-level switch (see Section 7.4.11 of the *HP AlphaServer SC Interconnect Installation and Diagnostics Manual*)
- Use `elan_level_test` to check all uplinks (see Section 7.4.12 of the *HP AlphaServer SC Interconnect Installation and Diagnostics Manual*)
- Use `elan_level_test` to check each top-level switch (see Section 7.4.13 of the *HP AlphaServer SC Interconnect Installation and Diagnostics Manual*)
- Use `elansoaktest` to test the entire HP AlphaServer SC Interconnect (see Section 7.4.14 of the *HP AlphaServer SC Interconnect Installation and Diagnostics Manual*)
- Use `neterror` to identify any faulty components (see Section 7.4.15 of the *HP AlphaServer SC Interconnect Installation and Diagnostics Manual*)

Once all tests are complete, you should prepare a maintenance schedule where you will elect to run at least `elan_level_test` and `neterror` at intervals - perhaps weekly. You should also monitor the events table with `sc_event` to identify any potential errors with the interconnect hardware (See Chapter 9 of the *HP AlphaServer SC System Administration Guide* for information on Managing Events).

8.10 Configure LSM

If you wish to configure LSM, do so after all nodes have been added to the domain. For more information about LSM, see Chapter 25 of the *HP AlphaServer SC System Administration Guide*.

8.11 Verify Swap Mode

The HP AlphaServer SC installation procedure configures all nodes with "eager" swap mode. Do not switch to "lazy" swap mode.

Note:

Lazy swap is not supported in HP AlphaServer SC Version 2.6 — use eager swap only.

8.12 Add a Second Rail to an HP AlphaServer SC System after Domain Creation

If you add a second rail to an HP AlphaServer SC system after domain creation, you must perform some additional steps.

Note:

The second rail should be populated before proceeding with the following steps.

The steps are different depending on the type of node used, as follows:

- HP AlphaServer SC System Composed of HP AlphaServer ES40 Nodes (page 8-19)
- HP AlphaServer SC System Composed of HP AlphaServer ES45 Nodes (page 8-20)

Note:

The information in this section is not applicable to HP AlphaServer DS20L systems.

8.12.1 HP AlphaServer SC System Composed of HP AlphaServer ES40 Nodes

This section applies only to an HP AlphaServer SC system composed of HP AlphaServer ES40 nodes. The additional steps are necessary because of the order in which the PCI buses are probed on an HP AlphaServer ES40. The name assigned to each rail (`elan0` or `elan1`) is related to the probe order, and whether one or two rails were present when the system was initially installed.

To ensure that the rails are consistently named, perform the following steps:

1. Ensure that all nodes are up.
2. Run the following command:
   ```
   # sra command -nodes all -command '/usr/sra/bin/sra_multirail -move'
   ```
3. Shut down the entire system.
4. Boot the system.
5. Use the sra edit command to set the rail count for each domain, as follows:
   ```
   # sra edit
   sra> sys
   sys> edit cluster atlasD0
   Id Description Value
   ----------------------------------------------------------------
   [0 ] Cluster name atlasD0
   [1 ] Cluster alias IP address www.xxx.yyy.zzz
   [2 ] Cluster domain type fs
   [3 ] First node in the cluster 0
   [4 ] Primary partition list {root dsk3b 5} {usr dsk3g 50}
   {var dsk3h 45}
   [5 ] Backup partition list {root dsk5b 5} {usr dsk5g 50}
   {var dsk5h 45}
   [6 ] I18n partition device name
   [7 ] Number of Cluster Interconnect Rails 1
   ----------------------------------------------------------------
   Select attributes to edit, q to quit

   eg.1-5 10 15
   edit? 7
   Number of Cluster Interconnect Rails [1]
   new value? 2
   Number of Cluster Interconnect Rails [2]
   Correct? [y|n] y
   sys>
   ```
6. Repeat step 5 for each domain in the system.

8.12.2 HP AlphaServer SC System Composed of HP AlphaServer ES45 Nodes

This section applies only to an HP AlphaServer SC system composed of HP AlphaServer ES45 nodes. To add a second rail after domain creation, use the `sra edit` command to set the rail count for each domain, as follows:

```
# sra edit
sra> sys
sys> edit cluster atlasD0
Id      DescriptionValue
------------------------------------------------------------------
.
.
.
[7  ]   Number of Cluster IC Rails1
.
.
.
------------------------------------------------------------------
Select attributes to edit, q to quit
eg. 1-5 10 15
edit? 7
Number of Cluster IC Rails     [1]
new value? 2
Number of Cluster IC Rails     [2]
Correct? [y|n] y
sys>
```

9

Installing LSF for HP AlphaServer SC

This chapter describes how to install Platform Computing Corporation's LSF® software ("LSF") on an HP AlphaServer SC system. The chapter presents the following topics:

- LSF Overview (see Section 9.1 on page 9–2)
- Installing a New LSF for HP AlphaServer SC (see Section 9.2 on page 9–3)
- Upgrading from LSF for HP AlphaServer SC Version 2.5 (see Section 9.3 on page 9–9)
- Configuring LSF for HP AlphaServer SC and Starting the LSF (see Section 9.4 on page 9–13)

9.1 LSF Overview

LSF for HP AlphaServer SC combines the strengths of LSF and HP AlphaServer SC software to provide a comprehensive Distributed Resource Management (DRM) solution.

LSF acts primarily as the workload scheduler, providing policy and topology-based scheduling. RMS acts as a parallel subsystem, and other HP AlphaServer SC software provides enhanced fault tolerance.

Nodes within HP AlphaServer SC systems are arranged into domains. LSF can be configured to treat each domain as a single virtual server host. Each virtual host has the same name as the domain.

For example, if two domains containing 64 HP AlphaServer ES45 systems are configured to appear as two 128 CPU virtual LSF server hosts, LSF policies are applied to the virtual hosts as if they were real hosts.

9.1.1 Preparing for LSF Installation

Before you install the LSF software, please note the following points:

- A domain should be configured as a single virtual host or a set of real hosts.
- Platform LSF for HP AlphaServer SC Version 2.5 and Version 2.6 hosts cannot co-exist in the same cluster. You must upgrade all Platform LSF for HP AlphaServer SC hosts to Version 2.6.
- The LSF log directory `LSF_LOGDIR` in `lsf.conf` must be a local directory. Do not use an NFS-mounted directory as `LSF_LOGDIR`. The `LSF_LOGDIR` should be set to `/var/lsf_logs`. This mount point (`/var`) is on the domain (not on NFS) and it is shared among cluster members. To set this during the installation procedure, add the following line to the end of the `install.config file`:
  `LSF_LOGDIR="/var/lsf_logs"`
- LSF requires an administrative user. This must not be the root user. Frequently, the username is `lsfadmin`. However, any non-root user name can be used as the LSF administrator. The LSF administrator has to be a known user on all LSF hosts.
- The LSF software and configuration files are stored in a filesystem that is mounted using NFS on all domains and management servers. You can use the management server, one of the domains, or some NFS server external to the HP AlphaServer SC System to serve this file system. The path (`LSF_TOP`) for the filesystem is usually `/usr/share/lsf`, although you can configure your system differently. Do not use `/`, `/var/lsf` or `/usr/opt/lsf` for `LSF_TOP`

- There should be no nodes on the HP AlphaServer SC system defined in the RMS database that do not physically exist, or that have never been booted. To check for such nodes on the system, run the following command:
  `rmsquery "select name from nodes where cpus=-2"`
  If these nodes do exist, they should be excluded from the RMS partition(s) that are under LSF control.

9.2 Installing a New LSF for HP AlphaServer SC

Installing the LSF software involves the following tasks:

- Before You Install (see Section 9.2.1 on page 9–3)
- Installing LSF for HP AlphaServer SC (see Section 9.2.2 on page 9–3)
- Setting up LSF hosts (hostsetup) (see Section 9.2.3 on page 9–8)
- Configuring the LSF hosts File for Multiple Network Interfaces (see Section 9.4.1 on page 9–13)

For information on upgrading, refer to Upgrading from LSF for HP AlphaServer SC Version 2.5 (see Section 9.3 on page 9–9).

9.2.1 Before You Install

These installation instructions assume that you are installing a new LSF cluster on the HP AlphaServer SC system. See Section 9.3 for information on upgrading from a previous version of LSF.

You can manually upgrade from a previous version or add an HP AlphaServer SC system to an existing LSF cluster, but you should back up your existing LSF configuration files before doing this.

9.2.2 Installing LSF for HP AlphaServer SC

To install LSF for HP AlphaServer SC, follow these steps:

1. Log on as `root` to the management node. If you do not have management nodes, log on to the first node of the first domain.
2. Change to the directory containing the LSF distribution kit. For example:
   `# cd /tmp`
3. Use the `zcat` and `tar` commands to decompress and extract the `lsf6.0_install.tar.Z` distribution file as follows:
   `# zcat lsf6.0_install.tar.Z | tar xvf -`
   Do not extract `lsf6.0_standard_alpha5-rms.tar.Z`.

4. Change to `lsf6.0_install`:
   `# cd /tmp/lsf6.0_install`
5. Edit `lsf6.0_install/install.config` to specify the installation variables you want.
6. Run `lsfinstall` as root:
   `# ./lsfinstall -f install.config`
7. NFS mount the `LSF_TOP` directory (`/usr/share/lsf`), from the node the `lsfinstall` script has been run, to each domain using the standard UNIX mount procedure on the head node of each domain. Add an entry for the `LSF_TOP` directory to the `/etc/member_fstab` file on the head node of each domain. For more information on how to use NFS mount, see the *HP AlphaServer SC System Administration Guide*.

   Note:

   Do not use autoFS to mount an LSF installation.

See the *HP AlphaServer SC Platform LSF® Reference* for information on the `install.config` file.

Table 9–1 shows the required `install.config` variables.

Table 9–1 Required install.config Variables

Variable	Example
LSF_TOP	`"/usr/share/lsf"`
LSF_ADMINS	`"user_name [user_name...]"`
LSF_CLUSTERNAME	`"cluster_name"`
LSF_TARDIR	`"path"`
LSF_LICENSE	`"<none>"`
LSF_ADD_SERVERS	`"atlasD0 atlasD1 atlasD2 atlasD3"`

Table 9–2 shows the variables that require an absolute path.

Table 9–2 Variables that Require an Absolute Path

Variable	Path
LSF_TOP	`"/usr/share/lsf"`

Table 9–2 Variables that Require an Absolute Path

Variable	Path
LSF_LOGDIR	"/var/lsf_logs"
LSF_TARDIR	"path"

See the *HP AlphaServer SC Platform LSF® Reference* for more information about `lsfinstall` and the `install.config` file.

9.2.2.1 Example install.config

Example 9–1 displays a sample `install.config` file used for installing LSF without client nodes.

Example 9–1 Sample install.config file

```
#*************************************************************
# Name:     install.config
#
# Purpose:  LSF installation options file template
#
# $Id: install.config,v 1.9 2002/12/09 22:12:51 pdetina Exp $
#
# Format:
#    o  Each line is in the format of LSF_OPTION_NAME="VALUE"
#    o  Options can only appear once in the file
#    o  Blank lines and lines starting with a pound sign (#)
#       are ignored.
#
# Instructions:
#    1. Edit install.config to specify the options for
#       your cluster. Uncomment the options you want and
#       replace the example values with your own settings.
#    2. Run ./lsfinstall -f install.config
#
# See install.config in the HP AlphaServer SC Platform LSF Reference for details.
#*************************************************************************

# -----------------
LSF_TOP="/usr/share/lsf"
# -----------------
# Required argument
# Full path to the top-level installation directory
# The path to LSF_TOP must be shared and accessible to all hosts
# in the cluster. Cannot be the root directory (/).
# File system containing LSF_TOP must have enough disk space for
# all host types (approximately 300 MB per host type).

# -----------------
```

```
LSF_ADMINS="lsfadmin user1 user2"
# -----------------
# Required argument
# List of LSF administrators
# The first user account name in the list is the primary LSF
# administrator. Cannot be the root user account.
# LSF administrator accounts must exist on all LSF hosts before
# installing LSF.
#
# The primary LSF administrator account is typically named lsfadmin.
# It owns the LSF configuration files and log files for job events.
# It also has permission to reconfigure LSF and to control batch
# jobs submitted by other users. It typically does not have
# authority to start LSF daemons. Usually, only root has
# permission to start LSF daemons.

# -----------------
LSF_CLUSTER_NAME="atlas"
# -----------------
# Required argument
# The name of the LSF cluster
# Must be 39 characters or less, and cannot contain any
# white spaces. Do not use an LSF host name.

# -----------------
LSF_TARDIR="/usr/share/lsf_distrib/6.0"
# -----------------
# Full path to the directory containing the LSF distribution
# tar files
# Default: parent directory of the current working directory
#          where lsfinstall is running.
#          For example, if lsfinstall is running in
#          /usr/share/lsf_distrib/lsf_lsfinstall,
#          the default is /usr/share/lsf_distrib/.

# -----------------
LSF_LICENSE="<none>"
# -----------------
# Full path to the LSF license.dat license file
# Default: license.dat in the parent directory of the current
#          working directory where lsfinstall is running.
#          For example, if lsfinstall is running in
#          /usr/share/lsf_distrib/lsf_lsfinstall,
#          the default is /usr/share/lsf_distrib/license.dat.

# -----------------
LSF_ADD_SERVERS="atlasms atlasD0 atlasD1 atlasD2 atlasD3"
# -----------------
# List of LSF server hosts to be added to the cluster
# Specify a list of host names two ways:
# o  Host names separated by spaces
# o  Name of a file containing a list of host names,
#    one host per line. For example:
```

```
#        LSF_ADD_SERVERS=:lsf_server_hosts
#    The file lsf_server_hosts contains:
#        hosta
#        hostb
#        hostc
#        hostd
# The first host listed is the LSF master host.
# Default: For initial installation, the local host where
# lsfinstall is running

# -----------------
# LSF_ADD_CLIENTS="hoste hostf"
# -----------------
# List of LSF client-only hosts to be added to the cluster
# Specify a list of host names two ways:
# o  Host names separated by spaces
# o  Name of a file containing a list of host names,
#    one host per line. For example:
#        LSF_ADD_CLIENTS=:lsf_client_hosts
#    The file lsf_server_hosts contains:
#        hoste
#        hostf
# Default: None

# -----------------
# UNIFORM_DIRECTORY_PATH="/usr/local/lsf"
# -----------------
# Local directory for the root of the path to the machine-dependent
# LSF files.
#
# Must be an absolute path to a local directory and not shared.
# Cannot be the root directory (/).
#
# Maintains existing uniform directory path for upgrade from
# LSF Version 4.x ONLY. DO NOT use for new installations.
# After lsfinstall is finished, you must run hostsetup on each
# host to set up UNIFORM_DIRECTORY_PATH.
# Default: None

# -----------------
# LSF_QUIET_INST="n"
# -----------------
# Do not display LSF installation messages
# Default: LSF_QUIET_INST="n"


#*********************************************************
# The following options are useful for Dynamic addhost
# feature
#*********************************************************
# -----------------
# LSF_MASTER_LIST="atlasms atlasD0 atlasD1 atlasD2 atlasD3"
# -----------------
```

```
# List of LSF server hosts to be master or master candidate in the cluster
# Specify a list of host names two ways:
# o  Host names separated by spaces
# o  Name of a file containing a list of host names,
#    one host per line. For example:
#        LSF_MASTER_LIST=:lsf_master_list
#    The file lsf_master_list contains:
#        hoste
#        hostf
#    The first host listed is the LSF master host.
# Default: None

#-----------------------------------
LSF_LOGDIR="/var/lsf_logs"
#-----------------------------------
# LSF log directory
```

Note:

LSF client nodes require a flexlm license, which has to be obtained from Platform Computing.

9.2.3 Setting up LSF hosts (hostsetup)

9.2.3.1 What hostsetup does

The `hostsetup` script performs the following:

1. Checks that LSF is available from the host where `hostsetup` is running, and that the host type matches one of the host types installed in `LSF_TOP`.
2. Creates `/usr/opt/lsf` and `/var/lsf` if they do not exist.
3. On on a node of a virtual host, creates the appropriate cluster application availability (CAA) rules that register LSF as a CAA service; also modifies the `/etc/clua_services` file to register the ports for the LSF daemons to match the ports configured in `/usr/share/lsf/conf/lsf.conf`.
4. Adds a Boolean resource `rms` to `lsf.shared` and assigns this resource to all LSF hosts that run on an RMS partition in `lsf.cluster.cluster_name`.
5. Creates the following symbolic links:
   - `/usr/opt/lsf/bin` symbolic link to `LSF_BINDIR`
   - `/usr/opt/lsf/etc` symbolic link to `LSF_SERVERDIR`
   - `/usr/opt/lsf/lib` symbolic link to `LSF_LIBDIR`
   - `/var/lsf/conf` symbolic link to `LSF_ENVDIR`

- /var/lsf/work symbolic link to LSF_WORKDIR
- /var/lsf/work symbolic link to LSB_SHAREDIR
- /usr/opt/include symbolic link to LSF_INCLUDEDIR
- /usr/opt/man symbolic link to LSF_MANDIR
- /usr/opt/misc symbolic link to LSF_MISCDIR
- /usr/opt/install symbolic link to LSF_TOP/LSF_VERSION/install

9.2.3.2 Running hostsetup

To set up LSF hosts, run hostsetup as follows:

1. Log on to each LSF server host as root. Start with the LSF master host.
2. Run hostsetup on each LSF server host. For example:
```
# cd /usr/share/lsf/6.0/install/
# ./hostsetup --top="/usr/share/lsf"
```

If you are setting up LSF on a real LSF host, management server or a stand-alone node, use the --boot="y" option on the hostsetup command to configure system scripts to automatically start and stop LSF daemons at system startup or shutdown. You must run hostsetup as root to use this option to modify the system scripts. The default is: --boot="n".

The --boot option is not needed to set up virtual hosts.

For information on hostsetup usage, enter hostsetup -h.

9.2.4 Next Steps

You have now installed the software on all systems. However, not all configuration steps are complete. To complete the installation, proceed to the section Configuring LSF for HP AlphaServer SC and Starting the LSF (see Section 9.4 on page 9–13).

9.3 Upgrading from LSF for HP AlphaServer SC Version 2.5

This section describes the following:

- Before you Upgrade (see Section 9.3.1 on page 9–9)
- LSF for HP AlphaServer SC Kit (see Section 9.3.2 on page 9–10)
- Running lsfinstall to Upgrade (see Section 9.3.3 on page 9–11)

9.3.1 Before you Upgrade

Before you upgrade, perform the following steps:

1. Back up the LSF_CONFDIR (usually /usr/share/lsf/conf) LSB_CONFDIR (usually /usr/share/lsf/conf/lsbatch), and LSB_SHAREDIR (usually /usr/share/lsf/work) directories and their contents according to procedures at your site.
2. Empty all queues and make sure no jobs are pending before upgrading.
3. Shut down LSF on all domains in your HP AlphaServer SC cluster using the following command:
   ```
   # caa_stop lsf
   ```
   OR

   If your LSF host is a single-node host, set your LSF environment as follows:

   For csh or tcsh:
   ```
   % source /usr/share/lsf/conf/cshrc.lsf
   ```
   For sh, ksh, or bash:
   ```
   $ . /usr/share/lsf/conf/profile.lsf
   ```
   and use the following LSF command to stop the LSF cluster:
   ```
   # lsf_daemons stop
   ```
4. If autoFS has been used to mount the LSF_TOP directory on domains, undo all autoFS mounts and mount the LSF_TOP directory using the standard UNIX mount procedure on the head node of each domain. Add an entry for the LSF_TOP directory to the /etc/member_fstab file on the head node of each domain. For more information on how to undo autoFS mounts and how to use NFS mount, see the *HP AlphaServer SC System Administration Guide*.

Note:

Do not use autoFS to mount an LSF installation.

Note:

Platform LSF for HP AlphaServer SC Version 2.5 and Version 2.6 hosts cannot co-exist in the same cluster. You must upgrade all Platform LSF/HP AlphaServer SC hosts to Version 2.6.

9.3.2 LSF for HP AlphaServer SC Kit

The Platform LSF for HP AlphaServer SC Version 2.6 consists of the following files:

- lsf6.0_install.tar.Z

  This is not the standard LSF Tru64 UNIX installation package. You must use this package to install Platform LSF AlphaServer SC. You cannot use the standard lsf6.0_install.tar.Z package to install.

- lsf6.0_standard_alpha5-rms.tar.Z

9.3.3 Running lsfinstall to Upgrade

To run lsfinstall to upgrade, do the following:

1. Log on as root to the management node.

   If you do not have management nodes, log on to the first node of the first domain.

   The LSF Master Batch Daemon (MBD) must run on either the management server or a node of an HP AlphaServer SC system. The MBD running on an HP AlphaServer SC system can manage a cluster comprising one or more HP AlphaServer SC nodes and other hosts of different architectures. The other hosts must be running LSF 6.0 or lower.

2. Change to the directory containing the HP AlphaServer SC Version 2.6 distribution kit. For example:
   # **cd /tmp**

3. Use the zcat and tar commands to decompress and extract lsf6.0_install.tar.Z as follows:
   # **zcat lsf6.0_install.tar.Z | tar xvf -**

   Do not extract lsf6.0_standard_alpha5-rms.tar.Z.

4. Change to lsf6.0_install as follows:
   # **cd /tmp/lsf6.0_install**

5. Edit lsf6.0_install/install.config to specify the installation variables you want. For information on configuring the install.config file, refer to Section 9.2.2.

   You must make sure that the install.config options match your current installation.

   The path to LSF_TOP must be shared and accessible to all hosts in the LSF cluster. LSF_TOP cannot be the root directory (/), /var/lsf or /usr/opt/lsf.

6. Run lsfinstall as root:
   # **./lsfinstall -f install.config**

   lsfinstall will not change any files under LSF_CONFDIR except cshrc.lsf and profile.lsf. If you add new hosts in LSF_ADD_SERVERS or new LSF_ADMINS, lsfinstall will create a new lsf.cluster.cluster_name.

See Installing LSF for HP AlphaServer SC (see Section 9.2.2 on page 9–3) for information about the lsfinstall script.

9.3.3.1 Using install.config from your existing installation

You can also reuse the install.config file from your existing installation to specify your installation options. The install.config file containing the options you specified for your original installation is located in LSF_TOP/4.2/install/.

Delete LSB_ENABLE_EXTSCHED LSB_RLA_PORT and LOGDIR entries from the `install.config` file.

You can add new hosts in LSF_ADD_SERVERS, and LSF_ADD_CLIENTS. If you do, `lsfinstall` creates a new `lsf.cluster.cluster_name`.

Make sure the following `install.config` variables are set:

- LSF_TARDIR specifies the location of Platform LSF/HP AlphaServer SC LSF package. For example: `LSF_TARDIR=/tmp`

For information on setting up `install.config`, refer to Section 9.2.2.

9.3.3.2 Setting Up LSF Hosts (hostsetup)

For information on `hostsetup`, refer to Section 9.2.3.1. For more information on the `--boot` option, refer to Section 9.2.3.2.

9.3.3.3 Changing the Syntax of EXTSHED

The syntax of the `DEFAULT_EXTSHED` and `MANDATORY_EXTSHED` specification in the queue definitions has changed in this release. The old syntax is now obsolete and new features are supported with the new syntax only.

To change the syntax of the `DEFAULT_EXTSHED` and/or `MANDATORY_EXTSHED` specification to the new syntax (if you intend to use the queue definitions from the Platform LSF for HP AlphaServer SC Version 2.5 release) do the following:

Change the old syntax from:

```
DEFAULT_EXTSHED = [allocation_type][;topology][;flags]
```

to the following new syntax:

```
DEFAULT_EXTSHED = RMS[[allocation_type][;topology][;flags]]
```

The two square brackets are part of the syntax.

Example 9–2 Changing Syntax DEFAULT_EXTSCHED

Old syntax:

```
DEFAULT_EXTSHED = RMS_SNODE;ptile=4;rails=2
```

New syntax:

```
DEFAULT_EXTSHED = RMS[RMS_SNODE;ptile=4;rails=2]
```

Change the syntax for `MANDATORY_EXTSHED` as described in Example 9–2.

9.3.3.4 Migrate any Customized External Executables

Migrate any customized external executables such as `elim` and/or `esub` from `/usr/share/lsf/4.2/alpha5-rms/etc` to `/usr/share/lsf/6.0/alpha5-rms/etc`.

9.3.3.5 Delete the old LSF Installation (optional)

Delete the old LSF installation as follows:

```
# rm -r /usr/share/lsf/4.2/alpha5-rms
```

9.3.4 Next Steps

You have now upgraded from LSF for hp AlphaServer SC Version 2.5. However, not all configuration steps are complete. To complete the installation, continue to Configuring LSF for HP AlphaServer SC and Starting the LSF (see Section 9.4 on page 9–13).

9.4 Configuring LSF for HP AlphaServer SC and Starting the LSF

This section describes the following:

- Configuring the LSF hosts File for Multiple Network Interfaces (see Section 9.4.1 on page 9–13)
- Starting LSF on the SC Cluster (see Section 9.4.2 on page 9–15)
- Verifying that the Configuration is Correct (see Section 9.4.3 on page 9–16)

9.4.1 Configuring the LSF hosts File for Multiple Network Interfaces

Your LSF server hosts can be configured to use multiple network interfaces; for example:

- Domain (for example, `atlasD0`)
- Management network interfaces (for example, `atlas0`)
- External network interfaces (for example, `atlas0-ext1`)

To manage the communication across multiple network interfaces, you must configure the `LSF_CONFDIR/hosts` file to associate the name of LSF server hosts (where the LSF daemons are running) with the external IP addresses and names of the nodes or domain names.

Note:

The `/usr/share/lsf/conf/hosts` file relates the virtual host IP address (that is, the cluster alias address) and the individual hosts in the domain. If there are any errors in this file, the Load Information Manager (LIM) on the master will be unable to communicate with the LIM on the domain.

The LSF hosts file has a compact format where each line in the hosts file represents one host (real or virtual) of the LSF cluster.

- For each real host (standalone hosts or management servers) the LSF hosts file should include the following line:
  `<external host interface address> <host name> <external interface names>`
- For each virtual host the LSF hosts file should include the following line:
  `<cluster alias address> <cluster name> <member names> <member interface names>`

Example 9–3 describes the format of the `LSF_CONFDIR/hosts` file.

Example 9–3 Format of LSF_CONFDIR/hosts file

```
16.21.24.15 atlasms0 atlasms0-ext1
16.21.24.16 atlasms1 atlasms1-ext1
16.21.24.60 atlasD0 atlas0 atlas0-ext1 atlas0-ext2 atlas0-eip0 atlas1 atlas1-ext1
atlas1-eip0 atlas2 atlas2-eip0 atlas3 atlas3-eip0
16.21.24.61 atlasD1 atlas4 atlas4-ext1 atlas4-ext2 atlas4-eip0 atlas5 atlas5-ext1
atlas5-eip0 atlas6 atlas6-eip0 atlas7 atlas7-eip0
```

Example 9-2 is explained as follows:

- System comprises two management servers and two domains configured as virtual hosts
- `16.21.24.15` is the external interface address of `atlasms0` (management server)
- `16.21.24.16` is the external interface address of `atlasms1` (management server)
- `16.21.24.60` is the cluster alias address for `atlasD0` (virtual host `atlasD0`)
- `16.21.24.61` is the cluster alias address for `atlasD1` (virtual host `atlasD1`)
- Each domain (`atlasD0`, `atlasD1`) contains 4 nodes
- The first two members of each domain have an external network interface (`atlas0-ext1`, `atlas1-ext1`, and so on).
- The first member of each domain has an additional external network interface (for example, this could be an ATM network). The extension `-ext2` (for example, `atlas4-ext2`) has been chosen for this example, but another name or extension could have been used.

Note:

If the nodes contain additional external interfaces (for example, `atlas4-ext2`), the names of these interfaces should also be included in the LSF hosts file. This format ensures that the LSF CAA failover operates correctly and that LSF commands can be run from all nodes that run LSF daemons.

9.4.1.1 Configuring LSF_SERVER_HOSTS

To submit LSF commands from the nodes which do not run LSF daemons, define the following variable in the `lsf.conf` file:

```
LSF_SERVER_HOSTS="the list of all LSF hosts"
```

In Example 9–3, the entry should be as follows:

```
LSF_SERVER_HOSTS="atlasms0 atlasms1 atlasD0 atlasD1"
```

For more information about the LSF hosts file, see the *HP AlphaServer SC Platform LSF® Reference*.

9.4.1.2 When to Update the Hosts File

The `LSF_CONFDIR/hosts` file should be updated in the following cases:

- When you add a domain as an LSF server host
- When you add other (external) interfaces to any node in a domain.
- When you add a node to a domain
- If you change any IP address listed in the file
- If you change the name of any network interface

9.4.2 Starting LSF on the SC Cluster

To start the cluster, do the following:

- If a domain is configured as a single virtual LSF host, log on to any node of that domain, and run the following command on each domain on the cluster configured as virtual LAS host:

  ```
  # caa_start lsf
  ```

- On the management server, and on the cluster nodes configured as real LSF hosts, log on to the node and set your LSF environment as follows:

  For `csh` or `tcsh`:

  ```
  % source /usr/share/lsf/conf/cshrc.lsf
  ```

  For `sh`, `ksh`, or `bash`:

  ```
  $ . /usr/share/lsf/conf/profile.lsf
  ```

  Run the following command:

  ```
  # lsf_daemons start
  ```

  Repeat this procedure on each LSF host.

- To test your cluster, run some basic LSF commands (for example, `lsid`, `lshosts`, `bhosts`)

Note:

After testing your cluster, be sure all LSF users include `LSF_CONFDIR/cshrc.lsf` or `LSF_CONFDIR/profile.lsf` in their `.cshrc` or `.profile`.

9.4.3 Verifying that the Configuration is Correct

To check that the configuration is correct, do the following:

1. Log on as `root` to any LSF server.
2. Verify the configuration of the `/etc/clua_services` file, which registers LSF as a CAA service.
   - The port numbers for the LSF daemons `lim` (`LSF_LIM_PORT`), `sbatchd` (`LSB_SBD_PORT`), `res` (`LSF_RES_PORT`), `mbatchd` (`LSB_MBD_PORT`), `rla` (`LSF_RLA_PORT`) must match the ports configured in `/usr/share/lsf/conf/lsf.conf`.
   - Virtual hosts are set up with `in_single`, `out_alias` options, single-node hosts are set up with `in_multi`, `in_noalias` options.
   - Each daemon should have two entries, one for TCP and one for UDP. Sample `/etc/clua_services` entries are as follows:

```
# LSF -- appended Tue Jul 2 14:46:45 EDT 2002
lim 6879/tcp in_single,out_alias
lim 6879/udp in_single,out_alias
res 6878/tcp in_single,out_alias
res 6878/udp in_single,out_alias
sbatchd 6882/tcp in_single,out_alias
sbatchd 6882/udp in_single,out_alias
rla 6883/tcp in_single,out_alias
rla 6883/udp in_single,out_alias
mbatchd 6881/tcp in_single,out_alias
mbatchd 6881/udp in_single,out_alias
```

     If you change the LSF daemon ports in `/usr/share/lsf/conf/lsf.conf`, you must make corresponding changes to all `clua_services` files.

     For more information about the `clua_services` file, see the `clua_services(5)` TruCluster 64 man page.

     For more information about CAA, see the *HP TruCluster Server: High Availability Applications*.
3. Use the `lsload -l` and `bhosts` commands to display the load information for all domains in the cluster.

4. After verifying that LSF is operating properly, make LSF available to your users by having them include `/usr/share/lsf/conf/cshrc.lsf` or `/usr/share/lsf/conf/profile.lsf` in their `.cshrc` or `.profile`.

9.4.3.1 Sample lsload -l output

The status for all domains should be `ok`. Hosts with the static resource `rms` defined do not report `io` or `it` load indices. The output should look similar to the following:

```
# lsload -l
HOST_NAME status  r15s r1m r15m   ut  pg    io  ls it tmp    swp   mem
atlasD0  ok       0.0 0.0 0.0     0%  0.0  -   0  -  7184M 5016M 2432M
atlasD1  ok       0.0 0.0  0.0    0%  0.0  -   1  -  7184M 5004M 2436M
atlas64  ok       0.0 0.0  0.8    0%  0.0  -   2  -  7184M 4756M 32M
atlas65  ok       1.6 1.6 33.2    1%  0.0  -   2  -  7184M 1296M 448M
atlas66  ok       5.2 5.2  5.7    3%  0.0  -   4  -  7184M 4656M 2498M
atlasms ok        0.9 0.9  0.9    22% 0.0 3840 15 0   442M 5088M 2876M
```

9.4.3.2 Sample bhosts output

The status for all domains should be `ok`. The output should look similar to this:

```
% bhosts
```

```
% bhosts
HOST_NAME        status JL/U      MAX      NJOBS    RUN      SSUSP    USUS PRSV
atlasD0          ok       -       128      0        0        0        0       0
atlasD1          ok       -       128      0        0        0        0       0
atlas64          ok       -       4        0        0        0        0       0
atlas65          ok       -       4        0        0        0        0       0
atlas66          ok       -       4        0        0        0        0       0
```

10
Post-Installation Tasks

This chapter provides an overview of the administrative tasks that are normally carried out on a recently installed system. It describes, in high-level detail, the kind of operations normally carried out prior to putting the system into general use. For more detail on how to actually carry out these tasks, see the *HP AlphaServer SC System Administration Guide*.

This chapter presents the following topics:

- State of System Immediately After Installation (see Section 10.1 on page 10–2)
- General Post-Installation Tasks (see Section 10.2 on page 10–3)
- Console Network (see Section 10.3 on page 10–9)
- Storage and File Systems (see Section 10.4 on page 10–10)
- User Administration (see Section 10.5 on page 10–11)
- Cluster Aliases (see Section 10.6 on page 10–12)
- RMS (see Section 10.7 on page 10–12)

10.1 State of System Immediately After Installation

The typical state of your system immediately after installation is expected to be as follows:

- All nodes are booted and operational.
- The first two members of each domain have physical connections to the system storage array. If you have followed the recommended storage guidelines, four 36GB drives are configured for each domain: two as a Mirrorset, one as the generic boot disk, and one as the backup cluster disk. An additional disk is configured as a spareset — the spareset is shared by all domains.
- The Mirrorset stores the clusterwide system storage, specifically `/`, `/var`, and `/usr`. These file systems are seen by all nodes within the domain and contain the installed system software and any optional layered products installed during the installation process.
- Each node has two local disks configured as follows (see Section 2.4.1 on page 2–8):
  - First disk: boot partition containing bootable `vmunix`, `genvmunix` and startup files; node swap; node `/tmp`; and node `/local`
  - Second disk: alternate boot partition; additional swap, `/tmp1`, and `/local1`

  Configuring a second disk allows you to boot from that disk if the primary boot disk fails. *Using* a second disk permits access to its `tmp` and `local` partitions, and its swap space.
- The console manager is running on Node 0, or on the management server (if configured). It is monitoring the console lines of all nodes.
- All nodes are connected to the management network.
- The first two nodes of each domain have external LAN interfaces configured.
- Each domain has been configured as a DNS client and as an NTP client. Each may also be configured as an NIS slave, if NIS is in use.
- Each domain has been configured as both an NFS server and NFS client.
- You may have demonstrator partitions — named `fileserv`, `interactive`, and `parallel` — configured and running. These are normally set up at the end of the installation process as part of the installation verification. The partitions as defined may not match your site requirements.

Before putting the system into general use, you typically need to perform a number of tasks to develop a final system configuration that meets your site requirements and policies. These include such tasks as configuring further network interfaces, storage, and file systems, as well as user administration. The remainder of this section provides a high-level description of the nature of these tasks, and how they differ from configuring a normal SMP system.

10.2 General Post-Installation Tasks

This section describes the following general post-installation tasks:

- Restrict Access to Login Nodes (see Section 10.2.1 on page 10–3)
- Back Up and Restore the Management Server Root (/), /usr, and /var File Systems (see Section 10.2.2 on page 10–4)
- Back Up the Cluster Root (/), /usr, and /var File Systems (see Section 10.2.3 on page 10–7)

10.2.1 Restrict Access to Login Nodes

You may wish to prevent users from logging on to nodes that are used to run parallel programs. This will ensure that the resources of the node are devoted to running the parallel program, and are not affected by interactive users. The procedure to restrict access to login nodes is as follows:

- Identify the nodes that are to be used for parallel programs.
- Generally, such nodes correspond to one or more RMS partitions. You should mark these partitions as being of type `parallel`. This means that `rlogin` (and `rsh` access) is disabled on these nodes. The process for marking RMS partitions as `parallel` is described in Chapter 5 of the *HP AlphaServer SC System Administration Guide*.
- Users use a cluster alias, generally the default cluster alias, to log onto the HP AlphaServer SC system. By default, all nodes in a domain are members of (or join) the default cluster alias. In addition, the alias attributes are the same on all nodes. This means that when a user logs into the system through the default cluster alias, they may log into any of the nodes within the domain. You can configure the default cluster alias properties so that you control the nodes that the cluster alias mechanism will select.

The process to configure the default cluster alias is as follows:

1. Run the Cluster Alias Manager System Management Menu as follows:
   `# sysman clua_aliases`
2. Choose DEFAULTALIAS and select Modify...
3. Modify the properties of each member as follows:
   a. To disable login to a member (node): set the selection weight (`SELW`) to 0 (zero).
   b. To enable login to a member (node): set the selection weight (`SELW`) to a positive number.

These changes do not take effect until you shut down and boot all nodes. To change alias properties without shutting down and booting, run `cluamgr(8)` on every node of a domain.

For example, to restrict users so that they can only login to Node 0 and Node 1 in a 16-node domain, use the following sample command:

```
# scrun -n 'atlas[0-1]' '/usr/sbin/cluamgr -a alias=DEFAULTALIAS,selw=3'
# scrun -n 'atlas[2-15]' '/usr/sbin/cluamgr -a alias=DEFAULTALIAS,selw=0'
```

10.2.2 Back Up and Restore the Management Server Root (/), /usr, and /var File Systems

This section describes how to backup and restore the management server root (`/`), `/usr`, and `/var` file systems.

Specific details for backing up a clustered management server are not included, however, the same basic commands could be extended for that purpose.

10.2.2.1 Backup the Management Server

To back up the management server, perform the following steps:

1. Clone the `root`, `usr`, and `var` file sets as follows:
   ```
   atlasms# clonefset root_domain root rootclone
   atlasms# clonefset usr_domain usr usrclone
   atlasms# clonefset var_domain var varclone
   ```
2. Create mount points for the cloned file systems as follows:
   ```
   atlasms# mkdir /rootclonemnt
   atlasms# mkdir /usrclonemnt
   atlasms# mkdir /varclonemnt
   ```
3. Mount the cloned file systems as follows:
   ```
   atlasms# mount root_domain#rootclone /rootclonemnt
   atlasms# mount usr_domain#usrclone /usrclonemnt
   atlasms# mount var_domain#varclone /varclonemnt
   ```
4. Using a spare disk (assumed to be `dsk1c`) of equal size to the original boot disk, create a backup file domain as follows:
   ```
   atlasms# mkfdmn /dev/disk/dsk1c ms_backup_domain
   ```
5. Create backup `root`, `usr`, and `var` file sets as follows:
   ```
   atlasms# mkfset ms_backup_domain root_bkup
   atlasms# mkfset ms_backup_domain usr_bkup
   atlasms# mkfset ms_backup_domain var_bkup
   ```
6. Create mount points for the backup file systems as follows:
   ```
   atlasms# mkdir /root_bkup
   atlasms# mkdir /usr_bkup
   atlasms# mkdir /var_bkup
   ```
7. Mount the backup file systems as follows:
   ```
   atlasms# mount ms_backup_domain#root_bkup /root_bkup
   atlasms# mount ms_backup_domain#usr_bkup /usr_bkup
   atlasms# mount ms_backup_domain#var_bkup /var_bkup
   ```

8. Dump the original data to the backup file systems as follows:
```
atlasms# vdump -0f - /rootclonemnt | vrestore -xf - -D /root_bkup
atlasms# vdump -0f - /usrclonemnt | vrestore -xf - -D /usr_bkup
atlasms# vdump -0f - /varclonemnt | vrestore -xf - -D /var_bkup
```
9. Unmount the backup file systems as follows:
```
atlasms# umount root_bkup
atlasms# umount usr_bkup
atlasms# umount var_bkup
```
10. Remove the backup mount points as follows:
```
atlasms# rmdir root_bkup
atlasms# rmdir usr_bkup
atlasms# rmdir var_bkup
```
11. Unmount the cloned file systems as follows:
```
atlasms# umount rootclonemnt
atlasms# umount usrclonemnt
atlasms# umount varclonemnt
```
12. Remove the clone mount points as follows:
```
atlasms# rmdir rootclonemnt
atlasms# rmdir usrclonemnt
atlasms# rmdir varclonemnt
```
13. Remove the clone file sets as follows:
```
atlasms# rmfset root_domain rootclone
atlasms# rmfset usr_domain usrclone
atlasms# rmfset var_domain varclone
```

After the above commands have been run, the layout of the file systems (assuming that `dsk0` is the original boot disk) is as follows:

```
disk partition=dsk0a
                     domain=root_domain
                                          filesystem=root
disk partition=dsk0d
                     domain=usr_domain
                                          filesystem=usr
disk partition=dsk0e
                     domain=var_domain
                                          filesystem=var
disk partition=dsk1c
                     domain=ms_backup_domain
                                          filesystem=root_bkup
                                          filesystem=usr_bkup
                                          filesystem=var_bkup
```

10.2.2.2 Restore the Management Server

To restore the management server, perform the following steps:

1. Connect to the console of the management server and ensure that it is at the SRM prompt.
2. Boot the management server from the CD-ROM (or from RIS if available) as follows:
```
P00>>> set bootdef_dev ""
P00>>> boot dqa0
```
3. Exit to a UNIX shell prompt by selecting option 3 from the installation menu.
4. Create the symbolic link necessary for the backup domain (where it is assumed that `dsk1` is the backup disk used earlier):
```
atlasms# mkdir /etc/fdmns/ms_backup_domain
atlasms# cd /etc/fdmns/ms_backup_domain
atlasms# ln -s /dev/disk/dsk1c
```
5. Create mount points for the backup file systems as follows:
```
atlasms# mkdir /var/tmp/root_bkup
atlasms# mkdir /var/tmp/usr_bkup
atlasms# mkdir /var/tmp/var_bkup
```
6. Mount the backup file systems as follows:
```
atlasms# mount ms_backup_domain#root_bkup /var/tmp/root_bkup
atlasms# mount ms_backup_domain#usr_bkup /var/tmp/usr_bkup
atlasms# mount ms_backup_domain#var_bkup /var/tmp/var_bkup
```
7. Create the symbolic link necessary for the original root domain (where it is assumed that `dsk0` is the original boot disk):
```
atlasms# mkdir /etc/fdmns/root_domain
atlasms# cd /etc/fdmns/root_domain
atlasms# ln -s /dev/disk/dsk0a
```
8. Create the symbolic link necessary for the original usr domain (where it is assumed that `dsk0` is the original boot disk):
```
atlasms# mkdir /etc/fdmns/usr_domain
atlasms# cd /etc/fdmns/usr_domain
atlasms# ln -s /dev/disk/dsk0d
```
9. Create the symbolic link necessary for the original var domain (where it is assumed that `dsk0` is the original boot disk):
```
atlasms# mkdir /etc/fdmns/var_domain
atlasms# cd /etc/fdmns/var_domain
atlasms# ln -s /dev/disk/dsk0e
```
10. Create mount points for the original file systems as follows:
```
atlasms# mkdir /var/tmp/root
atlasms# mkdir /var/tmp/usr
atlasms# mkdir /var/tmp/var
```
11. Remove the original file systems as follows:
```
atlasms# rmfset root_domain root
```

```
atlasms# rmfset usr_domain usr
atlasms# rmfset var_domain usr
```

12. Recreate the original file systems as follows:
```
atlasms# mkset root_domain root
atlasms# mkfset usr_domain usr
atlasms# mkfset var_domain usr
```

13. Mount the original file systems as follows:
```
atlasms# mount root_domain#root /var/tmp/root
atlasms# mount usr_domain#usr /var/tmp/usr
atlasms# mount var_domain#var /var/tmp/var
```

14. Restore the backed up data to the original file systems as follows:
```
atlasms# vdump  -0f - /var/tmp/root_bkup | vrestore -xf - -D /var/tmp/root
atlasms# vdump  -0f - /var/tmp/usr_bkup | vrestore -xf - -D /var/tmp/usr
atlasms# vdump  -0f - /var/tmp/var_bkup | vrestore -xf - -D /var/tmp/var
```

15. Shutdown the management server as follows:
```
atlasms# shutdown -h now
```

16. Boot the management server from the original disk as follows:
```
P00>>> set bootdef_dev dka0
P00>>> boot dka0
```

10.2.3 Back Up the Cluster Root (/), /usr, and /var File Systems

When creating the cluster (using `sra clu_create` *`clustername`*), the `sra` command prompts for, and partitions, the backup cluster disk. However, it does not copy the contents of the cluster disk to the backup cluster disk. You must back up the cluster disk contents.

Note:

Before creating the cluster, the `/usr` file system and the `/var` file system may be in separate file domains, or they may be in a single file domain. After creating the cluster (using `sra clu_create` *`clustername`*), the `/usr` file system and the `/var` file system will be in two separate file domains, even if they were in a single file domain before creation of the cluster.

This section describes how to back up the cluster disk. Chapter 2 of the *HP AlphaServer SC System Administration Guide* describes how to boot the cluster using the backup cluster disk created in this section.

To back up the cluster disk, perform the following steps (on the first node of each domain):

1. Make the backup cluster root (`/`), `/usr`, and `/var` file domains and filesets. For example:
```
atlas0# mkfdmn /dev/disk/dsk5b cluster_root_bkup
atlas0# mkfset cluster_root_bkup root
```

```
atlas0# mkfdmn /dev/disk/dsk5g cluster_usr_bkup
atlas0# mkfset cluster_usr_bkup usr

atlas0# mkfdmn /dev/disk/dsk5h cluster_var_bkup
atlas0# mkfset cluster_var_bkup var
```

The primary cluster disk now contains the following:

- The `cluster_root` file domain points to the primary cluster disk (`dsk3`).
- The `cluster_root_bkup` file domain represents storage (`dsk5`) that will be used to back up the contents of the `cluster_root` disk.

The primary cluster disk contains similar file domains for cluster `/usr` and cluster `/var`.

2. Make backup mount points for cluster root (`/`), `/usr`, and `/var`. For example:
```
atlas0# mkdir /root_bkup
atlas0# mkdir /usr_bkup
atlas0# mkdir /var_bkup
```
3. Mount the backup cluster root (`/`), `/usr`, and `/var` file systems. For example:
```
atlas0# mount cluster_root_bkup#root /root_bkup
atlas0# mount cluster_usr_bkup#usr /usr_bkup
atlas0# mount cluster_var_bkup#var /var_bkup
```
4. Create a clone fileset for cluster root (`/`), `/usr`, and `/var` file systems. For example:
```
atlas0# clonefset cluster_root root rootclone
atlas0# clonefset cluster_usr usr usrclone
atlas0# clonefset cluster_var var varclone
```
5. Make mount points for the clone filesets:
```
atlas0# mkdir /rootclonemnt
atlas0# mkdir /usrclonemnt
atlas0# mkdir /varclonemnt
```
6. Mount the clone filesets:
```
atlas0# mount cluster_root#rootclone /rootclonemnt
atlas0# mount cluster_usr#usrclone /usrclonemnt
atlas0# mount cluster_var#varclone /varclonemnt
```
7. Back up the cluster root (`/`), `/usr`, and `/var` file systems. For example:
```
atlas0# vdump -0f - /rootclonemnt | vrestore -xf - -D /root_bkup
atlas0# vdump -0f - /usrclonemnt | vrestore -xf - -D /usr_bkup
atlas0# vdump -0f - /varclonemnt | vrestore -xf - -D /var_bkup
```
8. Step 7 performs an exact copy of the contents of the primary cluster disk. Therefore, the `cluster_root`, `cluster_usr`, and `cluster_var` file domains — on the primary cluster disk and on the backup cluster disk — point to the primary cluster disk (`dsk3`).

   Change these file domains on the backup cluster disk, so that they point to the backup cluster disk (`dsk5`) instead. For example:
```
atlas0# cd /root_bkup/etc/fdmns/cluster_root
atlas0# rm *
atlas0# ln -s /dev/disk/dsk5b

atlas0# cd /root_bkup/etc/fdmns/cluster_usr
```

```
atlas0# rm *
atlas0# ln -s /dev/disk/dsk5g

atlas0# cd /root_bkup/etc/fdmns/cluster_var
atlas0# rm *
atlas0# ln -s /dev/disk/dsk5h
```

9. Since the `cluster_root` and `cluster_root_bkup` file domains on the backup boot disk now point to the same disk (`dsk5`), you must remove the `cluster_root_bkup` file domain on the backup cluster disk. Similarly, you must remove the `cluster_usr_bkup` and `cluster_var_bkup` file domains on the backup cluster disk.

   To remove the backup file domains from the backup cluster disk, enter the following commands:

   ```
   atlas0# rm -rf /root_bkup/etc/fdmns/cluster_root_bkup
   atlas0# rm -rf /root_bkup/etc/fdmns/cluster_usr_bkup
   atlas0# rm -rf /root_bkup/etc/fdmns/cluster_var_bkup
   ```

10. Unmount the backup cluster root (`/`), `/usr`, and `/var` file systems. For example:

    ```
    atlas0# umount /root_bkup
    atlas0# umount /usr_bkup
    atlas0# umount /var_bkup
    ```

11. Remove the mount points for the backup cluster root (/), /usr and /var file systems. For example:

    ```
    atlas0# rmdir /root_bkup
    atlas0# rmdir /usr_bkup
    atlas0# rmdir /var_bkup
    ```

12. Unmount the clone filesets for cluster root (/), /usr and /var file systems. For example:

    ```
    atlas0# umount /rootclonemnt
    atlas0# umount /usrclonemnt
    atlas0# umount /varclonemnt
    ```

13. Remove the mount points for the clone file systems. For example

    ```
    atlas0# rmdir /rootclonemnt
    atlas0# rmdir /usrclonemnt
    atlas0# rmdir /varclonemnt
    ```

14. Use the `file` command to identify the major and minor numbers of the new `cluster_root` device. For example:

    ```
    atlas0# file /dev/disk/dsk5b
    /dev/disk/dsk5b: block special (19/221)
    ```

    Record these numbers; you will need them to boot using the backup cluster disk, if the primary cluster disk fails.

10.3 Console Network

The console manager allows you to monitor and connect to the console of each node within the system. It also produces a time-stamped log of each console's output.

The console manager is automatically configured at installation time, and the information is stored in the `sc_cmf` table in the SC Database. This information in the table defines which ports of the terminal server each node is connected to.

Most sites normally have other devices (for example, RAID controllers) that use a serial port for monitoring and control. It may be convenient to use the console manager facilities to do this. Local extensions to the configuration can be stored in the `/var/sra/cmf.conf.local` file. This file has the same format as the standard configuration file:

```
<name>  <terminal server hostname> 20<port number>
```

If the console manager detects the existence of this file at startup, it will manage the ports defined therein.

For more details on the console network, see Chapter 14 of the *HP AlphaServer SC System Administration Guide*.

10.4 Storage and File Systems

When installed, the system's mandatory file systems (`/`, `/usr`, and `/var`) are served by the first node in each domain. The second node in each domain is also connected to the system storage, for failover.

Each node has its own local storage configured as a mixture of `tmp`, `local`, and swap.

Note:

These local disks are now mounted as "server only", by using the `-o server_only` flag. Specifying this mount option means that if a node panics or is reset, the local file systems are unmounted. If you do not specify this mount option, the file systems will remain mounted if a node panics or is reset, which can make it difficult to delete a member, or to switch to the alternate boot disk.

However, mounting these disks as "server only" also means that these file systems will not be accessible from other members in the cluster. If you wish to remove the `server_only` mount option, run the following command:

```
atlasms# scrun -d atlasD0 '/usr/sbin/rcmgr delete SC_MOUNT_OPTIONS'
```

You may wish to make the following alterations to your storage system:

1. Populate the storage controller with additional spindles and create file systems on the new storage.
2. Connect additional nodes to the storage array.
3. Add further local storage to individual nodes.
4. Make decisions regarding which node serves which file system.

5. Serve file systems to other domains within the HP AlphaServer SC system using SC File System (SCFS). See Chapter 7 of the *HP AlphaServer SC System Administration Guide* for more information about SCFS.
6. Set up a Parallel File System (PFS). See Chapter 8 of the *HP AlphaServer SC System Administration Guide* for more information about PFS.
7. Serve file systems to external clients.
8. Mount file systems served by external servers.

Note:

Each node within a domain is *theoretically* a server to all other nodes within the domain. It is automatically a client of all file systems within the domain. We use the term *theoretically* here because, under typical operation, a small subset of nodes *actually* serves file systems to other nodes.

For example, as configured, the first node of the domain serves the `/`, `/usr`, and `/var` file systems to all other nodes.

10.5 User Administration

Immediately after the installation, no users (with the exception of compulsory system users) have been added to the system.

If your site is using NIS for user administration, then it is not necessary to set up user accounts. NIS, if required, will have been configured at installation time.

If you do not have an external NIS server, then consistent user administration data must be available on each domain.

Note:

User administration data will be consistent within a domain.

To ensure that user administration data is consistent on each domain, perform either of the following tasks:

- On the first domain, use the system administration tools for user administration and replicate the relevant files (`/etc/passwd`, `/etc/group`) to the other domains. If enhanced security is configured, use the `convuser` and `convauth` utilities to extract data from one domain and transfer it to another.
- Nominate one domain as an internal NIS master, and configure the other domains as NIS slave servers.

As well as adding users to the UNIX configuration files, you must register new users with the RMS system. RMS users may operate as standalone users or as members of projects. Therefore, registering new users with RMS may result in updating three RMS database tables — the `users` table, the `projects` table, and the `access_controls` table — as follows:

- The `users` table lists all registered RMS users. It also records project membership for each user. Every user is automatically a member of the default projects.
- The `projects` table lists all registered projects. Users can submit jobs as themselves or as a member of a specific project.
- The `access_controls` table specifies resource limits that apply to a user or project.

The tables can be manipulated by using SQL commands or by using the `sra_user` graphical utility.

SQL commands can be useful when used in site-specific tools to convert batches of users. For more details about RMS administration, see Section 10.7 on page 10–12 of this manual, and Chapter 5 of the *HP AlphaServer SC System Administration Guide*.

10.6 Cluster Aliases

Each domain within the HP AlphaServer SC system can be addressed by a single IP alias. This is called the default alias. For example, in a 64-node system called `atlas`, the default alias of the first domain is `atlasD0`; the default alias of the second domain is `atlasD1`.

The alias `atlasD0` is a special IP address that can refer to any of the first 32 nodes. You may wish to create further aliases; for example, you may wish to use the first four nodes for login/interactive and program development work.

To do this, create an alias (for example, `atlas-dev`), and make the first four nodes members of this alias. The cluster alias feature is quite flexible, you can assign different weights and priorities to different nodes. This can be used to preferentially select specific nodes, or to only select some nodes when others are available.

The cluster alias facility is discussed in more detail in Chapter 19 of the *HP AlphaServer SC System Administration Guide*.

10.7 RMS

For a recently installed system, there are two types of RMS system administration tasks:

- Mandatory RMS Administration Tasks (see Section 10.7.1 on page 10–13)
- Optional RMS Administration Tasks (see Section 10.7.2 on page 10–13)

10.7.1 Mandatory RMS Administration Tasks

The following RMS administration tasks are mandatory:

1. Define and set up partition(s).
2. Start the partition(s).
3. Configure the system to notify the system administrators when significant events occur. For example, an notification might be sent for an RMS partition state transition. Refer to the *HP AlphaServer SC System Administration Guide* for instructions on configuring event notifications.
4. Back up the RMS database.

The installation process creates one project, named `default`. When a user uses `prun` to run a job without specifying a partition, the job is automatically run as a member of the `default` project. Without making any changes, any UNIX user of the system can run parallel jobs on the system. See Chapter 5 of the *HP AlphaServer SC System Administration Guide* for further details.

10.7.2 Optional RMS Administration Tasks

You may wish to configure various RMS tables to reflect site policy, by performing some or all of the following tasks:

1. Add users to the RMS database.

   You can use the graphical utility `sra_user` to import users from the `/etc/passwd` file.
2. Define projects in the RMS database.

   As mentioned earlier, the installation process creates one project, named `default`. You can create additional projects.
3. Set up access controls for users and projects in the RMS database.

   You can limit access to certain partitions. Within a partition, you can specify CPU and memory limits.
4. Define partition types.

   Partition types specify the way in which the partition should be used (for example: interactive development, parallel programs only, both).
5. Define partition attributes.

   Partition attributes control resource usage and apply usage limits to users of the partition.
6. Update the RMS database to specify which users should be notified when the following error conditions are found:
   - Node status has changed (set the `email-node-status` attribute)
   - Partition is blocked (set the `email-partition-blocked` attribute)

- Temperature has changed by more than 2°C (set the `email-module-tempwarn` attribute)
- Event handler did not complete in time (set the `email-event-escalate` attribute)

7. Create a policy for cleaning old entries from the database.

You can use the graphical utility `sra_user` to manipulate RMS database tables.

Alternatively, you can use SQL commands to manipulate the individual tables directly. See Chapter 5 of the *HP AlphaServer SC System Administration Guide* for further details.

11
Troubleshooting

This chapter describes some of the common problems found when installing an HP AlphaServer SC system, and provides solutions to these problems. See also the "Known Problems" section of the *HP AlphaServer SC Release Notes* and the Troubleshooting chapter of the *HP AlphaServer SC System Administration Guide*.

The information in this chapter is structured as follows:

- InstallSC Errors (see Section 11.1 on page 11–2)
- Boot Errors (see Section 11.2 on page 11–2)
- Adding RIS Client With No Default Route (see Section 11.3 on page 11–9)
- Corrupt .member.list File Causes Core Dumps (see Section 11.4 on page 11–10)
- Adding a New Member Fails (see Section 11.5 on page 11–11)
- sra setup Errors (see Section 11.6 on page 11–11)
- Terminal Server Errors (see Section 11.7 on page 11–12)
- rinfo Command Displays UID or Wrong User Name (see Section 11.8 on page 11–13)
- How to Drop and Rebuild the RMS Database (see Section 11.9 on page 11–14)
- rcontrol Reports Errors During Node Boot (see Section 11.10 on page 11–14)
- rcontrol Reports Error When Starting Partitions (see Section 11.11 on page 11–14)
- clu_get_info Prints CONFIGURATION_ERROR (see Section 11.12 on page 11–15)
- How to Powercycle an HP AlphaServer SC System (see Section 11.13 on page 11–15)
- Error When Installing the Elan Subset on a Management Server (see Section 11.14 on page 11–17)
- Database Access Denied Errors (see Section 11.15 on page 11–17)
- Database Access Denied Error on Some Domains (see Section 11.16 on page 11–18)

- Diagnosing Federated Network Routing Problems (see Section 11.17 on page 11–19)
- Wakeup on LAN (WOL) Problem (see Section 11.18 on page 11–19)
- scfsmgr/pfsmgr report Could Not Open Socket (see Section 11.19 on page 11–19)
- Problem with HSG Devices in Installation Process (see Section 11.20 on page 11–20)
- Upgrade Errors (see Section 11.21 on page 11–22)
- Increasing the Number of ptys (see Section 11.22 on page 11–27)
- Increasing Socket Listen Queue Limits (see Section 11.23 on page 11–27)

11.1 InstallSC Errors

If any errors are noted when running `InstallSC` while upgrading the management server in Chapter 4, while building the Management Server in Chapter 5, or while building Node 0 in Chapter 6, then the errors must be addressed before continuing with the installation.

Possible errors that may occur when running the `InstallSC` command are as follows:

- Failure to create the correct RIS area prior to running `InstallSC`. The correct RIS area should be created as instructed in the appropriate chapter. Once the RIS area is created, the `InstallSC` command should be run again. By running the command again, you will quickly step through completed steps to the point where it had failed earlier.
- Failure of the RMS subset installation to add the rms UNIX user or UNIX group. In this case, the `InstallSC` command should be run again with the `-remove` option. The ground rules for NIS should be checked in Configure NIS (see Section 5.1.5.6 on page 5–19) or Configure NIS (see Section 6.1.4.6 on page 6–16). Once the problem is solved, then the `InstallSC` command can be run again with the `-install` option.

The same `InstallSC` utility is used when updating the HP AlphaServer SC software on the domains. During this process, there may be a message to indicate that the RIS area does not exist. This is a benign warning on a domain because the only RIS area required is the one on the management server.

11.2 Boot Errors

This section describes the following boot errors:

- RIS Boot Failures (see Section 11.2.1 on page 11–3)
- RIS Boot Reports a Bootstrap Failure (see Section 11.2.2 on page 11–4)
- RIS Boot Failure: Cannot Determine RIS Home Directory (see Section 11.2.3 on page 11–4)

- Failed to RIS Boot a Node When Attempting to Add It to the Cluster (see Section 11.2.4 on page 11–5)
- Cannot Communicate with the CAA Daemon (see Section 11.2.5 on page 11–6)
- New Member Fails to RIS Boot (see Section 11.2.6 on page 11–6)
- New Member Fails After RIS Boot (see Section 11.2.7 on page 11–6)
- RIS: Boot Error (see Section 11.2.8 on page 11–7)
- sra boot Has Timeout Error (see Section 11.2.9 on page 11–7)
- Elan Error During Node Boot (see Section 11.2.10 on page 11–8)
- Error During Node Boot (see Section 11.2.11 on page 11–8)
- Node Hang During RIS Boot (see Section 11.2.12 on page 11–9)

11.2.1 RIS Boot Failures

The `Bootstrap-fail` error indicates that the system has failed to boot from its network interface. Generally this is because the system has received no response from its BOOTP requests.

Solution:

Perform the following checks:

a. Check that the network cables are connected correctly.

b. Check that the network interface is set to the correct speed (use the `show eia0_mode` SRM Console command).

c. Check that the corresponding port in the FastEthernet switch is configured correctly.

d. Check that spanning trees are disabled on the FastEthernet switch.

e. Check that the `joind` daemon is running on the RIS server (the management server, if used, or the first node of the cluster). If not, restart as follows:
`# /sbin/init.d/dhcp start`

f. Ensure that clients have been added to the RIS database.

Note:

If you abort an install command (`sra abort -command` *`cmd-id`*) while the install is in progress, the abort procedure will attempt to return the node, which may be booting from RIS, to the correct state.

---

g. Check that all disks are in their original disk drive.

Note:

If you move disks, even on the same node, the system may not boot. This is because the UNIX disk number is associated with the disk, and not with the disk drive. When you move a disk, the file domain expects the disk number of the original disk; as this number is now different, the system fails to boot.

Therefore, do not move disks in an HP AlphaServer SC system.

11.2.2 RIS Boot Reports a Bootstrap Failure

The RIS boot may report a bootstrap failure, as follows:

```
16/Mar/2001 00:09:41 Broadcasting BOOTP Request...
16/Mar/2001 00:09:41 Received BOOTP Packet File Name is: /ris/r0k1
16/Mar/2001 00:09:41 local inet address: 10.128.0.47
16/Mar/2001 00:09:42 remote inet address: 10.128.101.1
16/Mar/2001 00:09:42 TFTP Read File Name: /ris/r0k1
16/Mar/2001 00:09:42 netmask = 255.255.0.0
16/Mar/2001 00:09:42 Server is on same subnet as client.
16/Mar/2001 00:10:16 ..bootstrap failure
```

Ensure that the `tftp` entry in `/etc/inetd.conf` is not commented out — the `tftp` entry should be similar to the following:

```
tftp   dgram   udp     wait    root     /usr/sbin/tftpd         tftpd  /tmp
/var/adm/ris /ris
```

If the problem persists, add a debug flag (`-d`) to the `tftpd` entry, as follows:

```
tftp   dgram   udp     wait    root     /usr/sbin/tftpd -d        tftpd  /tmp
/var/adm/ris /ris
```

Debug information is sent to `syslogd`.

11.2.3 RIS Boot Failure: Cannot Determine RIS Home Directory

The RIS boot may fail with the following output:

```
Cannot determine RIS home directory on iamms0
Unable to save existing hardware configuration. New configuration will be used.
*** Performing RIS Installation from iamms0
Loading installation process and scanning system hardware.

The base operating system software is not listed in the table of contents.
This probably means you have not registered this client for an Operating System
product on the RIS server.  It could also mean that this ris area is corrupt.

The installation cannot proceed.
```

This failure can occur if the RIS server is running C2 enhanced security and the RIS user password expired. Try the following command to check this:

```
# rsh -l ris atlasms0 pwd
Your password has expired.
#
```

If your RIS server will have C2 security enabled, the RIS user file must be changed to ensure that the RIS password does not expire and deny client access.

Perform the following steps on the RIS server as superuser to modify the RIS user file if you are going to use RIS with C2 security enabled:

1. Edit the file `/tcb/files/auth.db`. This requires you to use the `edauth` utility.

   Use the `edauth` command line utility or the `dxaccounts` graphical user interface to modify the RIS account. See `edauth(8)` or `dxaccounts(8)` for more information.

   Each field is delimited by a colon (`:`).

2. Set the current password field `u_pwd` to an asterisk (`*`).
3. Set the `u_succhg` value to any non-zero value. This value is a `time_t` type printed with `%ld`.
4. Set the `u_life` and `u_exp` fields to zero.

The following is an example of a modified `/tcb/files/auth/r/ris` user file:

```
ris:u_name=ris:u_id#11:\
        u_oldcrypt#0:\
        u_pwd=*:\
        u_exp#0:u_life#0:\
        u_succhg#79598399:\
        u_suclog#79598399:\
        u_lock@:chkent:
```

After you make these changes, the RIS password should not expire and cause a denial of service to clients.

11.2.4 Failed to RIS Boot a Node When Attempting to Add It to the Cluster

This error occurs if `joind` is not running. This may happen if, during the boot process, `caa` failed to register the `dhcp` service. The boot output is as follows:

```
CAA daemon started
Starting CAA application registration
Cannot communicate with the CAA daemon!
Cannot communicate with the CAA daemon!
Cannot communicate with the CAA daemon!
```

If the `dhcp` service is not registered, `joind` fails to start.

Solution:

Re-register the `dhcp` service:
```
# caa_register dhcp
```

Restart `joind`:
```
# /sbin/init.d/dhcp start
```

11.2.5 Cannot Communicate with the CAA Daemon

See Section 11.2.4.

11.2.6 New Member Fails to RIS Boot

The RIS boot command may fail with either of the following errors:

- `status:failed RIS-Boot-fail - Could not ris boot`
- `panic (cpu 0): vfs_mountroot: cannot mount root`

If the `status:failed RIS-Boot-fail` message is displayed on your HP AlphaServer SC system, perform the checks described in Section 11.2.1 on page 11–3.

If the `panic (cpu 0): vfs_mountroot` message is displayed on your HP AlphaServer SC system, perform the following steps:

1. Ensure that the RIS server is configured as an NFS server.
2. If the RIS server is running on one of the cluster nodes, ensure that the file `/etc/bootptab` on the RIS server has an entry similar to the following:
   `.ris0.alpha:tc=.ris.dec:bf=/ris/r0k1:sa=`*`www.xxx.yyy.zzz`*`:rp="atlasD0:/ris/r0p1":`

   where the `sa` field contains the default cluster alias IP address (in the above example, *`www.xxx.yyy.zzz`*), and the `rp` field contains the default cluster alias name (in the above example, `atlasD0`).

11.2.7 New Member Fails After RIS Boot

Adding a member to a domain may fail with the following error just after RIS boot:
```
02/Mar/2000 19:36:58 # mount 10.128.0.29:/cluster/admin /mnt
02/Mar/2000 19:37:08 Cannot talk to mount server at 10.128.0.29: RPC: Timed out
```

If this message is displayed on your HP AlphaServer SC system, perform the following steps on the first node of the domain:

1. Stop NFS as follows:
   ```
   atlas0# /sbin/init.d/nfs stop
   ```
2. Kill the portmap daemon.
3. Restart NFS as follows:
   ```
   atlas0# /sbin/init.d/nfs start
   ```

11.2.8 RIS: Boot Error

The RIS boot command may continuously output a message similar to the following:

```
..Block FFFFFFF2 is not in any zone
```

If this message is displayed on your HP AlphaServer SC system, perform the following steps:

1. Start RIS, and check that the first RIS product is Tru64 UNIX.
2. Check that the booting node is a client of the Tru64 UNIX product.
3. Retry the RIS boot.

11.2.9 sra boot Has Timeout Error

This error occurs because the node fails to display the `login:` prompt after being booted. The boot process appears to have hung. The cause of the problem depends on the state of the node, as follows:

- The node was previously working normally. The problem may be caused by a HP AlphaServer ES40 fault that prevents successful reboot. Try the `sra` command described below to powercycle the node.
- The node is still being configured. There are many possible causes. Try the solutions described below.

Solution:

1. Manually connect to the console using the `sra console` command. Press Ctrl/C. If the boot process now continues, the boot process was probably hung while trying to NFS-mount remote file systems. Check that the network cables are attached, and that the first node of each domain is booted and is operating correctly. If you correct an error, remember to shut down and then boot the node so that file systems are correctly mounted.
2. If the node is unresponsive, shut it down, then boot it as follows, so that you can observe the message printed to the console.
   a. To halt the node, close your console connection and use the `sra shutdown` command.
   b. Reconnect to the console using the `sra console` command.
   c. Boot the system from the appropriate disk. Stay connected so that you can observe the complete boot sequence. You may spot errors that explain the failure to boot correctly.
3. Finally, powercycle the node using the `sra` command, as follows:
   a. Make sure that you are not connected to the console.

b. On the first node of the domain, issue the following command (where `atlas` is an example system name):
```
# sra power_off -nodes atlas7
```
c. Wait for 30 seconds.
d. On the first node of the domain, issue the following command (where `atlas` is an example system name):
```
# sra power_on -nodes atlas7
```

Note:

If you manually power down a node, you must always wait 30 seconds before powering the node up again.

11.2.10 Elan Error During Node Boot

A node boot may fail with the following error:

```
panic (cpu 0): elan0: cannot determine network position - assuming disconnected
```

If this message is displayed on your HP AlphaServer SC system, ensure that the cable connecting the node to the HP AlphaServer SC Interconnect switch is plugged in, or reseat this cable.

11.2.11 Error During Node Boot

A node boot may fail with the following error:

```
01/Feb/2000 10:10:26 Waiting for cluster mount to complete
01/Feb/2000 10:10:26 panic (cpu 0): cfs_mountroot: cfs_lock_devts failed for boot partition
01/Feb/2000 10:10:27 syncing disks...
01/Feb/2000 10:10:28 trap: invalid memory write access from kernel mode
01/Feb/2000 10:10:28
01/Feb/2000 10:10:28     faulting virtual address:     0x0000000000000008
01/Feb/2000 10:10:28     pc of faulting instruction:   0xfffffc00002c80bc
01/Feb/2000 10:10:28     ra contents at time of fault: 0xfffffc000066a97c
01/Feb/2000 10:10:28     sp contents at time of fault: 0xfffffe05449e7650
01/Feb/2000 10:10:28
01/Feb/2000 10:10:28
01/Feb/2000 10:10:28 DUMP: Will attempt to compress 257818624 bytes of dump
01/Feb/2000 10:10:28     : into 3923763184 bytes of memory.
01/Feb/2000 10:10:28 DUMP: Dump to 0x200005: ..halted CPU 1
01/Feb/2000 10:10:33 halted CPU 2
01/Feb/2000 10:10:33 halted CPU 3
01/Feb/2000 10:10:33
01/Feb/2000 10:10:34 halted CPU 0
01/Feb/2000 10:10:34
```

If this message is displayed on your HP AlphaServer SC system, you may be trying to boot a node into a cluster of which it is no longer a member.

11.2.12 Node Hang During RIS Boot

A node boot may hang if it is RIS-booted and there is a speed mismatch; for example, if the Summit switch port for that node is configured for one speed, and the Ethernet card on the node is configured for a different speed. Both should be configured for 100Mbps.

11.2.13 RIS: File Open Failure for BOOTP

When `bootp` packets cannot solicit a response and fail with the following message:

```
P00>>>boot -p bootp eib0
(boot eib0.0.0.2005.1 -flags A)
Trying BOOTP boot.
Broadcasting BOOTP Request...
..file open failed for bootp/eib0.0.0.2005.1
```

Enter the following command:

```
P00>>>net -stop eia0
P00>>>net -start eia0
```

Then, enter the `bootp` command once again, as follows:

```
P00>>>boot -p bootp eia0
(boot eia0.0.0.2004.1 -flags A)
Trying BOOTP boot.
Broadcasting BOOTP Request...
.Received BOOTP Packet File Name is: /ris/r0k1
```

11.2.14 RIS: Boot Failure Access Violation

The RIS boot may fail with the following message:

```
P00>>>boot -protocol bootp eia0
(boot eia0.0.0.2004.1 -file vmunix -flags A)
Trying BOOTP boot.
Broadcasting BOOTP Request...
Received BOOTP Packet File Name is: /ris/r0k1
local inet address: 10.128.0.1
remote inet address: 10.128.101.2
TFTP Read File Name: vmunix
netmask = 255.255.0.0
Server is on same subnet as client.
..Tftp error 2: Access violation.
bootstrap failure
```

Check the nodes `boot_file` SRM variable, and ensure that it is blank.

11.3 Adding RIS Client With No Default Route

Adding a client to RIS results in the following warning if there is no default route:

```
usage: ifconfig interface
        [ af [ address[/bitmask] [ dest_addr ] ] [ up ] [ down ] [ netmask mask ] ]
```

```
[ broadcast address ]
[ alias address[/bitmask | netmask mask ] ]
[ -alias address ]
[ aliaslist address-list[/bitmask | netmask mask ] ]
[ -aliaslist address-list ]
[ abort ]
[ delete [ address ] ]
[ metric n ]
[ trailers | -trailers ]
[ promisc | -promisc ]
[ allmulti | -allmulti ]
[ filter | -filter ]
[ arp | -arp ]
[ ipmtu mtu ]
[ speed value ]
[ debug | -debug ]
[ trustgrp group ]
[ add [interface-list] ]
[ switch ]
[ remove ]
[ nrtimers value-list ]
[ autofail [value] | -autofail ]
```

This is just a warning; the client is successfully added. However, to avoid this warning, you should set a default route.

11.4 Corrupt .member.list File Causes Core Dumps

If the `sra add_member` command fails, the ASCII file `/cluster/admin/.member.list` may become corrupt. This causes certain commands — such as `clu_get_info`, `dsfmgr`, and `hwmgr` — to core dump.

The workaround is to re-create the `/cluster/admin/.member.list` file, using any text editor, as shown in the following example:

```
# This is the cluster member list file.
# This file is created and modified by the cluster administration commands.
# The format of this file is:
#  o Lines starting with a # are comments
#  o The 1st non-comment line is the number of members entry, which begins
#    with the word 'members' followed by a space and an integer whose value
#    is equal to the number of cluster members.
#  o One line for each member in the form member<id>, where:
#    <id> is a an integer in the range 1-63 inclusive.
# DO NOT edit this file!
################################################################################
members 2
member1
member2
```

11.5 Adding a New Member Fails

When adding a new member to a cluster, you may see the following error:

```
15:44:28 atlas1     Info:     Adding Member atlas1 (id:1) to cluster
15:45:03 atlas1     Info:     Creating Disk
15:45:07 atlas1     Info:     Creating AdvFS
15:45:08 atlas1     Info:     Creating member-specific files
15:45:08 atlas1     Info:     Creating new members root member-specific files
15:45:27 atlas1     Info:     Error: Tar returned an error when coping member
specific files to: /cluster/members/member2/
```

The reason for the failure is that the root file system (`/`) is full. Free some space in the root file system, and add the member again.

11.6 sra setup Errors

If any nodes fail the hardware probe during `sra setup` (see Section 5.2 on page 5–36 or Section 6.2 on page 6–24), a list of failed nodes is written to the `/tmp/sra_hosts.failed` file.

The hardware probe will fail in the following situations:

- The Node is Not at the SRM Prompt (see Section 11.6.1 on page 11–11)
- The Console Logger is Misconfigured (see Section 11.6.2 on page 11–12)

11.6.1 The Node is Not at the SRM Prompt

To find out whether a failed node is at the SRM prompt, log in to its console by running the following command in another window:

```
# sra -cl nodename
```

Note:

The node may have started the Tru64 UNIX Factory-Installed Software startup procedure. If so, the console prompts you to answer the following question:

```
Would you like to continue? (y/n):
```

Enter **n** to return the node to the SRM prompt; then enter Ctrl/G to exit the console.

The `sra setup` command asks if you would like to reset the failed nodes. If you have returned the node to the SRM prompt as described in the Note above, enter **No**. Otherwise, enter **Yes** to reset the failed nodes and return them to the SRM prompt.

The `sra setup` command asks if you would like to try the hardware probe again. Enter **Yes**.

The `sra setup` command asks if you would like to initialize the hardware during the probe. If the node had previously started the Tru64 UNIX Factory-Installed Software startup procedure as described in the Note above, enter **No**. Otherwise, enter **Yes**.

11.6.2 The Console Logger is Misconfigured

The console manager is automatically configured at installation time, and the information is stored in the `sc_cmf` table in the SC Database. This error indicates that the table contains incorrect information. To fix this problem, perform the following steps:

1. Exit the `sra setup` command.
2. Stop the console logger, as follows:
   `# /sbin/init.d/cmf stop`
3. Rerun the `sra setup` command.

Note:

Take care when entering information at the `sra setup` prompts — if you enter incorrect values for certain information (for example, terminal server IP address), the `cmfd` daemon will not start.

The `sra setup` command will recreate the `sc_cmf` table with correct information from the SC database, and will restart the `cmfd` daemon.

11.7 Terminal Server Errors

This section describes the following terminal server errors:

- Terminal Server Configuration Has Changed (see Section 11.7.1 on page 11–12)
- Terminal Server Refuses a Connection (see Section 11.7.2 on page 11–12)

11.7.1 Terminal Server Configuration Has Changed

If you press the Reset button on the terminal server, it loses its configuration information and is reset to the factory configuration. Reconfigure the terminal server as described in Chapter 14 of the *HP AlphaServer SC System Administration Guide*.

11.7.2 Terminal Server Refuses a Connection

The terminal server allows only one connection to a node's console port to exist at any point in time. If you attempt to connect to a console port that is already in use, the following messages are reported in the Xterm window:

```
Console-Busy port already in use
Press return to continue
```

Press Return to close the connection.

If you need to connect to the console port, follow these steps:

1. Check to see if anyone is connected to the console port on that node. To find the user process that is connected to the console, run the following command:
   # **ps -a | grep sra| grep *nodename***

   Search for output similar to one of the following:
   ```
   18288 pts/2 I  +     0:00.09 /usr/bin/sra console -cl <nodename>
   18288 pts/2 I  +     0:00.09 /usr/bin/sra -cl <nodename>
   ```

   where `node` is the name of the node to which you wish to connect.

   If you can identify the person who is connected to the node's console, ask them to close their connection.

   If you cannot identify the person who is connected to the node's console, or if you fail to find an `sra console` process, go to step 2.

2. The `sra ds_logout` has three possible actions which you can use to recover console access to a node.

   a. Enter the following command as the `root` user:

      # **sra ds_logout -nodes *nodename***

      The will end a user's connection, or a ghost connection caused by the terminal server failing to close an sra console session.

   b. Enter the following command as the `root` user:

      # **sra ds_logout -ts yes -nodes *nodename***

      This will cause CMF to drop its connection to the terminal server. It will reconnect after a short delay. This option is useful if the problem had been caused by, for example, the physical cable being disconnected and reconnected, causing the CMF connection to "hang".

   c. Enter the following command as the `root` user:

      # **sra ds_logout -force yes -nodes *nodename***

      This will issue a logout command for the node, directly to the terminal server.

11.8 rinfo Command Displays UID or Wrong User Name

The `rinfo` command may display the UID instead of the user name, or may display a different username than the name of the user who allocated the resource. This indicates that the node on which the `allocate` was performed has a different set of users than the set of users on the `rmshost` system (the management server). Typically, this happens if the `/etc/passwd` files differ, or if the same NIS server is not being used by all nodes (including the management server).

To correct this problem, ensure that the UID and username — of all RMS users — are the same on all nodes in the system.

11.9 How to Drop and Rebuild the RMS Database

To drop and recreate the RMS database, perform the following steps on the RMS master node (the management server, if used, or Node 0):

1. Halt all other nodes.
2. Stop the RMS daemons by running the `rmsctl stop` command.
3. Drop the old database using the `msqladmin drop` command, as follows (where `atlas` is an example system name):
   `# msqladmin drop rms_atlas`

   Caution:

   If the RMS database is dropped by using the command: **`# msqladmin drop rms_atlas`**, the *entire* SC database is dropped. The SC database needs to be recreated by using the `sra setup` command, and not the `rmsbuild` command.

4. Create the new database using the `sra setup` command (if the management server is used, see Section 5.2 on page 5–36, or if Node 0 is used, see Section 6.2 on page 6–24).
5. Start RMS on the remaining nodes by running the `rmsctl start` command.

11.10 rcontrol Reports Errors During Node Boot

The rcontrol command will report a failure during node boot if the parallel cable is not connected to the switch. The failure message can take several forms — two of these are shown below:

```
timestamp { 03/12/01 18:06:47 } atlas1 Info:    rcontrol: Error: can't find
machine containing node atlas0
18:40:22 atlas3       Info:    rcontrol: Error: swmgr failed to connect atlas3:
check control cable is plugged
18:40:22 atlas3       Info:                    in
```

You can ignore these messages.

11.11 rcontrol Reports Error When Starting Partitions

The following message may be reported when you attempt to start an RMS partition for the very first time:

```
# rcontrol start partition parallel
rcontrol: Error: can't start partition parallel: bad Elan Id
ordering
```

This message implies that the nodes are not connected in sequence to the switch ports (for example, two cables may have been swapped in error).

To solve this problem, halt all suspected nodes, and run the command:

```
atlasms# sra elancheck -nodes "atlas[0-1023]"
```

This will report whether all nodes are connected to the correct elan ports in ascending order, and inform you which nodes are offending if appropriate.

11.12 clu_get_info Prints CONFIGURATION_ERROR

If `/etc/rc.config` has been corrupted, `clu_get_info` displays a warning similar to the following:

```
Cluster memberid = 2
Hostname = CONFIGURATION_ERROR
Cluster interconnect IP name = CONFIGURATION_ERROR
Member state = UP
```

A possible cause for this is that the root (`/`) file system is full and someone has attempted to edit the `/etc/rc.config` file.

The general solution is as follows:

1. Restore the `/etc/rc.config` file (copy from backup or from another location).
2. Shut down the problem node.
3. When the shutdown has finished, boot the node.

11.13 How to Powercycle an HP AlphaServer SC System

This section describes the order in which you should perform the following activities:

- Shutting Down (see Section 11.13.1 on page 11–15)
- Powering Off (see Section 11.13.2 on page 11–16)
- Powering On (see Section 11.13.3 on page 11–16)
- Starting Up (see Section 11.13.4 on page 11–17)

Chapter 2 of the *HP AlphaServer SC System Administration Guide* provides more details about how to shut down and start up an HP AlphaServer SC system.

11.13.1 Shutting Down

When shutting down an HP AlphaServer SC system, do so in the following order:

1. Shut down all nodes.
2. If using a management server, shut it down.
3. Shut down the RAID controllers.

11.13.2 Powering Off

When powering off an HP AlphaServer SC system, do so in the following order:

1. Shut the system down, as described in Section 11.13.1.
2. If using a management server, power off all nodes. If not using a management server, power off all nodes except the first node in the first domain.
3. If using a management server, power it off. If not using a management server, power off the first node in the first domain.
4. For non-federated installations, power off the HP AlphaServer SC Interconnect switch(es). For federated installations, power off the HP AlphaServer SC Interconnect in the following order:
   a. node-level switches
   b. top-level switches
   c. clock-distribution boxes.
5. Power off the terminal servers and the ethernet switches.
6. Power off the Fibre Channel switches.
7. Power off the RAID controllers.

11.13.3 Powering On

When powering on an HP AlphaServer SC system, do so in the following order:

1. Power on the RAID controllers.
2. Power on the Fibre Channel switches.
3. Power on the ethernet switches and the terminal servers.
4. For non-federated installations, power on the HP AlphaServer SC Interconnect switch(es). For federated installations, power on the HP AlphaServer SC Interconnect in the following order:
   a. clock-distribution boxes
   b. top-level switches
   c. node-level switches
5. If using a management server, power it on. If not using a management server, power on the first node in the first domain.
6. Power on all remaining nodes.
7. Start the system up, as described in Section 11.13.4.

11.13.4 Starting Up

When starting up an HP AlphaServer SC system, do so in the following order:

1. If using a management server, boot it up.
2. Boot the minimum number of nodes to allow each domain to attain quorum.
3. Boot all remaining nodes.

All of the other HP AlphaServer SC components start automatically when powered up.

11.14 Error When Installing the Elan Subset on a Management Server

The following error may be reported when installing the Elan subset on a management server:

```
Configuring "Elan Device Driver TS2.5-BL5-0021_EFT4" (ELNMOD320)
eip0: cannot create kernel comms (rail 0) rcvr service for 65536 byte svc(2)
eip: failure to attach to kernel comms - check if an elan is present
The dynamically loading Elan Device Driver has been installed on your system.
Installation of the Elan Device Driver (ELNMOD320) subset is complete.
```

You can ignore this message.

11.15 Database Access Denied Errors

To make modifications to the database you must be the root user and a member of the RMS group. So it is normal for non-root users to get "access denied" errors if they attempt to modify the database. However, if the root user gets access denied errors you should take the following actions to identify the problem:

- Check that the root user is a member of the RMS group. On an HP AlphaServer SC, the RMS group should be present in `/etc/group` (and not in NIS). The entry for the RMS group should be present and identical in `/etc/group` on all domains and management servers.
- Check that there is an RMS user in `/etc/passwd`. The entry for the RMS user should be present and identical in `/etc/passwd` on all domains and management servers.
- Check that the `mSQL` daemon was started by the root user.
- If the access denied error occurs when connecting to the database, i.e., before you attempt to perform and database modification, this might indicate a problem with the cookie security mechanism. You can determine whether the access denied error occurs on connect or on a modify by simply running `rmsquery` as `root`. If the error occurs

before `rmsquery` returns a prompt, then the error has occurred on connect. However, if you can perform a query operation, but not an update operation, then the connect has succeeded.

You can disable the cookie mechanism by running the following command on `rmshost` as follows:

```
# sra cookie -enable no
```

Once you do this, you are operating in a less secure mode. Once you have determined and corrected the source of the problem (see Section 11.16), you can re-enable the cookie mechanism as follows:

```
# sra cookie -enable yes
```

11.16 Database Access Denied Error on Some Domains

If the root user or an SC daemon is getting access denied errors on some domains, but not on others or is getting errors on all domains but not on the management server, you should review the information in Section 11.15 about the RMS user and group.

However, if the RMS user and group information appear correct on every domain, you should disable cookies by running the following command on `rmshost`:

```
# sra cookie -enable no
```

If you no longer get access denied errors, this indicates a failure in the cookie security mechanism. You can diagnose potential causes of this failure as follows:

- The cookie mechanism is managed by the daemons associated with the `scrun` command. These are `gxmgmtd`, `gxclusterd` and `gxnoded`. You should check that:
  - `gxmgmtd` is running on the management server (or member 1 of the first domain if there is no management server)
  - `gxclusterd` is running on all nodes in the system

  If not, you should start the daemons as follows:

  ```
  # /sbin/init.d/gxdaemons start
  ```

  You must run this command on each node or management server where the daemons are not running.
- Check that the file `/var/cookies/root` is identical on all management servers on each domain. The file must be owned by `root` and `group rms` and have permissions `owner:rw`, `group:r`. If one or more domains have a `/var/cookies/root` file that is different than the host where the database is located (`rmshost`), you can copy the file from `rmshost` to the domains.

Once, the gx daemons are working normally or you have manually copied the `/var/cookies/root` file, you can reenable the cookie security mechanism by running the following command on `rmshost`:

```
# sra cookie -enable yes
```

You can check if cookies are enabled or not by running the following command on `rmshost`:

```
# sra cookie
```

11.17 Diagnosing Federated Network Routing Problems

When a federated network is wired correctly, a boot sequence for any node should display the following message:

```
28/Feb/2002 10:58:07 elan0: nodeid=127 level=5 numnodes=512
(adaptive routing ok)
28/Feb/2002 10:58:07 elan0: New Nodeset [127]
```

When a federated network is not wired correctly, a boot sequence for any node may display the following message:

```
27/Feb/2002 13:13:01 elan0: nodeid=127 level=5 numnodes=512
(adaptive routing disabled 0x14)
27/Feb/2002 13:13:01 elan0: New Nodeset [127]
```

To identify the cause of the error, run the SC Viewer application to check for the following potential problems:

- QM410 controller card not working
- QM410 controller card with incorrect firmware revision
- Badly populated combination of high level cards in node-level chassis
- Incorrect cabling of uplinks from node-level cards to top level chassis

11.18 Wakeup on LAN (WOL) Problem

The WOL feature may report some problems if the DLI kernel subsystem is unconfigured on the management server (or running node). This problem may occur even when the node is at the SRM prompt.

To resolve this problem, configure the DLI kernel subsystem on the management server by running the following command:

```
atlasms# sysconfig -c dli
```

11.19 scfsmgr/pfsmgr report Could Not Open Socket

If `scfsmgr` or `pfsmgr` cannot connect to the `scmountd`, they report an error such as:

```
Could not open socket to the daemon: couldn't open socket: connection refused
```

To correct this, use one of the following procedures:

- If you have a stand alone management server:
  a. Log onto the management server
  b. Stop `scmountd` as follows:
     # **/sbin/init.d/scmountd stop**
  c. Wait two minutes and restart it as follows:
     # **/sbin/init.d/scmountd start**
- If you have a dual-redundant management server or have no management server:
  a. Log into the management server or domain 0
  b. Stop `scmountd` as follows:
     # **caa_stop SC30scmountd**
  c. Start `scmountd` as follows:
     # **caa_start SC30scmountd**

11.20 Problem with HSG Devices in Installation Process

The install process gets as far as the `clucreate` stage, which requires access to the HSG storages area, before failing with the following message:

```
20:41:56     Node                        eve12      -- <Failed:cluCreate> Error:
createclusterlabel (primary) failed - /usr/sra/bin/createclusterlabel[311]:
rootDiskSize*rootPartitionSize/100: bad number: <ABORT code completed>

Command has finished:
Command  165 (install) eveC : eve[12-15] -- <Error> Command Failed on:
eve12
*** Node States *** Errored: eve12
```

The explanation is that the HSG controllers create "reserves" on the disks belonging to a cluster when the cluster is created, that is, a locking mechanism that allows access to the HSG disks from a particular cluster only.

When the cluster is down "persistent reserves" appear beside each disk on the HSG controller. The problem may appear as a hardware issue but is caused by this access problem.

The disks can be seen but not accessed, and display an I/O error or a more detailed hardware error. This can be seen in booted nodes, or RIS-booted nodes as follows:

```
# hwmgr -v d
 HWID: Device Name          Mfg      Model            Location
 ------------------------------------------------------------------------------
    6: /dev/dmapi/dmapi
    7: /dev/scp_scsi
```

```
    8: /dev/kevm
   37: /dev/disk/floppy0c            3.5in floppy     fdi0-unit-0
   73: /dev/disk/dsk0c      COMPAQ   BD018635C4       bus-0-targ-0-lun-0
   74: /dev/disk/dsk1c      COMPAQ   BD018635C4       bus-0-targ-1-lun-0
   75: /dev/disk/dsk2c      DEC      HSG80            IDENTIFIER=2
   76: /dev/disk/dsk3c      DEC      HSG80            IDENTIFIER=3
   77: /dev/disk/dsk4c      DEC      HSG80            IDENTIFIER=1
   78: /dev/disk/dsk5c      DEC      HSG80            IDENTIFIER=4
   79: /dev/disk/cdrom0c    COMPAQ   CRD-8402B        bus-3-targ-0-lun-0
   80: /dev/cport/scp0               HSG80CCL         bus-2-targ-0-lun-0
# disklabel -p dsk4
disklabel: dsk4: I/O error

# disklabel -p dsk3
cam_logger: SCSI event packet
cam_logger: hardware_id=-86 bus 2 target 0 lun 12
cdisk_op_spin
Device Not Ready
Hard Error Detected
Hardware ID = -86
DEC     HSG80           V86F
Active CCB at time of error
CCB request completed with an error
disklabel: dsk3: I/O error
#
```

However, on the HSG controller, the "persistent reserved" can be seen as follows:

```
D10                                          DISK60000    (partition)
LUN ID:      6000-1FE1-0009-5160-0009-0320-0632-01F3
IDENTIFIER = 1
Switches:
RUN                    NOWRITE_PROTECT        READ_CACHE
READAHEAD_CACHE        WRITEBACK_CACHE
MAX_READ_CACHED_TRANSFER_SIZE = 32
MAX_WRITE_CACHED_TRANSFER_SIZE = 32
Access:
EVE12,    EVE12B,    EVE12C,     EVE13,    EVE13B,    EVE13C
State:
ONLINE to this controller
Persistent reserved
NOPREFERRED_PATH
Size:             35557306 blocks
Geometry (C/H/S): ( 7000 / 20 / 254 )
```

To clear these reserves so that the disks are accessible again, run the following command from a node in the relevant cluster, from Single User Mode:

/usr/sbin/cleanPR clean

To show any existing reserves, before cleaning them, and to check that the script has run properly, run the command:

/usr/sbin/cleanPR show

11.21 Upgrade Errors

This section describes the following upgrade errors:

- Upgrade Setup: RIS Host Appears to Be Invalid (see Section 11.21.1 on page 11–22)
- Problem with dupatch Failure when Upgrading an HP AlphaServer SC System (see Section 11.21.2 on page 11–22)
- Restarting a Failed Upgrade (see Section 11.21.3 on page 11–23)
- Problem with Dependency on First Cluster (see Section 11.21.4 on page 11–24)
- Problems when clu_quorum does not Complete (see Section 11.21.5 on page 11–24)
- Upgrade Backup: node failed with cfs_find_drv_handle panic (see Section 11.21.6 on page 11–24)
- Upgrade Backup: node failed with cfs_issue_localroot_do_mount (see Section 11.21.7 on page 11–25)
- Restoring from Backup Can Sometimes Fail (see Section 11.21.8 on page 11–25)

11.21.1 Upgrade Setup: RIS Host Appears to Be Invalid

An upgrade setup may fail with the following error:

```
Permission denied.
SC_UPGRADE: <name-of-ris-server> appears to be invalid!
```

This error may appear if the RIS user accounts `.rhosts` file (`/var/adm/ris/.rhosts`) is incomplete. Make sure that the default cluster alias of the cluster being upgraded is a RIS client.

11.21.2 Problem with dupatch Failure when Upgrading an HP AlphaServer SC System

The `dupatch` script may fail while upgrading an HP AlphaServer SC system and return the following error message:

```
*** You have selected 1 patches ***
/native_threads//usr/opt/compaq/svctools/common/jre/bin/../bin/alpha/
native_threads/java is
/usr/opt/compaq/svctools/common/jre/bin/../bin/alpha/native_threads/
/usr/opt/compaq/svctools/common/jre/bin/../bin/alpha/native_threads/java
is /usr
/opt/compaq/svc: no space
```

To solve this problem, kill the java process and re-run the `sra upgrade` command.

11.21.3 Restarting a Failed Upgrade

If the upgrade fails and for some reason will not restart the `sra upgrade`, you may need to check that the `clusters/nodes` in question are in the correct state to restart the upgrade. In order to successfully restart the upgrade, here are a few simple tips:

1. Check the current state of the upgrade by querying the `sc_domain` table
2. For the clusters not at `Upgraded` check the members are in the state identified in Table 11–1.

Note:

For Shortcut Upgrade, all nodes should be at `SYSTEMUP` at the start of all states.

Table 11–1 Full Upgrade States

State	Lead Nodes	Other Nodes
Pre_Upgrade	SYSTEMUP	SYSTEMUP
Upg_Installed	SYSTEMUP	SYSTEMUP
Checked	SYSTEMUP	SYSTEMUP
Setup[1]	SYSTEMUP|SINGLE-USER	SYSTEMUP|SRM
Installed	SYSTEMUP	SRM
Post_Installed	SYSTEMUP	SRM
Members_Added	SYSTEMUP	SRM
Members_Booted	SYSTEMUP	SYSTEMUP

[1]If the lead node is at SINGLE-USER, then the other nodes must be at SRM

Using Table 11–1, if you were performing a Shortcut Upgrade, and the current upgrade state of your failed cluster is `Setup`, you should ensure that all members of that cluster are up and running before trying to re-issue the `sra upgrade` command.

Similarly, if you were performing a Full Upgrade and the current upgrade state of your failed cluster is `Installed,` you should ensure that the lead nodes of each cluster are up and running and that the non-lead nodes are down at SRM.

11.21.4 Problem with Dependency on First Cluster

In a system with multiple clusters, there is a dependency during upgrade that the first cluster is available. This is particularly the case in a Full Upgrade, when you need to RIS-boot cluster members. Due to the current design of the `/etc/bootptab` file, there is a dependency on the first cluster to act as a gateway.

This is particularly evident if using a clustered management server.

If you are having difficulty upgrading the first cluster, or making it available during upgrade, you can edit the `/etc/bootptab` file on the first cluster and change the gateway settings to point to the lead nodes of that cluster.

For example, currently the `atlas32` entry in `/etc/bootptab` is as follows:

```
atlas32:tc=.ris0.alpha:ht=ethernet:gw=10.128.0.1:ha=00508BDFAAAE:ip=10.128.0.33:
```

You need to change the gateway setting to the IP of the cluster `atlasD1` to look like the following:

```
atlas32:tc=.ris0.alpha:ht=ethernet:gw=10.128.0.33:ha=00508BDFAAAE:ip=10.128.0.33:
```

11.21.5 Problems when clu_quorum does not Complete

In two paces during an upgrade, the `clu_quorum` command is issued on each cluster to change the number of votes a cluster member has. In some rare cases, this command may not complete for some reason and the upgrade will hang waiting for it to finish. If this happens, you will see the `clu_quorum` process running on the cluster in question.

If you can verify that the `clu_quorum` command has changed the vote successfully, then it is safe to kill the `clu_quorum` process (and associated logging processes). The upgrade should continue from that point.

11.21.6 Upgrade Backup: node failed with cfs_find_drv_handle panic

When backing up a system prior to upgrade, you might see a node panic with the following message:

```
panic (cpu 1): cfs_find_drv_handle: no dev on list
```

This is typically caused by the member's boot file domain being incorrectly set in the `/etc/fdmns` directory.

For information on how to correct this problem, please refer to Pre-Upgrade Audit (see Section 4.2 on page 4–8).

11.21.7 Upgrade Backup: node failed with cfs_issue_localroot_do_mount

When upgrading a domain to HP AlphaServer SC Version 2.6, all members except member 1 are deleted from each domain at the start of the upgrade process. All members are added back into the domain towards the end of the upgrade process.

However, if such a node is booted accidentally prior to the completion of the upgrade process (for example, if it is booted manually), then the node will panic during the boot sequence with the following message:

```
panic (cpu 0): cfs_issue_localroot_do_mount: name on boot partition mp failed
```

The panic is an indication that the node tried to join a cluster where it was no longer a member. As such, the panic itself should be ignored.

However, the cause of the member being inappropriately booted should be understood in case there is an underlying problem.

For more information on the upgrade process, please refer to Understanding the Upgrade Process (see Section 4.1 on page 4–2).

11.21.8 Restoring from Backup Can Sometimes Fail

When restoring a domain using the `sra_cluster_backup` utility as described in Section 4.8.3, you may see the following error messages:

```
# /usr/opt/sra/bin/sra_cluster_backup -disk dsk8 restore
sc_cluster_backup#cluster_root DOES NOT EXIST!
sc_cluster_backup#cluster_usr DOES NOT EXIST!
sc_cluster_backup#cluster_var DOES NOT EXIST!
sc_cluster_backup#boot_partitions DOES NOT EXIST!
```

The possible causes are as follows:

- Incorrect special device number for the backup disk
- Persistent reservations in the HSG for the backup disk

The solution to each possible cause is described below.

11.21.8.1 Incorrect Special Device Number for the Backup Disk

In order to restore a domain from backup when an upgrade fails with a severe error, the lead member will be booted from the UNIX disk.

When the domain was being backed up, the backup process itself will have created a directory `/etc/fdmns/sc_cluster_backup` on the root partition of the UNIX disk. Within this directory, a symbolic link will have been created to the special device file of the backup disk, for example, `/dev/disk/dsk5c`.

However the special device name assigned within the domain might be different to the special device name assigned to the same disk when the lead member is booted from the UNIX disk.

To solve this issue, first confirm the actual special device name for the backup disk using the following command when booted from the UNIX disk:

```
# hwmgr -v d
```

Once the actual special device is known, then you can correct the special device for the `sc_cluster_backup` file domain using the following commands:

```
# cd /etc/fdmns/sc_cluster_backup
# unlink dsk8c
# ln -s /dev/disk/dsk5c
```

Where:

- the partition used for the backups is always the 'c' partition
- dsk8c is the special device name assigned within the domain
- dsk5c is the special device name assigned to the same disk when booted from the UNIX disk

Once the `sc_cluster_backup` file domain is corrected, you can proceed with the restore operation as described in Section 4.8.3.

11.21.8.2 Persistent Reservations in the HSG for the backup disk

The explanation is that the HSG controllers create "reserves" on the disks belonging to a domain when the domain is created, that is, a locking mechanism that allows access to the HSG disks from a particular domain only.

This issue is described in more detail in Problem with HSG Devices in Installation Process (see Section 11.20 on page 11–20).

To clear these reserves so that the disks are accessible again, run the following command while the lead member of the domain is booted from the UNIX disk.

```
# /usr/sbin/cleanPR clean
```

To show any existing reserves, before cleaning them, and to check that the script has run properly, run the command:

```
# /usr/sbin/cleanPR show
```

Once the reservations are cleaned, you can proceed with the restore operation as described in Section 4.8.3.

11.22 Increasing the Number of ptys

When a management server is being built, then the `sra setup` phase will automatically increase the default number of ptys to a level suited to the number of nodes in the system.

For the scenario of a clustered management server, or for the scenario where further standalone management servers are being added to a system, then `sra setup` might not be rerun on each individual server. In such circumstances, then the default number of ptys will be 255 and during normal maintenance on systems with large node counts, system administrators may find that certain sra commands issued from these servers will fail with the message:

```
<Failed:boot> Error: The system has no more ptys. Ask your system
administrator to create more.
```

In these cases, the solution is to increase the number of ptys manually in the pts stanza of the `sysconfigtab` file using the `sysconfigdb` command.

```
pts:
    nptys=1024
```

Table 11–2 should be used as a guide when manually adjusting the number of ptys:

Table 11–2 Manually Adjusting ptys

Node Range	nptys
0-127	256
128-255	512
256-383	768
384-511	1024
512-768	1280

For an example of how to change sysconfigtab values using the `sysconfigdb` command, please refer to Add sysconfigtab Parameters (see Section 6.1.11 on page 6–22).

11.23 Increasing Socket Listen Queue Limits

For systems with very large node counts (for example, 1024 nodes), then the default Socket Listen Queue Limits will need to be increased on the management server.

Failing to increase the number of sockets may cause delays when configuring in nodes and starting the partitions.

Increasing Socket Listen Queue Limits

The limits can be reconfigured dynamically using the command below, once satisfied with the new values, and then the socket stanza in the `/etc/sysconfigtab` file should be updated with the new values using the `sysconfigdb` command.

```
atlasms# /sbin/sysconfig -r socket somaxconn=65535
atlasms# /sbin/sysconfig -r socket sominconn=65535
```

For more information on tuning please refer to the Tru64 System Tuning Guide.

A

Installation Overview and Checklist: When the System Has a Management Server

This appendix provides the following information to help you to install a system that has a management server:

- Installation Overview (page A-2)

A.1 Installation Overview

Table A–1 provides an overview of the installation process for a system that has a management server.

Table A–1 Installation Process: When the System Has a Management Server

Perform This Installation Task...	On...	Scope of Task
Set Up the Management Server:		
1. Set the Console Variables	Mgt server	Mgt server
2. Check the System Firmware	Mgt server	Mgt server
3. Install the Tru64 UNIX Operating System	Mgt server	Mgt server
4. Customize the System Configuration	Mgt server	Mgt server
5. Install the Operating System Patch Software	Mgt server	Mgt server
6. Install and Configure the Clustered Management Server	Mgt server	Mgt server
7. Configure the RIS Server	Mgt server	Mgt server
8. Install the HP AlphaServer SC System Software	Mgt server	Mgt server
9. Install the HP Fortran Run-Time Libraries	Mgt server	Mgt server
10. Install Layered Products (Optional)	Mgt server	Mgt server
11. Install the SANworks Storage System Scripting Utility	Mgt server	Mgt server
12. Define the RMS Master Node (rmshost)	Mgt server	Mgt server
13. Build the New Kernel and Reboot	Mgt server	Mgt server
Set Up the SC Database		
14. Set Up the SC Database	Mgt server	Mgt server
Check All Nodes in the HP AlphaServer SC System:		
15. Check the State of the Nodes	Mgt server	All Nodes
16. Check the System Firmware	Mgt server	All Nodes
Configure and Diagnose the HP AlphaServer SC Interconnect		
17. Upgrading the HP AlphaServer SC Interconnect Control Processor Software	Mgt server	Mgt server
18. Creating an Interconnect Configuration Using SC Viewer	Mgt server	Mgt server
19. Confirming the Operation of the HP AlphaServer SC Interconnect	Mgt server	Mgt server
Set Up the SC Monitor System		
20. Add a SAN Appliance as Monitored Devices	Mgt server	Mgt server

Table A–1 Installation Process: When the System Has a Management Server

Perform This Installation Task...	On...	Scope of Task
21. Change Terminal Servers Monitoring Distribution	Mgt server	Mgt server
22. Change Extreme Switches Monitoring Distribution	Mgt server	Mgt server
23. Activate the Changes	Mgt server	Mgt server
Assign Cabinets in the SC Database		
24. Load the Physical Relationships	Mgt server	Mgt server
25. Populate Cabinets with Nodes	Mgt server	Mgt server
26. Populate Cabinets with Other Hardware	Mgt server	Mgt server
Building the Domains:		
27. Review the SC Database System Settings	Mgt server First node of each domain	Systemwide
28. Add sysconfigtab Parameters	Mgt server First node of each domain	Systemwide
29. Create the Domains	Mgt server First node of each domain	Systemwide
30. Boot the System	Mgt server First node of each domain	Systemwide
31. Complete the Setup of the Domains	Mgt server	Systemwide
Completing the Installation:		
32. Configure the External Network Interfaces	*Specified nodes*	*Specified nodes*
33. Improve Cluster Availability	*Specified nodes*	*Specified nodes*
34. Load File System Configuration Data in the SC Database	Mgt server	Systemwide
35. Initial Setup of Monitoring for HSG80 RAID Systems	Mgt server	Systemwide
36. Configure the RMS Database	Mgt server	Systemwide
37. Provide RMS with CAA Failover Capability	Mgt server and Node 0	Systemwide
38. Enable CMF as a CAA Application	Mgt server and Node 0	Systemwide
39. Run the Example MPI Program	*Any node*	*Specified nodes*

Table A–1 Installation Process: When the System Has a Management Server

Perform This Installation Task...	On...	Scope of Task
40. Verify the HP AlphaServer SC Interconnect	Mgt server	Systemwide
41. Configure LSM	First three nodes of each domain	First three nodes of each domain
42. Verify Swap Mode	N/A	N/A
43. Add a Second Rail to an HP AlphaServer SC System after Domain Creation	Mgt server	Systemwide

B

Installation Overview and Checklist: When the System Does Not Have a Management Server

This appendix provides the following information to help you to install a system that does not have a management server:

- Installation Overview (page B-2)

B.1 Installation Overview

Table B–1 provides an overview of the installation process for a system that does not have a management server.

Table B–1 Installation Process: When the System Does Not Have a Management Server

Perform This Installation Task...	On...	Scope of Task
Set Up Node 0:		
1. Set the Console Variables	Node 0	Node 0
2. Check the System Firmware	Node 0	Node 0
3. Install the Tru64 UNIX Operating System	Node 0	Node 0
4. Customize the System Configuration	Node 0	Node 0
5. Install the Latest Operating System Patch Software	Node 0	Node 0
6. Configure the RIS Server	Node 0	Node 0
7. Install the HP AlphaServer SC System Software	Node 0	Node 0
8. Install the HP Fortran Run-Time Libraries	Node 0	Node 0
9. Install Layered Products (Optional)	Node 0	Node 0
10. Install the SANworks Storage System Scripting Utility	Node 0	Node 0
11. Add sysconfigtab Parameters	Node 0	Node 0
12. Define the RMS Master Node (rmshost)	Node 0	Systemwide
Set Up the SC Database:		
13. Set Up the SC Database	Node 0	Node 0[1]
Check All Nodes in the HP AlphaServer SC System, Except Node 0:		
14. Check the State of the Nodes	Node 0	All remaining nodes
15. Check the System Firmware	Node 0	All remaining nodes
Configure and Diagnose the HP AlphaServer SC Interconnect		
16. Upgrading the HP AlphaServer SC Interconnect Control Processor Software	Node 0	Node 0
17. Creating an Interconnect Configuration Using SC Viewer	Node 0	Node 0
18. Confirming the Operation of the HP AlphaServer SC Interconnect	Node 0	Node 0
Set Up the SC Monitor System		
19. Add a SAN Appliance as Monitored Devices	Node 0	Node 0
20. Change Terminal Servers Monitoring Distribution	Node 0	Node 0
21. Change Extreme Switches Monitoring Distribution	Node 0	Node 0
22. Activate the Changes	Node 0	Node 0

Table B–1 Installation Process: When the System Does Not Have a Management Server

Perform This Installation Task...	On...	Scope of Task
Assign Cabinets in the SC Database		
23. Load the Physical Relationships	Node 0	Node 0
24. Populate Cabinets with Nodes	Node 0	Node 0
25. Populate Cabinets with Other Hardware	Node 0	Node 0
Review the SC Database Settings:		
26. Review the SC Database Disk Settings	Node 0	Node 0
Transform Node 0 into a Single Node Domain:		
27. Transform Node 0 into a Single Node Domain	Node 0	Node 0
28. Run the HP AlphaServer SC Interconnect Tests on Node 0	Node 0	Node 0
Building the Domains:		
29. Review the SC Database System Settings	Node 0	Systemwide
30. Add sysconfigtab Parameters	Node 0	Systemwide
31. Create the Domains	Node 0	Systemwide
32. Boot the System	Node 0	Systemwide
33. Complete the Setup of the Domains	Node 0	Systemwide
Completing the Installation:		
34. Configure the External Network Interfaces	*Specified nodes*	*Specified nodes*
35. Improve Cluster Availability	*Specified nodes*	*Specified nodes*
36. Load File System Configuration Data in the SC Database	Node 0	Systemwide
37. Initial Setup of Monitoring for HSG80 RAID Systems	Node 0	Systemwide
38. Configure the RMS Database	Node 0	Systemwide
39. Provide RMS with CAA Failover Capability	Node 0	Systemwide
40. Enable CMF as a CAA Application	Node 0	Systemwide
41. Run the Example MPI Program	*Any node*	*Specified nodes*
42. Verify the HP AlphaServer SC Interconnect	Node 0	Systemwide
43. Configure LSM	First three nodes of each domain	First three nodes of each domain
44. Verify Swap Mode	N/A	N/A
45. Add a Second Rail to an HP AlphaServer SC System after Domain Creation	Node 0	Systemwide

[1]The `rmshost` alias is manually defined on Node 0 and automatically propagated to each domain.

C

Checklist: Adding a Management Server to a Cluster

Use this checklist to ensure that you complete all installation tasks in the correct order, when adding a management server after cluster creation:

Table C–1 Installation Checklist

Installation Task	Page	Task Complete?
Pre-Installation Planning:		
1. Review the Release Notes	2–2	
2. Assign the External Network IP Addresses	2–2	
3. Assign the System Name and Default Cluster Aliases	2–2	
4. Plan the Local and Global Storage	2–7	
5. Choose the Root Password	2–17	
6. Record the External Gateway IP Address	2–17	
Physical Installation:		
7. Connect the Management Network	3–11	
8. Populate the HP AlphaServer SC PCI Slots	3–17	
9. Configure Hardware for a Dual-Rail Configuration	3–20	
10. Connect the HP AlphaServer SC Interconnect	3–20	
11. Connect the Node Console Port	3–21	
12. Configure the HP AlphaServer SC Interconnect Control Card with an IP Address	3–22	
13. Configure the Terminal Servers with an IP Address	3–22	
14. Connect the Fibre Channel Switches	3–23	
15. Configure the System Storage on the HSG80	3–27	
16. Edit the Configuration Script	3–52	
Set Up the Management Server:		
17. Set the Console Variables	5–3	
18. Check the System Firmware	5–4	

Table C–1 Installation Checklist

Installation Task	Page	Task Complete?
19. Install the Tru64 UNIX Operating System	5–6	
20. Register Licenses (PAKs)	5–10	
21. Set Up Networks	5–14	
22. Configure DNS (BIND)	5–17	
23. Configure NTP	5–18	
24. Configure NFS	5–18	
25. Configure NIS	5–19	
26. Configure Mail	5–21	
27. Configure Printers	5–21	
28. Install the Operating System Patch Software	5–22	
29. Install and Configure the Clustered Management Server	5–22	
30. Install the HP AlphaServer SC System Software	5–32	
31. Install the HP Fortran Run-Time Libraries	5–33	
32. Install Layered Products (Optional)	5–33	
33. Disable RIS on Node 0	C–6	
34. Build the New Kernel and Reboot	5–35	
35. Update SRA	C–3	
36. Check the System Firmware	5–45	
37. Set Up RMS Partitions	8–10	

C.1 Update SRA

Follows these steps to move the SC database from the existing node (usually Node 0) to the management server, update the `/etc/hosts` file, and configure RIS:

1. On a system without a management server, the `cmf` host is normally Node 0. Identify the `cmf` host, as follows:
   `# sra dbget cmf.host`
2. Stop the console logger (`cmf`) on the `cmf` host, as follows:
   `atlas0# /sbin/init.d/cmf stop`
3. Move the RMS database from `atlas0` to `atlasms` using the instructions provided in Section , You are now ready to upgrade the management server, as described in Section 4.4.2. (page 4-10).
4. On the management server, edit the SC database to enter the MAC address for Node 0. This value was not entered earlier by the `sra setup` command (see Section 6.2, step 22 on page 6–30), because Node 0 was not then at the SRM prompt. To enter the MAC address for Node 0, run the `sra edit` command, as shown below:

```
atlasms# sra edit
sra> node
node> edit atlas0
 Id      Description                                    Value
 ----------------------------------------------------------------
 ...
 [6  ] Cluster name                              atlasD0
 [7  ] Hardware address (MAC)                    #
 [8  ] Number of votes                           1
 ...
 # = no default value exists
 ----------------------------------------------------------------

Select attributes to edit, q to quit
eg. 1-5 10 15

edit? 7

enter a new value, probe or auto
auto  = generate value from system
probe = probe hardware for value

ip00:hardware address (MAC)             [] (set)
new value? probe

info Connected through cmf
info Connected through cmf

ip00:hardware address (MAC)             [00-00-F8-1B-2E-BA] (probed)

correct? [y|n] y

Remote Installation Services (ris) should be updated
Update ris ? n
```

```
node> quit
sra>
```

5. On the management server, update the `/etc/hosts` file and configure RIS by running the `sra edit` command, as shown below.

Note:

You must use the `sra edit` command — the `sra setup` command will not update the `cmf` host when this value is already set in the database.

The management server is already at the `sra>` prompt. Enter the following commands:

```
sra> sys
sys> edit system


Id   Description                                            Value
----------------------------------------------------------------------
...
[8  ] Node running console logging daemon (cmfd)       atlas0
...
[28 ] Management Server name                          atlas0
...
----------------------------------------------------------------------


Select attributes to edit, q to quit
eg. 1-5 10 15

edit? 8 28
Node running console logging daemon (cmfd) [atlas0]
new value? atlasms
Management Server name                  [atlas0]
new value? atlasms

Node running console logging daemon (cmfd) [atlasms]
Management Server name                  [atlasms]
correct? [y|n] y

You have modified fields which effect the console logging
system. The SC database will be updated. In addition you
may chose to update (ping) the daemons to reload from
the modified database, or restart the daemons.

Modify SC database only (1), update daemons (2), restart daemons (3) [3]:3
Finished adding nodes to CMF table
Finished updating nodes in CMF table
CMF reconfigure: success
sys>  update hosts
Updating /etc/hosts...
sys> update ris all
Gateway for subnet 10 is 10.128.101.1
```

```
Setup RIS for host atlas0
.
.
Setup RIS for host atlas1023
sys> quit
sra> quit
#
```

6. Add an entry to the RMS database for the management server, as follows:
   `# rcontrol create node name=atlasms`
7. Start the RMS daemons on the management server, as follows:
   `atlasms# /sbin/init.d/rms start`
8. If you have changed the factory default password (that is, `system`) for the terminal server(s), perform the following steps (where `atlas-tc1` is an example terminal server name):
   a. Connect to the terminal server, as follows:
      `# sra -c atlas-tc1`
   b. Change the terminal server password to the factory default password, as follows:

```
# access
Network Access SW V2.4 BL50 for DS732
(c) Copyright 2000, Digital Networks - All Rights Reserved
Please type HELP if you need assistance
Enter username> system
Local> set priv
Password> site_specific_password[1]
Local> change server privileged password
Password> system[1]
Verification> system[1]
Local>
```

   c. Run the `sra ds_passwd` command to change the terminal server password back to the site-specific value, as follows:

```
# sra ds_passwd -server atlas-tc1
This command will set the password on the named
terminal server (atlas-tc1).
Confirm change password for server atlas-tc1 [yes]:
Enter new password for atlas-tc1: site_specific_password[1]
Please re-enter new password for atlas-tc1: site_specific_password[1]
Info: connecting to terminal server atlas-tc1 (10.128.100.1)
Info:    Connected through cmf
```

      This command sets the password on the terminal server, and updates the entry in the SC database.

---

1. The value that you enter is not echoed on screen.

9. The value of SC_MS in /etc/rc.config.common needs to be changed on the management server and on all clusters as follows:
```
atlasms# rcmgr -c set SC_MS atlasms
atlasms# sra command -domains all -m 1 -command "rcmgr -c set SC_MS
  atlasms"
```
10. In order for the HP AlphaServer SC system management daemons on the cluster nodes to correctly recognise and sign on with the new management server, it is advisable to shutdown and reboot the cluster nodes at this point.

C.2 Disable RIS on Node 0

When adding a management server to an HP AlphaServer SC system, you typically configure the management server as the RIS server for the system. However, Node 0 was previously configured as the RIS server. You should remove this functionality from Node 0 before you configure the management server as the RIS server, as described in this section.

To disable RIS, some tasks are mandatory and others are optional.

C.2.1 Mandatory Tasks

You must perform the following tasks — on any node in the first domain:

1. In the `/etc/rc.config.common` file, change the setting of the `JOIND` entry from `"yes"` to `"no"`:
   Before: `JOIND="yes"`
   After: `JOIND="no"`
2. Stop the `joind` daemon, as follows:
```
# /sbin/init.d/dhcp stop
```

C.2.2 Optional Tasks

You may also choose to remove the Tru64 UNIX software product from the RIS environment on Node 0 — this is an optional task. To do this, perform the following steps:

1. Start RIS on Node 0, as follows:
```
# ris
```
2. Choose the *DELETE software products* option by entering **d** at the prompt.
3. Enter the product number that represents the product to be removed; typically, the product number for Tru64 UNIX is **1**.
4. When prompted to remove all clients associated with the product, enter **yes**.

C.3 Stopping the RMS System and mSQL

To stop the RMS system, perform the following steps:

1. Ensure that there are no allocated resources. One way to do this is to stop each partition using the `kill` option, as shown in the following example:
   ```
   # rcontrol stop partition=big option kill
   ```
2. **Note:**

   If the `rms` CAA application has not been enabled, skip this step.

   If the `rms` CAA application has been enabled and is running, stop the `rms` application.

   You can determine the current status of the `rms` application by running the `caa_stat` command on the first domain in the system (that is, `atlasD0`, where `atlas` is an example system name) as follows:
   ```
   # caa_stat SC20rms
   ```
   To stop the `rms` application, use the `caa_stop` command, as follows:
   ```
   # caa_stop SC20rms
   ```
3. Stop the RMS daemons on every node, by running the following command once on any node:
   ```
   # rmsctl stop
   ```
   Note:

   If the `rms` CAA application has been enabled and you did not stop the `rms` application as described in step 2, then you will not be able to stop the RMS daemons in this step — CAA will automatically restart RMS daemons on the node where the `rms` application was last located.

4. Stop the `mSQL` daemon in one of the following ways, depending on whether you have registered `msql` as a CAA service:
   - Case 1: `msql` is registered with CAA

     If the `msql` CAA application has been enabled and is running, stop the `msql` application.

     You can determine the current status of the `msql` application by running the `caa_stat` command on the first domain in the system (that is, `atlasD0`, where `atlas` is an example system name), as follows:
     ```
     # caa_stat SC05msql
     ```

To stop the msql application, use the caa_stop command, as follows:
```
# caa_stop SC05msql
```

- Case 2: msql is not registered with CAA

  If the msql CAA application has not been enabled, stop the mSQL daemon by running the following command on the RMS master node (rmshost — usually Node 0):
  ```
  # /sbin/init.d/msqld stop
  ```

This process stops the RMS system.

At this stage, any attempt to use an RMS command will result in an error similar to the following:
```
rinfo: Warning: Can't connect to mSQL server on rmshost: retrying ...
```

This is because the mSQL daemon was stopped in step 4 above. If you skip step 4 (so that the mSQL daemon is running, but RMS daemons are stopped), you will be able to access the database but unable to execute commands that require the RMS daemons. Different commands need different RMS daemons, so the resulting error messages will differ. A typical message is similar to the following:
```
rcontrol: Warning: RMS server pmanager-parallel (rmshost) not responding
```

Note:

If you did not perform step 1 above, this process will not stop any jobs that are running when the RMS system is stopped.

C.3.1 Manually Starting RMS

If you stopped RMS as described in Section C.3 on page –7, you can restart RMS by performing the following steps:

1. Start the mSQL daemon in one of the following ways, depending on whether you have registered msql as a CAA service:

   - Case 1: msql is registered with CAA

     If the msql CAA application has been enabled and is stopped, start the msql application.

     You can determine the current status of the msql application by running the caa_stat command on the first domain in the system (that is, atlasD0, where atlas is an example system name) as follows:
     ```
     # caa_stat SC05msql
     ```

     To start the msql application, use the caa_start command as follows:
     ```
     # caa_start SC05msql
     ```

- Case 2: msql is not registered with CAA

  If the msql CAA application has not been enabled, start the mSQL daemon by running the following command on the RMS master node (rmshost — usually Node 0):
  ```
  # /sbin/init.d/msqld start
  ```

2. **Note:**

   If the rms CAA application has not been enabled, skip this step.

   If the rms CAA application has been enabled and is stopped, start the rms application.

   You can determine the current status of the rms application by running the caa_stat command on the first domain in the system (that is, atlasD0, where atlas is an example system name) as follows:
   ```
   # caa_stat SC20rms
   ```

   To start the rms application, use the caa_start command as follows:
   ```
   # caa_start SC20rms
   ```

3. Start the RMS daemons on the remaining nodes, by running the following command once on any node:
   ```
   # rmsctl start
   ```

For more information about RMS, see Chapter 5 of the *HP AlphaServer SC System Administration Guide*.

D

Information Checklists

Table D–1 Summit Switch and Terminal Server Port Numbers

Attribute	S1[1]	S2[1]	T/Server[1]	Page
Port Number of Summit switch port connected to the terminal server			n/a	3–12
Port Number of the Summit switch port connected to the Fibre Channel switch			n/a	3–12
Port Number of the Summit switch port connected to the AlphaServer SC Interconnect Control Processor				3–12
Port Number of terminal server port connected to the management server	n/a	n/a		3–21

[1]S1 = first Summit switch; S2 = second Summit switch, and so on; T/Server = terminal server

Table D–2 Tru64 UNIX System Attributes

Attribute	MS[1]	Domains				Page
		D0	D1	D2	D3	
AlphaServer SC system name (for example, `atlas`)						2–3
Host name						5–7 / 6–5
Host name IP address						5–14 / 6–12
External gateway						5–14 / 6–12
Tru64 UNIX `/`, `/usr`, and `/var` device from console (for example, `dka200`)						2–8
Tru64 UNIX `/` partition (for example, `dsk2a`)						5–8 / 6–6
Tru64 UNIX `/usr` partition (for example, `dsk2g`)						5–8 / 6–6
Tru64 UNIX `/var` partition (for example, `dsk2h`)						5–8 / 6–6

[1]MS = Management Server

Table D–3 Domain Attributes

Attribute		Domains D0	D1	D2	D3	Page
Number of nodes						5–37 / 6–25
Hardware type of the system (for example, ES40)						5–37 / 6–25
Number of domains						5–37 / 6–25
First node of this domain						5–37 / 6–25
domain name						2–4, 5–37 / 6–25
Default cluster alias IP address						2–4, 5–37 / 6–25
Terminal server model (for example, terminal server)						5–37 / 6–25
Number of ports on the terminal server						5–37 / 6–25
Terminal server IP address (first terminal server)						5–37 / 6–25
First port on terminal server						5–37 / 6–25
Domain /, /usr, and /var device from console (for example, DKC101)	primary:					6–43
	backup:					
Domain / partition (for example, dsk3b)	primary:					6–42
	backup:					
Domain /usr partition (for example, dsk3g)	primary:					6–42
	backup:					
Domain /var partition (for example, dsk3h)	primary:					6–42
	backup:					
Domain / disk size (percentage of total size)	primary:					6–42
	backup:					
Domain /usr disk size (percentage of total)	primary:					6–42
	backup:					
Domain /var disk size (percentage of total)	primary:					6–42
	backup:					
Generic boot disk (for example, dsk4)						6–30

Table D–4 Member Attributes of Domain D0

Attribute	Node 0: Member 1	Node 1: Member 2	Node 2: Member 3	Node *n*: Member <*n*+1>
Member host name[1]	atlas0	atlas1	atlas2	atlas*n*
Host name IP address [1]	10.128.0.1	10.128.0.2	10.128.0.3	10.128.0.<*n*+1>
Member ID [2] (memberid: 1–32)	1	2	3	n+1
Number of votes assigned to this member	1	1	1	0
Boot disk [3] (for example, dsk0)	dsk0	dsk6	dsk8	dsk<2m+2>
Boot device from console (for example, dka0)	dka0	dka0	dka0	dka0
Cluster interconnect IP name [4]	atlas0-ics0	atlas1-ics0	atlas2-ics0	atlas*n*-ics0
Cluster interconnect IP address [4]	10.0.0.1	10.0.0.2	10.0.0.3	10.0.0.<*n*+1>
System interconnect IP name [5]	atlas0-eip0	atlas1-eip0	atlas2-eip0	atlas*n*-eip0
System interconnect IP address [6]	10.64.0.1	10.64.0.2	10.64.0.3	10.64.0.<*n*+1>
External Network IP name [6]	atlas0-ext1	atlas1-ext1	atlas2-ext1	atlas*n*-ext1
External Network IP address	site-dependent	site-dependent	site-dependent	site-dependent
External Network subnet mask	site-dependent	site-dependent	site-dependent	site-dependent

[1]The first member inherits its host name and IP address from the Tru64 UNIX operating system.

[2]The default member ID for the first member is 1, and increments by 1 for each additional member.

[3]This naming convention is based on the configuration described in this guide: 3 local disks on the first node, 4 disks shared on the RAID subsystem, and 2 local disks on all other nodes.

[4]By default, the installation programs offer IP addresses on the 10.0 subnet, with the host portion of the address set to the member ID and the IP name set to the member's host name followed by -ics0.

[5]By default, the installation programs offer IP addresses on the 10.64 subnet, with the host portion of the address set to the member ID and the IP name set to the member's host name followed by -eip0.

[6]The suffix is ext1 for the first external network, ext2 for the second, and so on.

Table D–5 Member Attributes of Domain D1

Attribute	Node 32: Member 1	Node 33: Member 2	Node 34: Member 3	Node *n*: Member *m*
Member host name[1]	atlas32	atlas33	atlas34	atlas*n*
Host name IP address [1]	10.128.0.33	10.128.0.34	10.128.0.35	10.128.0.<*n*+1>
Member ID [2] (memberid: 1–32)	1	2	3	m
Number of votes assigned to this member	1	1	1	0
Boot disk [3] (for example, dsk0)	dsk0	dsk6	dsk8	dsk<2m+2>
Boot device from console (for example, dka0)	dka0	dka0	dka0	dka0
Cluster interconnect IP name [4]	atlas32-ics0	atlas33-ics0	atlas34-ics0	atlas*n*-ics0
Cluster interconnect IP address [4]	10.0.0.33	10.0.0.34	10.0.0.35	10.0.0.<*n*+1>
System interconnect IP name [5]	atlas32-eip0	atlas33-eip0	atlas34-eip0	atlas*n*-eip0
System interconnect IP address [6]	10.64.0.33	10.64.0.34	10.64.0.35	10.64.0.<*n*+1>
External Network IP name [6]	atlas32-ext1	atlas33-ext1	atlas34-ext1	atlas*n*-ext1
External Network IP address	site-dependent	site-dependent	site-dependent	site-dependent
External Network subnet mask	site-dependent	site-dependent	site-dependent	site-dependent

[1]The first member inherits its host name and IP address from the Tru64 UNIX operating system.

[2]The default member ID for the first member is 1, and increments by 1 for each additional member.

[3]This naming convention is based on the configuration described in this guide: 3 local disks on the first node, 4 disks shared on the RAID subsystem, and 2 local disks on all other nodes.

[4]By default, the installation programs offer IP addresses on the 10.0 subnet, with the host portion of the address set to the member ID and the IP name set to the member's host name followed by -ics0.

[5]By default, the installation programs offer IP addresses on the 10.64.0 subnet, with the host portion of the address set to the member ID and the IP name set to the member's host name followed by -eip0.

[6]The suffix is ext1 for the first external network, ext2 for the second, and so on.

Table D–6 Member Attributes of Domain D2

Attribute	Node 64: Member 1	Node 65: Member 2	Node 66: Member 3	Node *n*: Member *m*
Member host name[1]	atlas64	atlas65	atlas66	atlas*n*
Host name IP address [1]	10.128.0.65	10.128.0.66	10.128.0.67	10.128.0.<*n*+1>
Member ID [2] (memberid: 1–32)	1	2	3	m
Number of votes assigned to this member	1	1	1	0
Boot disk [3] (for example, dsk0)	dsk0	dsk6	dsk8	dsk<2m+2>
Boot device from console (for example, dka0)	dka0	dka0	dka0	dka0
Cluster interconnect IP name [4]	atlas64-ics0	atlas65-ics0	atlas66-ics0	atlas*n*-ics0
Cluster interconnect IP address [4]	10.0.0.65	10.0.0.66	10.0.0.67	10.0.0.<*n*+1>
System interconnect IP name [5]	atlas64-eip0	atlas65-eip0	atlas66-eip0	atlas*n*-eip0
System interconnect IP address [5]	10.64.0.65	10.64.0.66	10.64.0.67	10.64.0.<*n*+1>
External Network IP name [6]	atlas64-ext1	atlas65-ext1	atlas66-ext1	atlas*n*-ext1
External Network IP address	site-dependent	site-dependent	site-dependent	site-dependent
External Network subnet mask	site-dependent	site-dependent	site-dependent	site-dependent

[1]The first member inherits its host name and IP address from the Tru64 UNIX operating system.

[2]The default member ID for the first member is 1, and increments by 1 for each additional member.

[3]This naming convention is based on the configuration described in this guide: 3 local disks on the first node, 4 disks shared on the RAID subsystem, and 2 local disks on all other nodes.

[4]By default, the installation programs offer IP addresses on the 10.0 subnet, with the host portion of the address set to the member ID and the IP name set to the member's host name followed by -ics0.

[5]By default, the installation programs offer IP addresses on the 10.64 subnet, with the host portion of the address set to the member ID and the IP name set to the member's host name followed by -eip0.

[6]The suffix is ext1 for the first external network, ext2 for the second, and so on.

Table D–7 Member Attributes of Domain D32

Attribute	Node 992: Member 1	Node 993: Member 2	Node 994: Member 3	Node *n*: Member *m*
Member host name[1]	atlas992	atlas993	atlas994	atlas*n*
Host name IP address [1]	10.128.7.97	10.128.7.98	10.128.7.99	10.128.(*n*+1)/ 128.(*n*+1)%128
Member ID [2] (memberid: 1–32)	1	2	3	*m*
Number of votes assigned to this member	1	1	1	0
Boot disk [3] (for example, dsk0)	dsk0	dsk6	dsk8	dsk<2*m*+2>
Boot device from console (for example, dka0)	dka0	dka0	dka0	dka0
Cluster interconnect IP name [4]	atlas992-ics0	atlas993-ics0	atlas994-ics0	atlas*n*-ics0
Cluster interconnect IP address [4]	10.0.7.97	10.0.7.98	10.0.7.99	10.0.0.<*n*+1>
System interconnect IP name [5]	atlas992-eip0	atlas993-eip0	atlas994-eip0	atlas*n*-eip0
System interconnect IP address [4]	10.64.7.97	10.64.7.98	10.64.7.99	10.64.7.<*n*+1>
External Network IP name [6]	atlas992-ext1	atlas993-ext1	atlas994-ext1	atlas*n*-ext1
External Network IP address	site-dependent	site-dependent	site-dependent	site-dependent
External Network subnet mask	site-dependent	site-dependent	site-dependent	site-dependent

[1]The first member inherits its host name and IP address from the Tru64 UNIX operating system.

[2]The default member ID for the first member is 1, and increments by 1 for each additional member.

[3]This naming convention is based on the configuration described in this guide: 3 local disks on the first node, 4 disks shared on the RAID subsystem, and 2 local disks on all other nodes.

[4]By default, the installation programs offer IP addresses on the 10.0 subnet, with the host portion of the address set to the member ID and the IP name set to the member's host name followed by -ics0.

[5]By default, the installation programs offer IP addresses on the 10.64 subnet, with the host portion of the address set to the member ID and the IP name set to the member's host name followed by -eip0.

[6]The suffix is ext1 for the first external network, ext2 for the second, and so on.

E

Example Installation Output

This appendix provides samples of installation output from the following commands:

- sra setup (see Section E.1 on page E–2)
- clu_create (see Section E.2 on page E–20)
- clu_add_member (see Section E.3 on page E–23)
- clu_quorum (see Section E.4 on page E–25)
- upgrade_check (see Section E.5 on page E–27)

E.1 sra setup

This section provides the following example output:

- Sample sra setup Output When Using a Management Server (Example E–1 on page E–2)
- Sample sra setup Output When Not Using a Management Server (Example E–2 on page E–11)

Example E–1 Sample sra setup Output When Using a Management Server

```
atlasms# sra setup

We will need some configuration information in order to build the system.

The system name is used to derive both the cluster alias names
and the hostname of each node in the system.
For example, in a 64-node, 2-cluster system with system name
"atlas", the cluster aliases would be atlasD0 and atlasD1, while
the node hostnames would be atlas0, atlas1, ..., atlas63.

The system name length is limited to 10 characters.

However, a deprecated naming scheme is also available for cases
where the number of clusters is less than 27. Using this scheme
the clusters in the above example would be named atlasA and
atlasB.

Note: if the system has only one cluster, the cluster alias is
the same as the system name. In the above example the cluster
alias would be "atlas".

Enter the system name: atlas

Enter the number of nodes in the system: 1024

Domain names in the system typically start at 0, for example atlasD0.
Or when using the old naming scheme they would start at A, for example atlasA.
However, it is possible to start at a different number.
Enter the domain number (or letter) of the first domain in the system [0]: 0

Node names in the system typically start at 0, for example atlas0.
However, it is possible to start at a different number.
Enter the node number of the first node in the system [0]: 0

Is this system a Management Server? [yes]:Enter the name of the Management Server
[atlasms]: atlasms

We need to know the hardware type of the system
Supported hardware types are ES40, ES45 and DS20L
If your system is to contain clusters of mixed hardware type,
enter the type which composes the majority of the system.
```

```
Enter the hardware type [ES40]: ES45

We need to know the number of Cluster Interconnect Rails used
in the system. The supported number of rails is 1 or 2
Enter the number of Cluster Interconnect Rails [1]: 1

Building the SC database (-m atlas -N "atlas[0-1023]" -t ES45 -I atlasms)

Enter the number of clusters in the system [1]: 32

Do you wish to use the old alphabetic cluster naming scheme? [no]: no

The Internet protocol (IP) address associated with the Management Network
for each node in the cluster is determined by incrementing from the
first node (atlas0)
Enter the IP address for the node 0 Management Network [10.128.4.1]: 10.128.4.1

The address associated with the Compaq Alphaserver SC Cluster Interconnect
for each node in the system is determined by incrementing from the
first node (atlas0)
Enter the IP address for the node 0 Cluster Interconnect [10.0.0.1]: 10.0.0.1

The address associated with the Compaq Alphaserver SC System (Eip)
Interconnect for each node in the system is determined by incrementing
from the first node (atlas0)
Enter the IP address for the node 0 System Interconnect [10.64.0.1]: 10.64.0.1

If you know the model of the terminal server used to connect
the Console Network, enter it here. Otherwise just accept the default
or set it to "unknown"
Enter the terminal server model [DECserver900]: DECserver900

The IP address of each terminal server in the system
is determined by incrementing from that of the first
Enter the IP address for the first DECserver900 [10.128.100.1]: 10.128.100.1

In normal practice the terminal server ports are assigned
sequentially starting from 1 for node 0
Enter the first port on the DECserver900 (in the range 1-32) [1]: 1

The file /etc/clua_default needs to be populated. When populated,
This file allows the selection of a preferred network for routes
to Cluster Alias IP addresses. The contents of the /etc/clua_default
file affect how gated behaves. SRA has selected the Management LAN
as the network to provide a default route and the value 2
as the metric. If you wish to change his value use the SRA edit command.
If you change the metric value in the database you will also need to
change the value in /etc/clua_default file on each domain.

Enter the IP address for the Preferred Server cluster alias base address
[10.128.106.1]: 10.128.106.1
------------------------------------------------------------
System name                                         atlas
```

```
Number of nodes                                     1024
Domain number of first domain                       0
Node number of first node                           0
Management Server                                   atlasms
IP address for node 0 Management Network            10.128.0.1
IP address for node 0 Cluster Interconnect          10.0.0.1
IP address for node 0 System Interconnect           10.64.0.1
Terminal server model                               DECserver900
IP address for the first DECserver900               10.128.100.1
First port on the DECserver900                      1
Hardware type                                       ES45
Number of Cluster Interconnect Rails                1
Number of clusters                                  32
Cluster naming scheme                               Alphanumeric
Preferred server cluster alias base address         10.128.106.1
-------------------------------------------------------------

Is this correct? [yes]: yes
Setting up clusters

If you choose manual cluster configuration, then for each cluster
you will be asked to enter the external IP address for member 1,
the cluster alias IP address, the cluster type (file server or
compute server), and the start node.

If you choose automatic cluster configuration, the system will
assign default values for the cluster type. The IP addresses for
members 1 and 2 of each cluster, and the cluster aliases, will be
assigned in sequence starting with the base IPs which you enter.

Configurations where all clusters (except possibly the first and
last) are the same size can be automatically generated. Other
configurations must be manually entered.

Would you like to use automatic cluster configuration? [yes]: yes
Number of nodes in the first cluster [32]: 32
Number of nodes in subsequent clusters [32]: 32
Enter the External Network IP address for node 0 []: 16.209.133.30
Enter the IP for cluster 0 cluster alias []: 16.209.133.28

Cluster Start Cluster Alias  Member 1       Member 2       Cluster
Name    Node  IP Address     IP Address     IP Address     Type
-------------------------------------------------------------------------------
atlasD0  0    16.209.133.28  16.209.133.30  16.209.133.31  fs
atlasD1  32   16.209.133.29  16.209.133.32  16.209.133.33  cs
atlasD2  64   16.209.133.30  16.209.133.34  16.209.133.35  cs
atlasD3  96   16.209.133.31  16.209.133.36  16.209.133.37  cs
atlasD4  128  16.209.133.32  16.209.133.38  16.209.133.39  cs
atlasD5  160  16.209.133.33  16.209.133.40  16.209.133.41  cs
atlasD6  192  16.209.133.34  16.209.133.42  16.209.133.43  cs
atlasD7  224  16.209.133.35  16.209.133.44  16.209.133.45  cs
atlasD8  256  16.209.133.36  16.209.133.46  16.209.133.47  cs
atlasD9  288  16.209.133.37  16.209.133.48  16.209.133.49  cs
```

```
atlasD10 320  16.209.133.38  16.209.133.50  16.209.133.51  cs
atlasD11 352  16.209.133.39  16.209.133.52  16.209.133.53  cs
atlasD12 384  16.209.133.40  16.209.133.54  16.209.133.55  cs
atlasD13 416  16.209.133.41  16.209.133.56  16.209.133.57  cs
atlasD14 448  16.209.133.42  16.209.133.58  16.209.133.59  cs
atlasD15 480  16.209.133.43  16.209.133.60  16.209.133.61  cs
atlasD16 512  16.209.133.44  16.209.133.62  16.209.133.63  cs
atlasD17 544  16.209.133.45  16.209.133.64  16.209.133.65  cs
atlasD18 576  16.209.133.46  16.209.133.66  16.209.133.67  cs
atlasD19 608  16.209.133.47  16.209.133.68  16.209.133.69  cs
atlasD20 640  16.209.133.48  16.209.133.70  16.209.133.71  cs
atlasD21 672  16.209.133.49  16.209.133.72  16.209.133.73  cs
atlasD22 704  16.209.133.50  16.209.133.74  16.209.133.75  cs
atlasD23 736  16.209.133.51  16.209.133.76  16.209.133.77  cs
atlasD24 768  16.209.133.52  16.209.133.78  16.209.133.79  cs
atlasD25 800  16.209.133.53  16.209.133.80  16.209.133.81  cs
atlasD26 832  16.209.133.54  16.209.133.82  16.209.133.83  cs
atlasD27 864  16.209.133.55  16.209.133.84  16.209.133.85  cs
atlasD28 896  16.209.133.56  16.209.133.86  16.209.133.87  cs
atlasD29 928  16.209.133.57  16.209.133.88  16.209.133.89  cs
atlasD30 960  16.209.133.58  16.209.133.90  16.209.133.91  cs
atlasD31 992  16.209.133.59  16.209.133.92  16.209.133.93  cs

Is this correct? [yes]: yes

Adding nodes to the database
Finished adding nodes to database

Populating the SC Monitor database tables
add Extreme switch: extreme1/10.128.103.1
...etc...
add Extreme switch: extreme32/10.128.103.32

Configuring cfengine


Update /etc/hosts? [yes]:Updating /etc/hosts...
Info - No SRA section in /etc/hosts file

CMF is a utility used to monitor and connect
to the Console Network. It must be correctly configured
before the cluster setup can continue

Which host should run the CMF daemon (cmfd)? [atlasms]: atlasms
Finished adding nodes to CMF table
Finished updating nodes in CMF table
If the terminal servers have never been configured, cmf will fail.
Configure terminal servers? [yes]: no
The CMF host is set as atlasms in the database, but is not responding
Attempting to restart CMF on this node

Restarting the CMF daemon, wait...ok
Checking we can talk to the daemon...ok
```

```
The CMF daemon was sucessfully restarted on atlasms

Each member has its own boot disk, which has an associated
clusterized UNIX device name; for example dsk7
An alternate boot disk may be configured -- this is optional.

Would you like to configure an alternate boot disk? [yes]: yes

If you USE an alternate boot disk, the swap space from the
alternate boot disk is added to the swap space from the
primary boot disk, thus doubling the available swap space.
Also, the tmp and local partitions on the alternate boot
disk are mounted on /tmp1 and /local1 respectively.

Would you like to use the alternate boot disk? [yes]: yes
Setting up primary boot disk

We need to know the SRM device name for the primary boot disk
If you know the SRM device name (eg dka0) enter it now
otherwise accept the default

"probe" will probe a node at SRM for the device name

SRM device name for primary boot disk? [probe]: dka0
Settings for the primary boot disk:

-----------------------------------------------------------
UNIX device name                                  dsk0
SRM device name                                   dka0
swap partition size (%)                           15
tmp partition size (%)                            42
local partition size (%)                          43
-----------------------------------------------------------

Are these settings correct? [yes]: yes

Setting up secondary boot disk

We need to know the SRM device name for the secondary boot disk
If you know the SRM device name (eg dka100) enter it now
otherwise accept the default

"probe" will probe a node at SRM for the device name

SRM device name for secondary boot disk? [probe]: dka100
Settings for the secondary boot disk:

-----------------------------------------------------------
UNIX device name                                  dsk1
SRM device name                                   dka100
swap partition size (%)                           15
tmp partition size (%)                            42
local partition size (%)                          43
```

```
------------------------------------------------------------

Are these settings correct? [yes]: yes

Setting up Tru64 UNIX disk

We need to know the UNIX device name for the Tru64 UNIX disk
If you know the UNIX device name (eg dsk2) enter it now
otherwise accept the default

UNIX device name for the Tru64 UNIX disk? [dsk2]: dsk2
Settings for the Tru64 UNIX disk:

Id   Description                              Value
------------------------------------------------------------------
[0  ] Image Role                               unix
[1  ] Image name                               first
[2  ] UNIX device name                         dsk2
[3  ] SRM device name                          #
[4  ] Disk Location (Identifier)
[5  ] root partition size (%)                  10
[6  ] root partition                           a
[7  ] usr partition size (%)                   35
[8  ] usr partition                            g
[9  ] var partition size (%)                   35
[10 ] var partition                            h
[11 ] swap partition size (%)                  20
[12 ] swap partition                           b
------------------------------------------------------------------

Are these settings correct? [yes]: yes

Setting up Cluster /, /usr & /var disk

We need to know the UNIX device name for the Cluster /, /usr & /var disk
If you know the UNIX device name (eg dsk3) enter it now
otherwise accept the default

UNIX device name for the Cluster /, /usr & /var disk? [dsk3]: dsk3
Settings for the Cluster /, /usr & /var disk:

Id   Description                              Value
------------------------------------------------------------------
[0  ] Image Role                               cluster
[1  ] Image name                               first
[2  ] UNIX device name                         dsk3
[3  ] SRM device name                          #
[4  ] Disk Location (Identifier)               IDENTIFIER=1
[5  ] root partition size (%)                  5
[6  ] root partition                           b
[7  ] usr partition size (%)                   50
[8  ] usr partition                            g
[9  ] var partition size (%)                   45
```

```
[10 ] var partition                              h
---------------------------------------------------------------

Are these settings correct? [yes]: yes

Would you like to configure a backup cluster disk? [no]: yes
Setting up backup Cluster /, /usr & /var disk

We need to know the UNIX device name for the backup Cluster /, /usr & /var disk
If you know the UNIX device name (eg dsk5) enter it now
otherwise accept the default

UNIX device name for the backup Cluster /, /usr & /var disk? [dsk5]: dsk5
Settings for the backup Cluster /, /usr & /var disk:

Id   Description                                Value
---------------------------------------------------------------
[0  ] Image Role                                 cluster
[1  ] Image name                                 second
[2  ] UNIX device name                           dsk5
[3  ] SRM device name                            #
[4  ] Disk Location (Identifier)                 IDENTIFIER=3
[5  ] root partition size (%)                    5
[6  ] root partition                             b
[7  ] usr partition size (%)                     50
[8  ] usr partition                              g
[9  ] var partition size (%)                     45
[10 ] var partition                              h
---------------------------------------------------------------

Are these settings correct? [yes]: yes

Setting up Generic boot disk

We need to know the UNIX device name for the Generic boot disk
If you know the UNIX device name (eg dsk4) enter it now
otherwise accept the default

UNIX device name for the Generic boot disk? [dsk4]: dsk4
Settings for the Generic boot disk:

Id   Description                                Value
---------------------------------------------------------------
[0  ] Image Role                                 gen_boot
[1  ] Image name                                 first
[2  ] UNIX device name                           dsk4
[3  ] SRM device name                            #
[4  ] Disk Location (Identifier)                 IDENTIFIER=2
[5  ] default or not                             #
[6  ] swap partition size (%)                    30
[7  ] tmp partition size (%)                     35
[8  ] local partition size (%)                   35
---------------------------------------------------------------
```

```
Are these settings correct? [yes]: yes

We need to know the SRM device name for the Management LAN adapter
and the External LAN adapter.
If you know the SRM device name (eg eia0) enter it now
otherwise accept the default

"probe" will probe a node at SRM for the device name


SRM device name for Management LAN adapter? [eia0]: eia0
Please enter the UNIX device name for the Management LAN adapter,
eg "ee0". Accept the default if you are not sure

UNIX device name for Management LAN adapter? [ee0]: ee0
Settings for the Management LAN adapter

------------------------------------------------------------
UNIX device name                                ee0
SRM device name                                 eia0
------------------------------------------------------------

Are these settings correct? [yes]: yes

SRM device name for External LAN adapter? [eib0]: eib0
Please enter the UNIX device name for the External LAN adapter,
eg "ee1". Accept the default if you are not sure

UNIX device name for External LAN adapter? [ee1]: ee1
Settings for the External LAN adapter

------------------------------------------------------------
UNIX device name                                ee1
SRM device name                                 eib0
------------------------------------------------------------

Are these settings correct? [yes]: yes


We will now do a hardware probe in order to collect
the hardware ethernet address of each node.

Probe hardware? [yes]: yes
Nodes to probe [all]: all
Initialize node hardware during probe? [yes]: yes

Log file is /var/sra/sra.logd/sra.log.0

Display not loaded
02:38:46 atlas0      Phase: Initializing
02:59:09 atlas1023   status:success
```

```
* Summary * Success: atlas[0-1023]

All nodes were sucessfully probed

In order to add members to the cluster we need to
add nodes to the Remote Installation Services (RIS) database

Add nodes to the RIS database? [yes]: yes

Gateway for subnet 10 is 10.128.0.1
Setup RIS for host atlas0
Setting up tftp in inetd.conf...
JOIN Server Release 4.1.0b  for Compaq Tru64 UNIX
Copyright 1992-1998 Competitive Automation, Inc.  All Rights Reserved.

DHCP daemon started
Setup RIS for host atlas1
...etc...
Setup RIS for host atlas1023

In order for future Operating System upgrades to function correctly we need to
add domains to the Remote Installation Services (RIS) database.

Add domains to the RIS database? [yes]: yes

Gateway for subnet 10 is 10.128.0.1
DHCP daemon started
Setup RIS for domain atlasD0
...etc...
Setup RIS for domain atlasD31

Enabling consolidated binary.errlog on rmshost

If you need to make any changes to the database
use "sra edit"


To complete the installation, run "sra install" to install
the cluster

The following crontab entry will rotate cmf logs every two weeks:
"20 0 17,3 * * /sbin/init.d/cmf rotate"
Add entry to root crontab? [yes]: yes
The following crontab entry will archive and backup the rms database at 2:05 every
day:
"5 2 * * * /usr/bin/rmsbackup"
Add entry to root crontab? [yes]: yes
sra setup completed successfully.
----------------------------------------------------
#
```

Example E–2 Sample sra setup Output When Not Using a Management Server

```
atlas0# sra setup

We will need some configuration information in order to build the system.

The system name is used to derive both the cluster alias names
and the hostname of each node in the system.
For example, in a 64-node, 2-cluster system with system name
"atlas", the cluster aliases would be atlasD0 and atlasD1, while
the node hostnames would be atlas0, atlas1, ..., atlas63.

The system name length is limited to 10 characters.

However, a deprecated naming scheme is also available for cases
where the number of clusters is less than 27. Using this scheme
the clusters in the above example would be named atlasA and
atlasB.

Note: if the system has only one cluster, the cluster alias is
the same as the system name. In the above example the cluster
alias would be "atlas".

Enter the system name: atlas
Enter the number of nodes in the system: 1024

Domain names in the system typically start at 0, for example atlasD0.
Or when using the old naming scheme they would start at A, for example atlasA.
However, it is possible to start at a different number.
Enter the domain number (or letter) of the first domain in the system [0]: 0

Node names in the system typically start at 0, for example atlas0.
However, it is possible to start at a different number.
Enter the node number of the first node in the system [0]: 0

Is this system a Management Server? [yes]: no

We need to know the hardware type of the system
Supported hardware types are ES40, ES45 and DS20L
If your system is to contain clusters of mixed hardware type,
enter the type which composes the majority of the system.

Enter the hardware type [ES40]: ES45

We need to know the number of Cluster Interconnect Rails used
in the system. The supported number of rails is 1 or 2
Enter the number of Cluster Interconnect Rails [1]: 1

Building the SC database (-m atlas -N "atlas[0-3]" -t ES45 )

Enter the number of clusters in the system [1]: 32

Do you wish to use the old alphabetic cluster naming scheme? [no]: no
```

```
The Internet protocol (IP) address associated with the Management Network
for each node in the cluster is determined by incrementing from the
first node (atlas0)
Enter the IP address for the node 0 Management Network [10.128.0.1]: 10.128.0.1

The address associated with the Compaq Alphaserver SC Cluster Interconnect
for each node in the system is determined by incrementing from the
first node (atlas0)
Enter the IP address for the node 0 Cluster Interconnect [10.0.0.1]: 10.0.0.1

The address associated with the Compaq Alphaserver SC System (Eip)
Interconnect for each node in the system is determined by incrementing
from the first node (atlas0)
Enter the IP address for the node 0 System Interconnect [10.64.0.11]: 10.64.0.11

If you know the model of the terminal server used to connect
the Console Network, enter it here. Otherwise just accept the default
or set it to "unknown"
Enter the terminal server model [DECserver900]: DECserver900

The IP address of each terminal server in the system
is determined by incrementing from that of the first
Enter the IP address for the first DECserver900 [10.128.100.1]: 10.128.100.1

In normal practice the terminal server ports are assigned
sequentially starting from 1 for node 0
Enter the first port on the DECserver900 (in the range 1-32) [1]: 1

The file /etc/clua_default needs to be populated. When populated,
This file allows the selection of a preferred network for routes
to Cluster Alias IP addresses. The contents of the /etc/clua_default
file affect how gated behaves. SRA has selected the Management LAN
as the network to provide a default route and the value 2
as the metric. If you wish to change his value use the SRA edit command.
If you change the metric value in the database you will also need to
change the value in /etc/clua_default file on each domain.

Enter the IP address for the Preferred Server cluster alias base address
[10.128.106.1]: 10.128.106.1

------------------------------------------------------------
System name                                     atlas
Number of nodes                                 1024
Domain number of first domain                   0
Node number of first node                       0
Management Server
IP address for node 0 Management Network        10.128.0.1
IP address for node 0 Cluster Interconnect      10.0.0.1
IP address for node 0 System Interconnect       10.64.0.1
Terminal server model                           DECserver900
IP address for the first DECserver900           10.128.100.1
First port on the DECserver900                  1
```

```
Hardware type                                       ES45
Number of Cluster Interconnect Rails                1
Number of clusters                                  32
Cluster naming scheme                               Alphanumeric
Preferred server cluster alias base address         10.128.106.1
------------------------------------------------------------

Is this correct? [yes]: yes
Setting up clusters

If you choose manual cluster configuration, then for each cluster
you will be asked to enter the external IP address for member 1,
the cluster alias IP address, the cluster type (file server or
compute server), and the start node.

If you choose automatic cluster configuration, the system will
assign default values for the cluster type. The IP addresses for
members 1 and 2 of each cluster, and the cluster aliases, will be
assigned in sequence starting with the base IPs which you enter.

Configurations where all clusters (except possibly the first and
last) are the same size can be automatically generated. Other
configurations must be manually entered.

Would you like to use automatic cluster configuration? [yes]: no

Enter the first node in cluster atlasD0 [atlas0]: atlas0
Does node atlas0 have an External Network? [yes]: yes
Enter the External Network IP address for node atlas0 []: 10.196.3.137
Enter the IP address for cluster alias atlasD0 []: 16.196.1.137
Enter the Domain type for cluster atlasD0 [fs]: fs

Enter the first node in cluster atlasD1 [atlas32]: atlas32
...etc...
Enter the Domain type for cluster atlasD31 [cs]: cs

Adding nodes to the database
Adding node atlas0
...etc...
Adding node atlas1023

Populating the SC Monitor database tables
add Extreme switch: extreme1/10.128.103.1
...etc...
add Extreme switch: extreme32/10.128.103.32

Configuring cfengine

Update /etc/hosts? [yes]: yes
Updating /etc/hosts...
Info - No SRA section in /etc/hosts file

CMF is a utility used to monitor and connect
```

```
to the Console Network. It must be correctly configured
before the cluster setup can continue

Which host should run the CMF daemon (cmfd)? [atlas0]: atlas0

Adding node atlas0 to CMF table
...etc...
Adding node atlas1023 to CMF table

Finished updating nodes in CMF table
If the terminal servers have never been configured, cmf will fail.
Configure terminal servers? [yes]: yes

The CMF host is set as atlas0 in the database, but is not responding
Attempting to restart CMF on this node

Restarting the CMF daemon, wait...ok
Checking we can talk to the daemon...ok
The CMF daemon was sucessfully restarted on atlas0

Each member has its own boot disk, which has an associated
clusterized UNIX device name; for example dsk7
An alternate boot disk may be configured -- this is optional.

Would you like to configure an alternate boot disk? [yes]: yes
If you USE an alternate boot disk, the swap space from the
alternate boot disk is added to the swap space from the
primary boot disk, thus doubling the available swap space.
Also, the tmp and local partitions on the alternate boot
disk are mounted on /tmp1 and /local1 respectively.

Would you like to use the alternate boot disk? [yes]: yes
Setting up primary boot disk

We need to know the SRM device name for the primary boot disk
If you know the SRM device name (eg dka0) enter it now
otherwise accept the default

"probe" will probe a node at SRM for the device name

SRM device name for primary boot disk? [probe]: dka0
Settings for the primary boot disk:
------------------------------------------------------------
UNIX device name                              dsk0
SRM device name                               dka0
swap partition size (%)                       15
tmp partition size (%)                        42
local partition size (%)                      43
------------------------------------------------------------
Are these settings correct? [yes]: yes

Setting up secondary boot disk
```

```
We need to know the SRM device name for the secondary boot disk
If you know the SRM device name (eg dka100) enter it now
otherwise accept the default

"probe" will probe a node at SRM for the device name

SRM device name for secondary boot disk? [probe]: dka100
Settings for the secondary boot disk:
-----------------------------------------------------------------
UNIX device name                                    dsk1
SRM device name                                     dka100
swap partition size (%)                             15
tmp partition size (%)                              42
local partition size (%)                            43
-----------------------------------------------------------------
Are these settings correct? [yes]: yes

Setting up Tru64 UNIX disk

We need to know the UNIX device name for the Tru64 UNIX disk
If you know the UNIX device name (eg dsk2) enter it now
otherwise accept the default

UNIX device name for the Tru64 UNIX disk? [dsk2]: dsk2
Settings for the Tru64 UNIX disk:

Id   Description                                Value
-----------------------------------------------------------------
[0  ] Image Role                                 unix
[1  ] Image name                                 first
[2  ] UNIX device name                           dsk2
[3  ] SRM device name                            #
[4  ] Disk Location (Identifier)
[5  ] root partition size (%)                    10
[6  ] root partition                             a
[7  ] usr partition size (%)                     35
[8  ] usr partition                              g
[9  ] var partition size (%)                     35
[10 ] var partition                              h
[11 ] swap partition size (%)                    20
[12 ] swap partition                             b
-----------------------------------------------------------------

Are these settings correct? [yes]: yes

Setting up Cluster /, /usr & /var disk

We need to know the UNIX device name for the Cluster /, /usr & /var disk
If you know the UNIX device name (eg dsk3) enter it now
otherwise accept the default

UNIX device name for the Cluster /, /usr & /var disk? [dsk3]: dsk3
Settings for the Cluster /, /usr & /var disk:
```

```
Id   Description                                Value
-----------------------------------------------------------------
[0  ] Image Role                                cluster
[1  ] Image name                                first
[2  ] UNIX device name                          dsk3
[3  ] SRM device name                           #
[4  ] Disk Location (Identifier)                IDENTIFIER=1
[5  ] root partition size (%)                   5
[6  ] root partition                            b
[7  ] usr partition size (%)                    50
[8  ] usr partition                             g
[9  ] var partition size (%)                    45
[10 ] var partition                             h
-----------------------------------------------------------------

Are these settings correct? [yes]: yes

Would you like to configure a backup cluster disk? [no]: yes
Setting up backup Cluster /, /usr & /var disk

We need to know the UNIX device name for the backup Cluster /, /usr & /var disk
If you know the UNIX device name (eg dsk5) enter it now
otherwise accept the default

UNIX device name for the backup Cluster /, /usr & /var disk? [dsk5]: dsk5
Settings for the backup Cluster /, /usr & /var disk:

Id   Description                                Value
-----------------------------------------------------------------
[0  ] Image Role                                cluster
[1  ] Image name                                second
[2  ] UNIX device name                          dsk5
[3  ] SRM device name                           #
[4  ] Disk Location (Identifier)                IDENTIFIER=3
[5  ] root partition size (%)                   5
[6  ] root partition                            b
[7  ] usr partition size (%)                    50
[8  ] usr partition                             g
[9  ] var partition size (%)                    45
[10 ] var partition                             h
-----------------------------------------------------------------

Are these settings correct? [yes]: yes

Setting up Generic boot disk

We need to know the UNIX device name for the Generic boot disk
If you know the UNIX device name (eg dsk4) enter it now
otherwise accept the default

UNIX device name for the Generic boot disk? [dsk4]: dsk4
Settings for the Generic boot disk:
```

```
Id   Description                                Value
-----------------------------------------------------------------
[0  ] Image Role                                gen_boot
[1  ] Image name                                first
[2  ] UNIX device name                          dsk4
[3  ] SRM device name                           #
[4  ] Disk Location (Identifier)                IDENTIFIER=2
[5  ] default or not                            #
[6  ] swap partition size (%)                   30
[7  ] tmp partition size (%)                    35
[8  ] local partition size (%)                  35
-----------------------------------------------------------------

Are these settings correct? [yes]: yes

We need to know the SRM device name for the Management LAN adapter
and the External LAN adapter.
If you know the SRM device name (eg eia0) enter it now
otherwise accept the default

"probe" will probe a node at SRM for the device name

SRM device name for Management LAN adapter? [eia0]: eia0
Please enter the UNIX device name for the Management LAN adapter,
eg "ee0". Accept the default if you are not sure

UNIX device name for Management LAN adapter? [ee0]: ee0
Settings for the Management LAN adapter

-----------------------------------------------------------------
UNIX device name                                ee0
SRM device name                                 eia0
-----------------------------------------------------------------

Are these settings correct? [yes]:
SRM device name for External LAN adapter? [eib0]: eib0
Please enter the UNIX device name for the External LAN adapter,
eg "ee1". Accept the default if you are not sure

UNIX device name for External LAN adapter? [ee1]: ee1
Settings for the External LAN adapter

-----------------------------------------------------------------
UNIX device name                                ee1
SRM device name                                 eib0
-----------------------------------------------------------------

Are these settings correct? [yes]: yes

We will now do a hardware probe in order to collect
the hardware ethernet address of each node.
```

```
Probe hardware? [yes]: yes
Nodes to probe [all]: all
Initialize node hardware during probe? [yes]: yes
Log file is /var/sra/sra.logd/sra.log.0

Display not loaded
18:38:50 atlas1      Phase: Initializing
...etc...
18:59:13 atlas1023   status:success
* Summary * Success: atlas[1-1023]

All nodes were sucessfully probed

In order to add members to the cluster we need to
add nodes to the Remote Installation Services (RIS) database

Add nodes to the RIS database? [yes]: yes
Gateway for subnet 10 is 10.128.0.1
Setup RIS for host atlas1
Setting up tftp in inetd.conf...
JOIN Server Release 4.1.0b  for Compaq Tru64 UNIX
Copyright 1992-1998 Competitive Automation, Inc.  All Rights Reserved.

DHCP daemon started
Setup RIS for host atlas2
...
...
Setup RIS for host atlas1023

In order for future Operating System upgrades to function correctly we need to
add domains to the Remote Installation Services (RIS) database.

Add domains to the RIS database? [yes]: yes
Gateway for subnet 10 is 10.128.0.1
Setup RIS for domain atlasD0
...etc...
Setup RIS for domain atlasD31

Enabling consolidated binary.errlog on rmshost

If you need to make any changes to the database
use "sra edit"

To complete the installation, run "sra install" to install
the cluster

The following crontab entry will rotate cmf logs every two weeks:
"20 0 16,2 * * /sbin/init.d/cmf rotate"
Add entry to root crontab? [yes]: yes

The following crontab entry will archive and backup the rms database at 2:05 every
day:
"5 2 * * * /usr/bin/rmsbackup"
```

```
Add entry to root crontab? [yes]: yes

sra setup completed successfully.

------------------------------------------------------
#
```

E.2 clu_create

One of the tasks performed by the `sra clu_create` command is to run the `clu_create` command. Each time you run `clu_create`, it writes log messages to the file `/cluster/admin/clu_create.log`. Example E–3 shows a sample `clu_create` log file.

Example E–3 Sample clu_create Log File

```
################################################################################
clu_create on 'atlas0' begin logging at Tue Nov 18 09:25:20 EST 2003
--------------------------------------------------------------------------
Cluster interconnect present

*** Error ***
 This system has only Tru64 UNIX patches installed.
 Please install the latest TruCluster Server patches on your system.
 You can obtain the most recent patch kit from:
          http://www.support.compaq.com/patches/

*** Info ***
 clu_create: Using configuration file '/tmp/sra_tmp.27624'.
Checking cluster name: atlasD0.
Checking cluster alias IP address: 16.21.24.64.
Checking the cluster root partition: dsk3b.
Checking the cluster usr partition: dsk3g.
Checking the cluster var partition: dsk3h.
Checking cluster member ID: 1.
Checking number of votes for this member: 1.
Checking the member boot disk: dsk0.
Checking virtual cluster interconnect device: ics0.
Checking virtual cluster interconnect IP name: atlas0-ics0.
Checking virtual cluster interconnect IP address: 10.0.1.1.
Checking physical cluster interconnect interface device name(s): mc0.
clu_common: Cluster interconnect present

Creating required disk labels.
  Creating disk label on member disk: dsk0.
  Initializing cnx partition on member disk: dsk0h.

Creating AdvFS domains:
  Creating AdvFS domain 'root1_domain#root' on partition '/dev/disk/dsk0a'.
  Creating AdvFS domain 'cluster_root#root' on partition '/dev/disk/dsk3b'.
  Creating AdvFS domain 'cluster_usr#usr' on partition '/dev/disk/dsk3g'.
  Creating AdvFS domain 'cluster_var#var' on partition '/dev/disk/dsk3h'.

Populating clusterwide root, usr, and var file systems:
  Copying root file system to 'cluster_root#root'.
.
  Copying usr file system to 'cluster_usr#usr'.
..................
  Copying var file system to 'cluster_var#var'.
..
```

```
Creating Context Dependent Symbolic Links (CDSLs) for file systems:
  Creating CDSLs in root file system.
  Creating CDSLs in usr  file system.
  Creating CDSLs in var  file system.
  Creating links between clusterwide file systems.

Populating member's root file system.

Modifying configuration files required for cluster operation:
  Creating /etc/fstab file.
  Configuring cluster alias.
  Updating member-specific /etc/inittab file with 'cms' entry.
  Updating /etc/rc.config file.
  Creating gated.conf file.
  Updating /etc/sysconfigtab file.
clu_create: type is mct!
  Retrieving cluster_root major and minor device numbers.
  Creating cluster device file CDSLs.
  Updating /.rhosts - adding hostname 'atlasD0'.
  Updating /etc/hosts.equiv - adding hostname 'atlasD0'.
  Updating /.rhosts - adding hostname 'atlas0-ics0'.
  Updating /etc/hosts.equiv - adding hostname 'atlas0-ics0'.
Configuring /.shosts file for: atlasD0
  Updating /etc/ifaccess.conf - adding deny entry for 'ee0'.
  Updating /etc/ifaccess.conf - adding deny entry for 'ee1'.
  Updating /etc/ifaccess.conf - adding deny entry for 'sl0'.
  Updating /etc/ifaccess.conf - adding deny entry for 'tun0'.
  Updating /etc/ifaccess.conf - adding deny entry for 'tun1'.
  Updating /etc/cfgmgr.auth - adding hostname 'atlas0'.
  Finished updating member1-specific area.

Building a kernel for this member.
  Saving kernel build configuration.
  The kernel will now be configured using the doconfig program.

*** Warning ***
  File in /usr/sys/BINARY found as a file, expected symlink: GENERIC.mod.

*** Warning ***
  File in /usr/sys/BINARY found as a file, expected symlink: GENERIC_EXTRAS.mod.

*** KERNEL CONFIGURATION AND BUILD PROCEDURE ***

Saving /sys/conf/ATLAS0 as /sys/conf/ATLAS0.bck


*** PERFORMING KERNEL BUILD ***
        Working....Tue Nov 18 09:31:26 EST 2003

The new kernel is /sys/ATLAS0/vmunix
  Finished running the doconfig program.
```

```
  The kernel build was successful and the new kernel
   has been copied to this member's boot disk.
  Restoring kernel build configuration.

Updating console variables.
  Setting console variable 'bootdef_dev' to dsk0.
  Setting console variable 'boot_dev' to dsk0.
  Setting console variable 'boot_reset' to ON.
  Saving console variables to non-volatile storage.

clu_create: Cluster created successfully.

To run as a single member cluster, this system must be rebooted.
To reboot this system as a cluster member, do the following:
    o shutdown -r now
------------------------------------------------------------------------
clu_create on 'Tue Nov 18 09:32:10 EST 2003' end logging at atlas0
```

E.3 clu_add_member

One of the tasks performed by the `sra add_member` command is to run the `clu_add_member` command. Each time you run `clu_add_member`, it writes log messages to the file `/cluster/admin/clu_add_member.log`.

Example E–4 shows a sample `clu_add_member` log file.

Example E–4 Sample clu_add_member Log File

```
################################################################################
clu_add_member on 'atlas0' begin logging at Tue Nov 18 09:37:43 EST 2003
--------------------------------------------------------------------------------

*** Info ***
 clu_add_member: Using configuration file '/tmp/sra_tmp.527123'.
Checking member's hostname: atlas1.
Checking cluster member ID: 2.
Checking number of votes for this member: 0.
Checking the member boot disk: dsk6.
Checking virtual cluster interconnect device: ics0.
Checking virtual cluster interconnect IP name: atlas1-ics0.
Checking virtual cluster interconnect IP address: 10.0.0.2.
Checking physical cluster interconnect interface device name(s): mc0.

Creating required disk labels.
  Creating disk label on member disk: dsk6.
  Initializing cnx partition on member disk: dsk6h.

Creating AdvFS domains:
  Creating AdvFS domain 'root1_domain#root' on partition 'dsk6a'.

Creating cluster member-specific files:
  Creating new member's root member-specific files.
  Creating new member's usr  member-specific files.
  Creating new member's var  member-specific files.
  Creating new member's boot member-specific files.

Modifying configuration files required for new member operation:
  Updating /etc/rc.config.
  Updating /etc/sysconfigtab.
  Updating member-specific /etc/inittab file with 'cms' entry.
  Updating /.rhosts - adding hostname 'atlas1-ics0'.
  Updating /etc/hosts.equiv - adding hostname 'atlas1-ics0'.
  Updating /etc/cfgmgr.auth - adding hostname 'atlas1'.
  Configuring cluster alias.
  Configuring Network Time Protocol for new member.
  Adding interface 'atlas0-ics0' as an NTP peer to member 'atlas1'.
  Adding interface 'atlas1-ics0' as an NTP peer to member 'atlas0'.

Configuring automatic subset configuration and kernel build.
```

```
clu_add_member: Initial member 2 configuration completed successfully.
From the newly added member's console, perform the following steps to
complete the newly added member's configuration:

    1. Set the console variable 'boot_osflags' to 'A'.
    2. Identify the console name of the newly added member's boots device:

       >>>show device

       The newly added member's boot device has the following properties:

       Manufacturer: DEC
       Model: HSG80
       Target: IDENTIFIER=14
       Lun: UNKNOWN
       Serial Number: SCSI-WWID:01000010:6000-1fe1-000d-6480-0009-0440-4188-00ef

       Note: The SCSI bus number may differ when viewed from different members.

    3. Boot the newly added member using genvmunix:

        >>>boot -file genvmunix <new-member-boot-device>

       During this initial boot the newly added member will:

       o  Configure each installed subset.

       o  Attempt to build and install a new kernel. If the system cannot
          build a kernel, it starts a shell where you can attempt to build
          a kernel manually. If the build succeeds, copy the new kernel to
          /vmunix. When you are finished, exit the shell using ^D or 'exit'.

       o  The newly added member will attempt to set boot related console
          variables and continue to boot to multi-user mode.

       o  After the newly added member boots, you should setup your system
          default network interface using the appropriate system management
          command.
------------------------------------------------------------------------
clu_add_member on 'Tue Nov 18 09:40:48 EST 2003' end logging at atlas0
```

E.4 clu_quorum

Example E–5 shows sample output from the `clu_quorum` command for a five-node cluster. This example shows the output generated by running `clu_quorum` immediately after adding votes (see Section 8.2.2 on page 8–4) but before booting the updated nodes:

- The Running Value of `cluster_expected_votes` for updated nodes is 3.
- The Running Value of `cluster_expected_votes` for the remaining nodes is 1.

After booting the nodes, the Running Value of `cluster_expected_votes` is 3 for all nodes.

Example E–5 Sample clu_quorum Output

```
atlas0 # clu_quorum
Cluster Quorum Data for: atlasD0 as of Fri Nov 21 11:04:52 EST 2003

Cluster Common Quorum Data
Quorum disk:   Not Configured
File:          /etc/sysconfigtab.cluster

Attribute                                File Value
expected votes                                  3

Member 1 Quorum Data
Host name:     atlas0                          Status:                  UP
File:          /cluster/members/member1/boot_partition/etc/sysconfigtab

Attribute             Running Value          File Value
current votes                     3                N/A
quorum votes                      2                N/A
expected votes                    3                  3
node votes                        1                  1
qdisk votes                       0                  0
qdisk major                       0                  0
qdisk minor                       0                  0

Member 2 Quorum Data
Host name:     atlas1                          Status:                  UP
File:          /cluster/members/member2/boot_partition/etc/sysconfigtab

Attribute             Running Value          File Value
current votes                     3                N/A
quorum votes                      2                N/A
expected votes                    3                  3
node votes                        1                  1
qdisk votes                       0                  0
qdisk major                       0                  0
qdisk minor                       0                  0
```

```
Member 3 Quorum Data
Host name:     atlas2                                Status:                 UP
File:          /cluster/members/member3/boot_partition/etc/sysconfigtab

Attribute             Running Value          File Value
current votes                     3                N/A
quorum votes                      2                N/A
expected votes                    3                  3
node votes                        1                  1
qdisk votes                       0                  0
qdisk major                       0                  0
qdisk minor                       0                  0

Member 4 Quorum Data
Host name:     atlas3                                Status:                 UP
File:          /cluster/members/member4/boot_partition/etc/sysconfigtab

Attribute             Running Value          File Value
current votes                     3                N/A
quorum votes                      2                N/A
expected votes                    3                  3
node votes                        0                  0
qdisk votes                       0                  0
qdisk major                       0                  0
qdisk minor                       0                  0

<with similar output for each additional member>
atlas0 #
```

E.5 upgrade_check

Table E–1 summarises the output from sample tests run using the `upgrade_check` command.

Table E–1 Upgrade Check Output

Test Name	Description	Solution
`preinst.accounting.in_place`	Lists the domains that have HP AlphaServer SC-specific UNIX accounting in place.	Follow the instructions for removing HP AlphaServer SC UNIX Accounting in Chapter 21 of the *HP AlphaServer SC Administration Guide*.
`preinst.advfs_domain.root_domain`	Lists the domains that do not have an advfs `root_domain` domain defined for the UNIX disk.	Without this advfs domain, you will not be able to perform the pre-upgrade backup. You may proceed at your own risk, or follow the instructions in the *Tru64 UNIX Installation Guide* for building a UNIX disk.
`preinst.advfs_domain.unix_disk`	Lists the domain members that have advfs domains referencing the UNIX disk. If a domain is down, the test could not be performed and its entry is marked with a ? (for example: atlasD1?)	Replace the link in `/etc/fdmns/*_domain` with a link to the member's `bootdef_dev`.
`preinst.advfs_domain.usr_domain`	Lists the domains that do not have an advfs `usr_domain` domain defined for the UNIX disk.	Without this advfs domain, you will not be able to perform the pre-upgrade backup. You may proceed at your own risk, or follow the instructions in the *Tru64 UNIX Installation Guide* for building a UNIX disk.
`preinst.advfs_domain.var_domain`	Lists the domains that do not have an advfs `root_domain` domain defined for the UNIX disk.	Without this advfs domain, you will not be able to perform the pre-upgrade backup. You may proceed at your own risk, or follow the instructions in the *Tru64 UNIX Installation Guide* for building a UNIX disk.

Table E–1 Upgrade Check Output

Test Name	Description	Solution
`preinst.clu_upgrade.error`	Running `clu_upgrade check setup` on the domains produced errors. If a domain was not available, the test could not be run and its entry is marked with a ? (for example: atlasD1?)	Run `clu_upgrade check setup` manually to determine the cause of the errors.
`preinst.cluvote.expected_file_mismatch`	The expected votes (file value) is not equal to the sum of each member's node votes (file value) for the listed nodes.	Use `clu_quorum` to reset the members voting rights, or the cluster's expected votes.
`preinst.cluvote.expected_running_mismatch`	The expected votes (running value) is not equal to the sum of each member's node votes (running value) for the listed nodes.	Use `clu_quorum` to reset the members voting rights, or the cluster's expected votes.
`preinst.cluvote.not_run`	Lists domains that were unavailable, or the `clu_quorum` command could not be run when checking for cluster member voting rights.	Bring the cluster up or remove it from the HP AlphaServer SC system. If the cluster was already up, then run the `clu_quorum` command to determine the cause of the error.
`preinst.cluvote.no_vote`	Lists the domains that have lead nodes without voting rights	Use `clu_quorum` to reset the voting rights of the lead nodes.
`preinst.cluvote.vote_mismatch`	Lists the nodes that have a different vote value at runtime than appears in `/etc/sysconfigtab`.	Use `clu_quorum` to reset the members voting rights, or the cluster's expected votes.
`preinst.database.not_setup`	The database is not set up on the (lead) nodes. If a node is not available, its entry is marked with a ? (for example: atlas1?)	Ensure the HP AlphaServer SC database is set up and rmshost is set correctly.
`preinst.dbrev.incompatible`	The upgrade is incompatible with the current database version.	Return the database to the version originally installed with your HP AlphaServer SC system.

Table E–1 Upgrade Check Output

Test Name	Description	Solution
`preinst.dir.not_directory`	Lists the domains on which the listed file ought to be a directory, but it is not. If a domain was down, then the test could not be run and its entry is marked with a ? (for example: atlasD1?)	If the file does not exist, then create it using `mkdir`. If a link exists in its place, then remove the link and copy the directory it points to.
`preinst.disk_space.fs_capacity`	Lists the domains that have important file systems over 50% full. If a domain is down, the test could not be performed and its entry is marked with a ? (for example: atlasD1?)	Remove unimportant files from the indicated file systems.
`preinst.domain_members.unavailable`	Lists the nodes that are not in multi-user mode.	Bring the nodes to multi-user state with `sra boot` or delete them from their domains with `sra delete_member`.
`preinst.evm.evm_errors`	There are errors in EVM on the listed domains. If a domain is down, the test could not be performed and its entry is marked with a ? (for example: atlasD1?)	Run the command: `evmget -A -f '[name *.evm] & [age < 5m]'` on the domains and look for errors.
`preinst.ext_adapter.bad_ext_adapter`	Lists the nodes that have external network adapters that are not correctly described in the SC database. If a node is not available, its entry is marked with a ? (eg: atlas1?)	Use the `sra edit` command to update the database to reflect these adapters
`preinst.file_system.pfs_mod_loaded`	Lists the nodes that have the pfs.mod module configured into the kernel. If a node is down, the test could not be performed and its entry is marked with a ? (for example: atlas1?)	Unload the kernel module on all nodes using the command: `scrun -n all /sbin/sysconfig -u pfs`

Table E–1 Upgrade Check Output

Test Name	Description	Solution
`preinst.file_system.pfs_online`	Lists the PFS file systems that are online.	Put the file systems in the offline state using: `pfsmgr offline all` Unload the kernel module on all nodes using: `scrun -n all /sbin/sysconfig -u pfs`
`preinst.file_system.scfs_online`	Lists the SCFS file systems that are online.	Put the file systems in the offline state using: `scfsmgr offline all`
`preinst.generic_boot_disk.used`	Lists domains that have advfs file domains that use the generic boot disk. If a domain was unavailable, the test could not be performed and its entry is marked with a ? (for example: atlasD1?)	Remove the generic boot disk from any advfs domains.
`preinst.general.scrun_error`	There was a problem running `scrun`.	The current test could not be run. Correct the problem with `scrun` and rerun this program.

Table E–1 Upgrade Check Output

Test Name	Description	Solution

`preinst.inetd.atypical`	Lists domains that have changed one or more of the typical entries in `/etc/inetd.conf` (ftp, telnet, shell, login, exec, cfgmgr, and only on the management server: tftp).	Replace the modified `/etc/inetd.conf` with the original or replace the appropriate entry with one the following:
		
		`ftp stream tcp nowait root /usr/sbin/ftpd ftpd`
		
		`telnet stream tcp nowait root /usr/sbin/telnetd telnetd`
		
		`shell stream tcp nowait root /usr/sbin/rshd rshd`
		
		`login stream tcp nowait root /usr/sbin/rlogind rlogind`
		
		`exec stream tcp nowait root /usr/sbin/rexecd rexecd`
		
		`cfgmgr stream tcp nowait root /sbin/cfgmgr cfgmgr`
		
		`tftp dgram udp wait root /usr/sbin/tftpd tftpd /tmp /var/adm/ris /ris`

Table E–1 Upgrade Check Output

Test Name	Description	Solution

`preinst.inetd.missing`	Lists the domains that are missing one or more of the typical entries in `/etc/inetd.conf` (ftp, telnet, shell, login, exec, cfgmgr, and only on the management server: tftp).	Replace the modified `/etc/inetd.conf` with the original or add one of the following as appropriate:
		
		`ftp stream tcp nowait root /usr/sbin/ftpd ftpd`
		
		`telnet stream tcp nowait root /usr/sbin/ telnetd telnetd`
		
		`shell stream tcp nowait root /usr/sbin/rshd rshd`
		
		`login stream tcp nowait root /usr/sbin/rlogind rlogind`
		
		`exec stream tcp nowait root /usr/sbin/rexecd rexecd`
		
		`cfgmgr stream tcp nowait root /sbin/cfg- mgr cfgmgr`
		
		`tftp dgram udp wait root /usr/sbin/tftpd tftpd /tmp /var/adm/ris /ris`

`preinst.inetd.notrun`	The test for typical entries in `/etc/inetd.conf` could not be run on the listed domains.	Bring the domains back on line and run this program again.
`preinst.license.advfs -utilities`	The lead node of each of the listed domains did not have the ADVFS-UTILITIES license installed. If the lead node of a domain is down, the test could not be performed and its entry is marked with a ? (for example: atlasD1?)	Install the ADVFS-UTILITIES on the domains listed.

Table E–1 Upgrade Check Output

Test Name	Description	Solution
`preinst.mac_addr.bad_mac_addr`	Lists the nodes that are missing from `/etc/bootptab` or have MAC addresses that are different from what `hwmgr` returned. If a node was down or `hwmgr` returned an error, then the test could not be performed and the node is marked with ? (for example: atlas1?)	Check the actual MAC addresses using `hwmgr` and update `/etc/bootptab` to have the correct values.
`preinst.osrev.wrong_rev`	Lists the domains that are running a version of the operating system that is not compatible with the upgrade. If a domain was not available or the `uname` command produced an error, then the test could not be performed and its entry is marked with a ? (for example: atlasD1?)	Bring the domains to the recommended operating system level before upgrading HP AlphaServer SC.
`preinst.ris.not_installed`	No RIS server detected on the management server.	If you have not installed RIS elsewhere, then install it on the management server.

Table E–1 Upgrade Check Output

Test Name	Description	Solution

`preinst.ris_rsh.bad_number`	Lists the nodes that must update `/etc/sysconfigtab` before performing the upgrade. If a node is down, the test could not be run and its entry is marked with a ? (for example: atlas1?)	Update the `sysconfigtab` file on the management server and lead nodes of each domain as follows:
		1. Create a temp file (for example, `/tmp/risfix`) with the following entries:
		`inet:`
		`tcp_sendspace = 61440`
		`tcp_recvspace = 61440`
		
		2. Run the command:
		`sysconfigdb -m -f /tmp/risfix`
		
		3. Run the command:
		`sysconfig -r inet tcp_sendspace=61440`
		
		4. Run the command:
		`sysconfig -r inet tcp_recvspace=61440`
		
		5. Reboot
		
		Then repeat these steps on the management server and all lead nodes.

`preinst.routes.no_default`	Lists the nodes that do not have a default route in `/etc/routes`. If a node was unavailable, the test could not be performed and its entry is marked with a ? (for example: atlas1?)	If the nodes do not have an external interface, add a default route by running the following command for the appropriate nodes: `sra command -node 'atlas[2-31]' -command /usr/sra/bin/SetDefaultRoute -m 1` (substitute the nodes listed for atlas[2-31])

Table E–1 Upgrade Check Output

Test Name	Description	Solution
preinst.sia.grep_error	When checking /var/adm/cdsl_admin.inv for /etc/sia, either the domain was down or an error occurred with grep (most likely, the file was missing).	Boot the domain(s), if necessary, and check that the file /var/adm/cdsl_admin.inv exists. If not, check the log for the exact error that grep is returning. After you have corrected the problem, rerun this program.
preinst.sia.incorrect_file	The file /etc/sia was found to be a link, or was not found at all.	Replace /etc/sia with a plain file.
preinst.sia.in_inventory	An entry was found for /etc/sia in /var/adm/cdsl_admin.inv.	Remove the /etc/sia entry in /var/adm/cdsl_admin.inv.
preinst.superuser.password_different	The root password for some domains may differ from others as the encrypted passwords are different. This can occur if passwords are actually different or if they have been set individually on each domain rather than sharing/replicating password files for all domains.	Check the root password on one domain in each set. If the sets have different root passwords, change the password on the appropriate domains (using NIS or by copying the /etc/passwd file) so that all domains are in agreement.
preinst.superuser.password_notrun	The test for root passwords could not be run on the listed domains.	Boot the domains and rerun this program.
preinst.unix_disk.bad_disk	Lists the domains that may not have a UNIX disk, or the disk may not have a /vmunix. If a domain was unavailable or if there were problems during test execution, then the test could not be performed and its entry will be marked with a ? (for example: atlasD1?).	Check that the UNIX disk is available that the system can boot from it.
preinst.unix_disk.mounted	Lists the domains that have mounted root_domain#root.	Unmount root_domain#root on the indicated domains.
preinst.unix_disk.no_comparison_made	Unable to compare the disks known to hwmgr to those listed in the devices/disk directory for the listed domains.	This usually means that the domains were unavailable. Reboot the domains and run this script again.

Table E–1 Upgrade Check Output

Test Name	Description	Solution
preinst.unix_disk.not_unmounted	Unable to unmount root_domain#root on the listed domains.	Unmount root_domain#root on the indicated domains.
preinst.unix_disk.not_in_hwmgr	Lists the domains that have disks that are listed in devices/disk on the unix_disk, but which hwmgr knows nothing about.	See Section 11.20 for information on correcting this problem.
preinst.unix_disk.not_on_unixdisk	Lists the domains that have disks that hwmgr knows about, but that do not appear in the devices/disk directory on the unix_disk.	See Section 11.20 for information on correcting this problem.
preinst.volumes.multiple	The listed advfs domains on the named TruCluster domain are composed of multiple volumes. After the upgrade, the advfs domain will have only one volume defined.	Recreate the missing symbolic link(s) after the upgrade.
preinst.volumes.unavailable	Lists the TruCluster domains that were unavailable when checking for multiple volumes in the advfs domains.	Reboot the domains and run this program again.
preinst.webes.installed	Lists the domains that have WEBES installed.	Use setld -i to find the exact name of the WEBESBASE subset, then use setld -d to remove it from the node(s).

F

Cluster-Related Messages in System Log Files

The following sections show excerpts from system log files in the `/var/adm/syslog.dated/date` directories:

- Startup Messages After Creating a Domain (see Section F.1 on page F–2)
- Startup Messages After Adding a Domain Member (see Section F.2 on page F–9)

These messages track normal cluster startup operations; therefore, in addition to providing some level of assurance that cluster formation and recovery operations are proceeding in an orderly fashion, they also provide a starting point for troubleshooting cluster-related problems.

F.1 Startup Messages After Creating a Domain

Example F–1 shows a transcript of a portion of the startup messages displayed during a reboot of the first cluster member system after running `sra install -node atlas0`. This information is also sent to `/var/adm/syslog.dated/date/kern.log`.

Example F–1 Startup Messages After Creating a Domain

```
18/Nov/2003 09:34:11 resetting all I/O buses
18/Nov/2003 09:34:34 (boot dka0.0.0.2.1 -flags A)
18/Nov/2003 09:34:34 block 0 of dka0.0.0.2.1 is a valid boot block
18/Nov/2003 09:34:34 reading 19 blocks from dka0.0.0.2.1
18/Nov/2003 09:34:34 bootstrap code read in
18/Nov/2003 09:34:34 base = 200000, image_start = 0, image_bytes = 2600(9728)
18/Nov/2003 09:34:34 initializing HWRPB at 2000
18/Nov/2003 09:34:34 initializing page table at 3ff56000
18/Nov/2003 09:34:34 initializing machine state
18/Nov/2003 09:34:34 setting affinity to the primary CPU
18/Nov/2003 09:34:34 jumping to bootstrap code
18/Nov/2003 09:34:36
18/Nov/2003 09:34:36 UNIX boot - Wednesday October 16, 2002
18/Nov/2003 09:34:36
18/Nov/2003 09:34:36 Loading vmunix ...
18/Nov/2003 09:34:36 Loading at 0xfffffc0000230000
18/Nov/2003 09:34:36
18/Nov/2003 09:34:36 Sizes:
18/Nov/2003 09:34:36 text =  9418368
18/Nov/2003 09:34:40 data =  2387520
18/Nov/2003 09:34:40 bss  =  2564224
18/Nov/2003 09:34:40 Starting at 0xfffffc00002439c0
18/Nov/2003 09:34:40
18/Nov/2003 09:34:42 Loading vmunix symbol table ... [2319928 bytes]
18/Nov/2003 09:34:43 Memory trolling not supported, cpu Major id 13, Minor id 3
18/Nov/2003 09:34:44 Alpha boot: available memory from 0x38d4000 to 0xffff4000
18/Nov/2003 09:34:44 Compaq Tru64 UNIX V5.1B (Rev. 2650); Tue Nov 18 09:31:54 EST
2003
18/Nov/2003 09:34:44 physical memory = 4096.00 megabytes.
18/Nov/2003 09:34:44 available memory = 3968.10 megabytes.
18/Nov/2003 09:34:44 using 15658 buffers containing 122.32 megabytes of memory
18/Nov/2003 09:34:45 Master cpu at slot 0
18/Nov/2003 09:34:45 Starting secondary cpu 1
18/Nov/2003 09:34:45 Starting secondary cpu 2
18/Nov/2003 09:34:45 Starting secondary cpu 3
18/Nov/2003 09:34:45 Firmware revision: 6.4-17
18/Nov/2003 09:34:45 PALcode: UNIX version 1.91-104
18/Nov/2003 09:34:45 AlphaServer ES40
18/Nov/2003 09:34:45 pci1 (primary bus:1) at nexus
18/Nov/2003 09:34:45 pci2 (primary bus:1 subordinate bus:2) at pci1 slot 1
18/Nov/2003 09:34:45 ee0 at pci2 slot 4
18/Nov/2003 09:34:45 ee0: COMPAQ Intel 82558 (10/100 Mbps) Ethernet Interface
18/Nov/2003 09:34:45 ee0: Driver Rev = V1.0.23, Chip Rev = 5, hardware address:
00-02-A5-6B-28-7C
```

```
18/Nov/2003 09:34:45 ee1 at pci2 slot 5
18/Nov/2003 09:34:45 ee1: COMPAQ Intel 82558 (10/100 Mbps) Ethernet Interface
18/Nov/2003 09:34:45 ee1: Driver Rev = V1.0.23, Chip Rev = 5, hardware address:
00-02-A5-6B-28-7D
18/Nov/2003 09:34:46 itpsa0 at pci1 slot 2
18/Nov/2003 09:34:46 IntraServer ROM Version V2.0 (c)1998
18/Nov/2003 09:34:47 ee0: Autonegotiated, 100 Mbps full duplex
18/Nov/2003 09:34:47 ee1: Autonegotiated, 100 Mbps full duplex
18/Nov/2003 09:34:49 scsi0 at itpsa0 slot 0 rad 0
18/Nov/2003 09:34:49 emx0 at pci1 slot 3
18/Nov/2003 09:34:49 KGPSA-CA : Driver Rev 2.10 : F/W Rev 3.81A4(2.01A0) : wwn
1000-0000-c922-39c4
18/Nov/2003 09:34:49 emx0: Using console topology setting of : Fabric
18/Nov/2003 09:34:50 scsi1 at emx0 slot 0 rad 0
18/Nov/2003 09:34:50 emx2 at pci1 slot 4
18/Nov/2003 09:34:50 KGPSA-CA : Driver Rev 2.10 : F/W Rev 3.81A4(2.01A0) : wwn
1000-0000-c923-e69c
18/Nov/2003 09:34:50 emx2: Using console topology setting of : Fabric
18/Nov/2003 09:34:50 scsi2 at emx2 slot 0 rad 0
18/Nov/2003 09:34:51 pci0 (primary bus:0) at nexus
18/Nov/2003 09:34:51 elan0: Device revision = 1 (Rev B)
18/Nov/2003 09:34:51 elan0: QSW Elan3 PCI Network Adaptor
18/Nov/2003 09:34:51 elan0: Serial Number - 380
18/Nov/2003 09:34:51 elan0: memory bank 0 is 32768K
18/Nov/2003 09:34:56 elan0: memory bank 1 is 32768K
18/Nov/2003 09:35:05 elan30 at pci0 slot 3
18/Nov/2003 09:35:05 isa0 at pci0
18/Nov/2003 09:35:05 gpc0 at isa0
18/Nov/2003 09:35:05 gpc1 not probed
18/Nov/2003 09:35:05 ace0 at isa0
18/Nov/2003 09:35:05 ace1 at isa0
18/Nov/2003 09:35:05 jtag0 at isa0
18/Nov/2003 09:35:05 fdi0 at isa0
18/Nov/2003 09:35:05 fd0 at fdi0 unit 0
18/Nov/2003 09:35:05 ata0 at pci0 slot 15
18/Nov/2003 09:35:05 ata0: ACER M1543C
18/Nov/2003 09:35:07 scsi3 at ata0 slot 0 rad 0
18/Nov/2003 09:35:07 scsi4 at ata0 slot 1 rad 0
18/Nov/2003 09:35:07 usb0 at pci0 slot 19
18/Nov/2003 09:35:07 Created FRU table binary error log packet
18/Nov/2003 09:35:07 kernel console: ace0
18/Nov/2003 09:35:07 dli: configured
18/Nov/2003 09:35:07 NetRAIN configured.
18/Nov/2003 09:35:07 Random number generator configured.
18/Nov/2003 09:35:08 ATM Subsystem configured with 4 restart threads
18/Nov/2003 09:35:08 ATMUNI: configured
18/Nov/2003 09:35:08 ATMSIG: 3.x (module=uni3x) configured
18/Nov/2003 09:35:08 ILMI: 3.x (module=ilmi) configured
18/Nov/2003 09:35:08 ATM IP: configured
18/Nov/2003 09:35:08 ATM LANE: configured.
18/Nov/2003 09:35:08 ATM IFMP: configured
18/Nov/2003 09:35:08 elan0: nodeid=128 level=5 numnodes=512
```

Startup Messages After Creating a Domain

```
18/Nov/2003 09:35:08 TruCluster Server V5.1-SC-V2.6-BL5-3320-EAGLE  (Rev. 13320);
11/16/03 01:44
18/Nov/2003 09:35:08 elan0: waiting for network position to be found
18/Nov/2003 09:35:08 elan0: nodeid=128 level=3 numnodes=128
18/Nov/2003 09:35:08 elan0: Online  [0]
18/Nov/2003 09:35:08 elan0: Nodeset [0]
18/Nov/2003 09:35:08 elan0: network position found at nodeid 0
18/Nov/2003 09:35:08 eip: checksums disabled - all other nodes must also disable
checksums
18/Nov/2003 09:35:08 eip: Elan IP initialized
18/Nov/2003 09:35:08 TNC kproc_creator_daemon: Initialized and Ready
18/Nov/2003 09:35:08 clubase: configured
18/Nov/2003 09:35:08 icsnet: configured
18/Nov/2003 09:35:08 drd configured 0
18/Nov/2003 09:35:08 kch: configured
18/Nov/2003 09:35:08 dlm: configured
18/Nov/2003 09:35:08 Starting CFS daemons
18/Nov/2003 09:35:08 Registering CFS Services
18/Nov/2003 09:35:08 Initializing CFSREC ICS Service
18/Nov/2003 09:35:08 Registering CFSMSFS remote syscall interface
18/Nov/2003 09:35:09 Registering CMS Services
18/Nov/2003 09:35:09 ep_enable_cluster_protocols: no longer implemented
18/Nov/2003 09:35:09 ics_elan: seticsinfo: [elan node 0] <=> [ics node 1]
18/Nov/2003 09:35:19 CNX MGR: Cluster atlasD0 incarnation 0x8ae4 has been formed
18/Nov/2003 09:35:19 CNX MGR: Founding node id is 1 csid is 0x10001
18/Nov/2003 09:35:19 CNX MGR: membership configuration index: 1 (1 additions, 0
removals)
18/Nov/2003 09:35:19 CNX MGR: quorum (re)gained, (re)starting cluster operations.
18/Nov/2003 09:35:19 Joining versw kch set.
18/Nov/2003 09:35:19 CNX MGR: Node atlas0 1 incarn 0x8ae4 csid 0x10001 has been
added to the cluster
18/Nov/2003 09:35:19 dlm: resuming lock activity
18/Nov/2003 09:35:19 kch: resuming activity
18/Nov/2003 09:35:19 clsm: checking for peer configurations
18/Nov/2003 09:35:19 clsm: initialized
18/Nov/2003 09:35:19 Waiting for cluster mount to complete
18/Nov/2003 09:35:20 scsi0: SCSI Bus was reset
18/Nov/2003 09:35:20 cam_logger: SCSI event packet
18/Nov/2003 09:35:20 cam_logger: bus 0
18/Nov/2003 09:35:20 itpsa SCSI HBA
18/Nov/2003 09:35:20 SCSI Bus was reset
18/Nov/2003 09:35:20
18/Nov/2003 09:35:20 elan0: Online Ack from [1-3]
18/Nov/2003 09:35:21 SCFS: SCFS/Elan Services Initialised on node 0(0x0) railmask
0x1
18/Nov/2003 09:35:21 vm_swap_init: swap is set to eager allocation mode
18/Nov/2003 09:35:22 CMS: Joining deferred filesystem sets
18/Nov/2003 09:35:22 Checking device naming:
18/Nov/2003 09:35:22 Checking local filesystems
18/Nov/2003 09:35:22 Mounting / (root)
18/Nov/2003 09:35:23 user_cfg_pt: reconfigured
18/Nov/2003 09:35:23 root_mounted_rw: reconfigured
```

```
18/Nov/2003 09:35:23 Mounting /cluster/members/member1/boot_partition (boot
filesystem)
18/Nov/2003 09:35:23 user_cfg_pt: reconfigured
18/Nov/2003 09:35:23 root_mounted_rw: reconfigured
18/Nov/2003 09:35:23 Device Naming: first boot initialization . . .
18/Nov/2003 09:35:26 elan0: Online Ack from [4-15]
18/Nov/2003 09:35:27 ptm
18/Nov/2003 09:35:27 user_cfg_pt: reconfigured
18/Nov/2003 09:35:28 Mounting local filesystems
18/Nov/2003 09:35:28 exec: /sbin/mount_advfs -F 0x14000 cluster_root#root /
18/Nov/2003 09:35:28 cluster_root#root on / type advfs (rw)
18/Nov/2003 09:35:28 exec: /sbin/mount_advfs -F 0x4000 cluster_usr#usr /usr
18/Nov/2003 09:35:28 cluster_usr#usr on /usr type advfs (rw)
18/Nov/2003 09:35:28 exec: /sbin/mount_advfs -F 0x4000 cluster_var#var /var
18/Nov/2003 09:35:29 cluster_var#var on /var type advfs (rw)
18/Nov/2003 09:35:29 /proc on /proc type procfs (rw)
18/Nov/2003 09:35:29 Nov 18 09:35:27 esmd: Essential Services Monitor daemon
started
18/Nov/2003 09:35:29 Subsystem hwautoconfig was successfully configured.
18/Nov/2003 09:35:29 Subsystem shmem was successfully configured.
18/Nov/2003 09:35:29 Subsystem pfs was successfully configured.
18/Nov/2003 09:35:30 Environmental Monitoring Subsystem Configured.
18/Nov/2003 09:35:30 Subsystem envmon was successfully configured.
18/Nov/2003 09:35:30 Nov 18 09:35:28 update: started
18/Nov/2003 09:35:31
18/Nov/2003 09:35:31 Checking for Installation Tasks...
18/Nov/2003 09:35:33
18/Nov/2003 09:35:33 Executing Installation Tasks...
18/Nov/2003 09:35:34 Clusterizing NIS server configuration
18/Nov/2003 09:35:35 Clusterizing mail...
18/Nov/2003 09:35:35 Removing /var/adm/sendmail/Makefile.cf.atlas0
18/Nov/2003 09:35:35 Renaming /var/adm/sendmail/atlas0.m4 to /var/adm/sendmail/
atlasD0.m4
18/Nov/2003 09:35:35 Renaming /var/adm/sendmail/atlas0.cf to /var/adm/sendmail/
atlasD0.cf
18/Nov/2003 09:35:35 Saving original /var/adm/sendmail/sendmail.cf as /var/adm/
sendmail/sendmail.cf.cluster.sav
18/Nov/2003 09:35:35 Saving original /var/adm/sendmail/atlasD0.m4 as /var/adm/
sendmail/atlasD0.m4.cluster.sav
18/Nov/2003 09:35:36 Changes to mail configuration complete
18/Nov/2003 09:35:37 set boot_reset = off
18/Nov/2003 09:35:38
18/Nov/2003 09:35:38 *** KERNEL CONFIGURATION AND BUILD PROCEDURE ***
18/Nov/2003 09:35:38
18/Nov/2003 09:35:38 Saving /sys/conf/GENERIC as /sys/conf/GENERIC.bck
18/Nov/2003 09:35:38
18/Nov/2003 09:35:38
18/Nov/2003 09:35:38 *** PERFORMING KERNEL BUILD ***
18/Nov/2003 09:35:50    Working....Tue Nov 18 09:35:47 EST 2003
18/Nov/2003 09:36:37
18/Nov/2003 09:36:37 The new kernel is /sys/GENERIC/vmunix
18/Nov/2003 09:36:42 Primary Boot Disk: dsk0
18/Nov/2003 09:36:42 Alternate Boot Disk: dsk1
```

```
18/Nov/2003 09:36:46 Using /var/adm/sc.binary.errlog as the common log Replacing
existing /etc/binlog.conf entries ... Removing existing /etc/binlog.conf ...
18/Nov/2003 09:36:47 The system is coming up. Please wait...
18/Nov/2003 09:36:47 Checking for crash dumps
18/Nov/2003 09:36:47 Initializing paging space
18/Nov/2003 09:36:47 Mounting Memory filesystems
18/Nov/2003 09:36:51 evmstart: Daemon started
18/Nov/2003 09:36:51 Nov 18 09:36:48 esmd: Started monitoring the EVM daemon
18/Nov/2003 09:36:51 security configuration set to default (BASE).
18/Nov/2003 09:36:51 File /etc/sia/matrix.conf updated successfully.
18/Nov/2003 09:36:51 Successful SIA initialization
18/Nov/2003 09:36:51
18/Nov/2003 09:36:52 /usr/sbin/autopush: Can't push requested modules on STREAM
for entry 36
18/Nov/2003 09:36:52 /usr/sbin/autopush: Device (6,-1) already configured
18/Nov/2003 09:36:52 Streams autopushes configured
18/Nov/2003 09:36:52 Initializing random number driver
18/Nov/2003 09:36:53 CSSM_ModuleLoad: CSSM error 4107
18/Nov/2003 09:36:55 NIFF daemon started
18/Nov/2003 09:36:55 Configuring network
18/Nov/2003 09:36:55 hostname: atlas0
18/Nov/2003 09:36:56 Mounted root1_tmp#tmp on /tmp
18/Nov/2003 09:36:57 Mounted root1_local#local on /local
18/Nov/2003 09:36:58 Mounting advfs member file systems
18/Nov/2003 09:36:58 Loading LMF licenses
18/Nov/2003 09:36:59 System error logger started
18/Nov/2003 09:36:59 add net default: gateway 11.0.24.253
18/Nov/2003 09:37:01 gateway daemon started
18/Nov/2003 09:37:01 Setting kernel timezone variable
18/Nov/2003 09:37:01 Setting the current time and date with ntpdate
18/Nov/2003 09:37:01 Tue Nov 18 09:37:00 EST 2003
18/Nov/2003 09:37:01 Ntpdate succeeded.
18/Nov/2003 09:37:01 starting cluster alias
18/Nov/2003 09:37:01 cluster alias subsystem enabled
18/Nov/2003 09:37:01 enable: reconfigured
18/Nov/2003 09:37:02 aliasd: setting up NIFF monitor for interface ee0
18/Nov/2003 09:37:02 aliasd: setting up NIFF monitor for interface ee1
18/Nov/2003 09:37:02 aliasd: skipping NIFF monitor for interface eip0
18/Nov/2003 09:37:02 aliasd: skipping NIFF monitor for interface eip0
18/Nov/2003 09:37:04 aliasd: skipping NIFF monitor for interface eip0
18/Nov/2003 09:37:04 aliasd: skipping NIFF monitor for interface eip0
18/Nov/2003 09:37:04 gateway daemon started
18/Nov/2003 09:37:07 ONC portmap service started
18/Nov/2003 09:37:07 /usr/sbin/cluster/caa_rollDatastore check called
18/Nov/2003 09:37:08 CAA daemon started
18/Nov/2003 09:37:08 Starting CAA application registration
18/Nov/2003 09:37:09 Global Exec: started gxmgmtd.
18/Nov/2003 09:37:10 Global Exec: started gxclusterd.
18/Nov/2003 09:37:10 Global Exec: started gxnoded.
18/Nov/2003 09:37:12 CMF: console logging daemon does not run on this host
18/Nov/2003 09:37:12 Starting CAA registration of SC15srad
18/Nov/2003 09:37:12 management netmask = 255.255.0.0
18/Nov/2003 09:37:12 management network device = ee0
```

```
18/Nov/2003 09:37:13 timezone = EST
18/Nov/2003 09:37:13 domain = eng.lkg.dec.com
18/Nov/2003 09:37:14 nameserver = 11.0.0.10
18/Nov/2003 09:37:16 starting cfd
18/Nov/2003 09:37:23 gated seems to be hung; killing it
18/Nov/2003 09:37:25 aliasd: skipping NIFF monitor for interface eip0
18/Nov/2003 09:37:25 aliasd: skipping NIFF monitor for interface eip0
18/Nov/2003 09:37:27 aliasd: skipping NIFF monitor for interface eip0
18/Nov/2003 09:37:27 aliasd: skipping NIFF monitor for interface eip0
18/Nov/2003 09:37:29 aliasd: skipping NIFF monitor for interface eip0
18/Nov/2003 09:37:29 aliasd: skipping NIFF monitor for interface eip0
18/Nov/2003 09:37:31 aliasd: skipping NIFF monitor for interface eip0
18/Nov/2003 09:37:33 CAA Profile for srad has been updated
18/Nov/2003 09:37:33 Attempting to start `SC15srad` on member `atlas0`
18/Nov/2003 09:37:33 Start of `SC15srad` on member `atlas0` succeeded.
18/Nov/2003 09:37:34 NIS domain name set to sc
18/Nov/2003 09:37:35 ypserv daemon started
18/Nov/2003 09:37:35 ypbind daemon started
18/Nov/2003 09:37:35 ypbind: Secure mode sunos 3.x servers rejected.
18/Nov/2003 09:37:35 NFS mount daemon started
18/Nov/2003 09:37:35 NFS export service started
18/Nov/2003 09:37:35 Attempting to start `cluster_lockd` on member `atlas0`
18/Nov/2003 09:37:35 cluster NFS Locking:
18/Nov/2003 09:37:35          cluster rpc.statd started
18/Nov/2003 09:37:36          cluster rpc.lockd started
18/Nov/2003 09:37:39 Start of `cluster_lockd` on member `atlas0` succeeded.
18/Nov/2003 09:37:39 NFS IO service started
18/Nov/2003 09:37:39 NFS Locking:
18/Nov/2003 09:37:39   rpc.statd started
18/Nov/2003 09:37:39   rpc.lockd started
18/Nov/2003 09:37:40 Mounting nfs member file systems
18/Nov/2003 09:37:40 scfe0-ext1:/usr/users on /usr/users type nfs (rw,bg)
18/Nov/2003 09:37:40 scfe0-ext1:/kits on /kits type nfs (rw,bg)
18/Nov/2003 09:37:40 atlasms:/var/sra/diag/quadrics on /var/sra/diag/quadrics type
nfs (rw,soft,bg,intr)
18/Nov/2003 09:37:40 Mounting nfsv3 member file systems
18/Nov/2003 09:37:40 NOTE:
18/Nov/2003 09:37:40     Skipping NFS file system entries found in /etc/fstab.
18/Nov/2003 09:37:40
18/Nov/2003 09:37:40     Please migrate the NFS file system entries to the member
18/Nov/2003 09:37:41     specific /etc/member_fstab of the member(s) which should
be
18/Nov/2003 09:37:41     mounting these NFS file systems.
18/Nov/2003 09:37:41
18/Nov/2003 09:37:41 Preserving editor files
18/Nov/2003 09:37:41 Clearing temporary files
18/Nov/2003 09:37:41 Unlocking ptys
18/Nov/2003 09:37:46 Secure Shell daemon (sshd2) started.
18/Nov/2003 09:37:46 SMTP Mail Service started.
18/Nov/2003 09:37:47 Network Time Service started
18/Nov/2003 09:37:47 The SNMP trap to Event Manager interface is disabled.
18/Nov/2003 09:37:47 GS Platform View and Discovery V1.3 for Insight Manager is
only supported on Alpha GS series platforms.
```

```
18/Nov/2003 09:37:47 Internet services provided.
18/Nov/2003 09:37:48 clustercron entry started
18/Nov/2003 09:37:48 Cron service started
18/Nov/2003 09:37:52 rms: RMS service started on atlas0
18/Nov/2003 09:37:52 Binary error logger started
18/Nov/2003 09:37:53 CFS load monitoring (cfsd) started
18/Nov/2003 09:37:53 CAA Applications now started
18/Nov/2003 09:37:53 cluster wall daemon started
18/Nov/2003 09:37:54 Starting Cluster Configuration Check...
18/Nov/2003 09:37:56
18/Nov/2003 09:37:56 The boottime cluster check found a potential problem.
18/Nov/2003 09:37:56 For details search for !!!!!ATTENTION!!!!! in /cluster/admin/
clu_check_log_atlas0
18/Nov/2003 09:37:56 check_cdsl_config : Boot Mode : Running /usr/sbin/cdslinvchk
in the background
18/Nov/2003 09:37:56 check_cdsl_config : Results can be found in : /var/adm/
cdsl_check_list
18/Nov/2003 09:37:57 clu_check_config : detected one or more configuration errors
18/Nov/2003 09:37:59 Enabling SCFS Serving on node atlas0.
18/Nov/2003 09:37:59 scmon: daemon started
18/Nov/2003 09:37:59 scmountd: not necessary to run on this node
18/Nov/2003 09:37:59 The system is ready.
18/Nov/2003 09:38:00
18/Nov/2003 09:38:00
18/Nov/2003 09:38:00
18/Nov/2003 09:38:00 Compaq Tru64 UNIX V5.1B (Rev. 2650) (atlas0) console
18/Nov/2003 09:38:00
18/Nov/2003 09:38:47 login:
```

F.2 Startup Messages After Adding a Domain Member

Example F–2 shows a transcript of a portion of the startup messages displayed during a boot of the second cluster member system after running `sra install -node atlas1`. This information is also sent to `/var/adm/syslog.dated/date/kern.log`.

Example F–2 Startup Messages After Adding a Domain Member

```
19/Nov/2003 13:28:05 P00>>>boot dka0 -file vmunix
19/Nov/2003 13:28:05 (boot dka0.0.0.2.1 -file vmunix -flags A)
19/Nov/2003 13:28:05 block 0 of dka0.0.0.2.1 is a valid boot block
19/Nov/2003 13:28:05 reading 19 blocks from dka0.0.0.2.1
19/Nov/2003 13:28:05 bootstrap code read in
19/Nov/2003 13:28:05 base = 200000, image_start = 0, image_bytes = 2600(9728)
19/Nov/2003 13:28:05 initializing HWRPB at 2000
19/Nov/2003 13:28:05 initializing page table at 3ff56000
19/Nov/2003 13:28:05 initializing machine state
19/Nov/2003 13:28:05 setting affinity to the primary CPU
19/Nov/2003 13:28:05 jumping to bootstrap code
19/Nov/2003 13:28:07
19/Nov/2003 13:28:07 UNIX boot - Wednesday October 16, 2002
19/Nov/2003 13:28:07
19/Nov/2003 13:28:07 Loading vmunix ...
19/Nov/2003 13:28:08 Loading at 0xfffffc0000230000
19/Nov/2003 13:28:08
19/Nov/2003 13:28:08 Sizes:
19/Nov/2003 13:28:08 text =  9403584
19/Nov/2003 13:28:11 data =  2383232
19/Nov/2003 13:28:12 bss  =  2559232
19/Nov/2003 13:28:12 Starting at 0xfffffc00002439c0
19/Nov/2003 13:28:12
19/Nov/2003 13:28:13 Loading vmunix symbol table ... [2317024 bytes]
19/Nov/2003 13:28:14 Memory trolling not supported, cpu Major id 13, Minor id 3
19/Nov/2003 13:28:22 Alpha boot: available memory from 0x38cc000 to 0xffff4000
19/Nov/2003 13:28:22 Compaq Tru64 UNIX V5.1B (Rev. 2650); Tue Nov 18 10:12:23 EST
2003
19/Nov/2003 13:28:22 physical memory = 4096.00 megabytes.
19/Nov/2003 13:28:22 available memory = 3968.13 megabytes.
19/Nov/2003 13:28:22 using 15658 buffers containing 122.32 megabytes of memory
19/Nov/2003 13:28:23 Master cpu at slot 0
19/Nov/2003 13:28:23 Starting secondary cpu 1
19/Nov/2003 13:28:23 Starting secondary cpu 2
19/Nov/2003 13:28:23 Starting secondary cpu 3
19/Nov/2003 13:28:23 Firmware revision: 6.4-17
19/Nov/2003 13:28:23 PALcode: UNIX version 1.91-104
19/Nov/2003 13:28:23 AlphaServer ES40
19/Nov/2003 13:28:23 pci1 (primary bus:1) at nexus
19/Nov/2003 13:28:23 pci2 (primary bus:1 subordinate bus:2) at pci1 slot 1
19/Nov/2003 13:28:23 ee0 at pci2 slot 4
19/Nov/2003 13:28:23 ee0: COMPAQ Intel 82558 (10/100 Mbps) Ethernet Interface
19/Nov/2003 13:28:23 ee0: Driver Rev = V1.0.23, Chip Rev = 5, hardware address:
00-02-A5-6B-22-AC
```

```
19/Nov/2003 13:28:23 ee1 at pci2 slot 5
19/Nov/2003 13:28:24 ee1: COMPAQ Intel 82558 (10/100 Mbps) Ethernet Interface
19/Nov/2003 13:28:24 ee1: Driver Rev = V1.0.23, Chip Rev = 5, hardware address:
00-02-A5-6B-22-AD
19/Nov/2003 13:28:24 itpsa0 at pci1 slot 2
19/Nov/2003 13:28:24 IntraServer ROM Version V2.0 (c)1998
19/Nov/2003 13:28:25 ee0: Autonegotiated, 100 Mbps full duplex
19/Nov/2003 13:28:25 ee1: Autonegotiated, 100 Mbps full duplex
19/Nov/2003 13:28:28 scsi0 at itpsa0 slot 0 rad 0
19/Nov/2003 13:28:28 emx0 at pci1 slot 3
19/Nov/2003 13:28:28 KGPSA-CA : Driver Rev 2.10 : F/W Rev 3.81A4(2.01A0) : wwn
1000-0000-c922-4ad5
19/Nov/2003 13:28:28 emx0: Using console topology setting of : Fabric
19/Nov/2003 13:28:28 scsi1 at emx0 slot 0 rad 0
19/Nov/2003 13:28:28 emx2 at pci1 slot 4
19/Nov/2003 13:28:28 KGPSA-CA : Driver Rev 2.10 : F/W Rev 3.81A4(2.01A0) : wwn
1000-0000-c922-4627
19/Nov/2003 13:28:28 emx2: Using console topology setting of : Fabric
19/Nov/2003 13:28:28 scsi2 at emx2 slot 0 rad 0
19/Nov/2003 13:28:29 pci0 (primary bus:0) at nexus
19/Nov/2003 13:28:29 elan0: Device revision = 1 (Rev B)
19/Nov/2003 13:28:29 elan0: QSW Elan3 PCI Network Adaptor
19/Nov/2003 13:28:29 elan0: Serial Number - 438
19/Nov/2003 13:28:29 elan0: memory bank 0 is 32768K
19/Nov/2003 13:28:34 elan0: memory bank 1 is 32768K
19/Nov/2003 13:28:43 elan30 at pci0 slot 3
19/Nov/2003 13:28:43 isa0 at pci0
19/Nov/2003 13:28:43 gpc0 at isa0
19/Nov/2003 13:28:43 gpc1 not probed
19/Nov/2003 13:28:43 ace0 at isa0
19/Nov/2003 13:28:43 ace1 at isa0
19/Nov/2003 13:28:43 jtag0 at isa0
19/Nov/2003 13:28:43 fdi0 at isa0
19/Nov/2003 13:28:43 fd0 at fdi0 unit 0
19/Nov/2003 13:28:43 ata0 at pci0 slot 15
19/Nov/2003 13:28:43 ata0: ACER M1543C
19/Nov/2003 13:28:45 scsi3 at ata0 slot 0 rad 0
19/Nov/2003 13:28:45 scsi4 at ata0 slot 1 rad 0
19/Nov/2003 13:28:45 usb0 at pci0 slot 19
19/Nov/2003 13:28:45 Created FRU table binary error log packet
19/Nov/2003 13:28:45 kernel console: ace0
19/Nov/2003 13:28:45 dli: configured
19/Nov/2003 13:28:45 NetRAIN configured.
19/Nov/2003 13:28:46 Random number generator configured.
19/Nov/2003 13:28:46 ATM Subsystem configured with 4 restart threads
19/Nov/2003 13:28:46 ATMUNI: configured
19/Nov/2003 13:28:46 ATMSIG: 3.x (module=uni3x) configured
19/Nov/2003 13:28:46 ILMI: 3.x (module=ilmi) configured
19/Nov/2003 13:28:46 ATM IP: configured
19/Nov/2003 13:28:46 ATM LANE: configured.
19/Nov/2003 13:28:46 ATM IFMP: configured
19/Nov/2003 13:28:46 elan0: nodeid=1 level=3 numnodes=128
```

```
19/Nov/2003 13:28:46 TruCluster Server V5.1-SC-V2.6-BL5-3320-EAGLE  (Rev. 13320);
11/16/03 01:44
19/Nov/2003 13:28:46 elan0: waiting for network position to be found
19/Nov/2003 13:28:46 elan0: nodeid=1 level=3 numnodes=128
19/Nov/2003 13:28:46 elan0: Online  [1]
19/Nov/2003 13:28:46 elan0: Nodeset [1]
19/Nov/2003 13:28:46 elan0: network position found at nodeid 1
19/Nov/2003 13:28:46 eip: checksums disabled - all other nodes must also disable
checksums
19/Nov/2003 13:28:46 eip: Elan IP initialized
19/Nov/2003 13:28:46 TNC kproc_creator_daemon: Initialized and Ready
19/Nov/2003 13:28:46 clubase: configured
19/Nov/2003 13:28:46 icsnet: configured
19/Nov/2003 13:28:46 drd configured 0
19/Nov/2003 13:28:46 kch: configured
19/Nov/2003 13:28:47 dlm: configured
19/Nov/2003 13:28:47 Starting CFS daemons
19/Nov/2003 13:28:47 Registering CFS Services
19/Nov/2003 13:28:47 Initializing CFSREC ICS Service
19/Nov/2003 13:28:47 Registering CFSMSFS remote syscall interface
19/Nov/2003 13:28:47 Registering CMS Services
19/Nov/2003 13:28:47 elan0: Restart Request from [0-0][2-3]
19/Nov/2003 13:28:47 ep_enable_cluster_protocols: no longer implemented
19/Nov/2003 13:28:47 ics_elan: seticsinfo: [elan node 1] <=> [ics node 2]
21/Nov/2003 16:43:29 elan0: Online Ack from [0-0][2-3]
21/Nov/2003 16:43:29 elan0: Online  [0,2-3]
21/Nov/2003 16:43:29 elan0: Nodeset [0-1]
19/Nov/2003 13:28:49 ics_elan: seticsinfo: [elan node 128] <=> [ics node 1]
19/Nov/2003 13:28:49 CNX MGR: Join operation complete
19/Nov/2003 13:28:49 CNX MGR: membership configuration index: 64 (34 additions, 30
removals)
19/Nov/2003 13:28:49 CNX MGR: quorum (re)gained, (re)starting cluster operations.
19/Nov/2003 13:28:49 Joining versw kch set.
19/Nov/2003 13:28:49 CNX MGR: Node atlas0 1 incarn 0x8ae4 csid 0x10001 has been
added to the cluster
19/Nov/2003 13:28:50 CNX MGR: Node atlas1 2 incarn 0xf385e csid 0x80004 has been
added to the cluster
19/Nov/2003 13:28:50 dlm: resuming lock activity
19/Nov/2003 13:28:50 kch: resuming activity
19/Nov/2003 13:28:50 scsi0: SCSI Bus was reset
19/Nov/2003 13:28:50 cam_logger: SCSI event packet
19/Nov/2003 13:28:50 cam_logger: bus 0
19/Nov/2003 13:28:50 itpsa SCSI HBA
19/Nov/2003 13:28:50 SCSI Bus was reset
19/Nov/2003 13:28:50
19/Nov/2003 13:28:51 scsi0: SCSI Bus was reset
19/Nov/2003 13:28:51 cam_logger: SCSI event packet
19/Nov/2003 13:28:51 cam_logger: bus 0
19/Nov/2003 13:28:51 itpsa SCSI HBA
19/Nov/2003 13:28:51 SCSI Bus was reset
19/Nov/2003 13:28:51
19/Nov/2003 13:28:51 clsm: incoming CNX data: 'a'
19/Nov/2003 13:28:51 clsm: checking for peer configurations
```

Startup Messages After Adding a Domain Member

```
19/Nov/2003 13:28:51 clsm: initialized
19/Nov/2003 13:28:52 Waiting for cluster mount to complete
19/Nov/2003 13:28:53 SCFS: SCFS/Elan Services Initialised on node 1(0x1) railmask
0x1
19/Nov/2003 13:28:54 vm_swap_init: swap is set to eager allocation mode
19/Nov/2003 13:28:55 CMS: Joining deferred filesystem sets
19/Nov/2003 13:28:55 Checking device naming:
19/Nov/2003 13:28:56     Passed.
19/Nov/2003 13:28:56 Checking local filesystems
19/Nov/2003 13:28:56 Mounting / (root)
19/Nov/2003 13:28:56 user_cfg_pt: reconfigured
19/Nov/2003 13:28:57 root_mounted_rw: reconfigured
19/Nov/2003 13:28:57 Mounting /cluster/members/member2/boot_partition (boot
filesystem)
19/Nov/2003 13:28:57 user_cfg_pt: reconfigured
19/Nov/2003 13:28:57 root_mounted_rw: reconfigured
19/Nov/2003 13:28:57 user_cfg_pt: reconfigured
19/Nov/2003 13:28:58 dsfmgr: NOTE: updating kernel basenames for system at /
19/Nov/2003 13:28:58     scp kevm tty00 tty01 random urandom dsk4 dsk5 dsk6 scp0
scp1 scp2 dsk26 dsk27 dsk28 floppy2 cdrom2
19/Nov/2003 13:28:59 Mounting local filesystems
19/Nov/2003 13:28:59 exec: /sbin/mount_advfs -F 0x14000 cluster_root#root /
19/Nov/2003 13:28:59 cluster_root#root on / type advfs (rw)
19/Nov/2003 13:28:59 exec: /sbin/mount_advfs -F 0x4000 cluster_usr#usr /usr
19/Nov/2003 13:28:59 cluster_usr#usr on /usr: Device busy
19/Nov/2003 13:28:59 exec: /sbin/mount_advfs -F 0x4000 cluster_var#var /var
19/Nov/2003 13:28:59 cluster_var#var on /var: Device busy
19/Nov/2003 13:28:59 /proc on /proc type procfs (rw)
19/Nov/2003 13:29:00 Nov 19 13:28:59 esmd: Essential Services Monitor daemon
started
19/Nov/2003 13:29:00 Subsystem hwautoconfig was successfully configured.
19/Nov/2003 13:29:00 Subsystem pfs was successfully configured.
19/Nov/2003 13:29:00 Subsystem shmem was successfully configured.
19/Nov/2003 13:29:00 Environmental Monitoring Subsystem Configured.
19/Nov/2003 13:29:00 Subsystem envmon was successfully configured.
19/Nov/2003 13:29:00 Nov 19 13:29:00 update: started
19/Nov/2003 13:29:02
19/Nov/2003 13:29:02 Checking for Installation Tasks...
19/Nov/2003 13:29:03
19/Nov/2003 13:29:03 Executing Installation Tasks...
19/Nov/2003 13:29:04 The system is coming up. Please wait...
19/Nov/2003 13:29:04 Checking for crash dumps
19/Nov/2003 13:29:04 Initializing paging space
19/Nov/2003 13:29:05 Mounting Memory filesystems
19/Nov/2003 13:29:08 evmstart: Daemon started
19/Nov/2003 13:29:09 Nov 19 13:29:08 esmd: Started monitoring the EVM daemon
19/Nov/2003 13:29:09 security configuration set to default (BASE).
19/Nov/2003 13:29:09 File /etc/sia/matrix.conf updated successfully.
19/Nov/2003 13:29:09 Successful SIA initialization
19/Nov/2003 13:29:09
19/Nov/2003 13:29:09 /usr/sbin/autopush: Can't push requested modules on STREAM
for entry 36
19/Nov/2003 13:29:09 /usr/sbin/autopush: Device (6,-1) already configured
```

```
19/Nov/2003 13:29:09 Streams autopushes configured
19/Nov/2003 13:29:10 CSSM_ModuleLoad: CSSM error 4107
19/Nov/2003 13:29:12 NIFF daemon started
19/Nov/2003 13:29:12 Configuring network
19/Nov/2003 13:29:12 hostname: atlas1
19/Nov/2003 13:29:16 Mounted root2_tmp#tmp on /tmp
19/Nov/2003 13:29:17 Mounted root2_local#local on /local
19/Nov/2003 13:29:18 Mounting advfs member file systems
19/Nov/2003 13:29:18 Loading LMF licenses
19/Nov/2003 13:29:20 System error logger started
19/Nov/2003 13:29:20 add net default: gateway 11.0.24.253
19/Nov/2003 13:29:20 gateway daemon started
19/Nov/2003 13:29:20 Setting kernel timezone variable
19/Nov/2003 13:29:20
19/Nov/2003 13:29:20 Setting the current time and date with ntpdate
19/Nov/2003 13:29:25 Wed Nov 19 13:29:25 EST 2003
19/Nov/2003 13:29:25 Ntpdate succeeded.
19/Nov/2003 13:29:25
19/Nov/2003 13:29:25 starting cluster alias
19/Nov/2003 13:29:25 cluster alias subsystem enabled
19/Nov/2003 13:29:25 enable: reconfigured
19/Nov/2003 13:29:27 aliasd: setting up NIFF monitor for interface ee0
19/Nov/2003 13:29:27 aliasd: setting up NIFF monitor for interface ee1
19/Nov/2003 13:29:27 aliasd: skipping NIFF monitor for interface eip0
19/Nov/2003 13:29:27 aliasd: skipping NIFF monitor for interface eip0
19/Nov/2003 13:29:29 aliasd: skipping NIFF monitor for interface eip0
19/Nov/2003 13:29:29 aliasd: skipping NIFF monitor for interface eip0
19/Nov/2003 13:29:29 gateway daemon started
19/Nov/2003 13:29:36
19/Nov/2003 13:29:36 ONC portmap service started
19/Nov/2003 13:29:36 /usr/sbin/cluster/caa_rollDatastore check called
19/Nov/2003 13:29:37 CAA daemon started
19/Nov/2003 13:29:38 Nov 19 13:29:38 atlas1 vmunix: arp: local IP address
10.128.106.2 in use by hardware address 00-02-A5-6B-28-7C
19/Nov/2003 13:29:38 Global Exec: started gxmgmtd.
19/Nov/2003 13:29:39 Global Exec: started gxclusterd.
19/Nov/2003 13:29:39 Global Exec: started gxnoded.
19/Nov/2003 13:29:42 CMF: console logging daemon does not run on this host
19/Nov/2003 13:29:48 gated seems to be hung; killing it
19/Nov/2003 13:29:50 aliasd: skipping NIFF monitor for interface eip0
19/Nov/2003 13:29:50 aliasd: skipping NIFF monitor for interface eip0
19/Nov/2003 13:29:52 aliasd: skipping NIFF monitor for interface eip0
19/Nov/2003 13:29:53 aliasd: skipping NIFF monitor for interface eip0
19/Nov/2003 13:29:54 aliasd: skipping NIFF monitor for interface eip0
19/Nov/2003 13:29:54 aliasd: skipping NIFF monitor for interface eip0
19/Nov/2003 13:29:56 aliasd: skipping NIFF monitor for interface eip0
19/Nov/2003 13:30:05
19/Nov/2003 13:30:35
19/Nov/2003 13:30:50 CAA Profile for srad has been updated
19/Nov/2003 13:30:50 Resource SC15srad is already running on member atlas0
19/Nov/2003 13:30:50 CAA cannot start a resource twice.
19/Nov/2003 13:30:51 NIS domain name set to sc
19/Nov/2003 13:30:52 ypserv daemon started
```

Startup Messages After Adding a Domain Member

```
19/Nov/2003 13:30:52 ypbind: Secure mode sunos 3.x servers rejected.
19/Nov/2003 13:30:52 ypbind daemon started
19/Nov/2003 13:30:52 NFS mount daemon started
19/Nov/2003 13:30:52 NFS export service started
19/Nov/2003 13:30:53 Resource cluster_lockd is already running on member atlas0
19/Nov/2003 13:30:53 CAA cannot start a resource twice.
19/Nov/2003 13:30:53 NFS IO service started
19/Nov/2003 13:30:53 NFS Locking:
19/Nov/2003 13:30:53   rpc.statd started
19/Nov/2003 13:30:53   rpc.lockd started
19/Nov/2003 13:30:54 Mounting nfs member file systems
19/Nov/2003 13:30:54 Mounting nfsv3 member file systems
19/Nov/2003 13:30:54 NOTE:
19/Nov/2003 13:30:54     Skipping NFS file system entries found in /etc/fstab.
19/Nov/2003 13:30:54
19/Nov/2003 13:30:54     Please migrate the NFS file system entries to the member
19/Nov/2003 13:30:54     specific /etc/member_fstab of the member(s) which should
be
19/Nov/2003 13:30:54     mounting these NFS file systems.
19/Nov/2003 13:30:54
19/Nov/2003 13:30:54 Preserving editor files
19/Nov/2003 13:30:54 Clearing temporary files
19/Nov/2003 13:30:55 Unlocking ptys
19/Nov/2003 13:31:00 Secure Shell daemon (sshd2) started.
19/Nov/2003 13:31:00 SMTP Mail Service started.
19/Nov/2003 13:31:01 Network Time Service started
19/Nov/2003 13:31:01 The SNMP trap to Event Manager interface is disabled.
19/Nov/2003 13:31:01 GS Platform View and Discovery V1.3 for Insight Manager is
only supported on Alpha GS series platforms.
19/Nov/2003 13:31:02 Internet services provided.
19/Nov/2003 13:31:02 removing cron
19/Nov/2003 13:31:02 Cron service started
19/Nov/2003 13:31:06
19/Nov/2003 13:31:06 rms: RMS service started on atlas1
19/Nov/2003 13:31:07 Binary error logger started
19/Nov/2003 13:31:07 CFS load monitoring (cfsd) started
19/Nov/2003 13:31:07 CAA Applications now started
19/Nov/2003 13:31:07 cluster wall daemon started
19/Nov/2003 13:31:09 Starting Cluster Configuration Check...
19/Nov/2003 13:31:32
19/Nov/2003 13:31:32 The boottime cluster check found a potential problem.
19/Nov/2003 13:31:33 For details search for !!!!!ATTENTION!!!!! in /cluster/admin/
clu_check_log_atlas1
19/Nov/2003 13:31:33 check_cdsl_config : Boot Mode : Running /usr/sbin/cdslinvchk
in the background
19/Nov/2003 13:31:33 check_cdsl_config : Results can be found in : /var/adm/
cdsl_check_list
19/Nov/2003 13:31:34 clu_check_config : detected one or more configuration errors
19/Nov/2003 13:31:35
19/Nov/2003 13:31:37 Enabling SCFS Serving on node atlas1.
19/Nov/2003 13:31:37 scmon: daemon started
19/Nov/2003 13:31:38 scmountd: not necessary to run on this node
19/Nov/2003 13:31:38 The system is ready.
```

```
19/Nov/2003 13:31:38
19/Nov/2003 13:31:38
19/Nov/2003 13:31:38
19/Nov/2003 13:31:38 Compaq Tru64 UNIX V5.1B (Rev. 2650) (atlas1) console
19/Nov/2003 13:31:38
19/Nov/2003 13:32:01 login:
```

G

Cluster-Aliases and External Networks in the 10.*x.x.x* Range

In cases where the addressing scheme on the external LAN needs to be within the 10.*x.x.x* range, you must change the addressing scheme of both the internal management LAN and the HP AlphaServer SC Interconnect to use the 172.*x.x.x* notation.

Table G–1 displays the network address convention used for these networks and attached devices. Use the address notation in Table G–1 during the `sysman` (Section 6.1.4.2) and `sra setup` (Section 6.2) stages of the HP AlphaServer SC installation.

Table G–1 Alternative HP AlphaServer SC IP Addresses

Component	IP Address Range
Net mask	`255.255.0.0`
Cluster Interconnect (IP suffix: `-ics0`) for node *n*, where *n* is 0-127	`172.20.0.(`*n*`+1)`
System Interconnect (IP suffix: `-eip0`) for node *n*, where *n* is 0-127	`172.24.0.(`*n*`+1)`
Management network interface card for node *n*, where *n* is 0-127	`172.28.0.(`*n*`+1)`
Terminal server *t*, where *t* is 1–254	`172.28.100.`*t*
Management server *m* on management LAN, where *m* is 1–2	`172.28.101.`*m*
Management server *m* Cluster Interconnect (IP suffix: `-ics0`)	`172.22.0.`*m*
Management server *m* Gigabit Interconnect (IP suffix: `-icstcp0`)	`172.23.0.`*m*
HP AlphaServer SC Interconnect switch JTAG port *j*, where *j* is 1–48	`172.28.102.`*j*
Summit switch *s*, where *s* is 1–254	`172.28.103.`*s*
HP SANworks Management Appliance or Fibre Channel switch *f*, where *f* is 1-254	`172.28.104.`*f*
RAID array controller *c*, where *c* is 1, 2, and so on	`172.28.105.`*c*

Table G–1 Alternative HP AlphaServer SC IP Addresses

Component	IP Address Range
HP AlphaServer SC Interconnect Control Card for Node-Level switch *N*, where *r* is the rail number and *N* is 0-31	`172.28.(128+r).(N +1)`
HP AlphaServer SC Interconnect Control Card for Top-Level switch *T*, where *r* is the rail number and *T* is 0-15	`172.28.(128+r).(T +128)`
Preferred server cluster alias addresses (where *FS* is 0-3, thus accomodating a maximum of four FS domains, and *y* is the member ID within the FS domain)	`172.28.(106+FS).y`

H

Configuring Networker for HP AlphaServer SC

The Networker software is a suite of storage management software that provides backup and recovery mechanisms for your data. One machine is designated to be your Networker Server which provides control and scheduling for Networker operations. All of the other machines are Network clients which provide recover and on-demand backup functionality.

This appendix describes how to install and configure the Networker software and contains the following sections:

- Domains as a Client of a Corporate Networker Server (see Section H.1 on page H–2)
- Domains as the Networker Server (see Section H.2 on page H–5)

H.1 Domains as a Client of a Corporate Networker Server

H.1.1 Installing the Networker Client Software on the Cluster

1. Install the Networker client on `atlas` as follows:

   Mount the CD-ROM as follows:

   a. Create a mount point for the CD-ROM, by running the following command:
      ```
      atlasms# mkdir /cdrom
      ```

   b. Mount the CD-ROM as follows:
      ```
      atlasms# mount -r /dev/disk/cdrom0c /cdrom
      ```

   Change to the directory in which the kits are stored, as follows:

   ```
   atlasms# cd /cdrom/NetWorker/kit
   ```

   Install the software, as follows:

   ```
   atlasms# setld -l .
   ```

   Note:

   This step installs the software on every node within the cluster (including `atlas0`).

2. When installing the server software, accept all of the default questions:

```
    1) Legato Networker Basic Client
    2) Legato Networker Driver & Storage Node
    3) Legato Networker Manpages
    4) Legato Networker Server

Or you may choose one of the following options:

     5) ALL of the above
     6) CANCEL selections and redisplay menus
     7) EXIT without installing any subsets

Estimated free diskspace(MB) in root:332.7 usr:2501.1 var:1648.1

Enter your choices or press RETURN to redisplay menus.

Choices (for example, 1 2 4-6): 1
```

   – Location of Networker database:

```
Enter the location for this Client's NetWorker home directory
(it must sit on a local disk!) [ /var/nsr ]:
/var/nsr
```

– List of servers:

  atlasD0

Note:

Ensure that each member of the cluster is added to ensure that failover to another node operates correctly.

Note:

When installing Networker, the software does not start up all the daemons on atlas0. It will only start the client daemons, and will do this on every node on the cluster.

3. After setld has completed, run the following script on every node in the cluster:

   /usr/opt/networker/bin/networker.cluster

Note:

This script may fail and requires some manual updates as described in Step 4.

4. Edit the script as follows:

   Before:

   ```
   CLUINFO="`setld -i | grep "TCRBASE.*installed" | awk '/TCRBASE/ { print $1 }'`"
   ```

   After:

   ```
   CLUINFO="`setld -i | grep '^TCRBASE.*installed' | awk '/TCRBASE/ { print $1 }'`"
   ```

H.1.2 Adding Domains as a Client of Corporate Networker Server

In this example, the cluster alias is atlasD0, and the client of a corporate Networker Server (gibbnew). To configure the domain as a client of the corporate Networker Server:

1. Add atlasD0 to gibbnew as a client
2. Back up the following partitions on atlasD0

   ```
   /one_node_advfs
   /two_node_advfs
   /two_node_pfs
   ```

3. Add each member of the `atlasD0` cluster to the remote-access list on the client in Networker. If this step is not performed, the backup will not be successful.

   ```
   atlas0-ext1
   ```

4. Edit the `/.rhosts` file on `atlas0` to include the Networker server, by adding the following:

   ```
   gibbnew
   gibbnew.ilo.dec.com
   ```

Note:

Stopping and starting Networker takes a few minutes when Networker is installed on a cluster.

H.2 Domains as the Networker Server

In this example, the Networker Server is installed on domains. To configure the domain as the Networker Server:

1. Install the SCSI single-ended card into `atlas1`
2. Connect the SCSI tape drive to the cluster (for example, connect the drive to `atlas1`)
3. Reboot on `genvmunix`
4. Rebuild the kernel to boot the machine.
5. Install the Networker Server and client on `atlas` as follows**:**

   Mount the CD-ROM as follows:

   a. Create a mount point for the CD-ROM, by running the following command:
   `atlasms#` **`mkdir /cdrom`**

   b. Mount the CD-ROM as follows:
   `atlasms#` **`mount -r /dev/disk/cdrom0c /cdrom`**

   Change to the directory in which the kits are stored, as follows:

   ```
   atlasms# cd /cdrom/NetWorker/kit
   ```

   Install the software, as follows:

   ```
   atlasms# setld -l .
   ```

   Note:

   This step installs the software on every node within the cluster (including `atlas0`).

6. When installing the server software, accept all of the default questions:

```
     1) Legato Networker Basic Client
     2) Legato Networker Driver & Storage Node
     3) Legato Networker Manpages
     4) Legato Networker Server

Or you may choose one of the following options:

     5) ALL of the above
     6) CANCEL selections and redisplay menus
     7) EXIT without installing any subsets

Estimated free diskspace(MB) in root:332.7 usr:2501.1 var:1648.1

Enter your choices or press RETURN to redisplay menus.

Choices (for example, 1 2 4-6): 5
```

– Location of Networker database:

```
Enter the location for this Client's NetWorker home directory
(it must sit on a local disk!) [ /var/nsr ]:
/var/nsr
```

– List of servers:

```
atlasD0
```

Note:

Ensure that each member of the cluster is added to ensure that failover to another node operates correctly.

Note:

When installing Networker, the software does not start up all the daemons on `atlas0`. It will only start the client daemons, and will do this on every node on the cluster.

7. After `setld` has completed, run the following script on every node in the cluster:

```
/usr/opt/networker/bin/networker.cluster
```

Note:

This script may fail and requires some manual updates as described in Step 8.

8. Edit the script as follows:

   Before:

```
CLUINFO="`setld -i | grep "TCRBASE.*installed" | awk '/TCRBASE/ { print $1 }'`"
```

   After:

```
CLUINFO="`setld -i | grep '^TCRBASE.*installed' | awk '/TCRBASE/ { print $1 }'`"
```

9. When this script has run to completion, register the Networker software within `caa`, by entering the following:

```
caa_register networker
caa_start networker
```

   If you prefer to specify the node on which to start the Networker software (for example, `atlas0`), enter the following command:

```
caa_start networker -c atlas0
```

10. Install the tape drive by running the following command:

    /usr/opt/networker/bin/jbconfig

    The options vary depending on the type of tape drive and also on whether it is SCSI or fibre. Ensure the that you assign the following no-rewind tape device:

    /dev/ntape/tape0

    Note:

    It is recommended to start nwadmin on the same node running the server. Initially, start nwadmin on the node running the daemon, and edit the server setup to change the authorized list of users to add root@atlas0 (if the daemon is running on atlas1). An entry should be included for each node within the cluster.

    ---

11. Start nwadmin as follows:

    /usr/opt/networker/bin/nwadmin

12. Select your backup preferences as follows:
    - Full or Incremental
    - Tape Name (pool names)

    For more information, refer to the Networker documentation. It is recommended to create a default tape, a full tape, and an incremental tape.

13. Set up the following:
    - Registration (license)
    - Label_templates
    - Groups
    - Pools
    - Server setup
    - Client setup

H.3 Sample Output

```
atlas0 # cd /cdrom/NetWorker/kit
atlas0 # setld -i . l .

The subsets listed below are optional:

     There may be more optional subsets than can be presented on a single
     screen. If this is the case, you can choose subsets screen by screen
     or all at once on the last screen. All of the choices you make will
     be collected for your confirmation before any subsets are installed.

     1) Legato Networker Basic Client
     2) Legato Networker Driver & Storage Node
     3) Legato Networker Manpages
     4) Legato Networker Server

Or you may choose one of the following options:

     5) ALL of the above
     6) CANCEL selections and redisplay menus
     7) EXIT without installing any subsets

Estimated free diskspace(MB) in root:332.7 usr:2501.1 var:1648.1

Enter your choices or press RETURN to redisplay menus.

Choices (for example, 1 2 4-6): 5

You are installing the following optional subsets:

        Legato Networker Basic Client
        Legato Networker Driver & Storage Node
        Legato Networker Manpages
        Legato Networker Server

Estimated free diskspace(MB) in root:332.7 usr:2407.0 var:1648.1

Is this correct? (y/n): y

Checking file system space required to install selected subsets:

File system space checked OK.

4 subsets will be installed.

Loading subset 1 of 4 ...

This subset may take some time to complete.

Legato Networker Basic Client
   Copying from . (disk)
```

```
   Verifying

Loading subset 2 of 4 ...

This subset may take some time to complete.

Legato Networker Driver & Storage Node
   Copying from . (disk)
        Working....Tue Aug  6 10:33:58 IST 2002
   Verifying

Loading subset 3 of 4 ...

This subset may take some time to complete.

Legato Networker Manpages
   Copying from . (disk)
   Verifying

Loading subset 4 of 4 ...

This subset will take some time to complete.

Legato Networker Server
   Copying from . (disk)
        Working....Tue Aug  6 10:34:26 IST 2002
   Verifying

4 of 4 subsets installed successfully.

Configuring "Legato Networker Basic Client" (LGTOCLNT600) on member0

Legato Networker Basic Client

Copyright (c) 1990-2000, Legato Systems, Inc.

************ File Configuration on NetWorker Client ***********

/nsr not found!

Enter the location for this Client's NetWorker home directory
(it must sit on a local disk!) [ /var/nsr ]:

The installation procedure adds entries to the /etc/rpc and
/etc/syslog.conf files on the NetWorker server; the original
files are renamed and saved. The installation also creates
the /sbin/init.d/NSRstartstop file.

Do you wish to continue? (y/n) [ y ]: y
Modifying /etc/rpc
Modifying /etc/syslog.conf
* * * Restarting syslog daemon * * *
Do you wish to remove the saved files? (y/n) [ n ]:
```

Sample Output

```
The modified files were saved and

                                renamed as follows:

File                 Location of saved file
----                 ----------------------
/etc/rpc            /etc/rpc_nsrsave
/etc/syslog.conf   /etc/syslog.conf_nsrsave

Creating /sbin/init.d/NSRstartstop

Starting nsrexecd...

 The nsr/res/servers file will need to be updated with
 the list of servers that will back up this system as
 as a client.
 This is also needed if this machine is to be used
 as an HSM client.

 /nsr/res/servers file does not exist..


 Do you wish to create the file? (y/n):y

Creating a new /nsr/res/servers file..


Creation of /nsr/res/servers file done...

Enter one server name per prompt. eg: atom or atom.loc.xyz.com
Enter <CR> to terminate the list.

Please enter the name of a server to back up to (or <CR> to end):
atlasD0
Please enter the name of a server to back up to (or <CR> to end):


Do you want to stop and restart nsrexecd? (y/n): y
Starting nsrexecd...


LGTOCLNT600 software installed successfully

The Legato NetWorker Client version 600 binaries have been installed in
/usr/opt/networker/bin.  Please update the PATH environment
variable to include /usr/opt/networker/bin.


*******************************************************************************

Configuring "Legato Networker Driver & Storage Node" (LGTONODE600) on member0
```

```
Legato Networker Driver & Storage Node

Copyright (c) 1990-2000, Legato Systems, Inc.
Starting nsrexecd...


LGTONODE600 software installed successfully

The Legato NetWorker Storage Node version 600 binaries have been installed
in /usr/opt/networker/bin. Please update the PATH environment
variable to include /usr/opt/networker/bin.

******************************************************************************

Configuring "Legato Networker Manpages" (LGTOMAN600) on member0

Legato Networker Manpages
Copyright (c) 1990-2000, Legato Systems, Inc.
LGTOMAN600 software installed successfully

The Manpages are installed in the following locations:

 /usr/opt/networker/man/man3
 /usr/opt/networker/man/man5
 /usr/opt/networker/man/man8

Please update the MANPATH environment variable to include the path
/usr/opt/networker/man.

******************************************************************************

Configuring "Legato Networker Server" (LGTOSERV600) on member0

Legato Networker Server

Copyright (c) 1990-2000, Legato Systems, Inc.

************ File Configuration on NetWorker Server ***********

starting nsrd...
NetWorker icon has been successfully installed into CDE.


LGTOSERV600 software installed successfully

The Legato NetWorker Server version 600 binaries have
been installed in /usr/opt/networker/bin.
Please update the PATH environment variable to include
/usr/opt/networker/bin.

******************************************************************************

Configuring "Legato Networker Basic Client" (LGTOCLNT600) on member1
```

Sample Output

```
Legato Networker Basic Client

Copyright (c) 1990-2000, Legato Systems, Inc.
mkdir: cannot create /usr/opt/networker/bin/C.
/usr/opt/networker/bin/C: File exists

************ File Configuration on NetWorker Client ***********


The installation procedure adds entries to the /etc/rpc and
/etc/syslog.conf files on the NetWorker server; the original
files are renamed and saved. The installation also creates
the /sbin/init.d/NSRstartstop file.

Do you wish to continue? (y/n) [ y ]: Modifying /etc/rpc
/etc/rpc already modified for NetWorker
Modifying /etc/syslog.conf
/cluster/members/{memb}/etc/syslog.conf already modified for NetWorker
Do you wish to remove the saved files? (y/n) [ n ]:
The modified files were saved and

                                renamed as follows:

File                 Location of saved file
----                 ----------------------
/etc/rpc            /etc/rpc_nsrsave
/etc/syslog.conf   /etc/syslog.conf_nsrsave

Creating /sbin/init.d/NSRstartstop

Starting nsrexecd...

 The nsr/res/servers file will need to be updated with
 the list of servers that will back up this system as
 as a client.
 This is also needed if this machine is to be used
 as an HSM client.

/nsr/res/servers contains the following list of NetWorker servers:

atlasD0

Do you wish to add servers to the /nsr/res/servers file? (y/n):No changes will be
made to the /nsr/res/servers file.


LGTOCLNT600 software installed successfully

The Legato NetWorker Client version 600 binaries have been installed in
/usr/opt/networker/bin.  Please update the PATH environment
variable to include /usr/opt/networker/bin.
```

```
*******************************************************************************

Configuring "Legato Networker Driver & Storage Node" (LGTONODE600) on member1

Legato Networker Driver & Storage Node

Copyright (c) 1990-2000, Legato Systems, Inc.
Starting nsrexecd...


LGTONODE600 software installed successfully

The Legato NetWorker Storage Node version 600 binaries have been installed
in /usr/opt/networker/bin. Please update the PATH environment
variable to include /usr/opt/networker/bin.

*******************************************************************************

Configuring "Legato Networker Manpages" (LGTOMAN600) on member1

Legato Networker Manpages
Copyright (c) 1990-2000, Legato Systems, Inc.
LGTOMAN600 software installed successfully

The Manpages are installed in the following locations:

 /usr/opt/networker/man/man3
 /usr/opt/networker/man/man5
 /usr/opt/networker/man/man8

Please update the MANPATH environment variable to include the path
/usr/opt/networker/man.

*******************************************************************************

Configuring "Legato Networker Server" (LGTOSERV600) on member1

Legato Networker Server

Copyright (c) 1990-2000, Legato Systems, Inc.

************ File Configuration on NetWorker Server ***********

starting nsrd...

LGTOSERV600 software installed successfully

The Legato NetWorker Server version 600 binaries have
been installed in /usr/opt/networker/bin.
Please update the PATH environment variable to include
/usr/opt/networker/bin.
```

Sample Output

```
*******************************************************************************

Configuring "Legato Networker Basic Client" (LGTOCLNT600) on member2

Legato Networker Basic Client

Copyright (c) 1990-2000, Legato Systems, Inc.
mkdir: cannot create /usr/opt/networker/bin/C.
/usr/opt/networker/bin/C: File exists

************ File Configuration on NetWorker Client ***********


The installation procedure adds entries to the /etc/rpc and
/etc/syslog.conf files on the NetWorker server; the original
files are renamed and saved. The installation also creates
the /sbin/init.d/NSRstartstop file.

Do you wish to continue? (y/n) [ y ]: Modifying /etc/rpc
/etc/rpc already modified for NetWorker
Modifying /etc/syslog.conf
* * * Restarting syslog daemon * * *
Do you wish to remove the saved files? (y/n) [ n ]:
The modified files were saved and

                                renamed as follows:

File                 Location of saved file
----                 ----------------------
/etc/rpc            /etc/rpc_nsrsave
/etc/syslog.conf   /etc/syslog.conf_nsrsave

Creating /sbin/init.d/NSRstartstop

Starting nsrexecd...

 The nsr/res/servers file will need to be updated with
 the list of servers that will back up this system as
 as a client.
 This is also needed if this machine is to be used
 as an HSM client.

/nsr/res/servers contains the following list of NetWorker servers:

atlasD0

Do you wish to add servers to the /nsr/res/servers file? (y/n):No changes will be
made to the /nsr/res/servers file.


LGTOCLNT600 software installed successfully

The Legato NetWorker Client version 600 binaries have been installed in
```

```
/usr/opt/networker/bin.  Please update the PATH environment
variable to include /usr/opt/networker/bin.


*******************************************************************************

Configuring "Legato Networker Driver & Storage Node" (LGTONODE600) on member2

Legato Networker Driver & Storage Node

Copyright (c) 1990-2000, Legato Systems, Inc.
Starting nsrexecd...


LGTONODE600 software installed successfully

The Legato NetWorker Storage Node version 600 binaries have been installed
in /usr/opt/networker/bin. Please update the PATH environment
variable to include /usr/opt/networker/bin.

*******************************************************************************

Configuring "Legato Networker Manpages" (LGTOMAN600) on member2

Legato Networker Manpages
Copyright (c) 1990-2000, Legato Systems, Inc.
LGTOMAN600 software installed successfully

The Manpages are installed in the following locations:

 /usr/opt/networker/man/man3
 /usr/opt/networker/man/man5
 /usr/opt/networker/man/man8

Please update the MANPATH environment variable to include the path
/usr/opt/networker/man.

*******************************************************************************

Configuring "Legato Networker Server" (LGTOSERV600) on member2

Legato Networker Server

Copyright (c) 1990-2000, Legato Systems, Inc.

************ File Configuration on NetWorker Server ***********

starting nsrd...

LGTOSERV600 software installed successfully

The Legato NetWorker Server version 600 binaries have
been installed in /usr/opt/networker/bin.
```

Sample Output

```
Please update the PATH environment variable to include
/usr/opt/networker/bin.

atlas0 # /usr/opt/networker/bin/networker.cluster
------------------------------------------------------------------
TruCluster is a high availability product for Tru64 Unix.
It defines failover applications which may move from one node to
another, depending on the availability and health of the machine
it is running upon.
The Networker Client and Networker Server have the default cluster
identity.
------------------------------------------------------------------
Do you wish to continue? [Yes]?
Shutting down NetWorker services...
Restarting syslog daemon...
/cluster/members/{memb}/etc/syslog.conf already modified for NetWorker
Restarting syslog daemon...

NetWorker has been successfully cluster configured.
atlas0 # exit

Script done on Tue Aug  6 10:45:02 2002
```

I

Configuring DNS Servers

This appendix describes how to set up a management server as a DNS server and contains the following sections:

- Management Server as DNS Server and Cluster as Client (see Section I.1 on page I–2)
- Management Server as Master DNS Server and Cluster as Slave DNS Server (see Section I.2 on page I–5)
- Other Configurations (see Section I.3 on page I–8)

I.1 Management Server as DNS Server and Cluster as Client

I.1.1 On the Management Server

Note:

This step should be performed before you run `sra setup`, and so should replace the procedure described in Section 5.1.5.3 and Section 6.1.4.3.

To configure the management server as the DNS server, and the cluster as the client, perform the following steps:

1. Log on to the management server as `root`.
2. Run the following command:

   ```
   atlasms# sysman dns
   ```

   or within Sysman, select the option, *Networking, Additional Network Services, Domain Name Service (DNS/BIND)*.
3. Configure the system as a DNS server.
4. Enter a local domain name (`mydomain.net`).
5. Enter the *DNS server type* = `Master` (assume you are not using slave or any other types).
6. Enter the default Hostname Resolution order. Select the default entries: `Local Host file`, `DNS database`, `NIS`.
7. Select the *Additional/Advanced* options, and select the default input (for example, location of configuration files).
8. Select the *OK/Next screen* option.
9. Add a name server, and select the hostname (unqualified) of the management server.
10. Allow Sysman to resolve the IP address and confirm that it is correct (check that the address is the `10.128.XXX.XXX` address of the management server).
11. Select the *OK/Next screen* option.
12. When prompted to create the DNS database from the `/etc/hosts` file, enter **`Yes`** (or select the checkbox).
13. When prompted to change the hostname, enter **`No`** (to avoid confusing the `rmshost` settings).
14. When prompted, select the option to *Start/Restart* the `named` daemon.

15. To check that the DNS is working, run `nslookup` to confirm the resolution of hostnames defined in the `/etc/hosts` file.
16. Confirm that the Name Server address and name is correct.
17. If you wish to add addresses to `nslookup`, do the following:
    a. Copy the hosts file to the DNS source directory as follows:

       ```
       atlasms# cp /etc/hosts /etc/namedb/src/
       ```

    b. Edit this copy of hosts: `/etc/namedb/src/hosts` and make the appropriate additions/deletions.
    c. Run the makefile to update the DNS database as follows:

       ```
       atlasms# /etc/namedb/make all
       ```

       This command takes this copy of the hosts file, rebuilds the DNS database, and restarts the `named` daemon (DNS server).

    This procedure assumes that clients only need to know about addresses in their own domain and are not concerned with external domains. Other configurations are described in Section I.1.2.

I.1.2 On the Cluster

Perform the following steps after the cluster has been successfully installed and booted:

Note:

In this case, the hosts file contains all entries for all nodes and their networks (for example, `atlas24-ext`, `atlas24-eip`, `atlas24-ics` and so on). The entries are added to the DNS database.

1. Log on to any node in the cluster (typically the master node `atlas0`) as `root`.
2. Run the following command:

   ```
   atlas0# sysman dns
   ```

   or within Sysman select the option, *Networking, Additional Network Services, Domain Name Service (DNS/BIND)*.
3. Configure the system as a DNS client.
4. On the local domain, select the domain name (`mydomain.net`).
5. Confirm that the IP address is correct.
6. Enter the Hostname Resolution Order. Select the default entries: `Local Host file`, `DNS database`, `NIS`.

7. Select the *Additional/Advanced* options, and select the Domains searched. Select the default options (none).
8. Select the *OK/Next screen* option.

   A message is displayed that DNS is configured on the machine.
9. To check that the DNS is working, run `nslookup` to confirm the resolution of hostnames defined in the `/etc/hosts` file.
10. Confirm that the Name Server address and name is correct.

I.2 Management Server as Master DNS Server and Cluster as Slave DNS Server

I.2.1 On the Management Server

Note:

This step should be performed before you run `sra setup`, and so should replace the procedure described in Section 5.1.5.3 and Section 6.1.4.3.

To configure the management server as a master DNS server, refer to the steps in Section I.1.1. To configure the cluster as a slave DNS server refer to the steps in Section I.2.2.

I.2.2 On the Cluster

1. Log on to any node in the cluster (typically the master node `atlas0`) as `root`.
2. Run the following command:

   ```
   atlas0# sysman dns
   ```

   or within Sysman select the option, *Networking, Additional Network Services, Domain Name Service (DNS/BIND).*
3. Configure the system as a DNS server
4. Enter a local domain name (`mydomain.net`).
5. Enter the *DNS server type* = `Slave`.
6. Enter the default Hostname Resolution order. Select the default entries: `Local Host file`, `DNS database`, `NIS`.
7. Select the *Additional/Advanced* options, and select the default input (for example, location of configuration files).
8. Select the *OK/Next screen* option.
9. On the *Zones Served* screen, the first entry (`0.0.127.in-addr.arpa`) is displayed by default. Do not change or remove this entry. Perform the following steps:
   a. Select the *Add* option, to display the next screen.
   b. Select the *Slave* option.
   c. Enter the domain identifier for this zone

Note:

This is only different from the domain entered in step 4 above if you intend for different slaves to operate for different zones within the domain. In the simplest case, you will not have multiple zones or slaves, so this will be the local domain entered in step 4.

d. Enter the file name `hosts.slave.db` (effectively the slave copy of the DNS database)

e. Enter the IP address of the Master DNS Server (in this example, the IP address of the Management Server, that was set up in Section I.1)

10. Repeat steps a to e above specifying the domain identifier as follows: '`nnn.nnn.nnn.inaddr.arpa`', where '`nnn.nnn.nnn`' is the reverse IP address of the Master DNS Server.

Note

If the Master IP address is 16.123.456.789, this entry will be for `456.123.16.in-addr.arpa` thereby defining reverse lookups for all IP addresses in that range. The file name in this case will be `hosts.slave.rev` (that is, the reverse lookup file for the DNS database). The IP address will be the IP address of the Master DNS server.

11. Add any more zones being served by this slave (if appropriate) in the same manner.
12. Select the *OK/Next screen* option.
13. Add a name server. Specify the hostname and IP address of the Master DNS server (as setup in Section I.1)
14. Select the *OK/Next screen* option.
15. When prompted, select the option to *Start/Restart* the `named` daemon. Click the checkbox and select the *Next* option.
16. When prompted to change the hostname, enter **`No`** (to avoid confusing the `rmshost` settings).
17. Select the *Finish* option to complete the setup.

I.2.3 Test the Slave DNS Server

To test that the slave DNS server is working:

1. Verify that the `named` daemon has been started on the slave server. If this is a cluster (management server cluster or standard SC cluster), the `named` daemon is started as a `caa_application`, so use `caa_stat` to check the status.
2. Check that the `hosts.slave.db` and `hosts.slave.rev` database files have been transferred successfully over from the master DNS server. The files should reside in the location: `/etc/namedb/` on the slave server. On a cluster, log on to the cluster alias to check the file location.
3. Run `nslookup` on the slave server (in this case any node in the cluster) and check that all hosts defined in the master database can be resolved.
4. On the Master DNS server (in this case the management server), add another host entry into the `/etc/namedb/src/hosts` file, and rebuild the DNS database as follows:

   ```
   atlasms# /etc/namedb/make all
   ```

   Refer to step 17 in Section I.1.1 above for more explanation.
5. Stop and restart the `named` daemon on the master (use the `caa_stop` or `caa_start` commands if on a cluster).
6. On the slave server, run the `nslookup` command and resolve one of the new names added to the server's DNS database.

I.3 Other Configurations

The management server can be also set up as a slave DNS server, with the cluster(s) as DNS clients, by following the steps in Section I.2.

J

Configuring MSA1000

This appendix provides information on configuring MSA1000 and contains the following sections:

- Preparing to Upgrade the MSA1000 Firmware (see Section J.1 on page J–2)
- Upgrading MSA1000 Firmware (see Section J.2 on page J–3)
- MSA1000 Sample Configuration (see Section J.3 on page J–7)

J.1 Preparing to Upgrade the MSA1000 Firmware

For qualification reasons, the MSA1000 controller firmware needs to be upgraded to at least the recommended revision before the storage is actually used by the Tru64 systems.

The process of upgrading the MSA1000 firmware requires a single Tru64 node with a fibre channel connection to the MSA1000. If the management server has such a fibre channel connection, then the upgrade can be performed using the management server while it is booted from CD-ROM.

If the management server does not have a fibre channel connection, then the first node of the first domain can be used to perform the upgrade. However, it will be necessary to install the domain(s) in two phases so that the MSA1000 controller firmware can be upgraded prior to the MSA1000 storage itself being used by the `clu_create` phase. The sequence in such a situation is as follows:

1. Follow the steps to install when the system has a management server as described in Chapter 5.
2. Begin the installation of the domains as described in Create the Domains (see Section 7.4 on page –23), but halt the installation process at the `NHD_Installed` state as follows:

   ```
   atlasms# sra install -domains all -unixpatch /patches/patch_kit -sckit
   /cdrom/kits -sysconfig /cdrom/Examples/sysconfigtab -endstate
   NHD_Installed
   ```

3. Upgrade the MSA1000 controller firmware from the `atlas0` node as described in Upgrading MSA1000 Firmware (see Section J.2 on page J–3)
4. Configure the MSA1000 RAID Controllers as described in Configure the MSA1000 RAID Storage (see Section 3.17.2 on page –61)
5. At this point, the normal installation process should be resumed beginning with the following command:

   ```
   atlasms# sra install -domains all -unixpatch /patches/patch_kit -sckit
   /cdrom/kits -sysconfig /cdrom/Examples/sysconfigtab
   ```

   Where this command will continue from the endstate defined in the earlier command. The remainder of the system installation will now proceed as documented in Chapter 7.

J.2 Upgrading MSA1000 Firmware

Assuming that `atlas0` is booted to a UNIX prompt, then to upgrade the MSA1000 controller firmware, you should perform the following steps.

1. Verify the current MSA1000 controller firmware, by running the following command from the MSA1000 command line interface:

```
CLI> show this_controller
Controller:
MSA1000(c) Compaq P56350D9IOS07O Software 2.38 Build 122 Hardware 7
Controller Identifier:
NODE_ID = 500805F3-000751E0
SCSI_VERSION = SCSI-3
Supported Redundancy Mode: Active/Standby
Current Redundancy Mode: Active/Standby
Current Role: Active
Device Port SCSI address 6
Host Port_1:
REPORTED PORT_ID 500805F3-000751E1
PORT_1_TOPOLOGY = F_Port
Cache:
Unconfigured Version 2
Cache is GOOD, but Cache is NOT configured.
No unflushed data in cache
Battery:
Module #1 is fully charged and turned on.
CLI>
```

   Table 3–5 lists the supported firmware versions. If the controller firmware version is lower than the recommended version then you should upgrade the MSA1000 firmware as follows:

2. Download the MSA1000 firmware zip file from the following location:

   `<http://h18006.www1.hp.com/products/storageworks/softwaredrivers/msa1000/index.html>`

3. Create a directory on the management server as follows:

```
atlas0# mkdir /usr/kits/msa1000-fw
```

4. Extract to the new directory the following files: `MSAv330A.bin` and `Tru64InstallNotes.txt`

5. Follow the `Tru64InstallNotes.txt` file for the most up to date steps required to upgrade the firmware. However, an example of the steps required to upgrade the MSA1000 firmware is shown in Example J–1.

Example J–1 Upgrading MSA1000 Firmware - Sample Output

```
CLI> show this_controller
Controller:
MSA1000(c) Compaq P56350D9IOS07O Software 2.38 Build 122 Hardware 7
Controller Identifier:
NODE_ID = 500805F3-000751E0
SCSI_VERSION = SCSI-3
Supported Redundancy Mode: Active/Standby
Current Redundancy Mode: Active/Standby
Current Role: Active
Device Port SCSI address 6
Host Port_1:
REPORTED PORT_ID 500805F3-000751E1
PORT_1_TOPOLOGY = F_Port
Cache:
Unconfigured Version 2
Cache is GOOD, but Cache is NOT configured.
No unflushed data in cache
Battery:
Module #1 is fully charged and turned off.
CLI>
```

Identify the bus/target/lun identification for the MSA1000 to upgrade as follows:

```
atlas0# /sbin/hwmgr view device | grep MSA1000 | grep -v VOLUME
81: /dev/cport/scp0 MSA1000 bus-4-targ-0-lun-0

atlas0# /sbin/hwmgr show scsi -full -id 81
SCSI DEVICE DEVICE DRIVER NUM DEVICE FIRST
HWID: DEVICEID HOSTNAME TYPE SUBTYPE OWNER PATH FILE VALID PATH
------------------------------------------------------------------------
81: 4 scmsa0 raid none 0 2 scp0 [4/0/0]
WWID:02000008:5008-05f3-0007-51e0
BUS TARGET LUN PATH STATE
--------------------------------
4 0 0 valid
5 0 0 valid
```

Launch the SCSI CAM Utility program to upgrade the MSA controller firmware as follows:

```
atlas0# /sbin/scu
scu> sbtl 4 0 0

Device: MSA1000, Bus: 4, Target: 0, Lun: 0, Type: Array Controller
scu> tur
scu> download MSAv330A.bin save segment
Downloading File 'MSAv330A.bin' of 1048576 bytes in 8192 byte segments...
Download completed successfully, now saving the microcode...
Delaying for 120 seconds while firmware is saved, please be patient... 100
.
Delaying for 120 seconds while firmware is saved, please be patient... 85
.
scu> exit
```

```
atlas0#
```

At this point, the MSA1000 command line interface will display the following message:

```
CLI>
WRITE_BUFFER SUCCESS: Successfully Validated MSA1000 FW Image!
Flashing MSA1000 Firwmare...done
Powercycle to activate new MSA1000 FW!
```

You should now perform the following additional steps to upgrade the left controller:

1. Powercycle the right controller and wait for the boot sequence to complete
2. Plug in the left controller
3. Clone the left controller firmware by using the front panel arrows on the MSA1000 left controller.
4. Verify the updated firmware MSA1000 controller firmware, by running the following commands from the MSA1000 command line interface:

```
CLI> show this_controller
Controller:
MSA1000(c) Compaq P56350D9IOS07O Software 3.30 Build 211 Hardware 7
Controller Identifier:
NODE_ID = 500805F3-000751E0
SCSI_VERSION = SCSI-3
Supported Redundancy Mode: Active/Standby
Current Redundancy Mode: Active/Standby
Current Role: Active
Device Port SCSI address 6
Host Port_1:
REPORTED PORT_ID 500805F3-000751E1
PORT_1_TOPOLOGY = F_Port
Cache:
Unconfigured Version 2
Cache is GOOD, but Cache is NOT configured.
No unflushed data in cache
Battery:
Module #1 is fully charged and turned off.

CLI> show other_controller
Controller:
MSA1000(c) Compaq P56350D9IOS0KX Software 3.30 Build 211 Hardware 7
Controller Identifier:
NODE_ID = 500805F3-000751E0
SCSI_VERSION = SCSI-3
Supported Redundancy Mode: Active/Standby
Current Redundancy Mode: Active/Standby
Current Role: Standby
Device Port SCSI address 7
Host Port_1:
REPORTED PORT_ID 500805F3-000751E9
PORT_1_TOPOLOGY = F_Port
```

```
Cache:
Unconfigured Version 2
Cache is GOOD, but Cache is NOT configured.
No unflushed data in cache
Battery:
Module #1 is fully charged and turned off.
CLI>
```

J.3 MSA1000 Sample Configuration

Example J–2 displays a sample flow and output when configuring MSA1000.

Example J–2 Sample MSA1000 Configuration

```
CLI> show connections
Global_ris doesn't exist.  No named connections exist.

Connection Name: <Unknown>
   Host WWNN = 20000000-C9311D90
   Host WWPN = 10000000-C9311D90
   Profile Name = Default
   Unit Offset = 0
   Controller 2 Port 1 Status = Online

Connection Name: <Unknown>
   Host WWNN = 20000000-C9311CD6
   Host WWPN = 10000000-C9311CD6
   Profile Name = Default
   Unit Offset = 0
   Controller 1 Port 1 Status = Online

CLI>
```

The message `Global_ris doesn't exist. No named connections exist` shown above is displayed when there is no storage unit created. Creating storage units is the first action to perform on MSA1000 configuration, otherwise all commands would fail, as can be seen for the `add connection` command below:

```
CLI> add connection N0000-0  Host WWPN = 10000000-C9311CD6 profile=Tru64 offset=0
Cannot save any connection information because global_ris is NULL.

CLI> show disks
Disk List: (box,bay) (bus,ID)     Size     Units
 Disk101     (1,01)    (0,00)     36.4GB    none
 Disk102     (1,02)    (0,01)     36.4GB    none
 Disk103     (1,03)    (0,02)     36.4GB    none
 Disk104     (1,04)    (0,03)     36.4GB    none
 Disk105     (1,05)    (0,04)     36.4GB    none
 Disk108     (1,08)    (1,00)     36.4GB    none
 Disk109     (1,09)    (1,01)     36.4GB    none
 Disk110     (1,10)    (1,02)     36.4GB    none
 Disk111     (1,11)    (1,03)     36.4GB    none
 Disk112     (1,12)    (1,04)     36.4GB    none
 Disk114     (1,14)    (1,08)     36.4GB    none
 Disk201     (2,01)    (2,00)     36.4GB    none
 Disk202     (2,02)    (2,01)     36.4GB    none
 Disk203     (2,03)    (2,02)     36.4GB    none
 Disk204     (2,04)    (2,03)     36.4GB    none
```

```
 Disk205     (2,05)    (2,04)     36.4GB    none
 Disk208     (2,08)    (3,00)     36.4GB    none
 Disk209     (2,09)    (3,01)     36.4GB    none
 Disk210     (2,10)    (3,02)     36.4GB    none
 Disk211     (2,11)    (3,03)     36.4GB    none
 Disk212     (2,12)    (3,04)     36.4GB    none


CLI> add unit 1 RAID_level=1 data="disk101 disk201" size=16GB spare="disk114"
First volume to be configured on these drives.
The logical unit size has been adjusted by  6MB for optimal performance.
Logical Unit size                =   16378 MB
RAID overhead                    =   16378 MB
Total space occupied by new unit  =   32756 MB
Free space left on this volume:   =   36696 MB
Unit 1 is created successfully.

CLI> add unit 2 RAID_level=1 data="disk101 disk201" size=1500MB spare="disk114"
The logical unit size has been adjusted by  2MB for optimal performance.
Logical Unit size                =    1498 MB
RAID overhead                    =    1498 MB
Total space occupied by new unit  =    2996 MB
Free space left on this volume:   =   33698 MB
Unit 2 is created successfully.

CLI> add unit 3 RAID_level=1 data="disk101 disk201" size=16GB spare="disk114"
The logical unit size has been adjusted by  6MB for optimal performance.
Logical Unit size                =   16378 MB
RAID overhead                    =   16378 MB
Total space occupied by new unit  =   32756 MB
Free space left on this volume:   =     942 MB
Unit 3 is created successfully.

CLI> show disks
Disk List: (box,bay) (bus,ID)     Size     Units
 Disk101     (1,01)    (0,00)     36.4GB    1, 2, 3
 Disk102     (1,02)    (0,01)     36.4GB    none
 Disk103     (1,03)    (0,02)     36.4GB    none
 Disk104     (1,04)    (0,03)     36.4GB    none
 Disk105     (1,05)    (0,04)     36.4GB    none
 Disk108     (1,08)    (1,00)     36.4GB    none
 Disk109     (1,09)    (1,01)     36.4GB    none
 Disk110     (1,10)    (1,02)     36.4GB    none
 Disk111     (1,11)    (1,03)     36.4GB    none
 Disk112     (1,12)    (1,04)     36.4GB    none
 Disk114     (1,14)    (1,08)     36.4GB    1, 2, 3 (spare)
 Disk201     (2,01)    (2,00)     36.4GB    1, 2, 3
 Disk202     (2,02)    (2,01)     36.4GB    none
 Disk203     (2,03)    (2,02)     36.4GB    none
 Disk204     (2,04)    (2,03)     36.4GB    none
 Disk205     (2,05)    (2,04)     36.4GB    none
 Disk208     (2,08)    (3,00)     36.4GB    none
 Disk209     (2,09)    (3,01)     36.4GB    none
```

```
 Disk210     (2,10)    (3,02)     36.4GB    none
 Disk211     (2,11)    (3,03)     36.4GB    none
 Disk212     (2,12)    (3,04)     36.4GB    none

CLI> show connections

Connection Name: <Unknown>
   Host WWNN = 20000000-C9311D90
   Host WWPN = 10000000-C9311D90
   Profile Name = Default
   Unit Offset = 0
   Controller 2 Port 1 Status = Online

Connection Name: <Unknown>
   Host WWNN = 20000000-C9311CD6
   Host WWPN = 10000000-C9311CD6
   Profile Name = Default
   Unit Offset = 0
   Controller 1 Port 1 Status = Online

CLI>

CLI> set unit_id 1 1
Device identifier 1 created.

CLI> set unit_id 2 2
Device identifier 2 created.

CLI> set unit_id 3 3
Device identifier 3 created.

CLI>

CLI> add connection N0000-0 WWPN=10000000-C9311CD6 profile=Tru64 offset=0
Connection has been added successfully.
Profile Tru64 is set for the new connection.

CLI> add connection N0000-1 WWPN=10000000-C9311D90 profile=Tru64 offset=0
Connection has been added successfully.
Profile Tru64 is set for the new connection.

CLI> show connections

Connection Name: N0000-0
   Host WWNN = 20000000-C9311CD6
   Host WWPN = 10000000-C9311CD6
   Profile Name = Tru64
   Unit Offset = 0
   Controller 1 Port 1 Status = Offline


Connection Name: N0000-1
   Host WWNN = 20000000-C9311D90
```

```
Host WWPN = 10000000-C9311D90
Profile Name = Tru64
Unit Offset = 0
Controller 2 Port 1 Status = Offline
```

Index

A

Abbreviations, xxv

AdvFS Domains, 6-43

AlphaServer SC Interconnect, 3-20

AlphaServer SC System Components, 3-4

Audit
  Pre-Upgrade, 4-8

B

Backing Up File Systems, 10-7

BIND
  See DNS/BIND

Boot Disks, 5-40, 6-27, 6-43

Bootstrap-fail Error, 11-3

C

CAA
  See Failover

Cabinets
  Assigning, 5-51, 6-37

Cables
  AlphaServer SC Interconnect, 3-20
  Console Network, 3-21
  Fibre Channel, 3-23, 3-28, 3-60
  Management Network, 3-11

CDSLs, 6-43

Checklist
  See Information Checklists

Cluster Alias
  Default, 2-2
  Overview, 10-12

Cluster Availability, 8-3

Cluster Disk, 6-43

Cluster Member
  Adding Votes, 8-4
  Restricting Access, 10-3

Cluster Naming Scheme, 2-6

Cluster Quorum
  See Cluster Availability

Clustered Management Server
  Installing, 5-22
  Upgrading with, 4-20

Code Examples, xxx

Commands
  caa_register, 11-6
  clu_add_member, E-23
  clu_create, E-20
  clu_quorum, 8-4, E-25
  dhcp, 11-3
  msqladm, 11-14
  rcontrol, 8-10
  rinfo, 8-11
  ris, 4-17, 4-26, 4-33, 5-31, 6-19
  setld, 5-24, 5-33, 6-21
  sra add_member, F-9
  sra boot, 8-5, 8-6
  sra edit, 5-43, 6-31, 7-14, 7-15, 7-19
  sra install, 7-2, 7-24
  sra power_off, 11-8
  sra power_on, 11-8
  sra setup, 11-11, E-2

sra shutdown, 8-5
sramon, 7-13
Console Network, 3-21, 10-9
Console Variables
See SRM Console
CS Domain, 2-4

D

Daemons
CAA, 11-6
Console Logger (cmfd), 11-12
Installation, 7-2
joind, 11-3
portmap, 11-6
Database, Dropping and Rebuilding, 11-14
Default Cluster Alias, 2-2
Disk
Labels, 6-43
Layout, 2-8
DNS (BIND), 5-17, 6-14
DNS Server
Configuring, I-1, J-1
Documentation
Conventions, xxvii
Online, xxx
Domain, 2-4
Domains, xxix
Creating, 7-23
Upgrade Mechanism, 4-5
Upgrading, 4-37
Dual-Rail
Configuring Hardware, 3-20

E

Elan Error, 11-8
Example MPI Program, 8-16
Examples
Code, xxx

F

Failover
RMS, 8-11
Fibre Channel, 3-23
Fibre Channel Switch, 2-17
Files
Preserved and Unpreserved, 4-4
Fortran Run-Time Libraries, 5-33, 6-21
FS Domain, 2-4

G

Gateway
Default, 5-15, 6-13
External, 2-17

H

Hardware Ethernet (MAC) Address, 6-29
Host Name, 5-7, 6-5
Hosts File, 5-15, 6-13

I

Information Checklists, D-1
Installation Checklists, C-1
Installation Overview, 1-2
Installation State
Monitoring, 7-4
IP Addresses
AlphaServer SC Interconnect, 5-38, 6-25
Alternative Notation, G-1
External Gateway, 2-17
External Network, 2-2
Management Network, 5-15, 5-16, 6-13
Table of, G-1
Terminal Server, 3-22

K

Kernel

Build, 5-9, 6-7, 6-43
Variables, 6-22

L

Ladebug Debugger, 5-13, 6-11

Layered Products, 5-33, 6-21

License
PAKs, 5-10, 5-33, 6-8, 6-21
Requirements, 1-3

LSF
Configuring, 9-13
Installing in NFS System Environment, 9-3
Overview, 9-2
Upgrading from Version 2.5, 9-9

LSM, 5-8, 6-6, 8-18

M

Mail Configuration, 5-21, 6-17

Management Network, 3-12, 3-14

Management Server
Clustered, 3-3
Standalone, 3-2
Upgrading with, 4-10
Upgrading without, 4-29

Manual Cluster Creation, 11-12

Multiple-Bus Failover Mode, 3-30

N

Network
External, 2-2, 8-2
Setup, 5-14, 6-12, 8-2
Speed, 11-3

Network Adapter, xxix

Networker
Configuring, H-1

New and Changed Features, xxi

NFS (Network File System), 11-6

NIS (Network Information System), 5-19, 6-16

Node Boot Error, 11-8

Nodes
Checking, 5-44, 6-31

NTP (Network Time Protocol), 5-18, 6-15

P

PAK
See License

Powercycle, 11-7

Printer Configuration, 5-21, 6-18

Q

Quorum
See Cluster Availability

R

RAID, 3-29

Reset Button, 11-12

RIS (Remote Installation Services), 5-31, 6-19, 11-5, 11-6

RMS (Resource Management System)
Database, 8-10
Mandatory Administration Tasks, 10-13
Optional Administration Tasks, 10-13
Partitions, 8-10, 8-11
rmshost, 5-34, 6-23
Starting Manually, C-8

Root Password, 2-17, 5-7, 6-6

S

SANworks Command Scripter, 2-16

SC Database Setup, 5-36, 6-24

SC Monitor
Setting Up, 5-48, 6-35

SRM Console, 3-11, 5-3, 5-6, 5-42, 6-3, 6-4, 6-29

SRM Device Name, 5-41, 6-28

States
Checking Upgrade, 4-4
Upgrade, 4-3

Storage
Global, 10-10
Local, 10-10
System, 3-27, 10-10
Subnet mask, 2-4
Subsets, 1-4
Summit Switch, 3-11
Swap Mode, 8-18
Swap Space, 2-10, 5-40, 6-27
Switch Zoning, 3-26
sysconfigtab Parameters, 6-22, 7-23
System Name, 2-2
System Storage
Configuring, 3-27

T

Terminal Server, 3-22, 11-12
Troubleshooting, 11-1
Tru64 UNIX Operating System Software, 5-6, 6-4, 7-23

U

Upgrade
Files Preserved and Unpreserved, 4-4
Overview of Procedure, 4-2
Post Upgrade Tasks, 4-45
Pre-check, 4-8
Restarting, 4-3
Time Estimates, 4-7
Upgrade Failure
Recovery, 4-41
Upgrade Mechanisms, 4-5
Upgrade Paths, 4-2
Upgrade Process
Described, 4-2
Upgrade States, 4-3
Upgrading
Domains, 4-37
LSF for Version 2.5, 9-9
User Administration, 10-11

V

Votes
See Cluster Availability