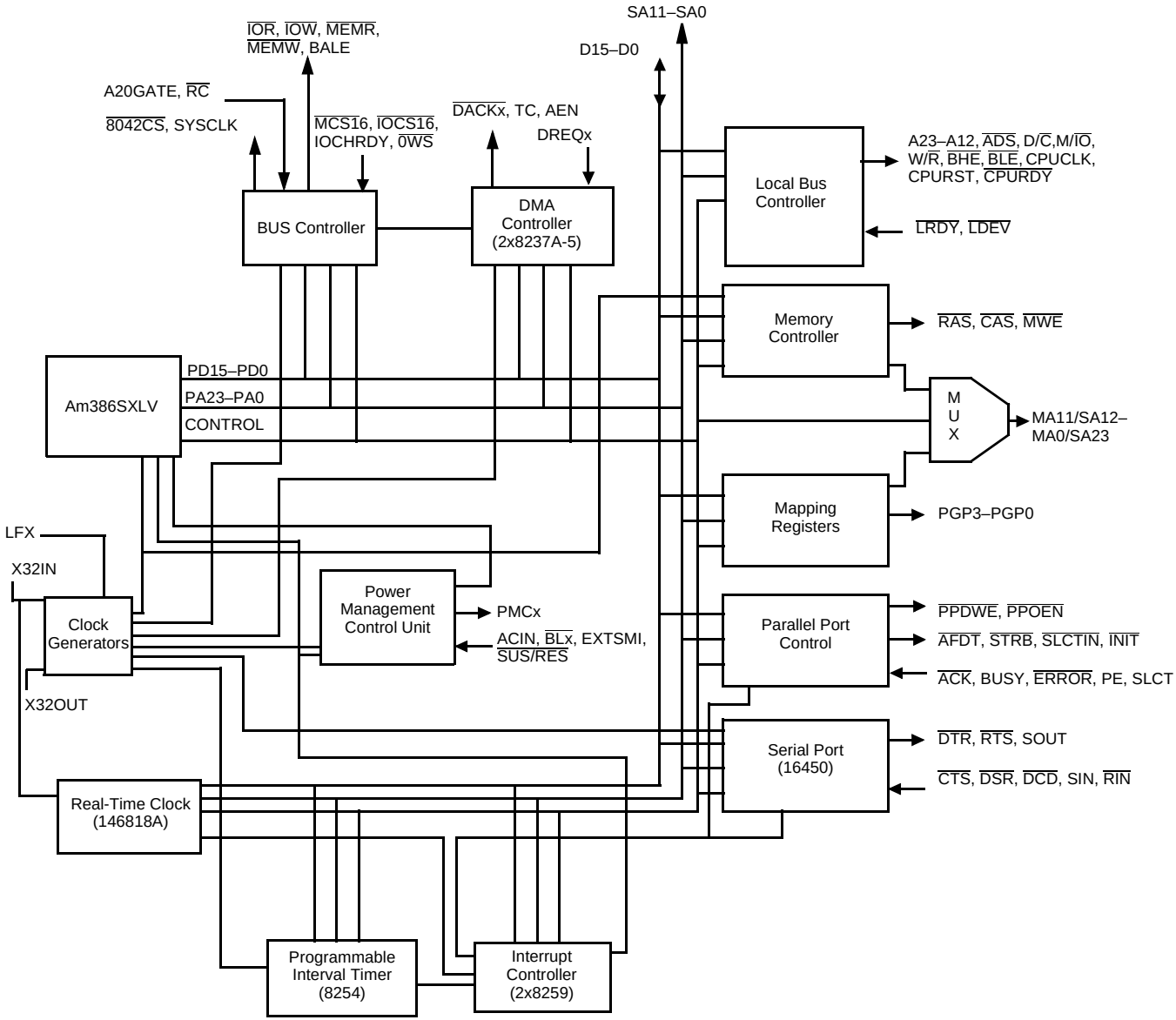ÉlanSC310 MICROCONTROLLER BLOCK DIAGRAM