Low Voltage Power Supply Circuits

Advanced Micro Devices

Application Note

Am486® 3.3-V CPUs and Am5$_X$86™ CPUs feature a 5-V tolerant signal interface, but require a +3.3-V input for V_{CC}. For cost effectiveness, AMD® recommends the use of a voltage regulator circuit to generate the V_{CC} input from a regulated +5-V source. This application note describes two such circuits that provide a programmable voltage range (3.3 V–3.6 V). The note also includes filtering and routing guidelines for incorporating these circuits into a motherboard design.

BACKGROUND

The CS-24 (0.5 micron) and CS-34 (0.35 micron) manufacturing processes incorporate 5-V I/O tolerance. This means that 3.3-V Am486 processors (0.5 micron) and Am5$_X$86 processors (0.35 micron) can accept both 3.3-V and 5-V input signals even though they require 3.3-V input power. The input circuit protects the microprocessor from potential damage caused by the application of 5-V signals.

AMD has developed two circuit designs that can generate a selectable input voltage range (3.3 V–3.6 V) for the microprocessor V_{CC} source. The linear regulator circuit is the lower cost solution. The second option is a switching regulator that provides a higher efficiency output, but at a significant cost increase. Design requirements (higher efficiency vs. lower cost) determine which power solution to use in a specific system design.

A second basic issue in power supply circuit design is noise reduction. Excessive noise levels can impair proper operation and contribute to possible radio frequency transmissions that can affect compliance with national and international agency regulations. This application note provides some basic guidelines for reducing noise generated by or transmitted through the power supply circuits.

LINEAR REGULATOR POWER CIRCUIT

The lower cost linear regulator power circuit is shown in Figure 1. The circuit provides an output of +5 V or 3.3 V–3.6 V depending on the state of the VOLDET input from the microprocessor. On AMD processors manufactured using the CS-24 or CS-34 process, the VOLDET signal is set to the V_{SS} level used by the microprocessor. The actual output range produced by the regulator circuit depends on the ratio of the values of R1 and R2. Table 1 shows the recommended resistor sizes used to produce specific voltage outputs (V_{OUT}).

Figure 1 Variable Linear Regulator Microprocessor Power Supply Circuit

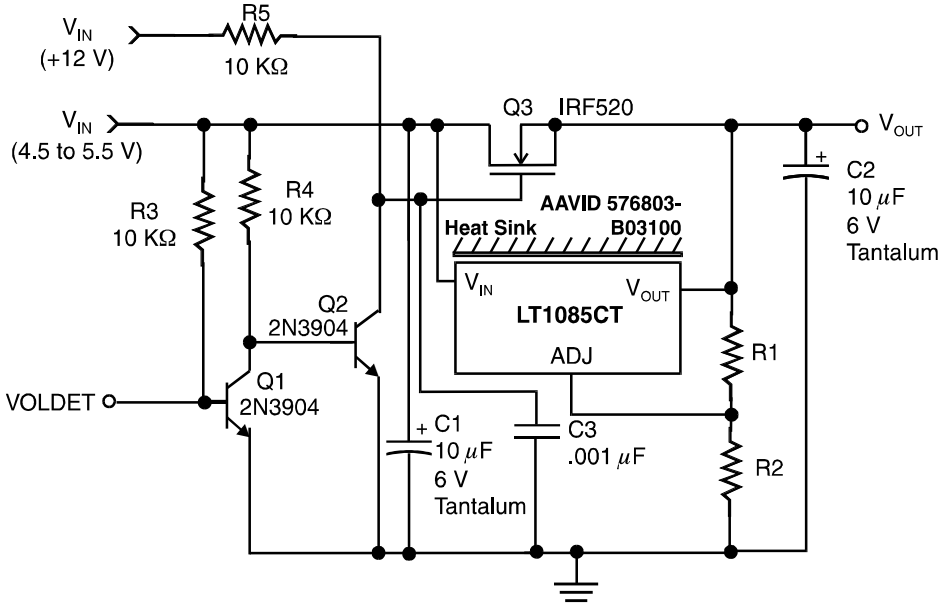

Table 1. R1 and R2 Resistor Values

V_{OUT}	R1	R2
3.3 V	124 Ω	205 Ω
3.45 V	124 Ω	218 Ω
3.6 V	124 Ω	234 Ω

Note: *All resistors are 1% tolerance.*

This document contains information on a product under development at Advanced Micro Devices. The information is intended to help you evaluate this product. AMD reserves the right to change or discontinue work on this proposed product without notice.

Document #: **19197** Rev. **D** Amendment/**0**
Issue Date: **August 1995**